TOYOTA

REPAIR MANUAL FOR CHASSIS & BODY

CELICA

AT200 series
ST20_ series

Oct., 1993

Pub. No. RM380E

Downloaded from www.Manualslib.com manuals search engine

FOREWORD

This repair manual has been prepared to provide information covering general service repairs for the chassis and body of the TOYOTA CELICA.

Applicable models: AT200 series
ST202, 204 series

For the service specifications and repair procedure of the above model other than those listed in this manual, refer to the following manuals.

Manual Name	Pub. No.
• 7A-FE Engine Repair Manual	RM325E
• 3S-FE Engine Repair Manual	RM395E
• 3S-GE Engine Repair Manual	RM396E
• 3S-GE, 3S-GTE, 5S-FE Engine Repair Manual	RM164E
• 5S-FE Engine Repair Manual Supplement	RM267E
• A140E Automatic Transaxle Repair Manual	RM248E
• Celica Electrical Wiring Diagram	EWD198Y
• Celica New Car Features	NCF103E

All information in this manual is based on the latest product information at the time of publication. However, specifications and procedures are subject to change without notice.

TOYOTA MOTOR CORPORATION

© 1995 **TOYOTA MOTOR CORPORATION**
All rights reserved. This book may not be reproduced or copied, in whole or in part, without the written permission of Toyota Motor Corporation.

Downloaded from www.Manualslib.com manuals search engine

INTRODUCTION IN
CLUTCH CL
C52 MANUAL TRANSAXLE MX
S54 MANUAL TRANSAXLE MX
E56 MANUAL TRANSAXLE MX
AUTOMATIC TRANSAXLE AX
SUSPENSION AND AXLE SA
BRAKE SYSTEM BR
STEERING SR
SUPPLEMENTAL RESTRAINT SYSTEM RS
BODY ELECTRICAL SYSTEM BE
BODY BO
AIR CONDITIONING SYSTEM AC
ELECTRICAL WIRING DIAGRAMS EWD

Downloaded from www.Manualslib.com manuals search engine

INTRODUCTION

HOW TO USE THIS MANUAL ..... IN– 2
IDENTIFICATION INFORMATION ..... IN– 5
GENERAL REPAIR INSTRUCTIONS ..... IN– 6
PRECAUTION ..... IN– 10
VEHICLE LIFT AND SUPPORT LOCATIONS ..... IN– 12
ABBREVIATIONS USED IN THIS MANUAL ..... IN– 13
STANDARD BOLT TORQUE SPECIFICATIONS ..... IN– 14

Downloaded from www.Manualslib.com manuals search engine

HOW TO USE THIS MANUAL

IN02E-01

INDEX

An INDEX is provided on the first page of each section to guide you to the item to be repaired. To assist you in finding your way through the manual, the Section Title and major heading are given at the top of every page.

IN

IN02G-01

GENERAL DESCRIPTION

At the beginning of each section, a General Description is given that pertains to all repair operations contained in that section.
Read these precautions before starting any repair task.

IN02H-09

TROUBLESHOOTING

TROUBLESHOOTING tables are included for each system to help you diagnose the problem and find the cause. Be sure to read this before performing troubleshooting.

IN02J-01

PREPARATION

Preparation lists the SST (Special Service Tools), recommended tools, equipment, lubricant and SSM (Special Service Materials) which should be prepared before beginning the operation and explains the purpose of each one.

IN02K-01

REPAIR PROCEDURES

Most repair operations begin with an overview illustration. It identifies the components and shows how the parts fit together.
Example:

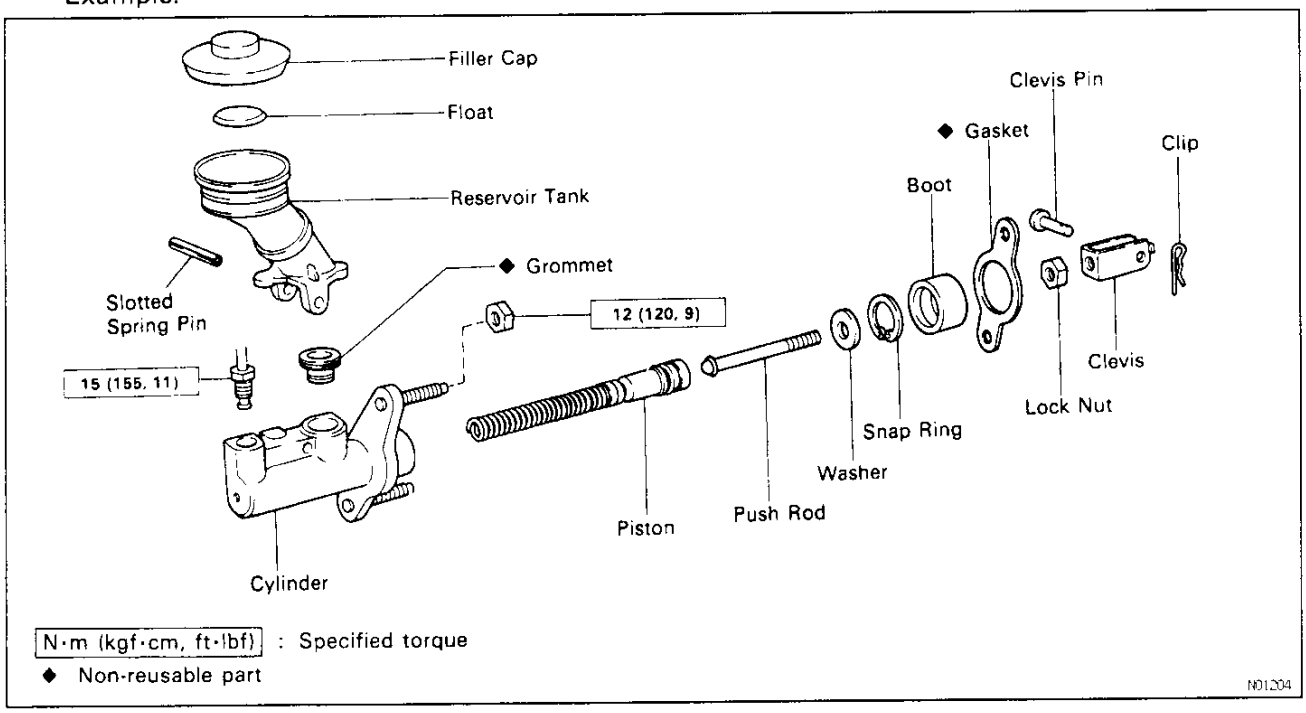

Downloaded from www.Manualslib.com manuals search engine

The procedures are presented in a step—by—step format:

- The illustration shows what to do and where to do it.
- The task heading tells what to do.
- The detailed text tells how to perform the task and gives other information such as specifications and warnings.

Example:

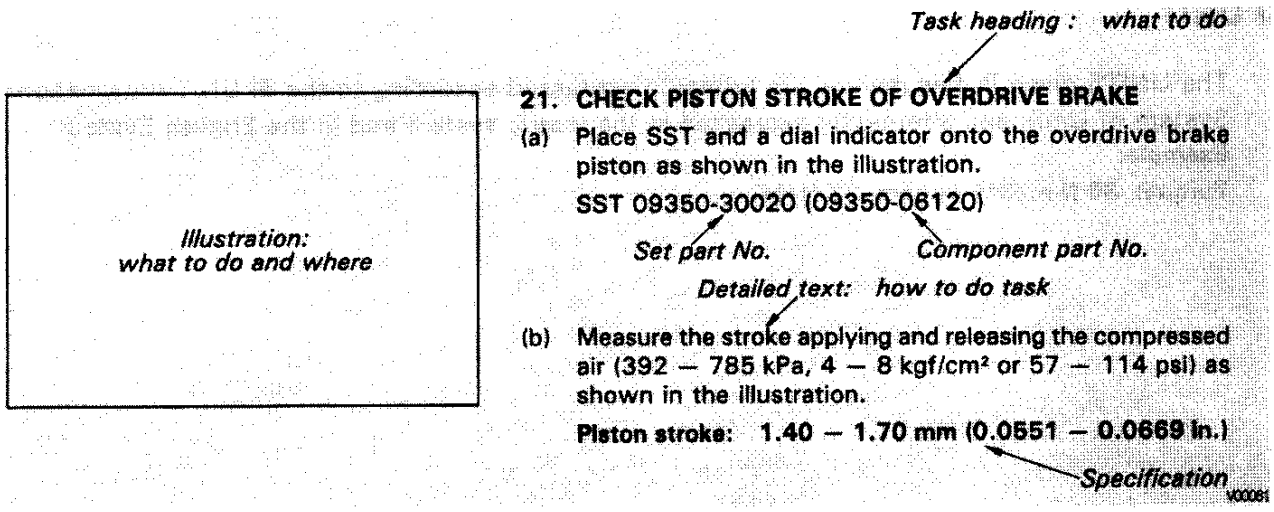

This format provides the experienced technician with a FAST TRACK to the information needed. The upper case task heading can be read at a glance when necessary, and the text below it provides detailed information. Important specifications and warnings always stand out in bold type.

IN02L-01

REFERENCES

References have been kept to a minimum. However, when they are required you are given the page to refer to.

IN02M-01

SPECIFICATIONS

Specifications are presented in bold type throughout the text where needed. You never have to leave the procedure to look up your specifications. They are also found at the end of each section, for quick reference.

Downloaded from www.Manualslib.com manuals search engine

CAUTIONS, NOTICES, HINTS:

IN02N-01

- CAUTIONS are presented in bold type, and indicate there is a possibility of injury to you or other people.
- NOTICES are also presented in bold type, and indicate the possibility of damage to the components being repaired.
- HINTS are separated from the text but do not appear in bold. They provide additional information to help you perform the repair efficiently.

SI UNIT

IN02P-02

The UNITS given in this manual are primarily expressed according to the SI UNIT (International System of Unit), and alternately expressed in the metric system and in the English System.

Example:

Torque: 30 N·m (310 kgf·cm, 22 ft·lbf)

Downloaded from www.Manualslib.com manuals search engine

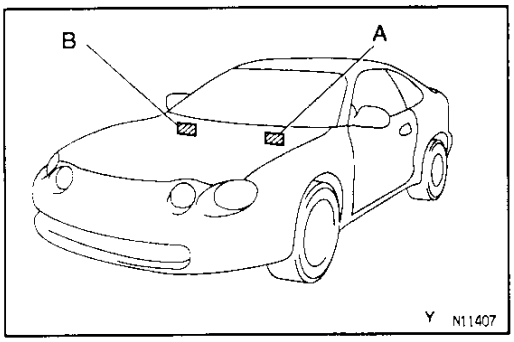

IDENTIFICATION INFORMATION

VEHICLE IDENTIFICATION NUMBER

The vehicle identification number is stamped on the vehicle identification number plate and manufacture's plate.

A. Vehicle Identification Number Plate
B. Manufacture's Plate

IN

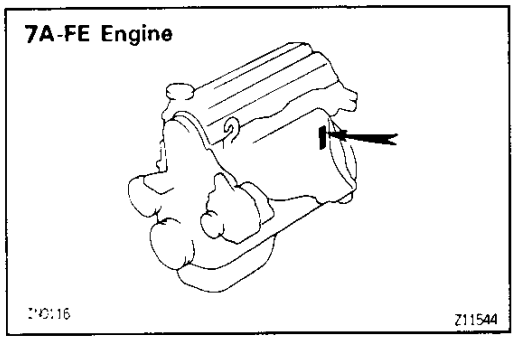

ENGINE SERIAL NUMBER

The engine serial number is stamped on the engine block as shown.

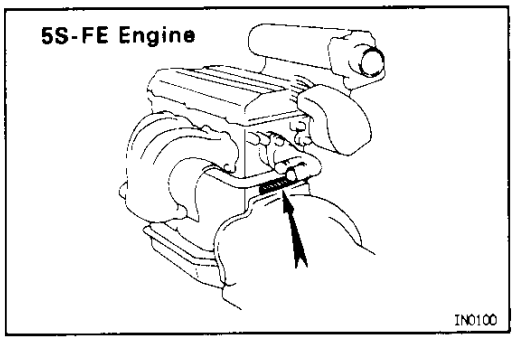

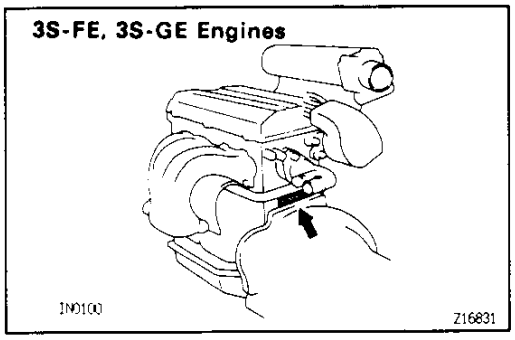

Downloaded from www.Manualslib.com manuals search engine

IN

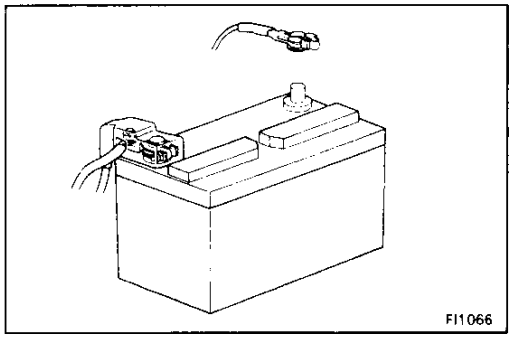

GENERAL REPAIR INSTRUCTIONS

IN045-02

1. Use fender, seat and floor covers to keep the vehicle clean and prevent damage.
2. During disassembly, keep parts in the appropriate order to facilitate reassembly.
3. Observe the following:
   (a) Before performing electrical work, disconnect the negative terminal cable from the battery.
   (b) If it is necessary to disconnect the battery for inspection or repair, always disconnect the cable from the negative (−) terminal which is grounded to the vehicle body.
   (c) To prevent damage to the battery terminal post, loosen the terminal nut and raise the cable straight up without twisting or prying it.
   (d) Clean the battery terminal posts and cable terminals with a clean shop rag. Do not scrape them with a file or other abrasive objects.
   (e) Install the cable terminal to the battery post with the nut loose, and tighten the nut after installation. Do not use a hammer to tap the terminal onto the post.
   (f) Be sure the cover for the positive (+) terminal is properly in place.
4. Check hose and wiring connectors to make sure that they are secure and correct.
5. Non−reusable parts
   (a) Always replace cotter pins, gaskets, O−rings and oil seals etc. with new ones.
   (b) Non−reusable parts are indicated in the component illustrations by the "◆" symbol.

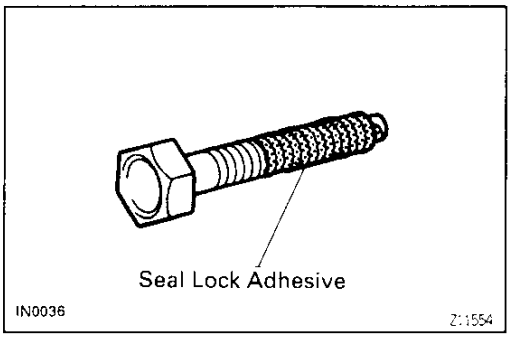

6. Precoated parts
   Precoated parts are bolts and nuts, etc. that are coated with a seal lock adhesive at the factory.
   (a) If a precoated part is retightened, loosened or caused to move in any way, it must be recoated with the specified adhesive.

Downloaded from www.Manualslib.com manuals search engine

(b) When reusing precoated parts, clean off the old adhesive and dry with compressed air. Then apply the specified seal lock adhesive to the bolt, nut or threads.

(c) Precoated parts are indicated in the component illustrations by the "★" symbol.

7. When necessary, use a sealer on gaskets to prevent leaks.
8. Carefully observe all specifications for bolt tightening torques. Always use a torque wrench.
9. Use of special service tools (SST) and special service materials (SSM) may be required, depending on the nature of the repair. Be sure to use SST and SSM where specified and follow the proper work procedure. A list of SST and SSM can be found in the preparation part at the front of each section in this manual.

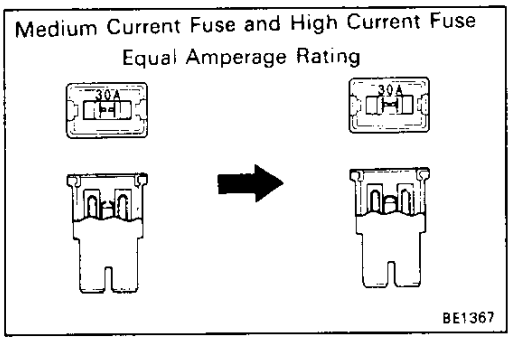

10. When replacing fuses, be sure the new fuse has the correct amperage rating. DO NOT exceed the rating or use one with a lower rating.

Illustration	Symbol	Part Name	Abbreviation
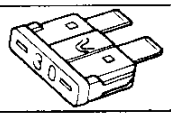 BE5594	IN0365	FUSE	FUSE
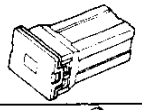 BE5595	IN0366	MEDIUM CURRENT FUSE	M-FUSE
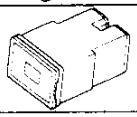 BE5596	IN0367	HIGH CURRENT FUSE	H-FUSE
BE5597	IN0367	FUSIBLE LINK	FL
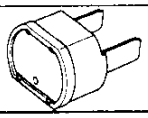 BE5598	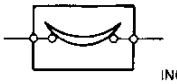 IN0368	CIRCUIT BREAKER	CB

V00076

Downloaded from www.Manualslib.com manuals search engine

IN

11. Care must be taken when jacking up and supporting the vehicle. Be sure to lift and support the vehicle at the proper locations (See page IN–12).
    (a) If the vehicle is to be jacked up only at the front or rear end, be sure to block the wheels at the opposite end in order to ensure safety.
    (b) After the vehicle is jacked up, be sure to support it on stands. It is extremely dangerous to do any work on a vehicle raised on a jack alone, even for a small job that can be finished quickly.
12. Observe the following precautions to avoid damage to the following parts:
    (a) Do not open the cover or case of the ECU unless absolutely necessary. (If the IC terminals are touched, the IC may be destroyed by static electricity.)

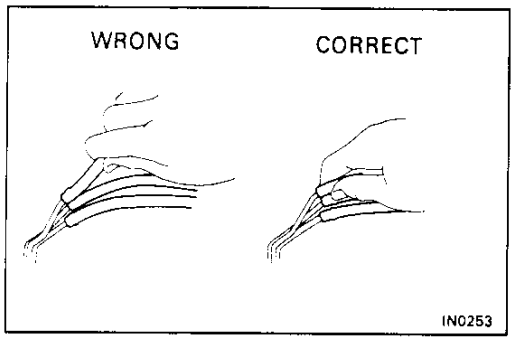

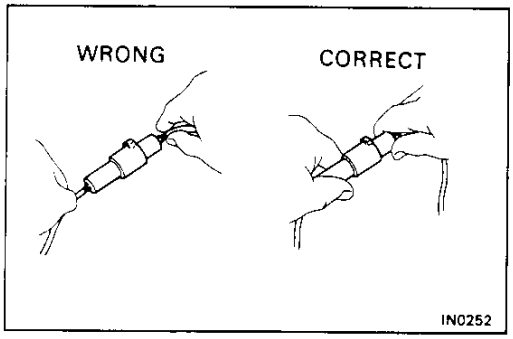

    (b) To disconnect vacuum hoses, pull on the end, not the middle of the hose.
    (c) To pull apart electrical connectors, pull on the connector itself, not the wires.
    (d) Be careful not to drop electrical components, such as sensors or relays. If they are dropped on a hard floor, they should be replaced and not reused.
    (e) When steam cleaning an engine, protect the distributor, air filter, and VCV from water.
    (f) Never use an impact wrench to remove or install temperature switches or temperature sensors.
    (g) When checking continuity at the wire connector, insert the tester probe carefully to prevent terminals from bending.
    (h) When using a vacuum gauge, never force the hose onto a connector that is too large. Use a step–down adapter instead. Once the hose has been stretched, it may leak.

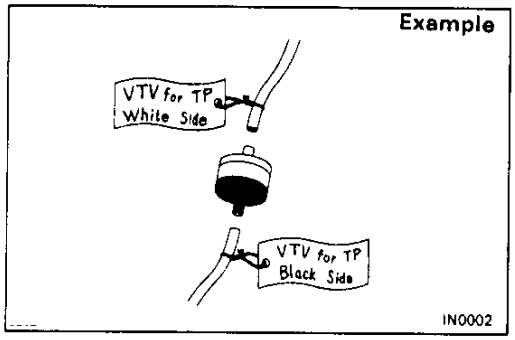

13. Tag hoses before disconnecting them:
    (a) When disconnecting vacuum hoses, use tags to identify how they should be reconnected.
    (b) After completing a job, double check that the vacuum hoses are properly connected. A label under the hood shows the proper layout.

Downloaded from www.Manualslib.com manuals search engine

14. Unless otherwise stated, all resistance is measured at an ambient temperature of 20°C (68°F). Because the resistance may be outside specifications if measured at high temperatures immediately after the vehicle has been running, measurements should be made when the engine has cooled down.

Downloaded from www.Manualslib.com manuals search engine

PRECAUTION

FOR VEHICLES EQUIPPED WITH SRS AIRBAG

IN00D-07

IN

The TOYOTA CELICA is equipped with an SRS (Supplemental Restraint System) airbag as an option.

Failure to carry out service operations in the correct sequence could cause the SRS to unexpectedly deploy during servicing, possibly leading to a serious accident.

Further, if a mistake is made in servicing the SRS, it is possible the SRS may fail to operate when required.

Before performing servicing (including removal or installation of parts, inspection or replacement), be sure to read the following items carefully, then follow the correct procedure described in this manual.

Location of Components

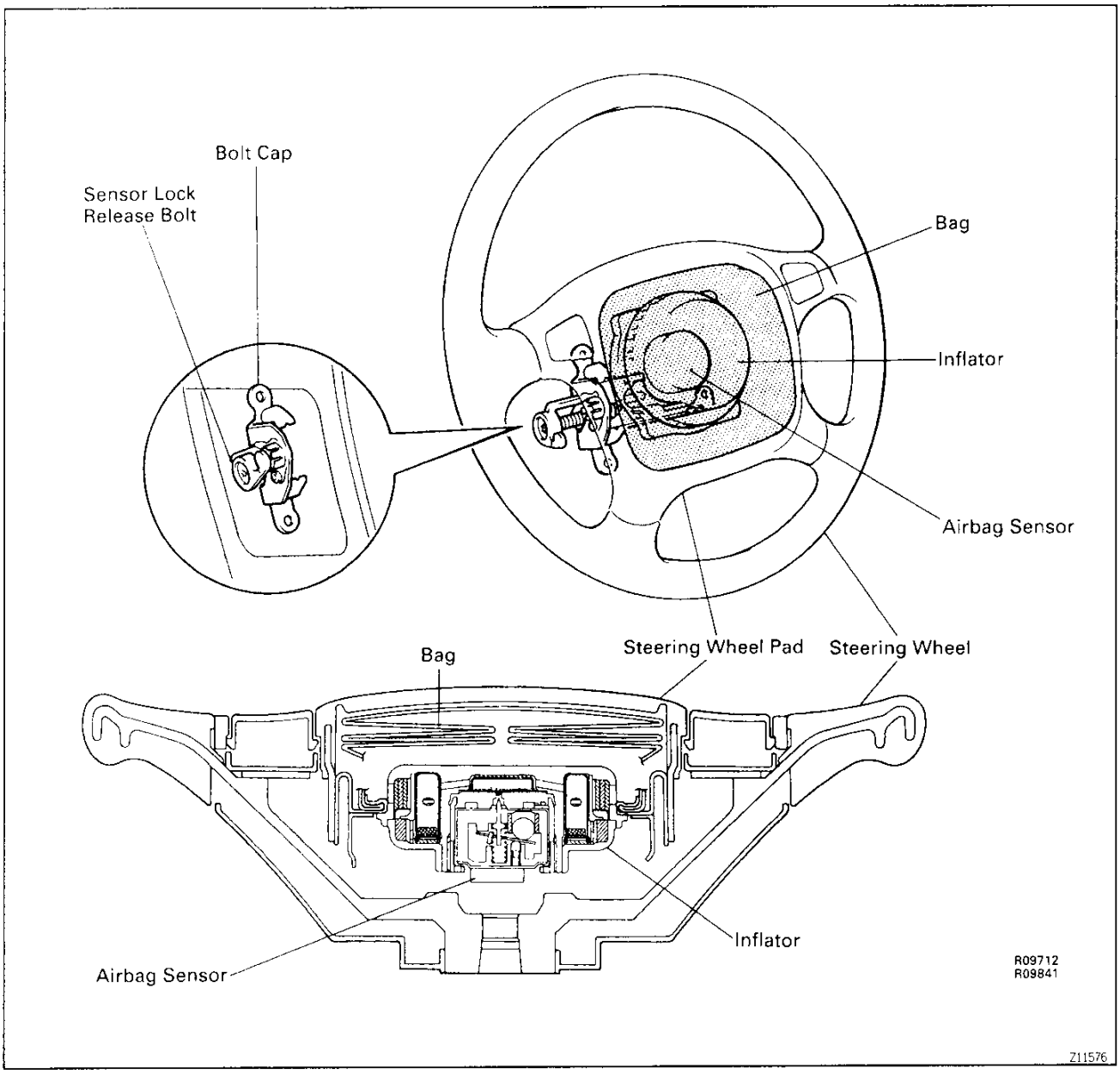

Downloaded from www.Manualslib.com manuals search engine

1. Never disassemble the steering wheel pad assembly.
2. Do not subject the steering wheel pad to shocks or bring magnets close to it.
3. Do not expose the steering wheel pad to high temperatures or fire.
4. If grease, cleaner, oil or water gets on the steering wheel pad, promptly wipe it off with a dry cloth.
5. Do not drop the steering wheel pad. Never use a steering wheel pad which has been dropped.
6. Never install the steering wheel and pad in another vehicle.
7. When the steering wheel pad is removed, store it on a stable, flat place with the pad surface facing upwards. Never place anything on top of the pad.
8. When work on the vehicle will produce too strong a shock, first loosen the sensor lock release bolt until it turns freely and perform the work after sensor lock occurs.
9. Even in cases where the vehicle is in a low–impact accident where the airbag is not activated, always check the pad surface and airbag sensor part. If dents, cracks or deformation is visible, replace the SRS with a new assembly.
10. When disposing of the vehicle or steering wheel, always deploy the SRS first.
11. The deployed inflator inside the steering wheel pad is hot, so dispose of it after it has naturally cooled down to ambient temperature. Never apply water to cool it down.

FOR VEHICLES EQUIPPED WITH A CATALYTIC CONVERTER

IN006-01

CAUTION: If large amounts of unburned gasoline flow into the converter, it may overheat and create a fire hazard. To prevent this, observe the following precautions and explain them to your customer.

1. **Use only unleaded gasoline.**
2. **Avoid prolonged idling.**
   Avoid running the engine at idle speed for more than 20 minutes.
3. **Avoid spark jump test.**
   (a) Perform spark jump test only when absolutely necessary. Perform this test as rapidly as possible.
   (b) While testing, never race the engine.
4. **Avoid prolonged engine compression measurement.**
   Engine compression tests must be done as rapidly as possible.
5. **Do not run engine when fuel tank is nearly empty.**
   This may cause the engine to misfire and create an extra load on the converter.
6. **Avoid coasting with ignition turned off and prolonged braking.**
7. **Do not dispose of used catalyst along with parts contaminated with gasoline or oil.**

Downloaded from www.Manualslib.com manuals search engine

VEHICLE LIFT AND SUPPORT LOCATIONS

IN

IN007-08

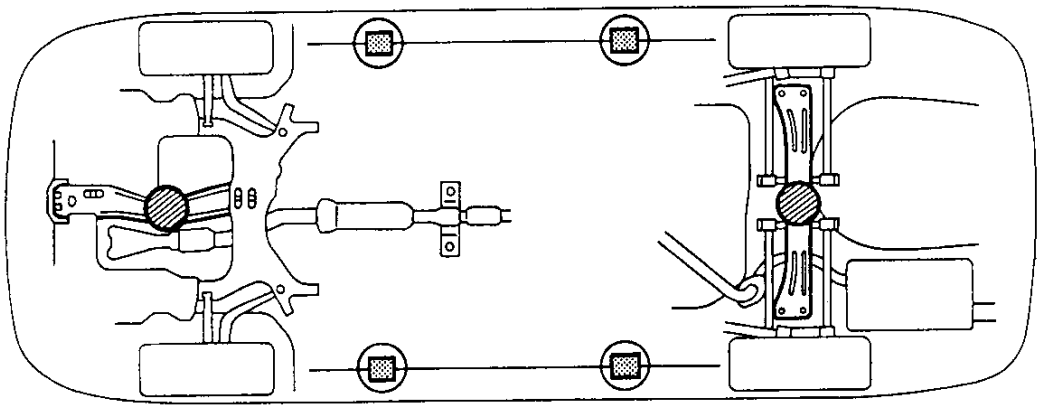

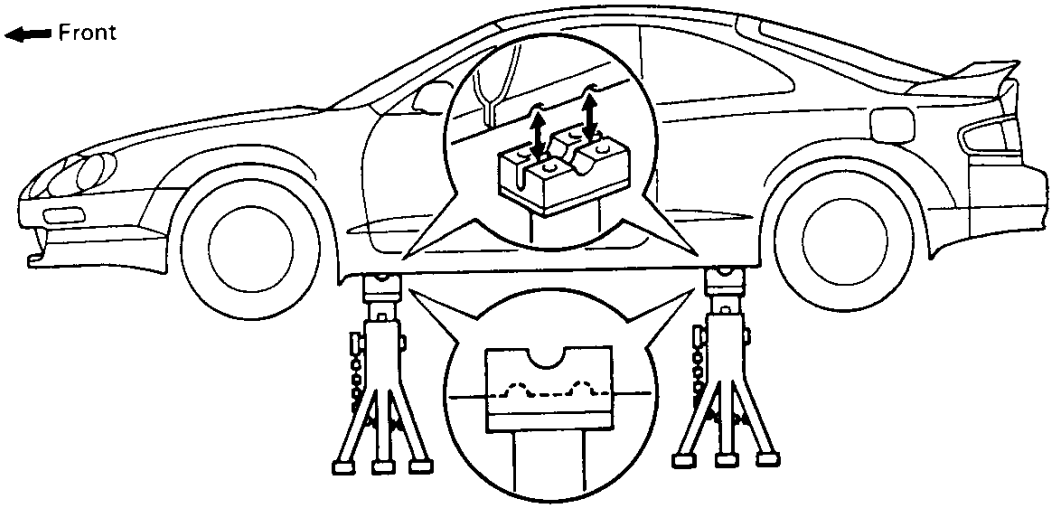

JACK POSITION

Front ..... Front crossmember
Rear ..... Rear axle beam

CAUTION: Before jacking-up the rear and front, make sure the car is not carrying any extra weight.

PANTOGRAPH JACK POSITION

SUPPORT POSITION

Safety stand and swing arm type lift .....

N10604
N10606

Z11543

Downloaded from www.Manualslib.com manuals search engine

ABBREVIATIONS USED IN THIS MANUAL

IN01D-02

ABS	Anti–Lock Brake System
ALR	Automatic Locking Retractor
APPROX.	Approximately
A/T	Automatic Transaxle
ATF	Automatic Transaxle Fluid
CB	Circuit Breaker
CD	Compact Disc
CRS	Child Restraint System
ECU	Electronic Control Unit
ELR	Emergency Locking Retractor
ETR	Electronic Turning Radio
EX	Exhaust
Ex.	Except
FIPG	Formed in Place Gasket
FL	Fusible Link
Fr	Front
H–Fuse	High Current Fuse
IG	Ignition
JB	Junction Block
LED	Light Emitting Diode
LH	Left–Hand
LSD	Limited Slip Differential
Max.	Maximum
MP	Multipurpose
M/T	Manual Transaxle
O/D	Overdrive
P & BV	Proportioning and By–pass Valve
PS	Power Steering
RH	Right–Hand
SRS	Supplemental Restraint System
SSM	Special Service Materials
SST	Special Service Tools
STD	Standard
SW	Switch
TEMP.	Temperature
w/	With
w/o	Without

Downloaded from www.Manualslib.com manuals search engine

STANDARD BOLT TORQUE SPECIFICATIONS

IN006 01

IN

HOW TO DETERMINE BOLT STRENGTH

	Mark	Class
Hexagon head bolt	Bolt head No. 4– 5– 6– 7– 8– 9– 10– 11–	4T 5T 6T 7T 8T 9T 10T 11T
	No mark	4T
Hexagon flange bolt w/ washer hexagon bolt	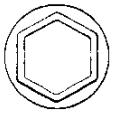 No mark	4T
Hexagon head bolt	2 protruding lines	5T
Hexagon flange bolt w/ washer hexagon bolt	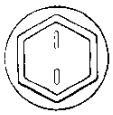 2 protruding lines	6T
Hexagon head bolt	3 protruding lines	7T
Hexagon head bolt	4 protruding lines	8T

	Mark	Class
Stud bolt	No mark	4T
	Grooved	6T
Welded bolt	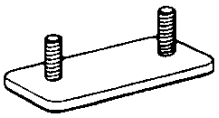	4T

V00078

Downloaded from www.Manualslib.com manuals search engine

SPECIFIED TORQUE FOR STANDARD BOLTS

Class	Diameter mm	Pitch mm	Specified torque					
			Hexagon head bolt			Hexagon flange bolt		
			N·m	kgf·cm	ft·lbf	N·m	kgf·cm	ft·lbf
4T	6	1	5	55	48 in.·lbf	6	60	52 in.·lbf
	8	1.25	12.5	130	9	14	145	10
	10	1.25	26	260	19	29	290	21
	12	1.25	47	480	35	53	540	39
	14	1.5	74	760	55	84	850	61
	16	1.5	115	1,150	83	–	–	–
5T	6	1	6.5	65	56 in.·lbf	7.5	75	65 in.·lbf
	8	1.25	15.5	160	12	17.5	175	13
	10	1.25	32	330	24	36	360	26
	12	1.25	59	600	43	65	670	48
	14	1.5	91	930	67	100	1,050	76
	16	1.5	140	1,400	101	–	–	–
6T	6	1	8	80	69 in.·lbf	9	90	78 in.·lbf
	8	1.25	19	195	14	21	210	15
	10	1.25	39	400	29	44	440	32
	12	1.25	71	730	53	80	810	59
	14	1.5	110	1,100	80	125	1,250	90
	16	1.5	170	1,750	127	–	–	–
7T	6	1	10.5	110	8	12	120	9
	8	1.25	25	260	19	28	290	21
	10	1.25	52	530	38	58	590	43
	12	1.25	95	970	70	105	1,050	76
	14	1.5	145	1,500	108	165	1,700	123
	16	1.5	230	2,300	166	–	–	–
8T	8	1.25	29	300	22	33	330	24
	10	1.25	61	620	45	68	690	50
	12	1.25	110	1,100	80	120	1,250	90
9T	8	1.25	34	340	25	37	380	27
	10	1.25	70	710	51	78	790	57
	12	1.25	125	1,300	94	140	1,450	105
10T	8	1.25	38	390	28	42	430	31
	10	1.25	78	800	58	88	890	64
	12	1.25	140	1,450	105	155	1,600	116
11T	8	1.25	42	430	31	47	480	35
	10	1.25	87	890	64	97	990	72
	12	1.25	155	1,600	116	175	1,800	130

V00079

Downloaded from www.Manualslib.com manuals search engine

Downloaded from www.Manualslib.com manuals search engine

CLUTCH

DESCRIPTION ..... CL– 2
PREPARATION ..... CL– 4
TROUBLESHOOTING ..... CL– 5
CLUTCH SYSTEM BLEEDING ..... CL– 6
CLUTCH PEDAL ..... CL– 7
CLUTCH MASTER CYLINDER ..... CL– 9
CLUTCH RELEASE CYLINDER ..... CL– 13
CLUTCH UNIT ..... CL– 18
SERVICE SPECIFICATIONS ..... CL– 22

Downloaded from www.Manualslib.com manuals search engine

DESCRIPTION

CL069 – 02

The diaphragm spring turnover type clutch providing lighter release performance.

CL

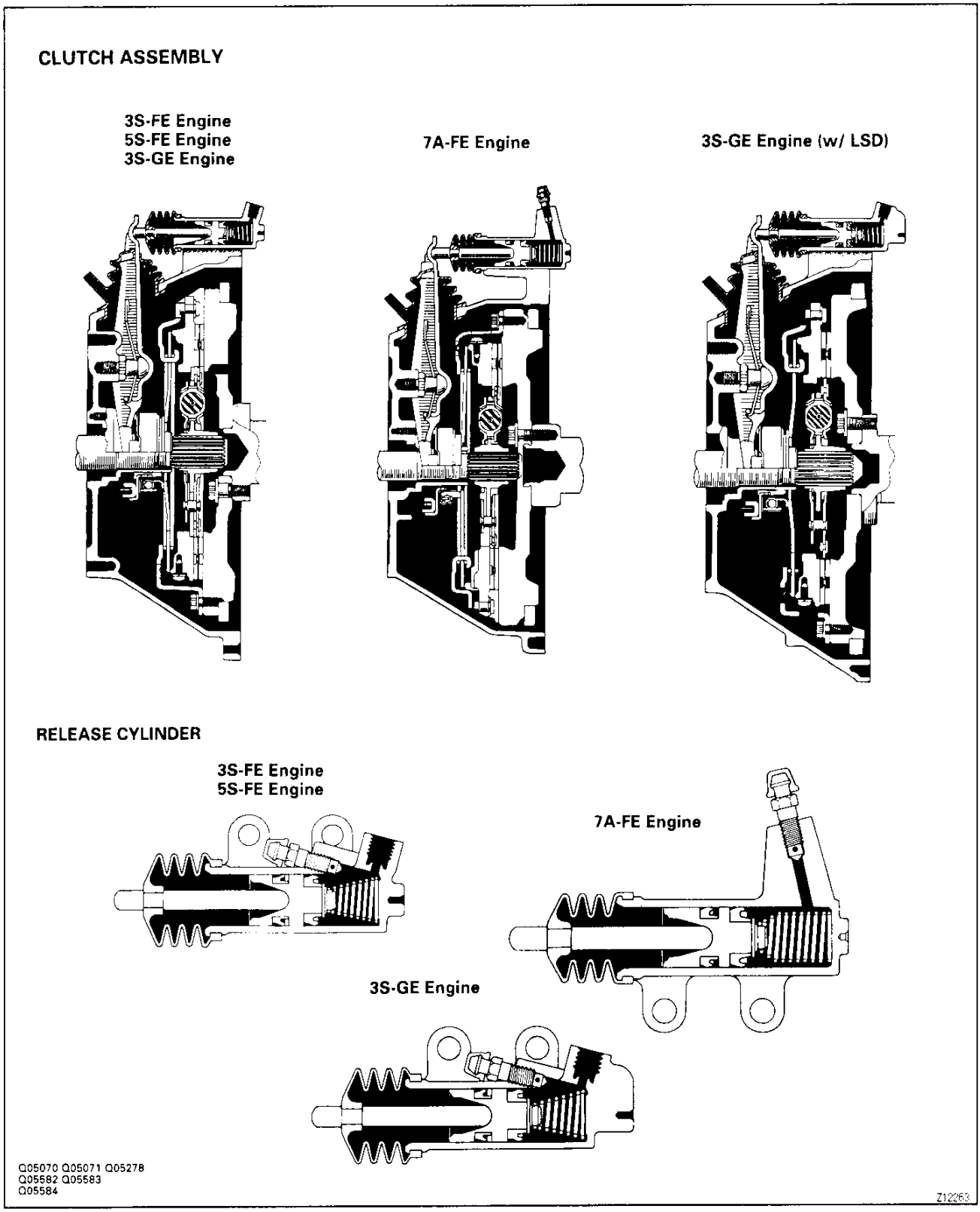

Downloaded from www.Manualslib.com manuals search engine

MASTER CYLINDER
LHD

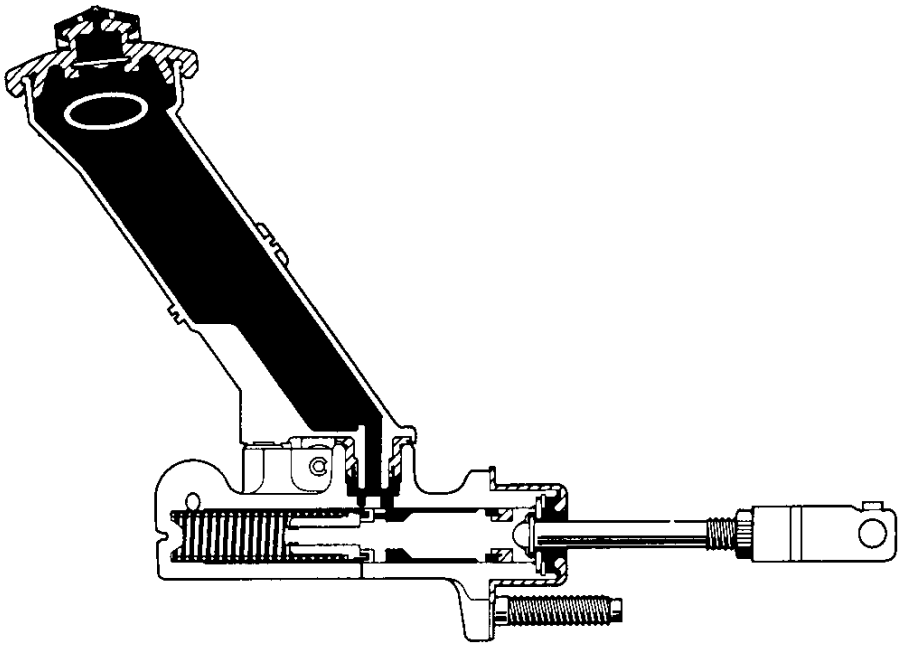

RHD

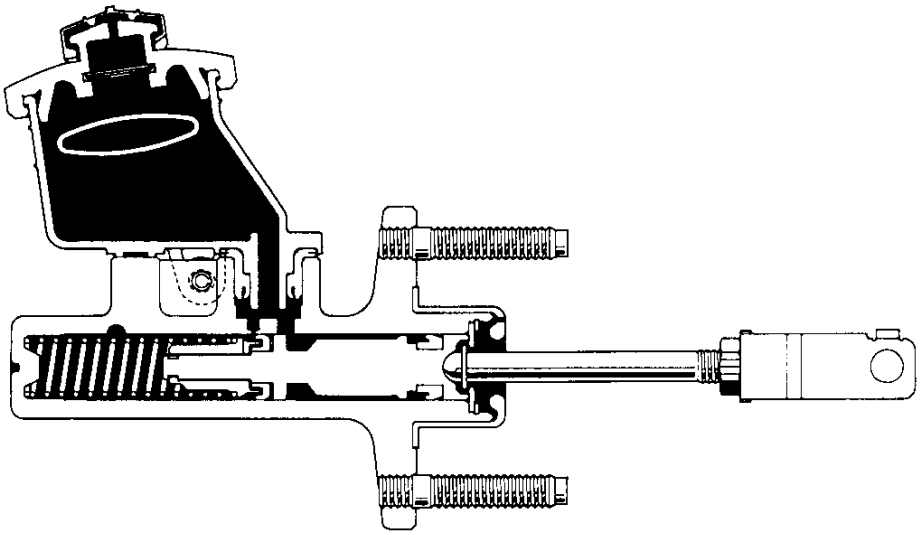

Q05049
Q05309

Z12266

Downloaded from www.Manualslib.com manuals search engine

PREPARATION

SST(SPECIAL SERVICE TOOLS)

CL008-02

	09023-00100	Union Nut Wrench 10 mm	Clutch line
	09301-00110	Clutch Guide Tool	7A-FE engine
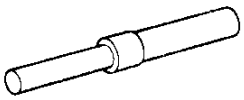	09301-00210	Clutch Guide Tool	3S-FE engine 5S-FE engine 3S-GE engine
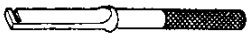	09333-00013	Clutch Diaphragm Spring Aligner	

RECOMMENDED TOOLS

CL076-01

	09082-00050	TOYOTA Electrical Tester Set	
	09905-00013	Snap Ring Pliers	

EQUIPMENT

CL004-01

Calipers	
Dial indicator	
Torque wrench	

Downloaded from www.Manualslib.com manuals search engine

TROUBLESHOOTING

CL06M-03

Use the table below to help you find the cause of the problem. The numbers indicate the priority of the likely cause of the problem. Check each part in order. If necessary, replace these parts.

Trouble \ Parts Name \ See Page	Clutch pedal (Freeplay out of adjustment) CL-7	Clutch line (Air in line) CL-6	Master cylinder cup (Damaged) CL-9	Release cylinder cup (Damaged) CL-13	Engine mounting (Loosen) –	Release bearing (Worn, dirty or damaged) CL-18	Input shaft bearing (Worn or damaged) *	Clutch disc (Out of true) CL-18	Clutch disc (Runout is excessive) CL-18	Clutch disc (Lining broken) CL-18	Clutch disc (Dirty or burred) CL-18	Clutch disc (Oily) CL-18	Clutch disc (Worn out) CL-18	Clutch disc torsion rubber (Damaged) CL-18	Clutch disc (Harden) CL-18	Clutch disc (Lack of spline grease) CL-21	Diaphragm spring (Damaged) CL-18	Diaphragm spring (Out of tip alignment) CL-20	Pressure plate (Distortion) CL-18	Flywheel (Distortion) –
Clutch grabs/chatters					1				2			2	2	2	2			2		
Clutch pedal spongy		1	2	2																
Clutch noisy						1	2							3						
Clutch slips	1											2	2				3		4	5
Clutch does not disengage	1	2	3	4			5	6	6	6	6	6				6	7	7	8	

V00004

*: See C52 Manual Transaxle on page MX-38
See S54 Manual Transaxle on page MX-33
See E56 Manual Transaxle on page MX-34

CL

Downloaded from www.Manualslib.com manuals search engine

CL

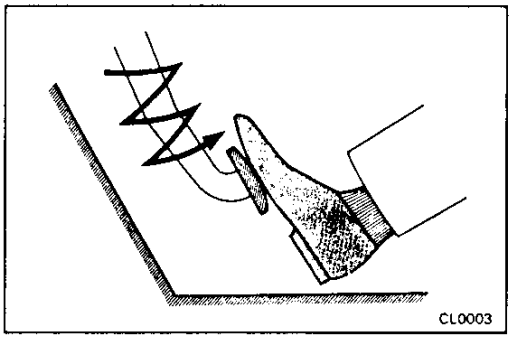

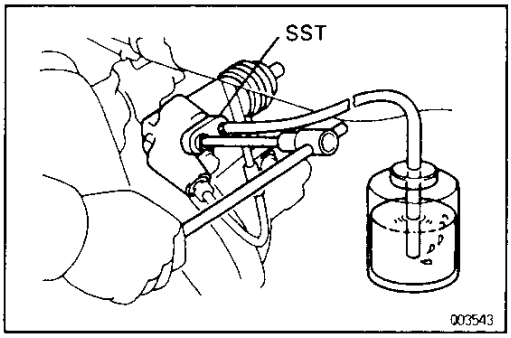

CLUTCH SYSTEM BLEEDING

CL006-00

HINT: If any work is done on the clutch system or if air is suspected in the clutch lines, bleed the system of air.

NOTICE: Do not let brake fluid remain on a painted surface. Wash it off immediately.

1. **FILL CLUTCH RESERVOIR WITH BRAKE FLUID**
2. **CONNECT VINYL LINE TO BLEEDER PLUG**
   Insert the other end of the line in a half—full container of brake fluid.
3. **BLEED CLUTCH LINE**
   HINT: Check the reservoir frequently. Add fluid if necessary.

(a) Slowly pump the clutch pedal several times.

(b) While pressing on the pedal, loosen the bleeder plug until the fluid starts to run out. Then close the bleeder plug.
SST 09023—00100

(c) Repeat this procedure until there are no more air bubbles in the fluid.

Downloaded from www.Manualslib.com manuals search engine

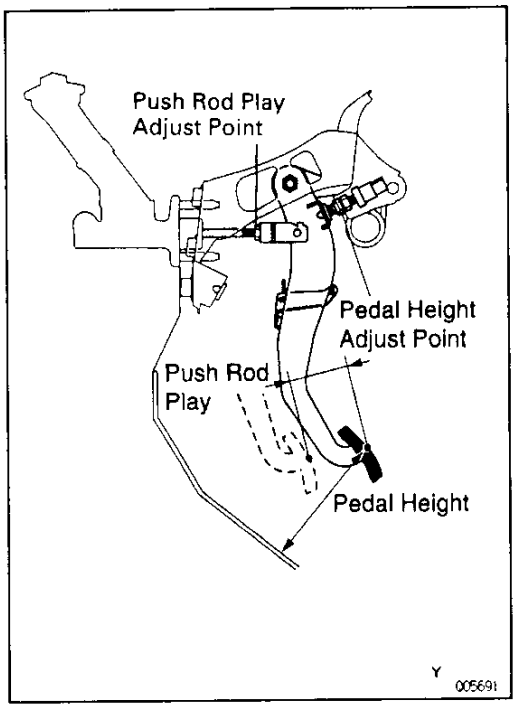

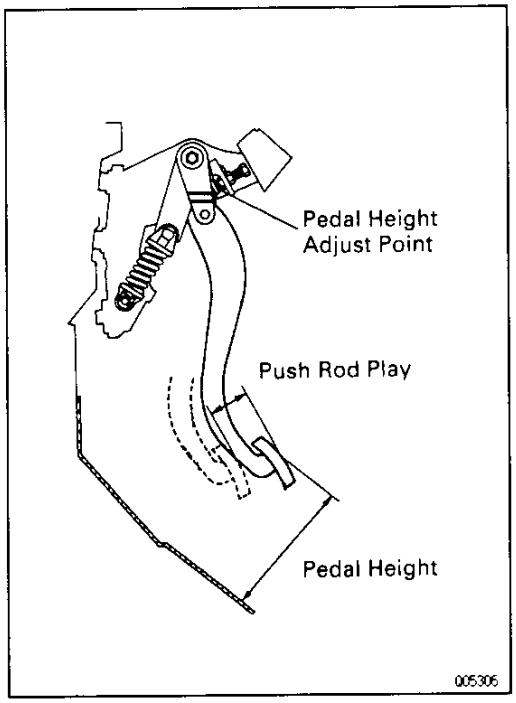

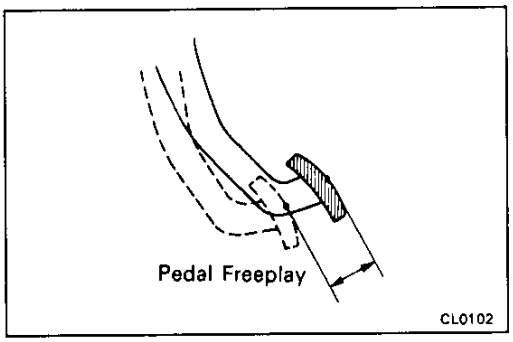

CLUTCH PEDAL

CL08E-01

CLUTCH PEDAL CHECK AND ADJUSTMENT

1. CHECK THAT PEDAL HEIGHT IS CORRECT

Pedal height from asphalt sheet:

LHD 144.9 – 154.9 mm (5.705 – 6.098 in.)

RHD 141.0 – 151.0 mm (5.551 – 5.945 in.)

2. IF NECESSARY, ADJUST PEDAL HEIGHT

Loosen the lock nut and turn the stopper bolt until the height is correct. Tighten the lock nut.

3. CHECK THAT PEDAL FREEPLAY AND PUSH ROD PLAY ARE CORRECT

Pedal freeplay:

Push in on the pedal until the beginning of clutch resistance is felt.

Pedal freeplay:

5.0 – 15.0 mm (0.197 – 0.591 in.)

Push rod play:

Push in on the pedal with a finger softly until the resistance begins to increase a little.

Push rod play at pedal top:

1.0 – 5.0 mm (0.039 – 0.197 in.)

4. IF NECESSARY, ADJUST PEDAL FREEPLAY AND PUSH ROD PLAY

(a) Loosen the lock nut and turn the push rod until the freeplay and push rod play are correct.

(b) Tighten the lock nut.

(c) After adjusting the pedal freeplay, check the pedal height.

(d) Connect the air duct and install the lower finish panel.

5. CHECK CLUTCH RELEASE POINT

(a) Pull the parking brake lever and install wheel stopper.

(b) Start the engine and idle the engine.

(c) Without depressing the clutch pedal, slowly shift the shift lever into reverse position until the gears contact.

CL

Downloaded from www.Manualslib.com manuals search engine

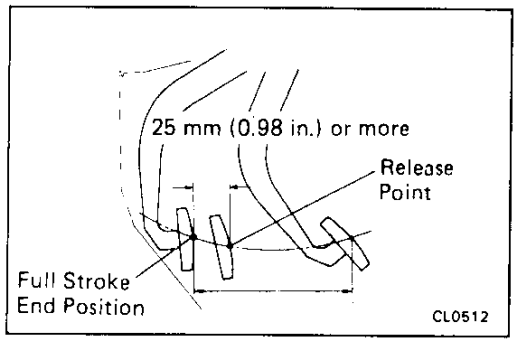

(d) Gradually depress the clutch pedal and measure the stroke distance from the point the gear noise stops (release point) up to the full stroke end position.

Standard distance:

25 mm (0.98 in.) or more

If the distance not as specified, perform the following operation.

- Check pedal height.
- Check push rod play and pedal freeplay.
- Bleed the clutch line.
- Check the clutch cover and disc.

Downloaded from www.Manualslib.com manuals search engine

CLUTCH MASTER CYLINDER
COMPONENTS

CL0008 - DC

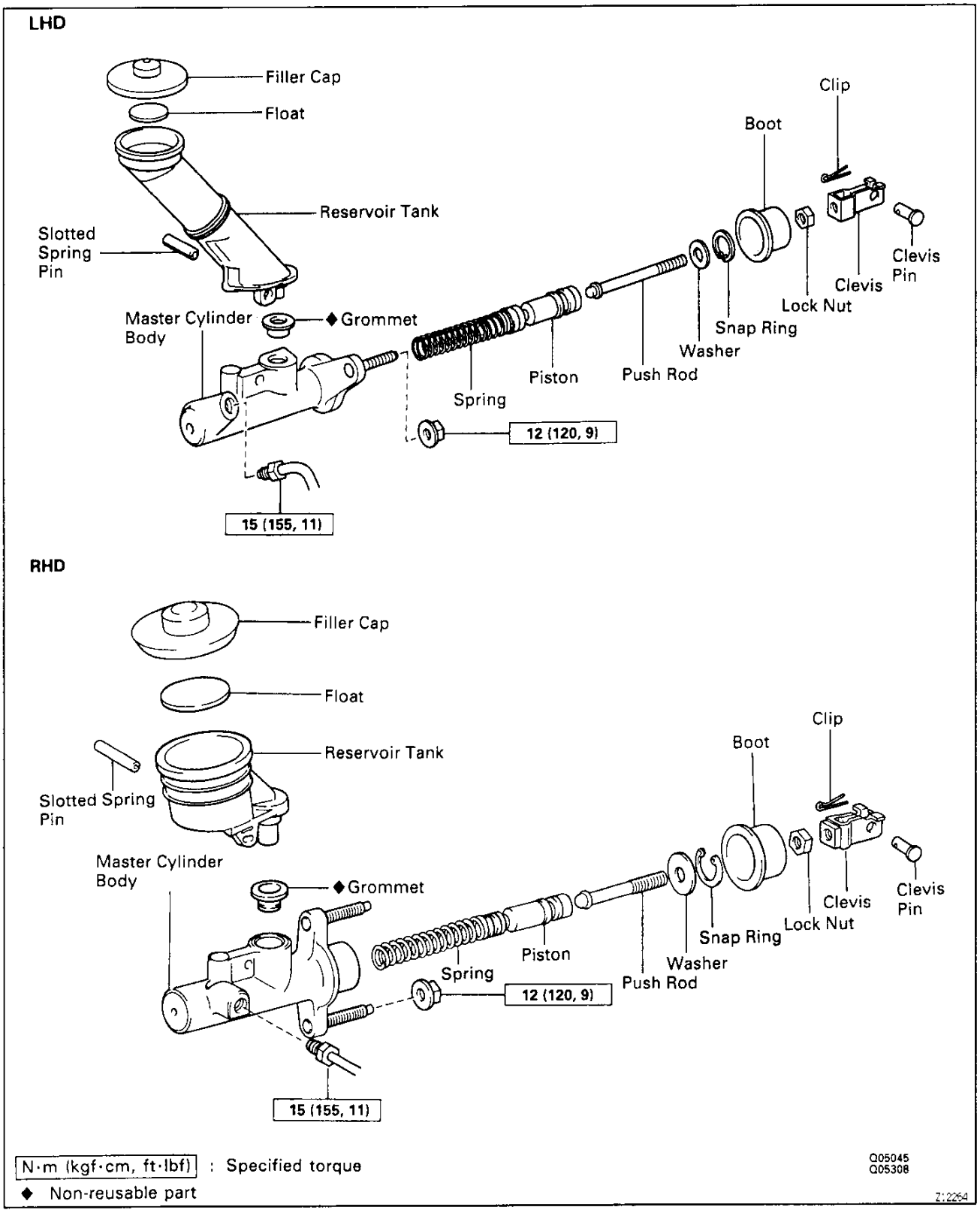

Downloaded from www.Manualslib.com manuals search engine

CL

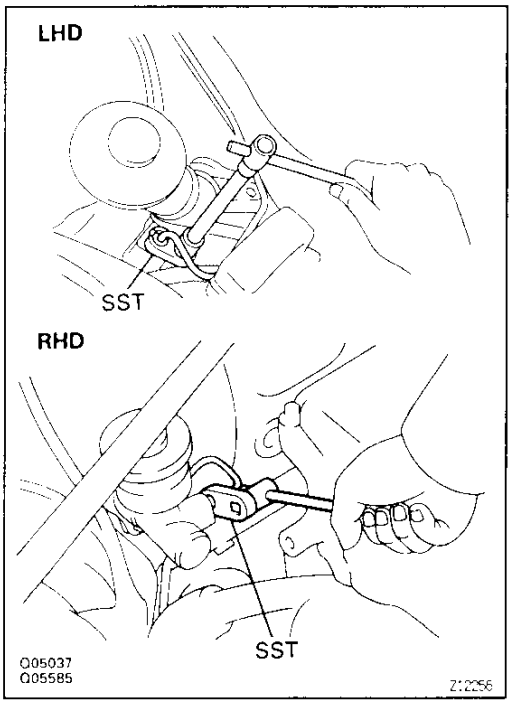

CL00G – 0E

MASTER CYLINDER REMOVAL

1. **DRAW OUT FLUID WITH SYRINGE**
2. **DISCONNECT CLUTCH LINE**
   Using SST, disconnect the clutch line. Use a container to catch the brake fluid.
   SST 09023–00100
3. **REMOVE CLIP AND CLEVIS PIN**
4. **REMOVE 2 MOUNTING NUTS AND PULL OUT MASTER CYLINDER**

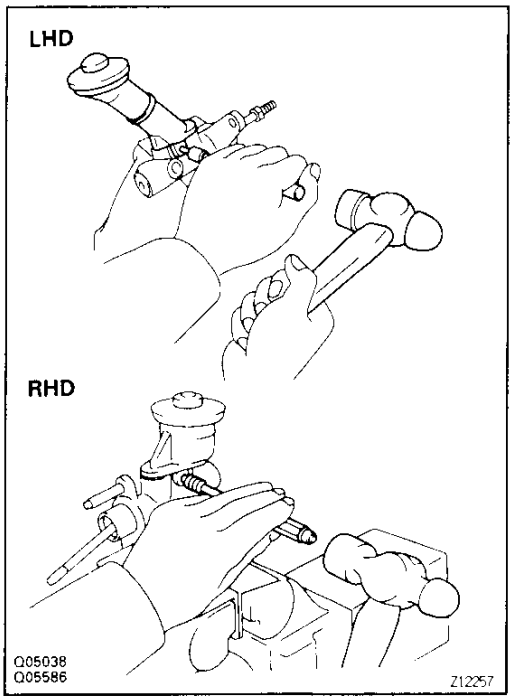

CL00A – 0B

MASTER CYLINDER DISASSEMBLY

1. **REMOVE CLEVIS**
2. **REMOVE RESERVOIR TANK**

(a) Using a pin punch and a hammer, drive out the slotted spring pin.

(b) Remove the reservoir tank and grommet.

Downloaded from www.Manualslib.com manuals search engine

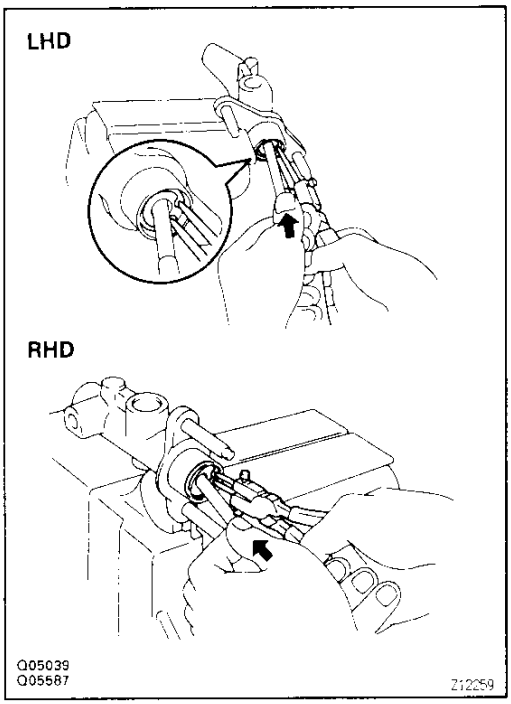

3. **REMOVE PUSH ROD**
   Pull back the boot, and using snap ring pliers, remove the snap ring.
4. **REMOVE PISTON**

CL

MASTER CYLINDER INSPECTION

CL008-02

HINT: Clean the disassembled parts with compressed air.

1. **INSPECT MASTER CYLINDER BORE FOR SCORING OR CORROSION**
   If a problem is found, clean or replace the cylinder.
2. **INSPECT PISTON AND CUPS FOR WEAR, SCORING, CRACKS OR SWELLING**
   If either one requires replacement, use the parts from the cylinder kit.
3. **INSPECT PUSH ROD FOR WEAR OR DAMAGE**
   If necessary, replace the push rod.

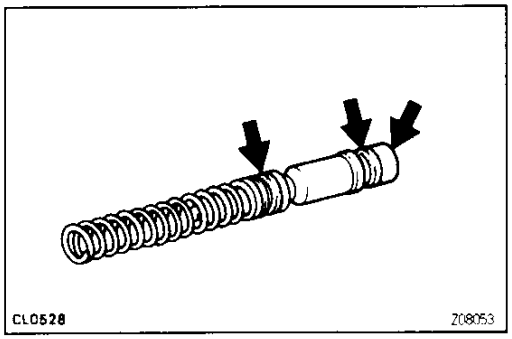

MASTER CYLINDER ASSEMBLY

CL00C-08

1. **COAT PARTS WITH LITHIUM SOAP BASE GLYCOL GREASE, AS SHOWN**
2. **INSERT PISTON INTO CYLINDER**
3. **INSTALL PUSH ROD ASSEMBLY WITH WASHER AND SNAP RING**

Downloaded from www.Manualslib.com manuals search engine

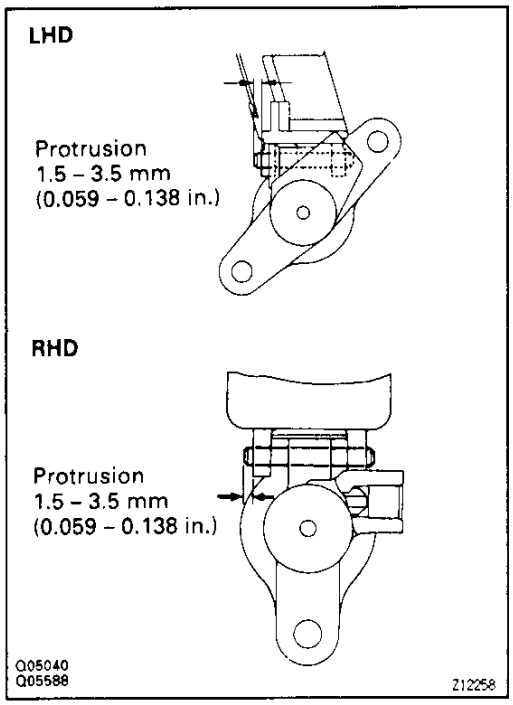

4. **INSTALL RESERVOIR TANK**
(a) Install the reservoir tank and a new grommet.
(b) Using a pin punch and hammer, drive in the slotted spring pin.
5. **INSTALL CLEVIS**

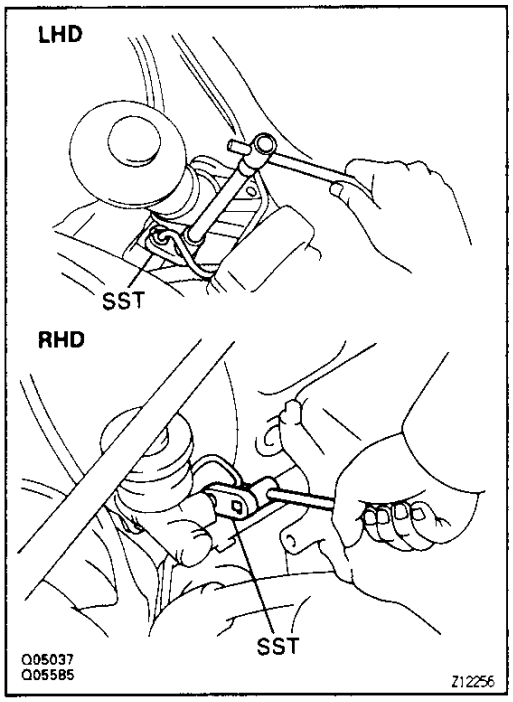

MASTER CYLINDER INSTALLATION

CL000-0J

1. **INSTALL MASTER CYLINDER**
Install the 2 mounting nuts, and torque them.
Torque: 12 N·m (120 kgf·cm, 9 ft·lbf)
2. **CONNECT CLUTCH LINE**
Using SST, connect the cluch line.
SST 09023–00100
Torque: 15 N·m (155 kgf·cm, 11 ft·lbf)
3. **CONNECT PUSH ROD AND INSTALL PIN**
Install the clip in the push rod pin.
4. **BLEED CLUTCH SYSTEM**
(See page CL–6)
5. **ADJUST CLUTCH PEDAL**
(See page CL–7)

Downloaded from www.Manualslib.com manuals search engine

CLUTCH RELEASE CYLINDER
COMPONENTS

CL0GC-01

3S-GE Engine

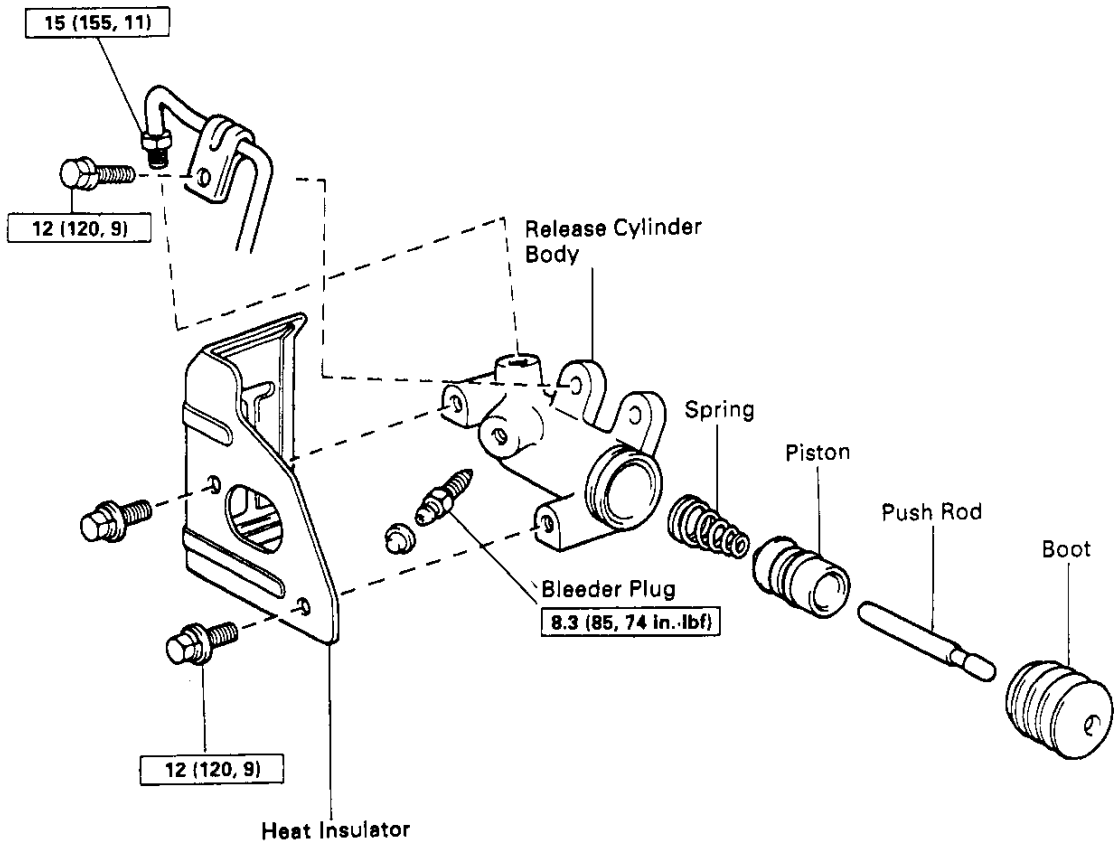

N·m (kgf·cm, ft·lbf) : Specified torque

005626

Downloaded from www.Manualslib.com manuals search engine

CL

7A-FE Engine

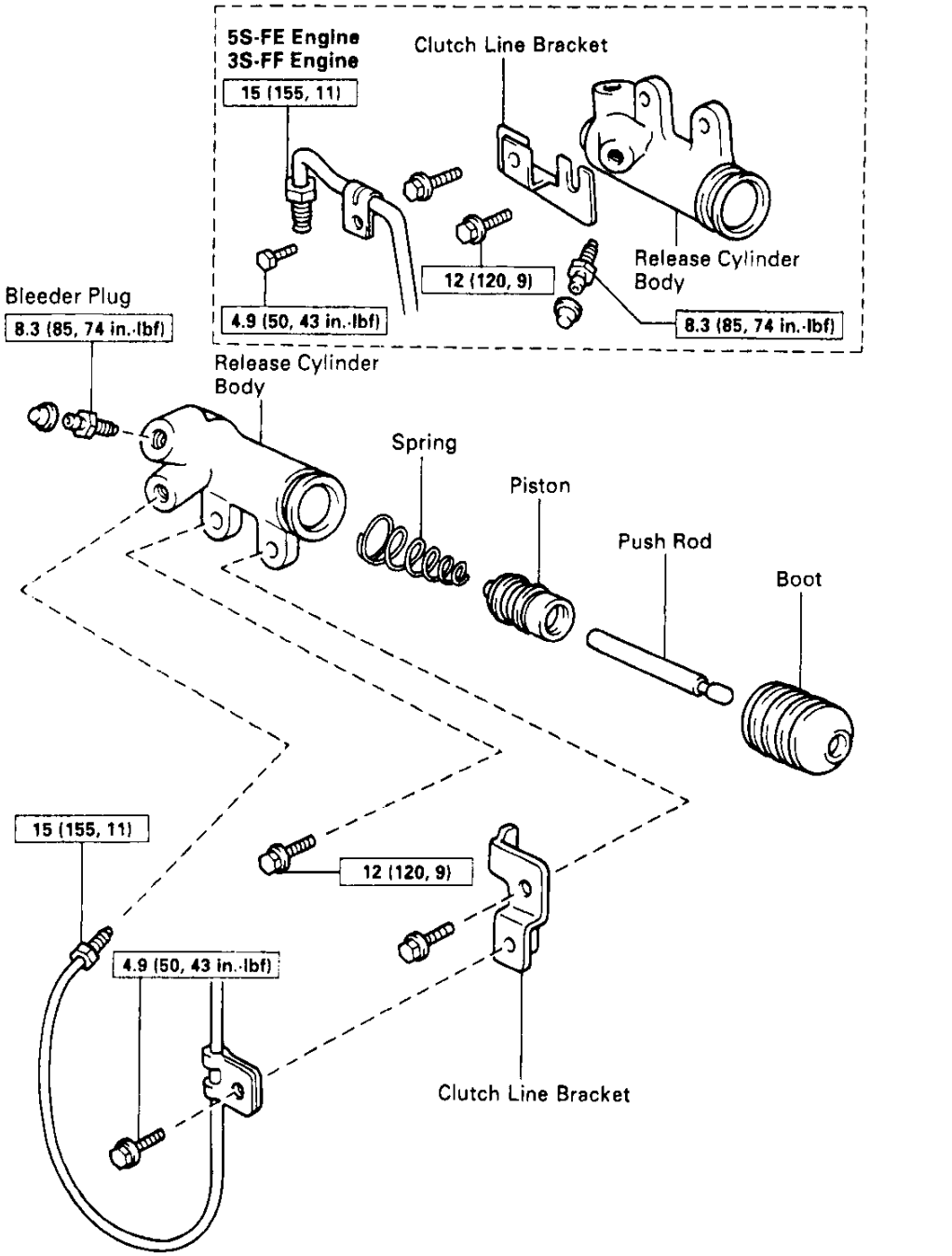

N·m (kgf·cm, ft·lbf) : Specified torque

Z12265

Downloaded from www.Manualslib.com manuals search engine

CL08D-01

RELEASE CYLINDER REMOVAL

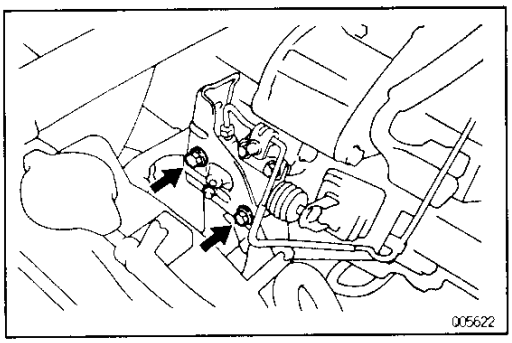

1. **REMOVE 2 BOLTS AND HEAT INSULATOR (3S–GE)**

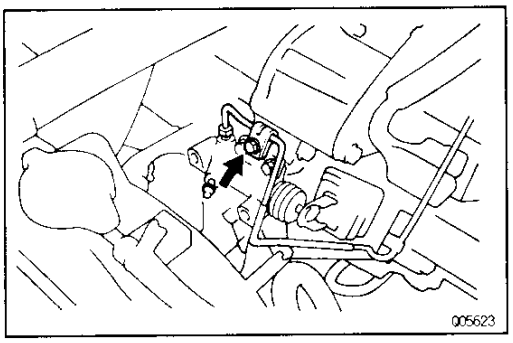

2. **REMOVE BOLT AND LINE CLAMP**

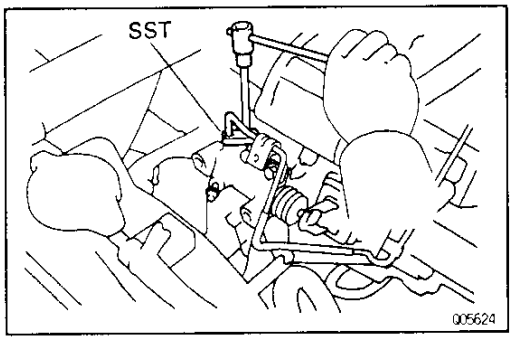

3. **DISCONNECT CLUTCH LINE**
   Using SST, disconnect the clutch line. Use a container to catch the brake fluid.
   SST 09023–00100

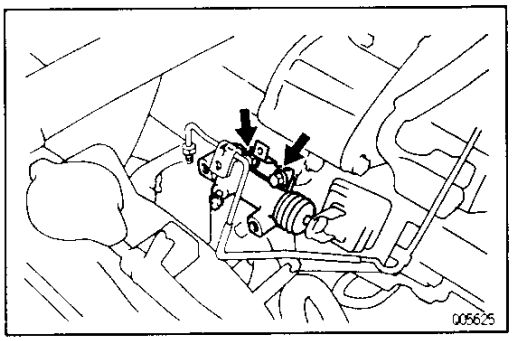

4. **REMOVE RELEASE CYLINDER**
   Remove the 2 bolts and pull out release cylinder.

CL00T-07

RELEASE CYLINDER DISASSEMBLY

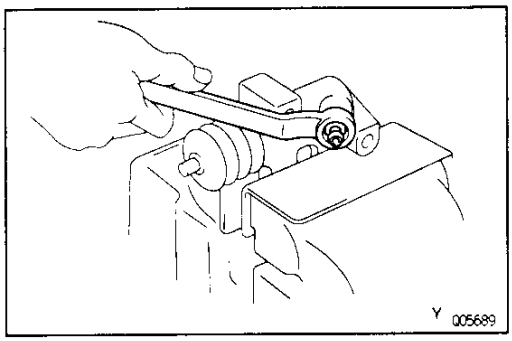

1. **REMOVE BLEEDER PLUG**
2. **PULL OUT BOOT WITH PUSH ROD**

Downloaded from www.Manualslib.com manuals search engine

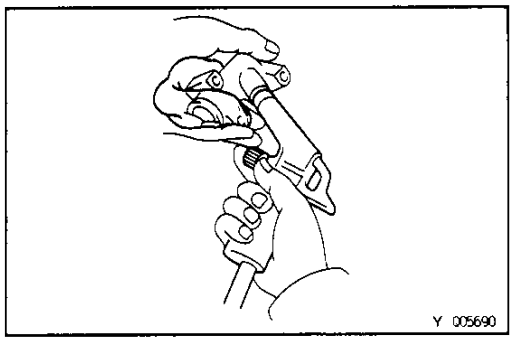

3. **REMOVE PISTON**
   Using compressed air, remove the piston with the spring from the cylinder.

CL

RELEASE CYLINDER INSPECTION

CL00U-02

HINT: Clean the disassembled parts with compressed air.

1. **INSPECT RELEASE CYLINDER BORE FOR SCORING OR CORROSION**
   If a problem is found, clean or replace the cylinder.
2. **INSPECT PISTON AND CUPS FOR WEAR, SCORING, CRACKS OR SWELLING**
   If either one requires replacement, use the parts from the cylinder kit.
3. **INSPECT PUSH ROD FOR WEAR OR DAMAGE**
   If necessary, replace the push rod.

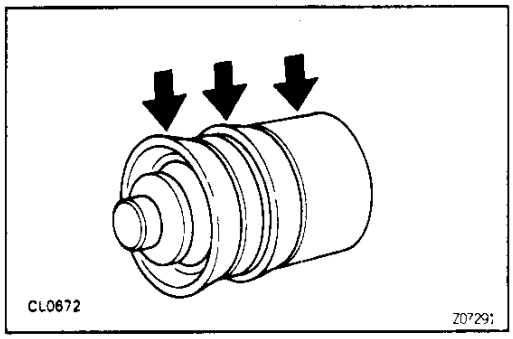

RELEASE CYLINDER ASSEMBLY

CL01C-06

1. **COAT PISTON WITH LITHIUM SOAP BASE GLYCOL GREASE, AS SHOWN**
2. **INSTALL PISTON WITH SPRING INTO CYLINDER**
3. **INSTALL BOOT WITH PUSH ROD TO CYLINDER**
4. **INSTALL BLEEDER PLUG**

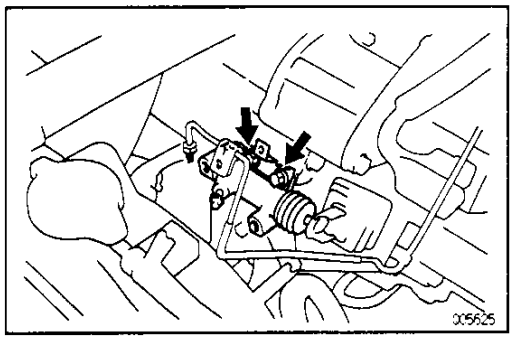

RELEASE CYLINDER INSTALLATION

CL08F-01

1. **INSTALL RELEASE CYLINDER**
   (a) Install release cylinder with 2 bolts.
   Torque: 12 N·m (120 kgf·cm, 9 ft·lbf)

Downloaded from www.Manualslib.com manuals search engine

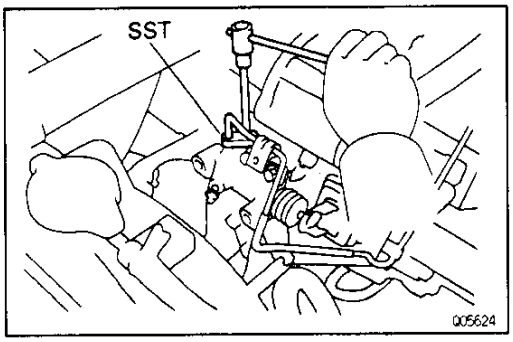

2. CONNECT CLUTCH LINE

Using SST, connect the clutch line.

SST 09023–00100

Torque: 15 N·m (155 kgf·cm, 11 ft·lbf)

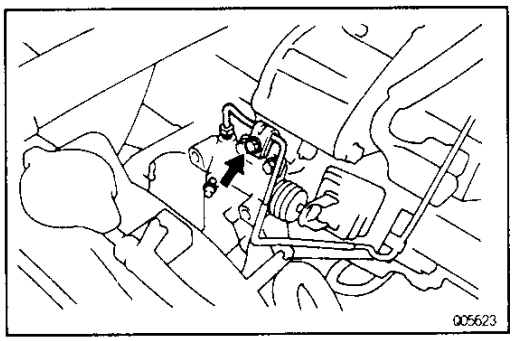

3. INSTALL LINE CLAMP

Install line clamp with the bolt to the line clamp bracket.

Torque: 4.9 N·m (50 kgf·cm, 43 in.·lbf)

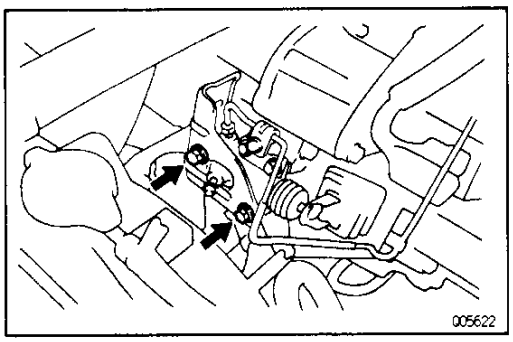

4. INSTALL HEAT INSULATOR

5. FILL CLUTCH RESERVOIR WITH BRAKE FLUID AND BLEED CLUTCH SYSTEM

(See page CL–6)

6. CHECK FOR LEAKS

Downloaded from www.Manualslib.com manuals search engine

CLUTCH UNIT
COMPONENTS

CL00K-0E

CL

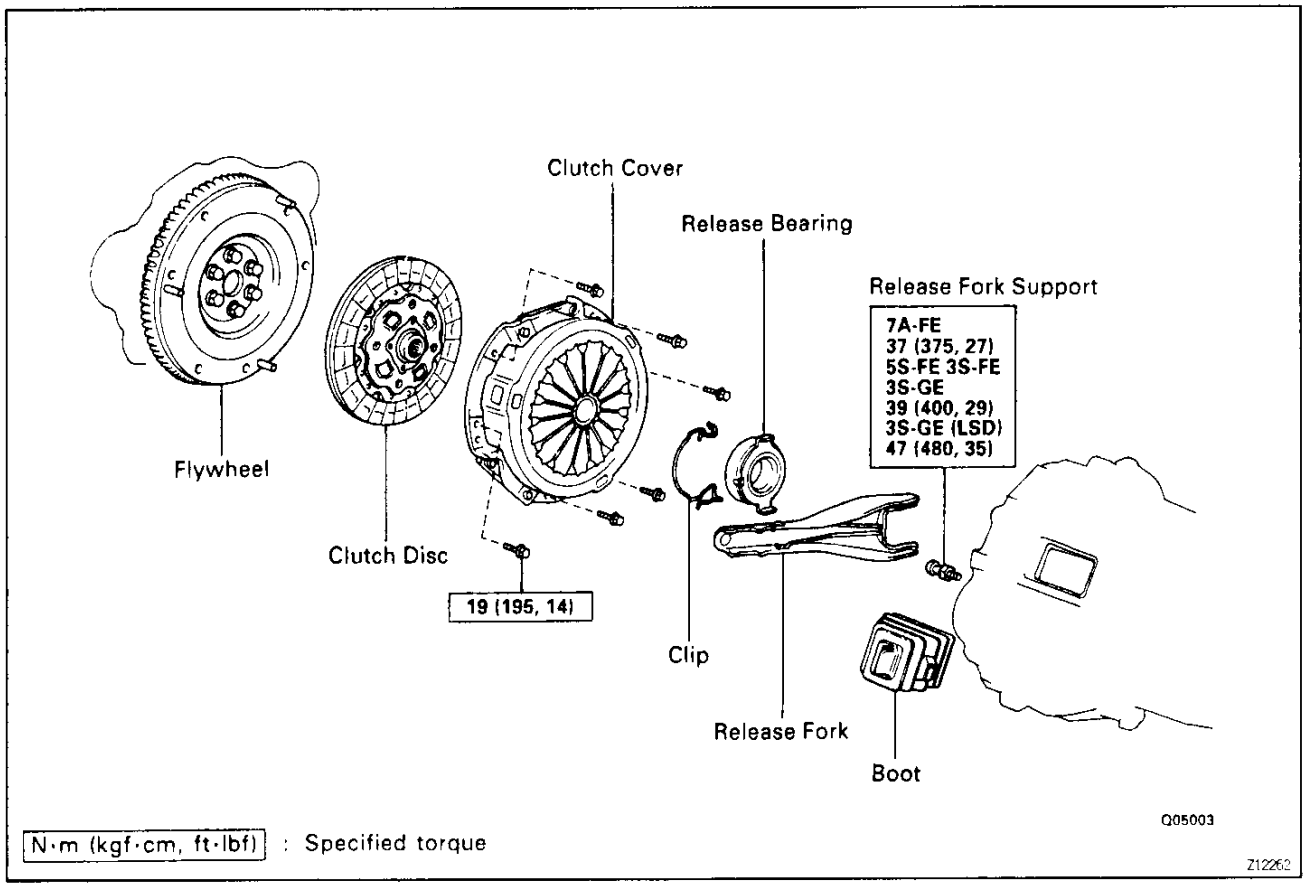

CL08A-02

CLUTCH UNIT REMOVAL

1. **REMOVE TRANSAXLE FROM ENGINE**
   (See page C52 MX−10, S54 MX−8,9, E56 MX−8)

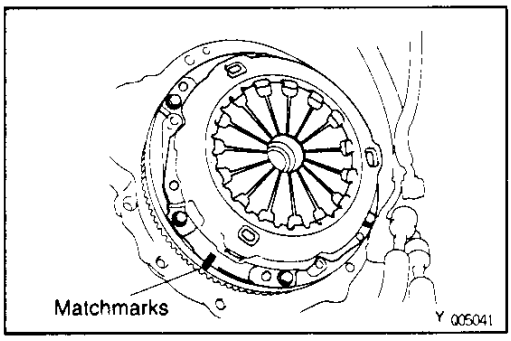

2. **REMOVE CLUTCH COVER AND DISC**
   (a) Place matchmarks on the flywheel and clutch cover.
   (b) Loosen each set bolt one turn at a time until spring tension is released.
   (c) Remove the set bolts, and pull off the clutch cover with the clutch disc.
   NOTICE: Do not drop the clutch disc.

Downloaded from www.Manualslib.com manuals search engine

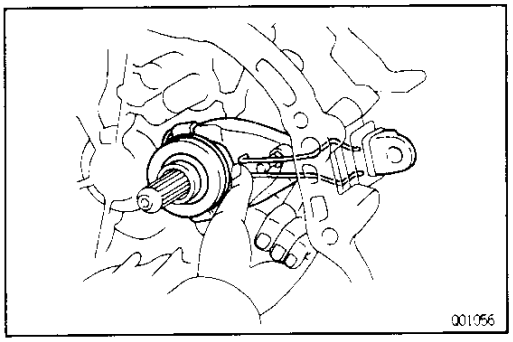

3. REMOVE RELEASE BEARING AND FORK FROM TRANSAXLE

Remove the release bearing together with the fork and then separate them.

CL

CL00M-06

CLUTCH PARTS INSPECTION

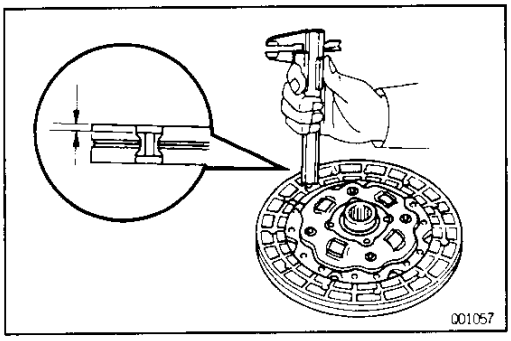

1. INSPECT CLUTCH DISC FOR WEAR OR DAMAGE

Using calipers, measure the rivet head depth.

Minimum rivet depth:

0.3 mm (0.012 in.)

If necessary, replace the clutch disc.

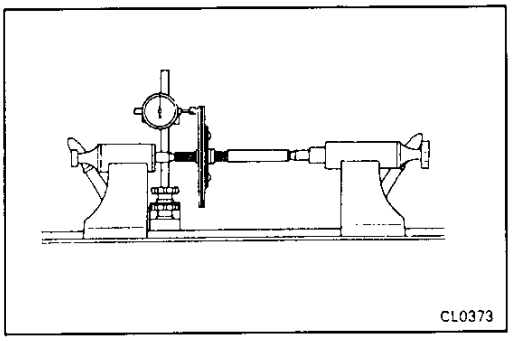

2. INSPECT CLUTCH DISC RUNOUT

Using a dial indicator, check the disc runout.

Maximum runout:

0.8 mm (0.031 in.)

If necessary, replace the clutch disc.

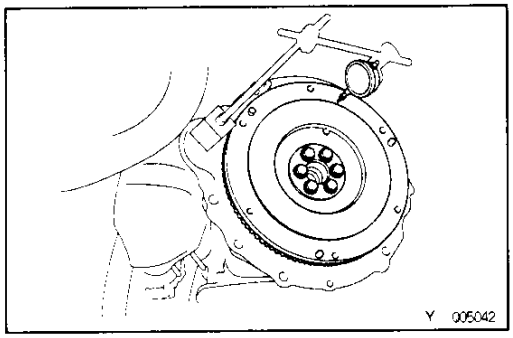

3. INSPECT FLYWHEEL RUNOUT

Using a dial indicator, check the flywheel runout.

Maximum runout:

0.1 mm (0.004 in.)

If necessary, replace the flywheel.

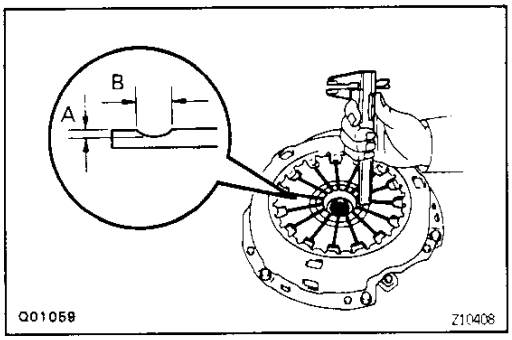

4. INSPECT DIAPHRAGM SPRING FOR WEAR

Using calipers, measure the diaphragm spring for depth and width of wear.

Maximum:

A: Depth

0.6 mm (0.024 in.)

B: Width

5.0 mm (0.197 in.)

If necessary, replace the clutch cover.

Downloaded from www.Manualslib.com manuals search engine

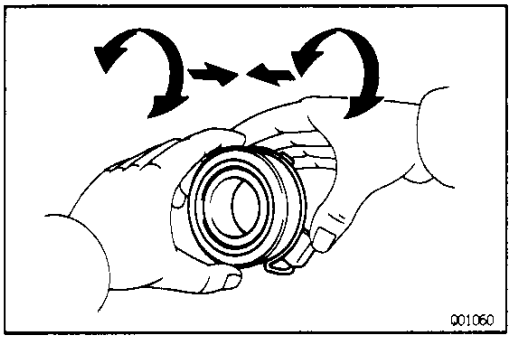

5. **INSPECT RELEASE BEARING**
Turn the bearing by hand while applying force in the axial direction.
HINT: The bearing is permanently lubricated and requires no cleaning or lubrication.
If necessary, replace the release bearing.

CL

CLUTCH UNIT INSTALLATION

CL00H-6A

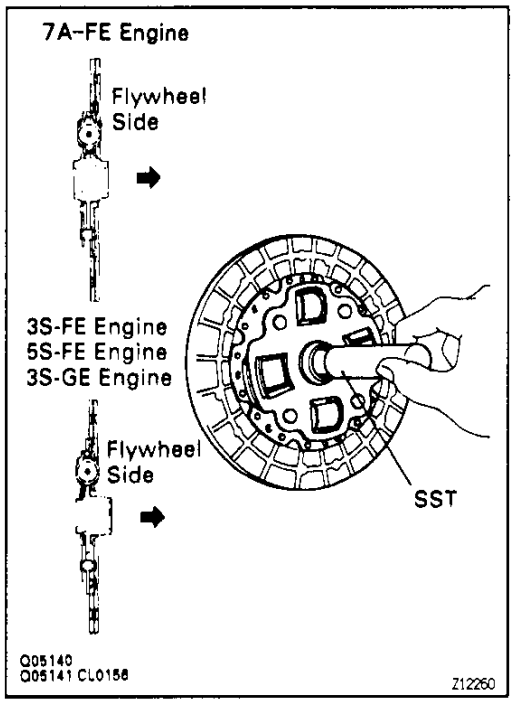

1. **INSTALL CLUTCH DISC AND CLUTCH COVER ON FLYWHEEL**

(a) Insert the SST in the clutch disc, and then set them and the clutch cover in position.
SST 09301–00110 (7A–FE engine)
09301–00210 (3S–FE, 5S–FE, 3S–GE engine)

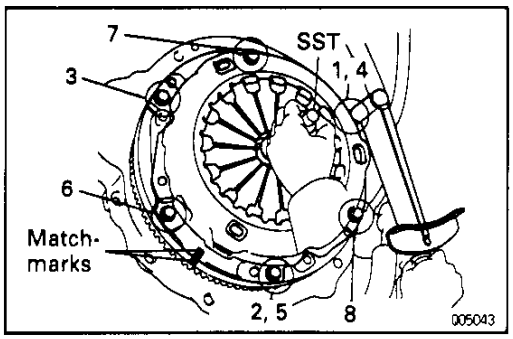

(b) Align the matchmarks on the clutch cover and flywheel.

(c) Torque the bolts on the clutch cover in the order shown.
Torque: 19 N·m (195 kgf·cm, 14 ft·lbf)
HINT: Temporarily tighten the No.1 and No.2 bolts.

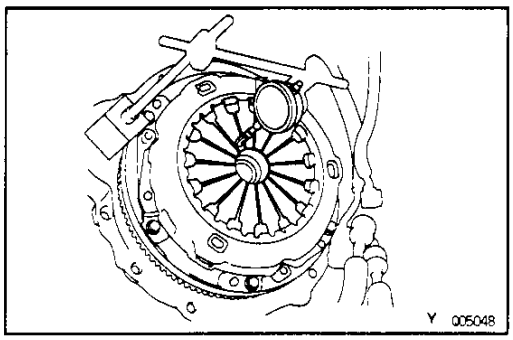

2. **CHECK DIAPHRAGM SPRING TIP ALIGNMENT**
Using a dial indicator with roller instrument, check the diaphragm spring tip alignment.
Maximum non–alignment:
0.5 mm (0.020 in.)

Downloaded from www.Manualslib.com manuals search engine

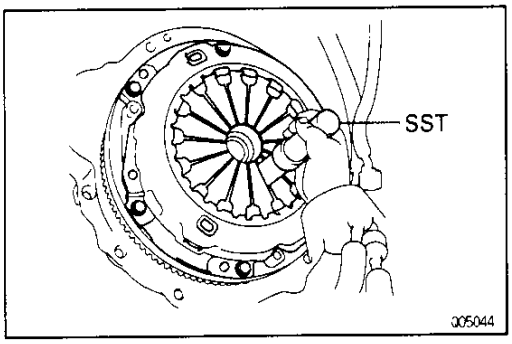

If alignment is not as specified, using SST, adjust the diaphragm spring tip alignment.
SST 09333–00013

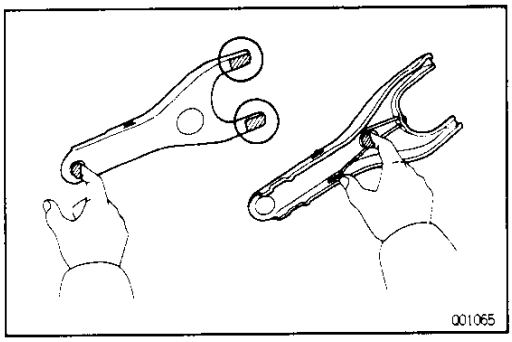

3. APPLY MOLYBDENUM DISULPHIDE LITHIUM BASE GREASE (NLGI NO.2) TO FOLLOWING PARTS

- Release fork and hub contact point
- Release fork and push rod contact point
- Release fork pivot point

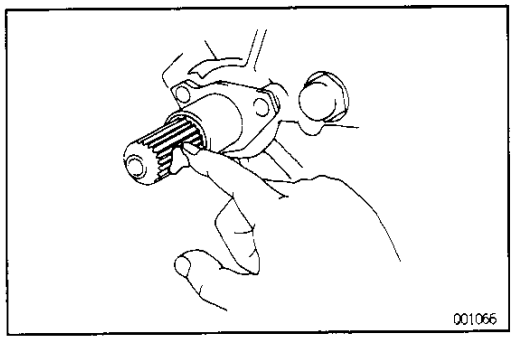

- Clutch disc spline

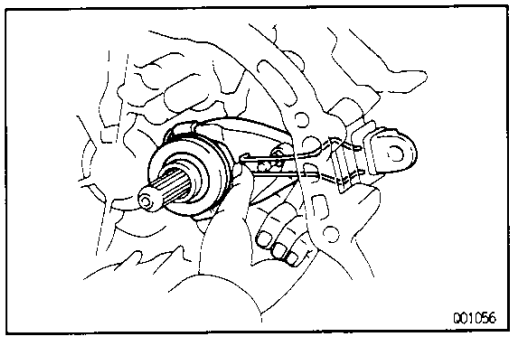

4. INSTALL RELEASE BEARING AND FORK TO TRANSAXLE

Install the bearing to the release fork, and then install them to the transaxle.

5. INSTALL TRANSAXLE TO ENGINE

(See page C52 MX–10, S54 MX–89, E56 MX–8)

Downloaded from www.Manualslib.com manuals search engine

SERVICE SPECIFICATIONS

SERVICE DATA

CL03U-03

Pedal height from asphalt sheet	LHD	144.9 – 154.9 mm (5.705 – 6.098 in.)
Pedal height from asphalt sheet	LHD	141.0 – 151.0 mm (5.551 – 5.945 in.)
Push rod play at pedal top		1.0 – 5.0 mm (0.039 – 0.197 in.)
Pedal freeplay		5.0 – 15.0 mm (0.197 – 0.591 in.)
Clutch release point from pedal full stroke end position		25 mm (0.98 in.) or more
Disc rivet head depth	Minimum	0.3 mm (0.012 in.)
Disc runout	Maximum	0.8 mm (0.031 in.)
Diaphragm spring tip non – alignment	Maximum	0.5 mm (0.020 in.)
Diaphragm spring finger wear	Maximum depth	0.6 mm (0.024 in.)
Diaphragm spring finger wear	Maximum width	5.0 mm (0.197 in.)
Flywheel runout	Maximum	0.1 mm (0.004 in.)

CL00Q-0L

TORQUE SPECIFICATIONS

Part tightened		N·m	kgf·cm	ft·lbf
Clutch line		15	155	11
Master cylinder installation nut		12	120	9
Bleeder plug		8.3	85	74 in.·lbf
Release cylinder installation bolt		12	120	9
Clutch tube clamp		4.9	50	43 in.·lbf
Clutch cover x Flywheel		19	195	14
Release fork support	7A – FE engine	37	375	27
	5S – FE engine	39	400	29
	3S – FE engine	39	400	29
	3S – GE engine	39	400	29
	3S – GE engine (LSD)	47	480	35

Downloaded from www.Manualslib.com manuals search engine

C52 MANUAL TRANSAXLE

DESCRIPTION ..... MX– 2
OPERATION ..... MX– 3
PREPARATION ..... MX– 4
TROUBLESHOOTING ..... MX– 8
PRECAUTION ..... MX– 9
ASSEMBLY REMOVAL AND INSTALLATION ..... MX– 10
COMPONENT PARTS REMOVAL ..... MX– 23
INPUT SHAFT ..... MX– 38
OUTPUT SHAFT ..... MX– 44
SHIFT AND SELECT LEVER SHAFT ..... MX– 51
DIFFERENTIAL CASE ..... MX– 56
COMPONENT PARTS INSTALLATION ..... MX– 64
SHIFT LEVER AND CONTROL CABLE ..... MX– 73
SERVICE SPECIFICATIONS ..... MX– 74

Downloaded from www.Manualslib.com manuals search engine

DESCRIPTION

GENERAL

MX07X-01

- Transaxle type C52 uses constant mesh synchronizers for forward gears, and a sliding mesh reverse gear.
- The input shaft is composed of the 1st and 2nd speed gears and the reverse drive gear, and the output shaft is composed of the drive gear (for use with ring gear).

MX

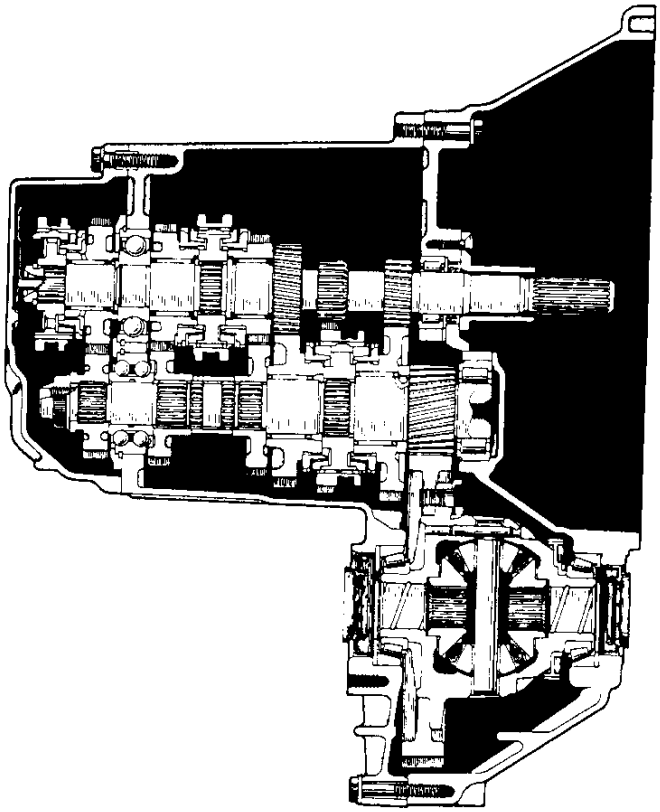

Q04987

V05011

Type of Transaxle		C52
Type of Engine		7A–FE
Gear Ratio	1st Gear	3.166
	2nd Gear	1.904
	3rd Gear	1.310
	4th Gear	0.969
	5th Gear	0.815
	Reverse Gear	3.250
Differential Gear Ratio		4.058
Oil Capacity		2.6 liters (2.7 US qts, 2.3 Imp. qts)
Oil Viscosity		SAE 75W–90
Oil Grade		API GL–4 or GL–5

Downloaded from www.Manualslib.com manuals search engine

OPERATION

MX00E-07

- **The illustrations below show the engagements of the transaxle gears.**

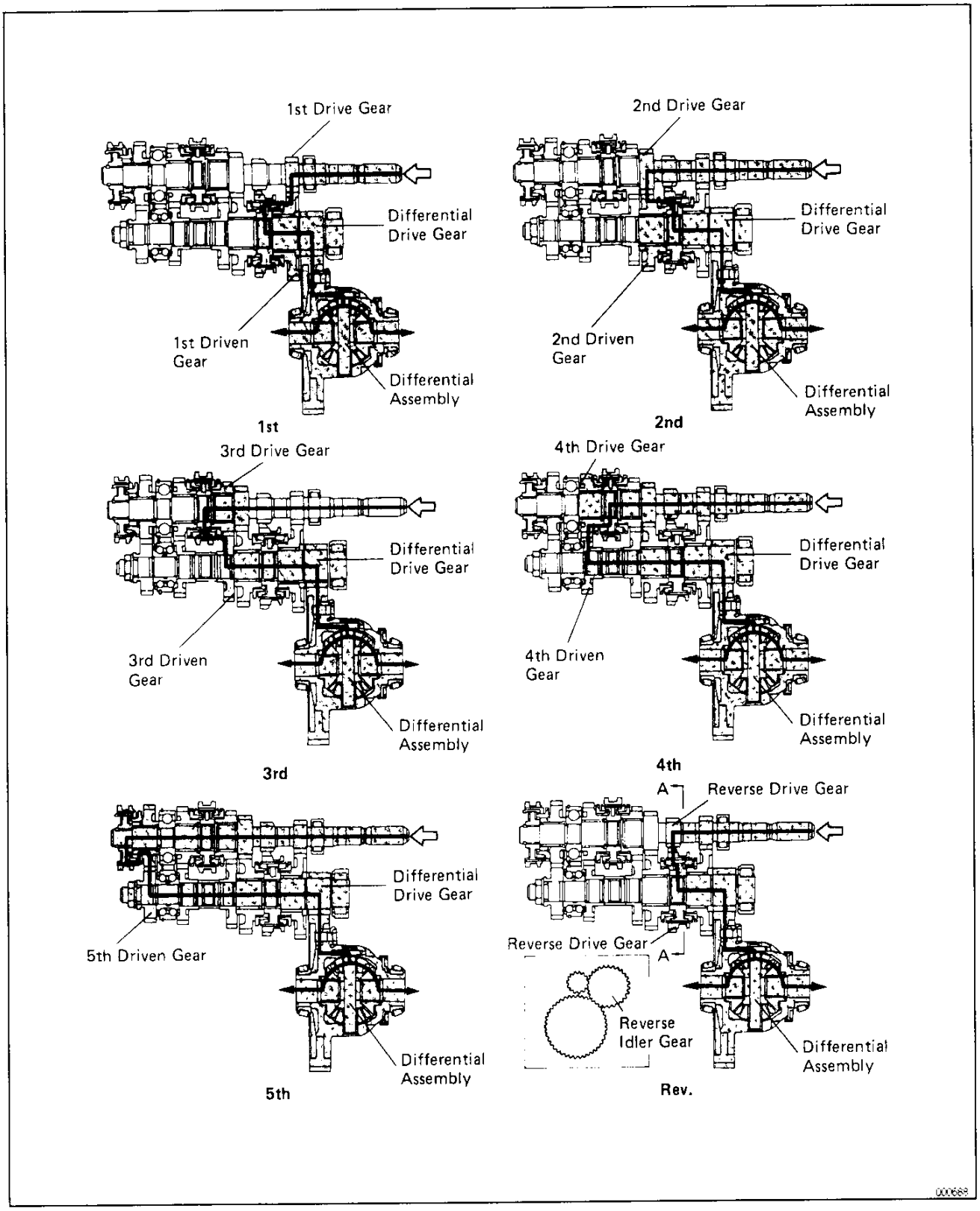

Downloaded from www.Manualslib.com manuals search engine

PREPARATION

MX06E-04

SST (SPECIAL SERVICE TOOLS)

MX

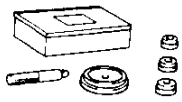	09250-10011	Replacer Set "A"	
	(09253-10010)	Connecting Rod Bushing Remover & Replacer	5th driven gear
	09308-00010	Oil Seal Puller	Output shaft front bearing
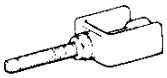	09309-12020	5th Driven Gear Replacer	
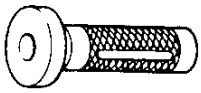	09310-35010	Countershaft Bearing Replacer	Output shaft front bearing
	09316-60010	Transmission & Transfer Bearing Replacer	
	(09316-00020)	Replacer "A"	
	09350-32014	TOYOTA Automatic Transmission Tool Set	Differential side oil seal
	(09351-32111)	Side Bearing Race Replacer	
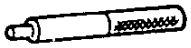	(09351-32130)	Handle	
	(09351-32150)	Oil Seal Replacer	
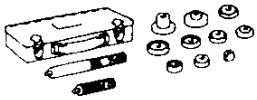	09550-10012	Replacer Set "B"	Differential side bearing
	(09252-10010)	No. 1 Replacer Handle	

Downloaded from www.Manualslib.com manuals search engine

	(09556–10010)	Differential Drive Pinion Front Bearing Remover	
	(09560–10010)	Knuckle Outer Bearing Replacer	
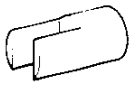	09564–32011	Differential Preload Adaptor	
	09608–12010	Front Hub & Drive Pinion Bearing Replacer Set	Input shaft front bearing Input shaft front oil seal
	(09608–00020)	Remover & Replacer Handle	
	(09608–00030)	Replacer	
	(09608–00080)	Replacer	
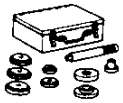	09608–20012	Front Hub & Drive Pinion Bearing Tool Set	Input shaft rear bearing Differential side bearing outer race
	(09608–03020)	Handle	
	(09608–03060)	Replacer	
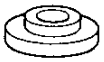	(09608–03070)	Replacer	
	(09608–03090)	Replacer	
	09612–65014	Steering Worm Bearing Puller	Input shaft front bearing Differential side bearing outer race
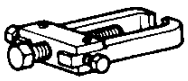	09628–62011	Ball Joint Puller	5th driven gear

MX

Downloaded from www.Manualslib.com manuals search engine

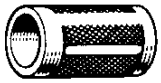	09636–20010	Upper Ball Joint Dust Cover Replacer	No.3 hub sleeve assembly
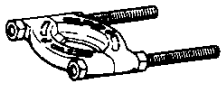	09950–00020	Bearing Remover	
	09950–00030	Bearing Remover Attachment	Differential side bearing
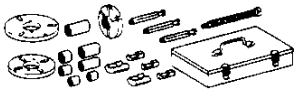	09950–30010	Puller A Set	No. 3 clutch hub
	(09951–03010)	Upper Plate	
	(09953–03010)	Center Bolt	
	(09954–03010)	Arm	

MX

Downloaded from www.Manualslib.com manuals search engine

MX06F-02

RECOMMENDED TOOLS

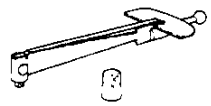	09025-00010	Small Torque Wrench	Differential preload
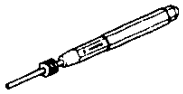	09031-00030	Pin Punch	
	09905-00012	Snap Ring No. 1 Expander	

MX06G-01

EQUIPMENT

Dial indicator with magnetic base	
Feeler gauge	
Micrometer	
Torque wrench	

MX06H-03

LUBRICANT

Item	Capacity	Classification
Manual transaxle oil (w/Differential oil)	2.6 liters (2.7 US qts, 2.3 Imp. qts)	GL-4 or GL-5 SAE 75W-90

MX06J-03

SSM (SPECIAL SERVICE MATERIALS)

08826-00090	Seal Packing 1281, THREE BOND 1281 or equivalent (FIPG)	Transmission case x Transaxle case Transmission case x Case cover
08833-00080	Adhesive 1344, THREE BOND 1344, LOCTITE 242 or equivalent	Transmission case cover bolt Straight screw plug Control shaft cover bolt

MX

Downloaded from www.Manualslib.com manuals search engine

TROUBLESHOOTING

MX000-05

Use the table below to help you find the cause of the problem. The numbers indicate the priority of the likely cause of the problem. Check each part in order. If necessary, replace these parts.

MX

See Page	-	MX-2	-	MX-23	MX-23	MX-23	MX-73	MX-23	MX-23	MX-23	MX-23	MX-38,44	MX-38,44			
Parts Name / Trouble	Oil (Level low)	Oil (Wrong)	Oil (Level too high)	Gasket (Damaged)	Oil seal (Worn or damaged)	O-Ring (Worn or damaged)	Control cable (Faulty)	Locking ball spring (Damaged)	Shift fork (Worn)	Gear (Worn or damaged)	Bearing (Worn or damaged)	Synchronizer ring (Worn or damaged)	Shifting key spring (Damaged)			
Noise	1	2								3	3					
Oil leakage			1	2	2	3										
Hard to shift or will not shift							1					2	3			
Jumps out of gear								1	2	3	3					

V00019

Downloaded from www.Manualslib.com manuals search engine

PRECAUTION

MT07Q-01

When working with FIPG material, you must observe the following.

- **Using a razor blade and gasket scraper, remove all the old FIPG material from the gasket surfaces.**
- **Thoroughly clean all components to remove all the loose material.**
- **Clean both sealing surfaces with a non—residue solvent.**
- **Apply the seal packing in an approx. 1 mm (0.04 in.) wide bead along the sealing surface.**
- **Part must be assembled within 10 minutes of application. Otherwise, the FIPG material must be removed and reapplied.**

Downloaded from www.Manualslib.com manuals search engine

ASSEMBLY REMOVAL AND INSTALLATION

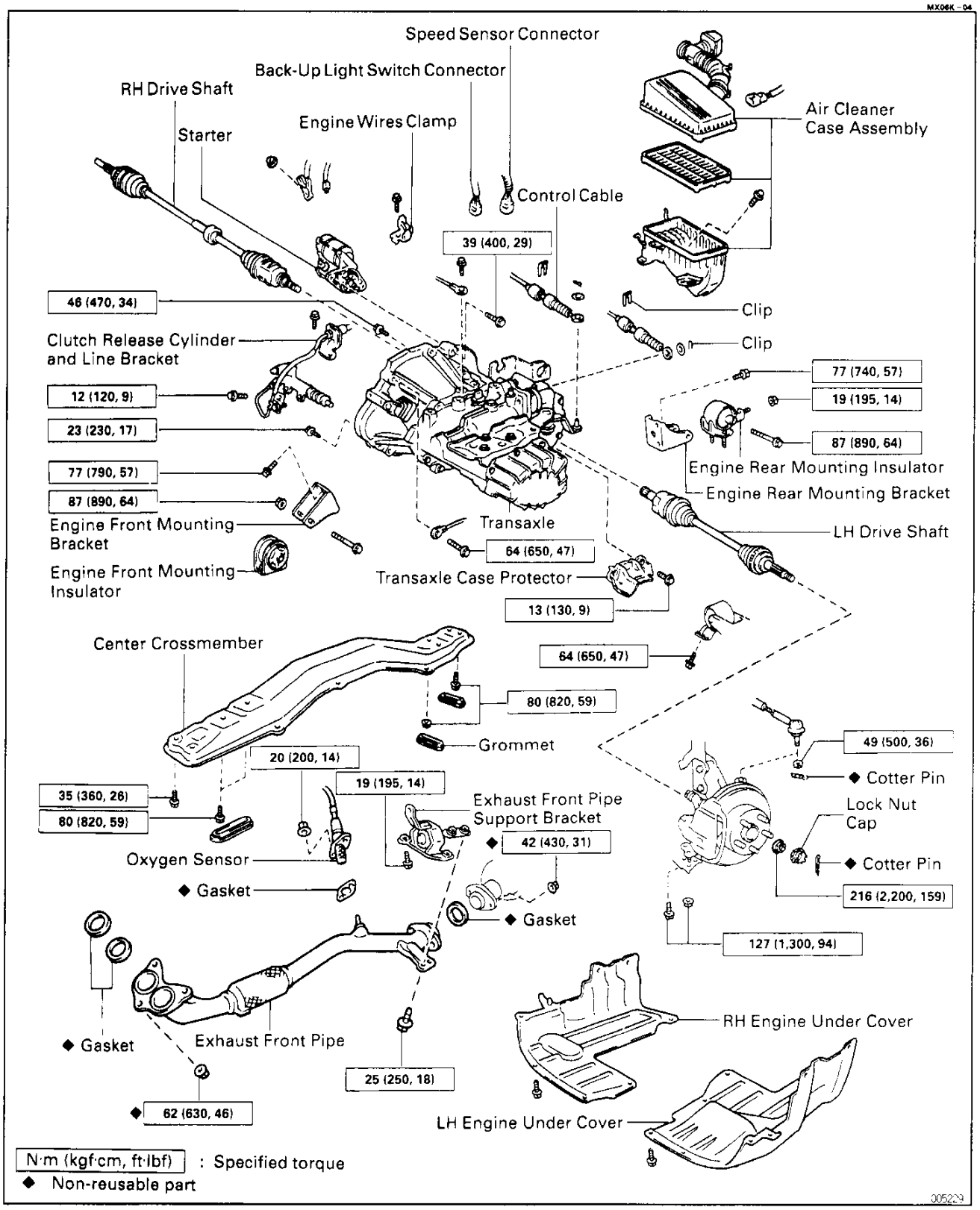

Downloaded from www.Manualslib.com manuals search engine

MX07Y-02

TRANSAXLE REMOVAL

1. **DISCONNECT NEGATIVE (–) TERMINAL CABLE FROM BATTERY**

   CAUTION: Work must be started after 90 seconds from the time the ignition switch is turned to the "LOCK" position and the negative (–) terminal cable is disconnected from the battery.

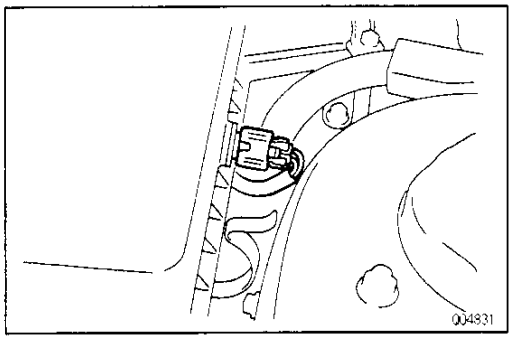

2. **REMOVE AIR CLEANER CASE ASSEMBLY WITH AIR HOSE**

(a) Disconnect the intake air temp. sensor connector.

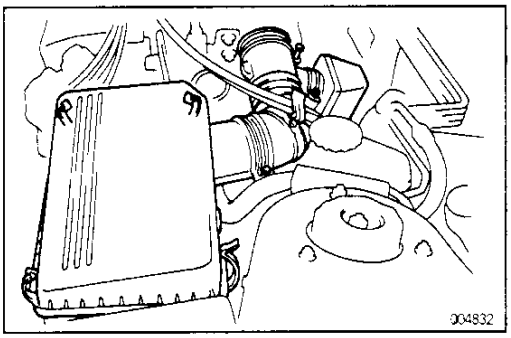

(b) Loosen the bolt and disconect the air cleaner hose from the throttle body.

(c) Disconnect the 4 air cleaner cap clips.

(d) Remove the air cleaner cap and element.

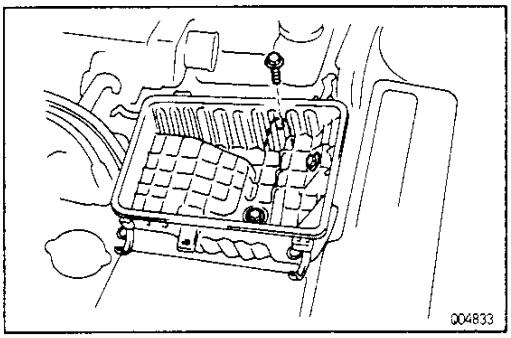

(e) Remove the 3 bolts and air cleaner case.

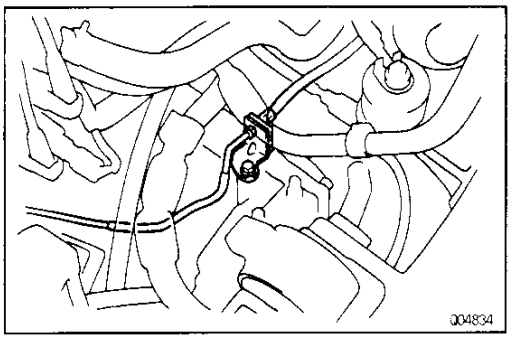

3. **REMOVE CLUTCH RELEASE CYLINDER LINE BRACKET AND RELEASE CYLINDER**

(a) Remove the bolt and clutch release cylinder line bracket.

Downloaded from www.Manualslib.com manuals search engine

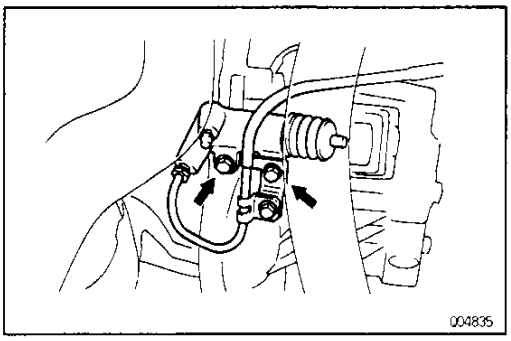

(b) Remove the 2 bolts and clutch release cylinder.

MX

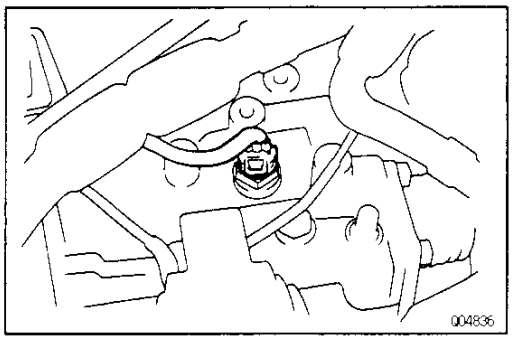

4. DISCONNECT BACK–UP LIGHT SWITCH CONNECTOR

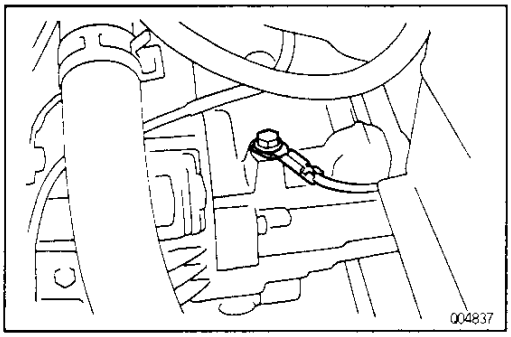

5. REMOVE GROUND CABLE

Remove the bolt and ground cable from the transaxle.

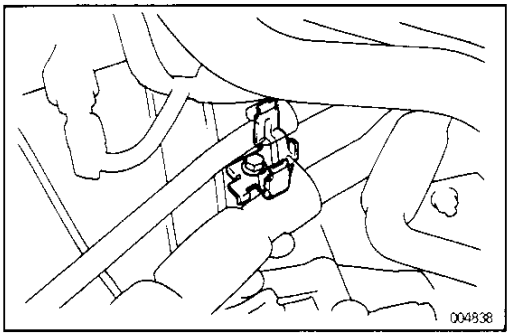

6. REMOVE ENGINE WIRES CLAMP

Remove the bolt and engine wires clamp from the transaxle.

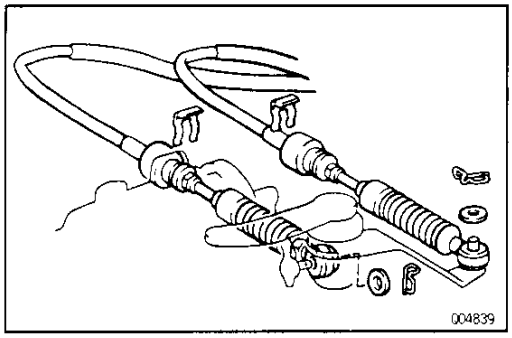

7. DISCONNECT CONTROL CABLES

(a) Remove the 2 clips and washers.
(b) Remove the 2 clips from the cables.
(c) Disconnect the 2 control cables from the control lever housing support bracket.

Downloaded from www.Manualslib.com manuals search engine

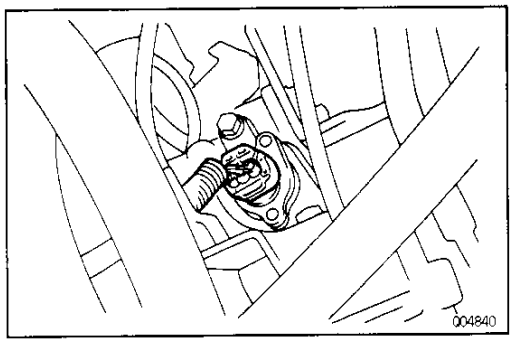

8. DISCONNECT SPEED SENSOR CONNECTOR

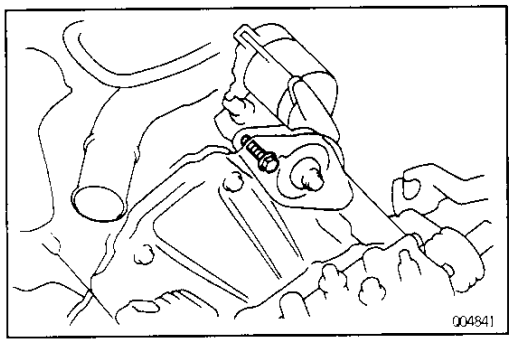

9. REMOVE STARTER'S SET BOLT

Remove the starter's set bolt from the transaxle upper side.

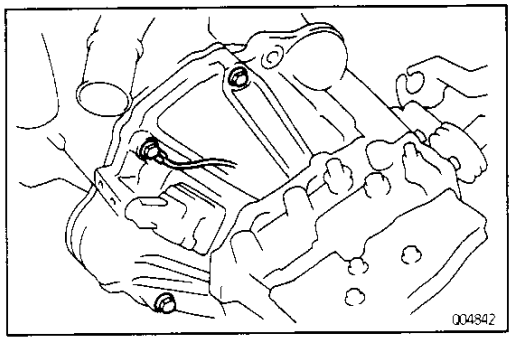

10. REMOVE TRANSAXLE UPPER SIDE MOUNTING BOLTS

Remove the 3 transaxle mounting bolts.

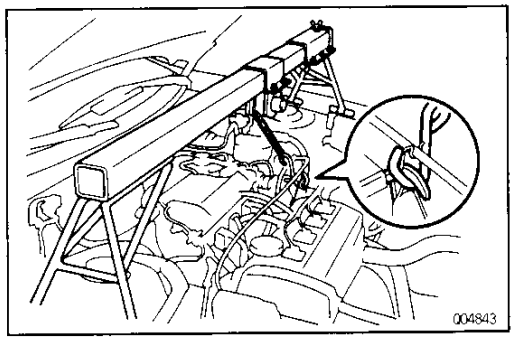

11. INSTALL ENGINE SUPPORT FIXTURE

12. REMOVE FRONT WHEELS

13. RAISE VEHICLE

NOTICE: Be sure the vehicle is securely supported.

14. REMOVE UNDER COVERS

15. DRAIN TRANSAXLE OIL

16. REMOVE LEFT AND RIGHT DRIVE SHAFTS

(See page SA–76)

Downloaded from www.Manualslib.com manuals search engine

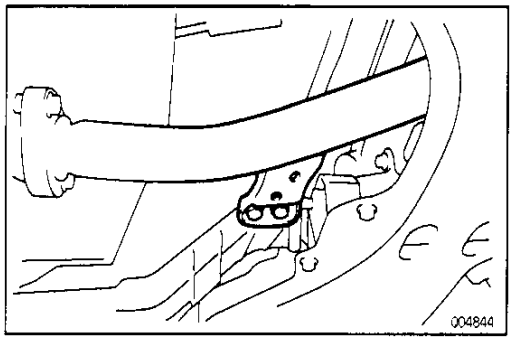

17. REMOVE EXHAUST FRONT PIPE, SUPPORT BRACKET AND OXYGEN SENSOR

(a) Remove the 2 bolts from the exhaust front pipe support bracket.

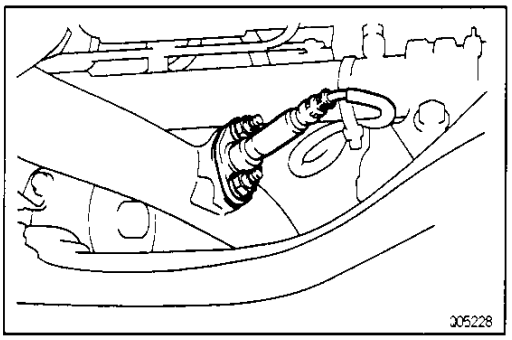

(b) Remove the 2 nuts, oxygen sensor and gasket.

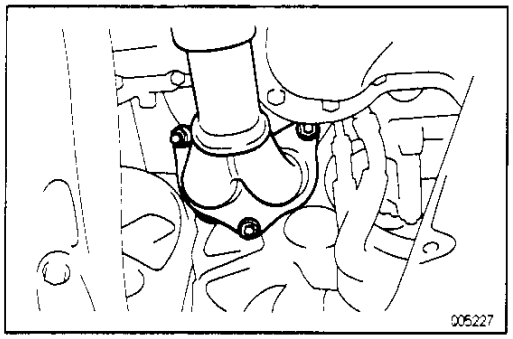

(c) Remove the 3 nuts and 2 gaskets from the exhaust manifold.

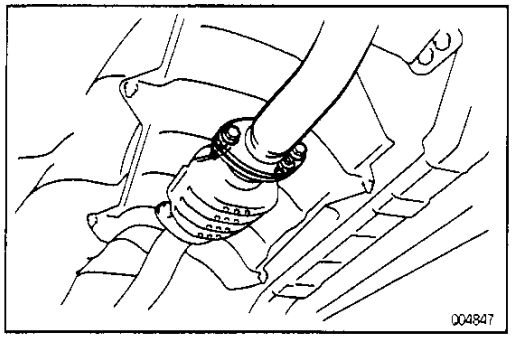

(d) Remove the 2 bolts and nuts.
(e) Remove the gasket and exhaust front pipe.

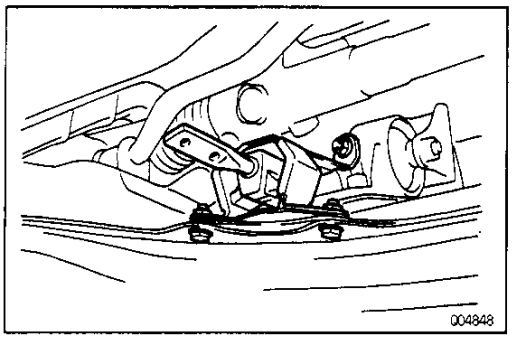

(f) Remove the 2 bolts from the suspension member.
(g) Remove the nut from the engine rear mounting insulator.
(h) Remove the front pipe support bracket.

Downloaded from www.Manualslib.com manuals search engine

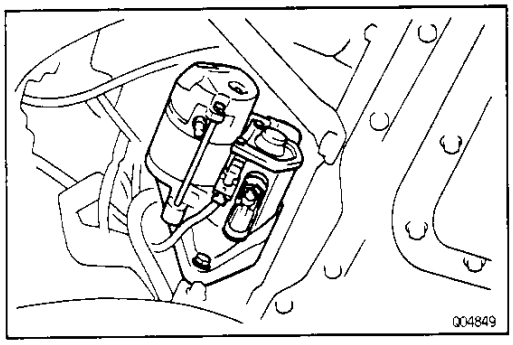

18. REMOVE STARTER

(a) Disconnect the connector and wire from the starter.
(b) Remove the starter's set bolt from the lower side.
(c) Remove the starter.

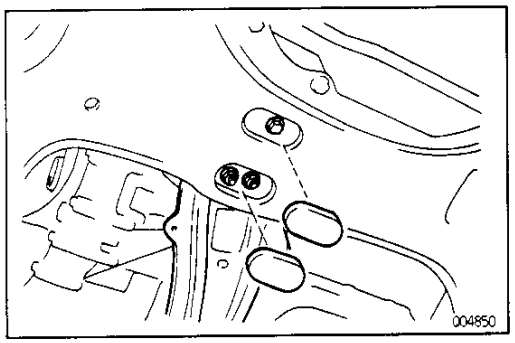

19. REMOVE CENTER CROSSMEMBER

(a) Remove the 2 grommets.
(b) Remove the engine rear mounting insulator's set bolt and 2 nuts.

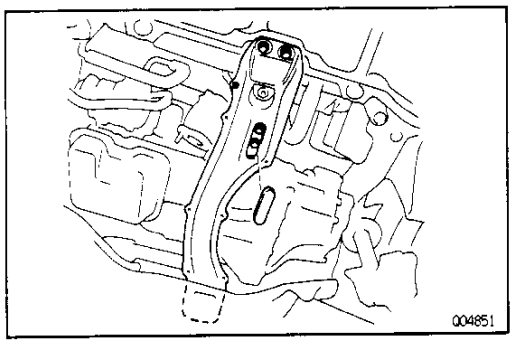

(c) Remove the grommet.
(d) Remove the engine front mounting insulator's 2 set bolts.
(e) Remove the 2 bolts and center crossmember.

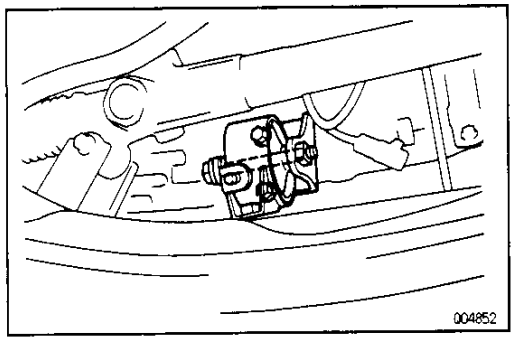

20. REMOVE ENGINE REAR MOUNTING BRACKET AND INSULATOR

Remove the 3 bolts, engine rear mounting bracket and insulator.

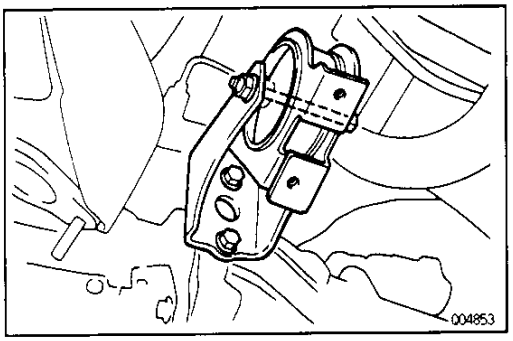

21. REMOVE ENGINE FRONT MOUNTING BRACKET AND INSULATOR

(a) Remove the bolt, nut and engine front mounting insulator.
(b) Remove the 2 bolts and engine front mounting bracket.

Downloaded from www.Manualslib.com manuals search engine

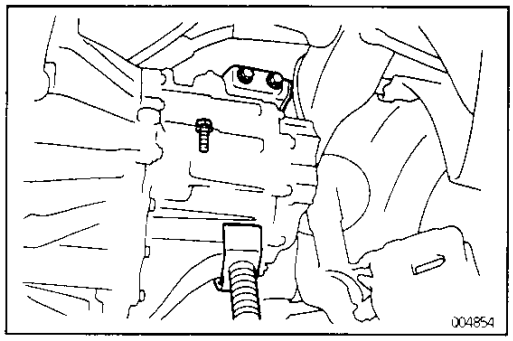

22. DISCONNECT ENGINE LEFT MOUNTING BRACKET FROM ENGINE LEFT MOUNTING INSULATOR

(a) Raise the transaxle and engine left side slightly with a jack.

(b) Remove the engine left mounting bracket and insulator's 3 set bolts.

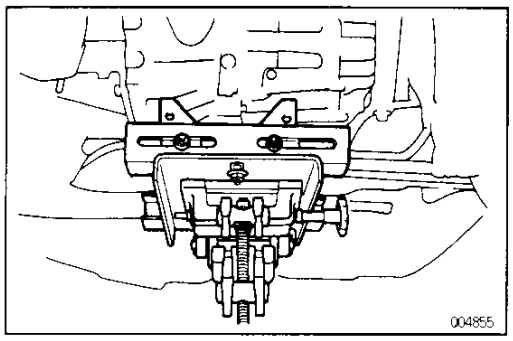

23. JACK UP TRANSAXLE SLIGHTLY

Using a transmission jack, support the transaxle.

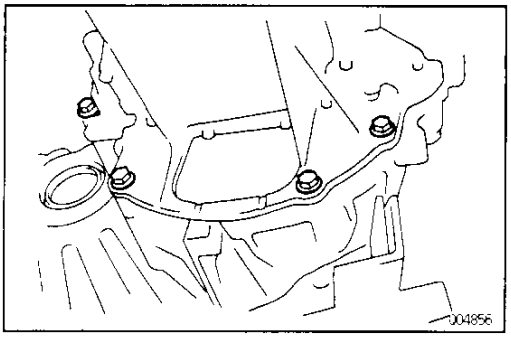

24. REMOVE TRANSAXLE MOUNTING BOLTS FROM ENGINE REAR END PLATE SIDE

Remove the 4 transaxle mounting bolts.

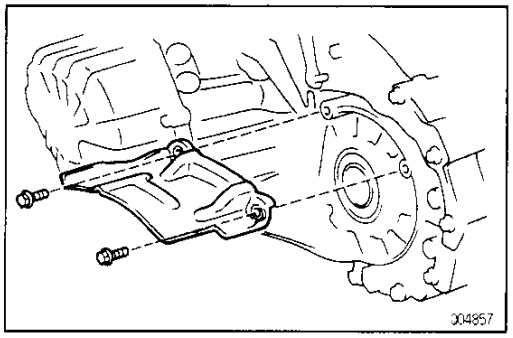

25. REMOVE TRANSAXLE CASE PROTECTOR

Remove the 2 bolts and transaxle case protector.

26. REMOVE TRANSAXLE

Lower the engine left side and remove the transaxle from the engine.

Downloaded from www.Manualslib.com manuals search engine

MX07Z-02

TRANSAXLE INSTALLATION

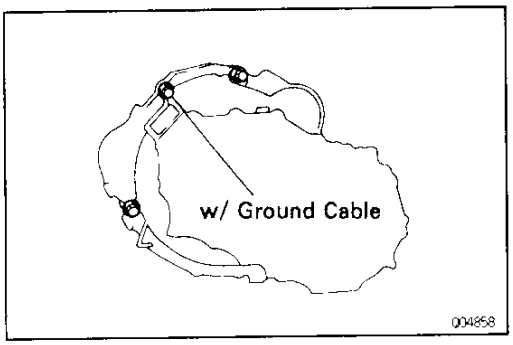

1. INSTALL TRANSAXLE

(a) Raise the engine right side.

(b) Align the input shaft spline with the clutch disc and install the transaxle to the engine.

(c) Torque the 3 transaxle mounting bolts from the upper side.

Torque: 64 N·m (650 kgf·cm, 47 ft·lbf)

MX

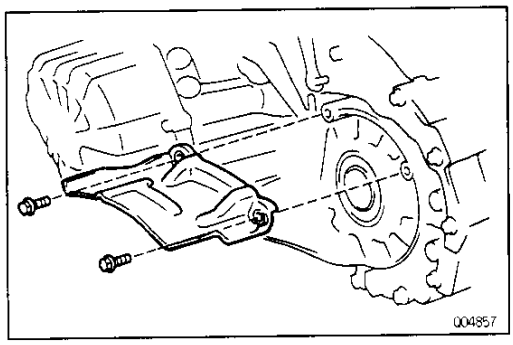

2. INSTALL TRANSAXLE CASE PROTECTOR

Install and torque the transaxle case protector's 2 set bolts.

Torque: 13 N·m (130 kgf·cm, 9 ft·lbf)

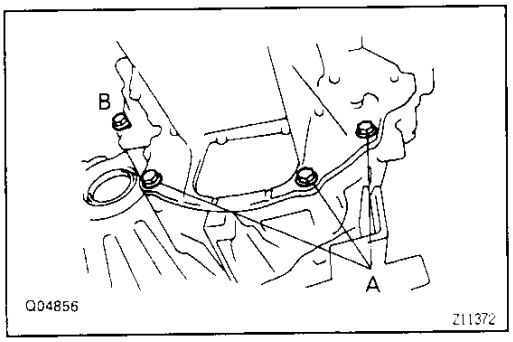

3. INSTALL AND TORQUE TRANSAXLE MOUNTING BOLTS TO ENGINE REAR END PLATE SIDE

Install and torque the 4 transaxle mounting bolts.

Torque:

Bolt A 23 N·m (230 kgf·cm, 17 ft·lbf)

Bolt B 46 N·m (470 kgf·cm, 34 ft·lbf)

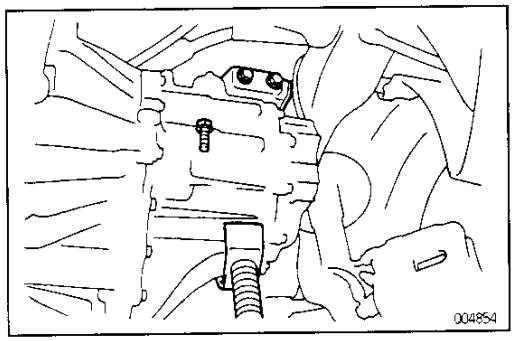

4. CONNECT ENGINE LEFT MOUNTING BRACKET TO ENGINE LEFT MOUNTING INSULATOR

(a) Raise the transaxle and engine left side slightly with a jack.

(b) Install and torque the engine left mounting bracket and insulator's 3 set bolts.

Torque: 64 N·m (650 kgf·cm, 47 ft·lbf)

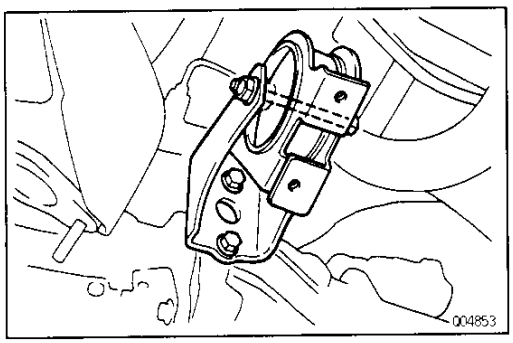

5. INSTALL ENGINE FRONT MOUNTING BRACKET AND INSULATOR

(a) Install the engine front mounting bracket and torque the 2 bolts.

Torque: 77 N·m (790 kgf·cm, 57 ft·lbf)

(b) Install the engine front mounting insulator and torque the bolt and nut.

Torque: 87 N·m (890 kgf·cm, 64 ft·lbf)

Downloaded from www.Manualslib.com manuals search engine

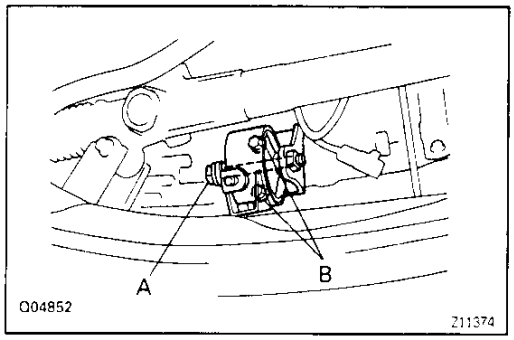

6. INSTALL ENGINE REAR MOUNTING BRACKET AND INSULATOR

Install and torque the engine rear mounting bracket and insulator's 3 set bolts.

Torque:

Bolt A 87 N·m (890 kgf·cm, 64 ft·lbf)

Bolt B 77 N·m (790 kgf·cm, 57 ft·lbf)

MX

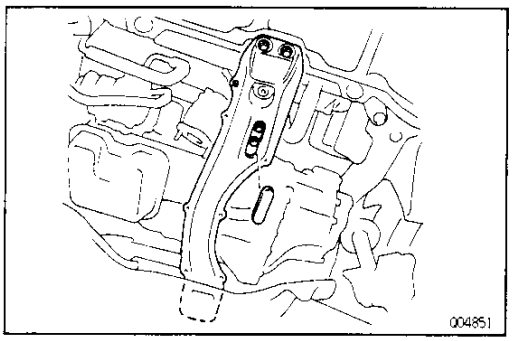

7. INSTALL CENTER CROSSMEMBER

(a) Install the center crossmember.

(b) Install and torque the 2 bolts.

Torque: 35 N·m (360 kgf·cm, 26 ft·lbf)

(c) Install and torque the engine front mounting insulator's 2 set bolts.

Torque: 80 N·m (820 kgf·cm, 59 ft·lbf)

(d) Install the grommet.

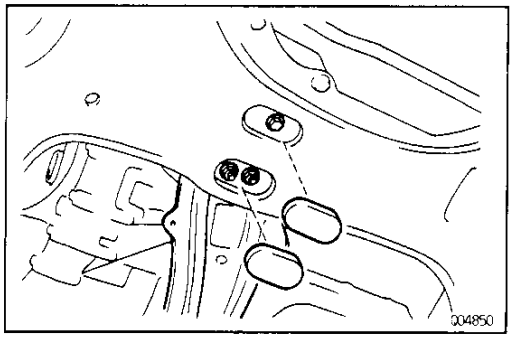

(e) Install and torque the engine rear mounting insulator's set bolt and 2 nuts.

Torque: 80 N·m (820 kgf·cm, 59 ft·lbf)

(f) Install the 2 grommets.

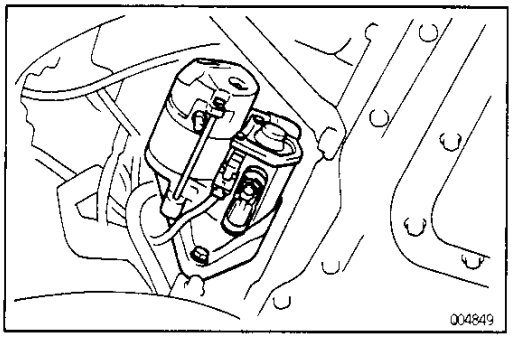

8. INSTALL STARTER

(a) Install the starter.

(b) Install and torque the starter's set bolt to the lower side.

Torque: 39 N·m (400 kgf·cm, 29 ft·lbf)

(c) Connect the connector and wire to the starter.

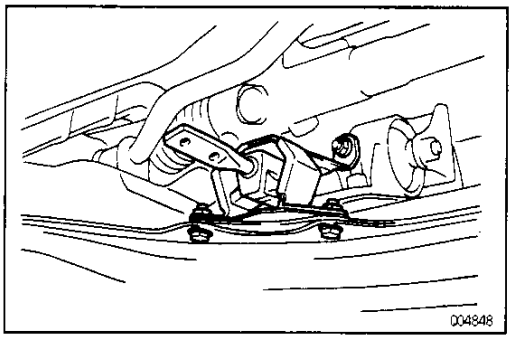

9. INSTALL EXHAUST FRONT PIPE, SUPPORT BRACKET AND OXYGEN SENSOR

(a) Install the exhaust front pipe support bracket.

(b) Install and torque the nut to the engine rear mounting insulator.

Torque: 19 N·m (195 kgf·cm, 14 ft·lbf)

(c) Install and torque the 2 bolts to the suspension member.

Torque: 19 N·m (195 kgf·cm, 14 ft·lbf)

Downloaded from www.Manualslib.com manuals search engine

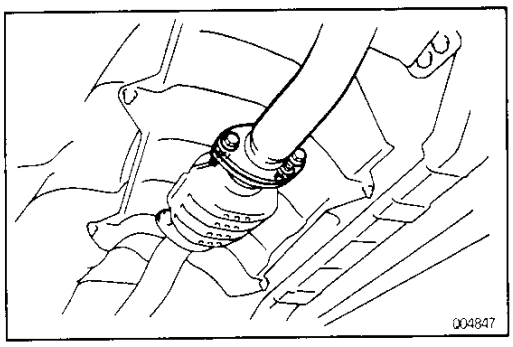

(d) Install the exhaust front pipe.

(e) Install and torque the 2 bolts and 2 new nuts with a new gasket.
Torque: 42 N·m (430 kgf·cm, 31 ft·lbf)

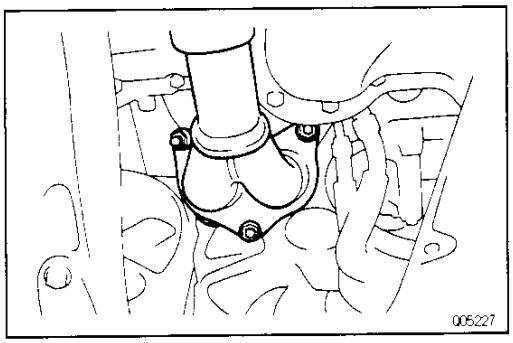

(f) Install and torque 3 new nuts with 2 new gaskets to the exhaust monifold.
Torque: 62 N·m (630 kgf·cm, 46 ft·lbf)

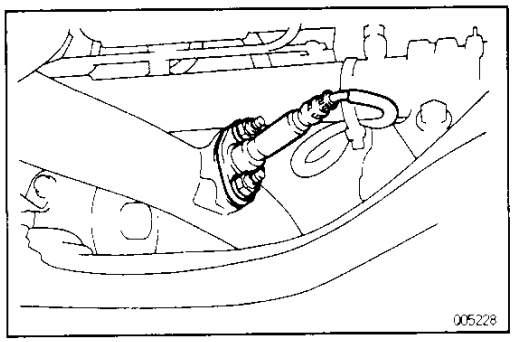

(g) Install the oxygen sensor with a new gasket.

(h) Install and torque the 2 nuts.
Torque: 20 N·m (200 kgf·cm, 14 ft·lbf)

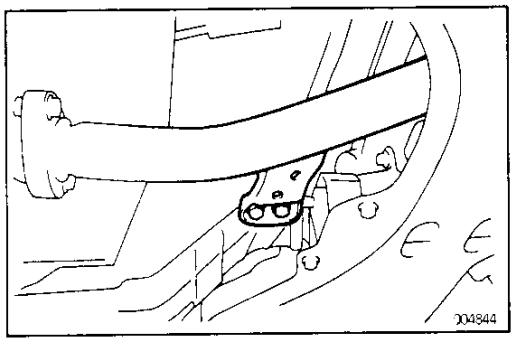

(i) Install and torque the 2 bolts to the exhaust front pipe support bracket.
Torque: 25 N·m (250 kgf·cm, 18 ft·lbf)

10. INSTALL LEFT AND RIGHT DRIVE SHAFTS
(See page SA–82)

11. FILL TRANSAXLE WITH GEAR OIL

Oil grade:
API GL–4 or GL–5

Viscosity:
SAE 75W–90

Capacity:
2.6 liters (2.7 US qts, 2.3 Imp. qts)

Downloaded from www.Manualslib.com manuals search engine

12. **INSTALL UNDER COVERS**
13. **INSTALL FRONT WHEELS AND LOWER VEHICLE**
14. **REMOVE ENGINE SUPPORT FIXTURE**

MX

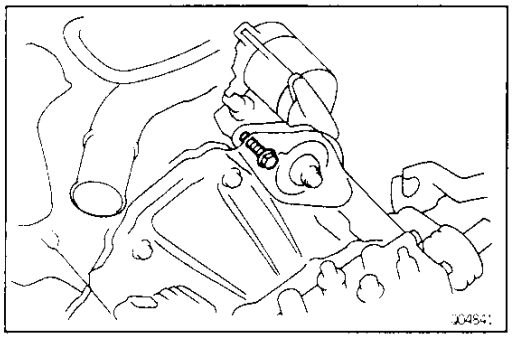

15. **INSTALL AND TORQUE STARTER'S SET BOLT**
    Install and torque the starter's set bolt to the transaxle upper side.
    Torque: 39 N·m (400 kgf·cm, 29 ft·lbf)

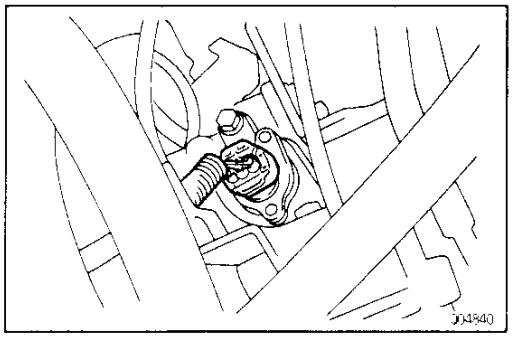

16. **CONNECT SPEED SENSOR CONNECTOR**

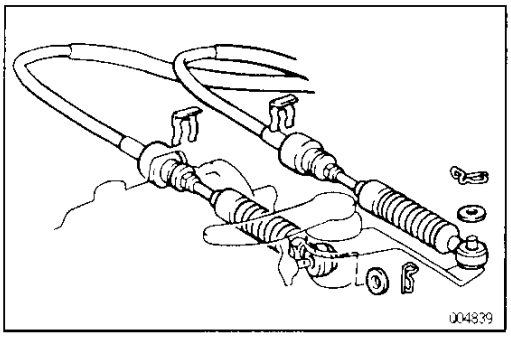

17. **CONNECT CONTROL CABLES**
    (a) Connect the 2 control cables to the control lever housing.
    (b) Install the 2 clips to the cables.
    (c) Install the 2 clips and washers.

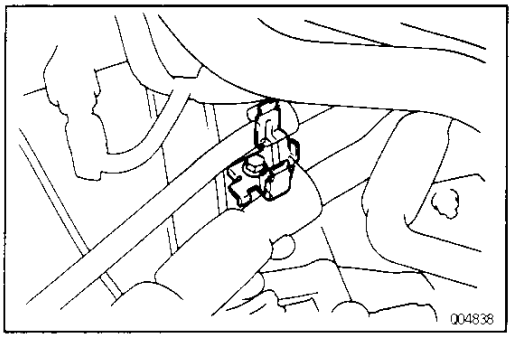

18. **INSTALL ENGINE WIRES CLAMP**
    Install and torque the engine wires clamp's set bolt to the transaxle.

Downloaded from www.Manualslib.com manuals search engine

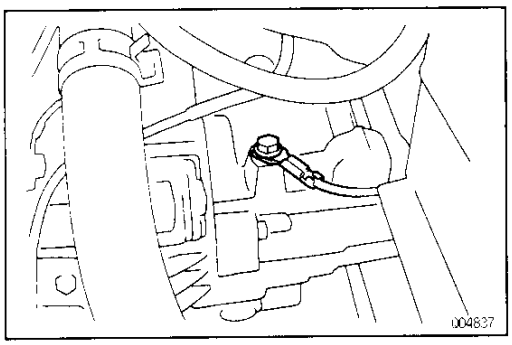

19. INSTALL GROUND CABLE

Install and torque the ground cable's set bolt to the transaxle.

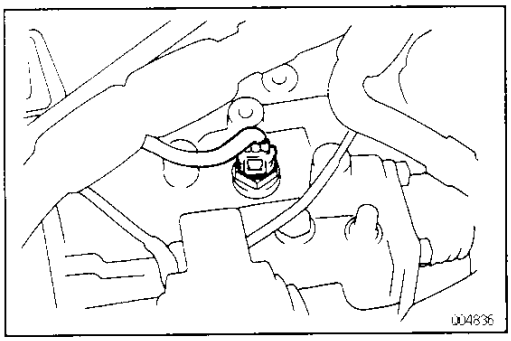

20. CONNECT BACK – UP LIGHT SWITCH CONNECTOR

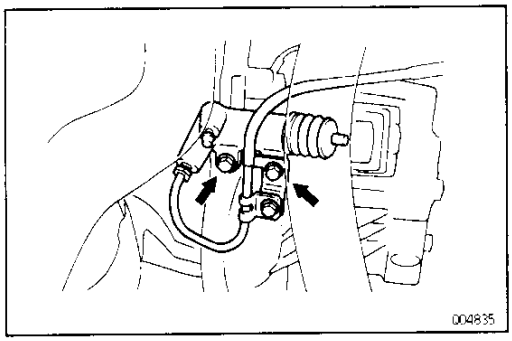

21. INSTALL CLUTCH RELEASE CYLINDER AND LINE BRACKET

(a) Place the clutch release cylinder and torque the 2 bolts.

Torque: 12 N·m (120 kgf·cm, 9 ft·lbf)

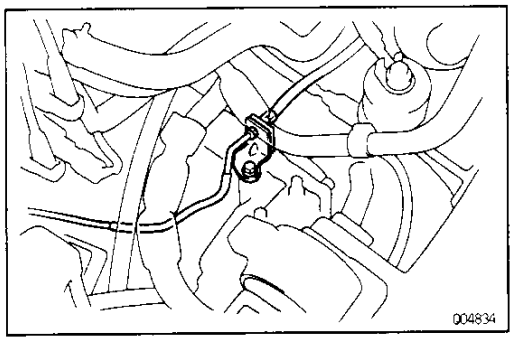

(b) Install and torque the clutch release cylinder line bracket's set bolt to the transaxle.

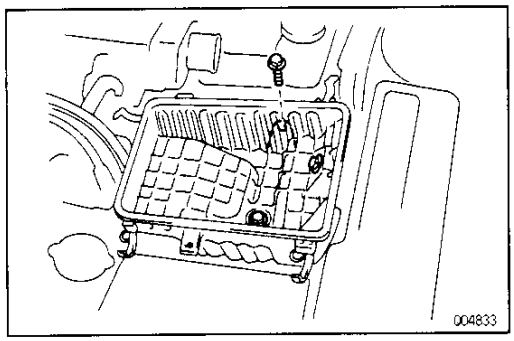

22. INSTALL AIR CLEANER CASE ASSEMBLY WITH AIR HOSE

(a) Install and torque the air cleaner case's 3 set bolts.

Downloaded from www.Manualslib.com manuals search engine

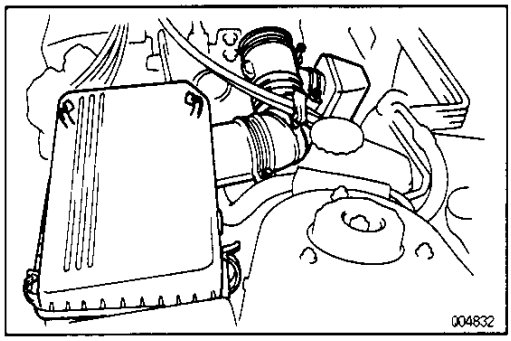

(b) Install the air cleaner element and cap.
(c) Connect the 4 air cleaner cap clips.
(d) Torque the bolt and connect the air cleaner hose to the throttle body.

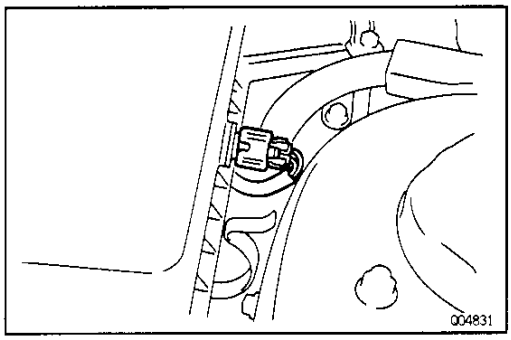

(e) Connect the intake air temp. sensor connector.

23. CONNECT NEGATIVE (–) TERMINAL CABLE TO BATTERY

24. INSPECT FRONT WHEEL ALIGNMENT
(See page SA–7)

25. PERFORM ROAD TEST
Check for abnormal noises and smooth shifting.

Downloaded from www.Manualslib.com manuals search engine

COMPONENT PARTS REMOVAL

MX06W-03

COMPONENTS

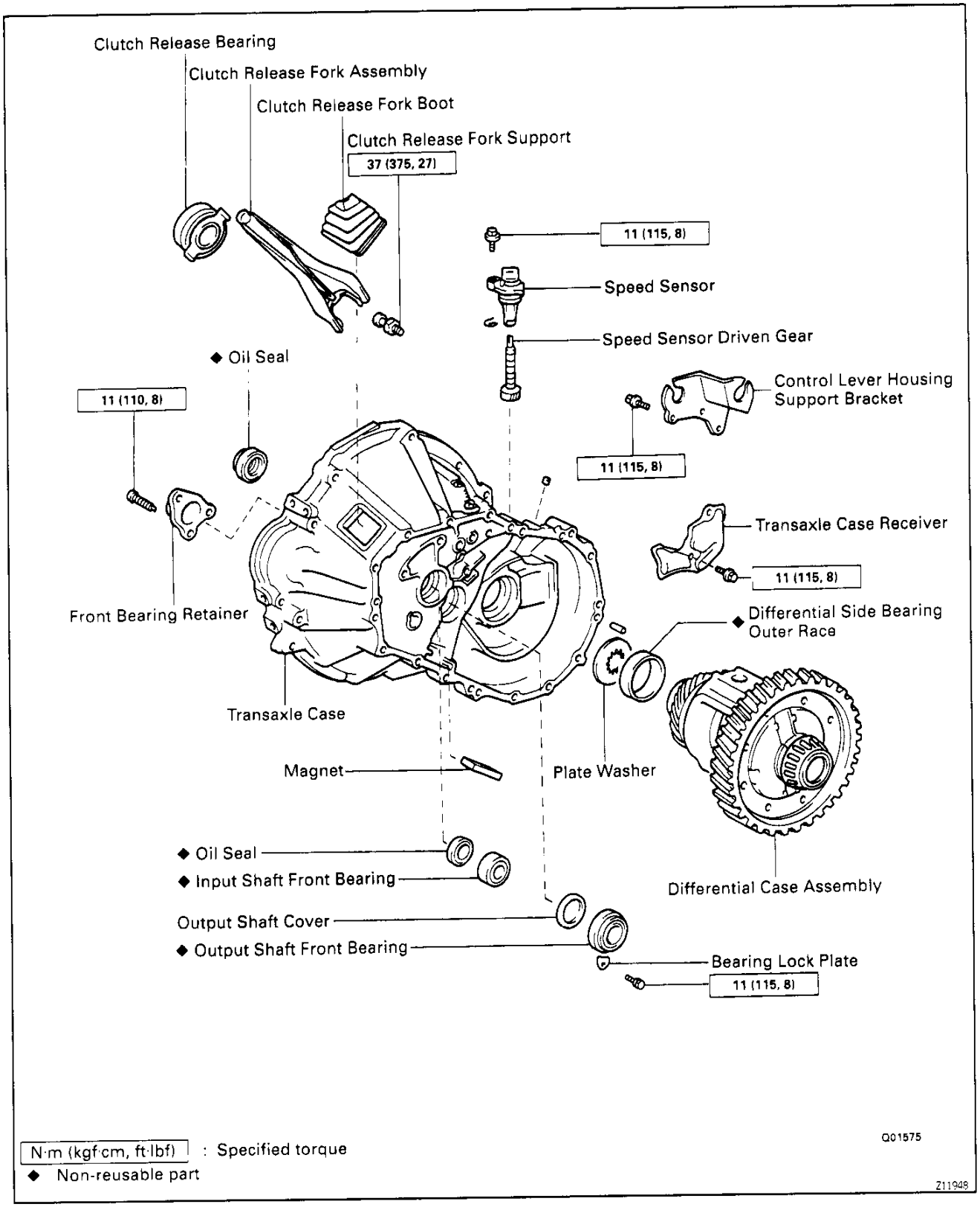

Downloaded from www.Manualslib.com manuals search engine

C52 MANUAL TRANSAXLE — COMPONENT PARTS REMOVAL

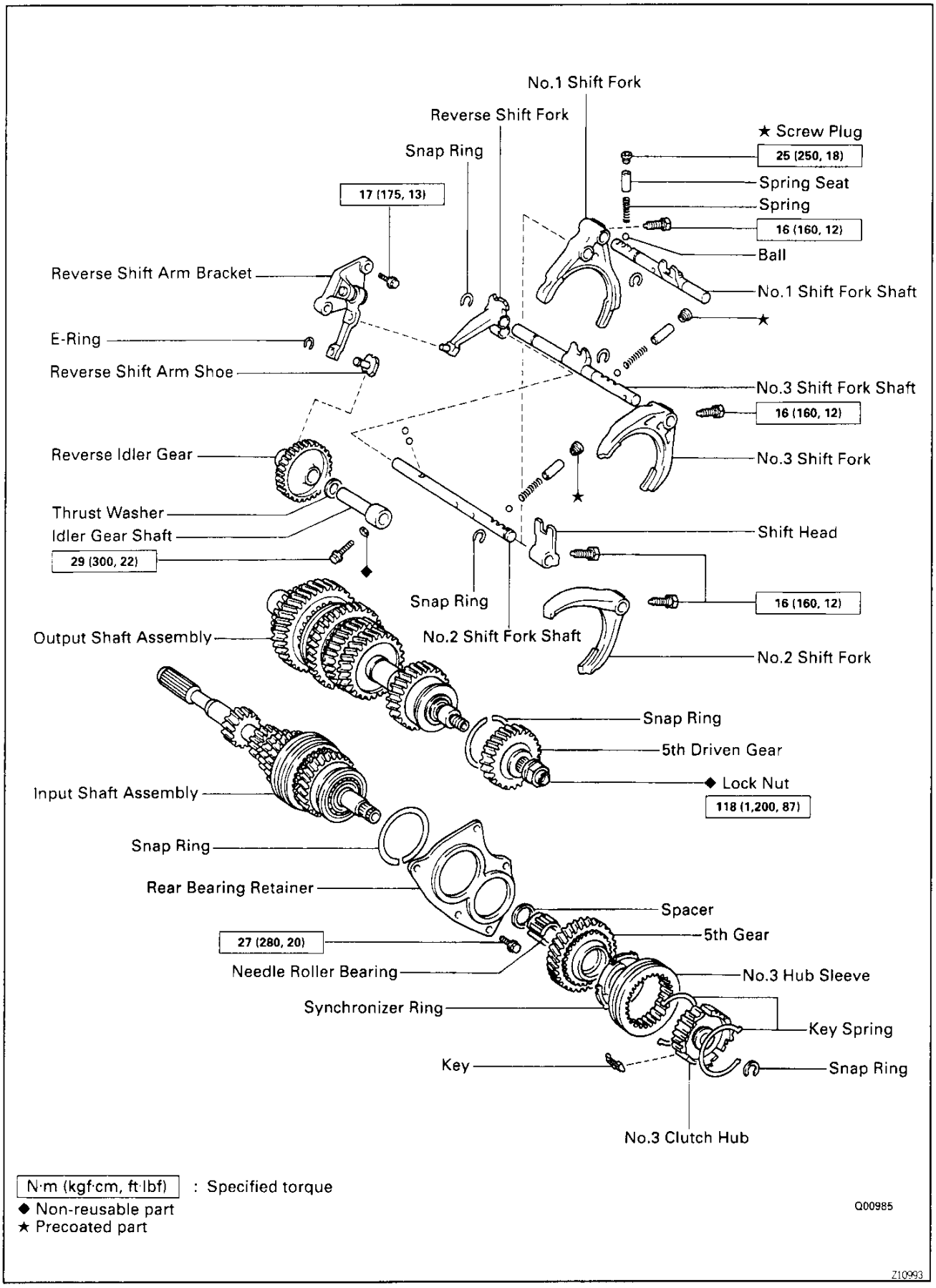

Downloaded from www.Manualslib.com manuals search engine

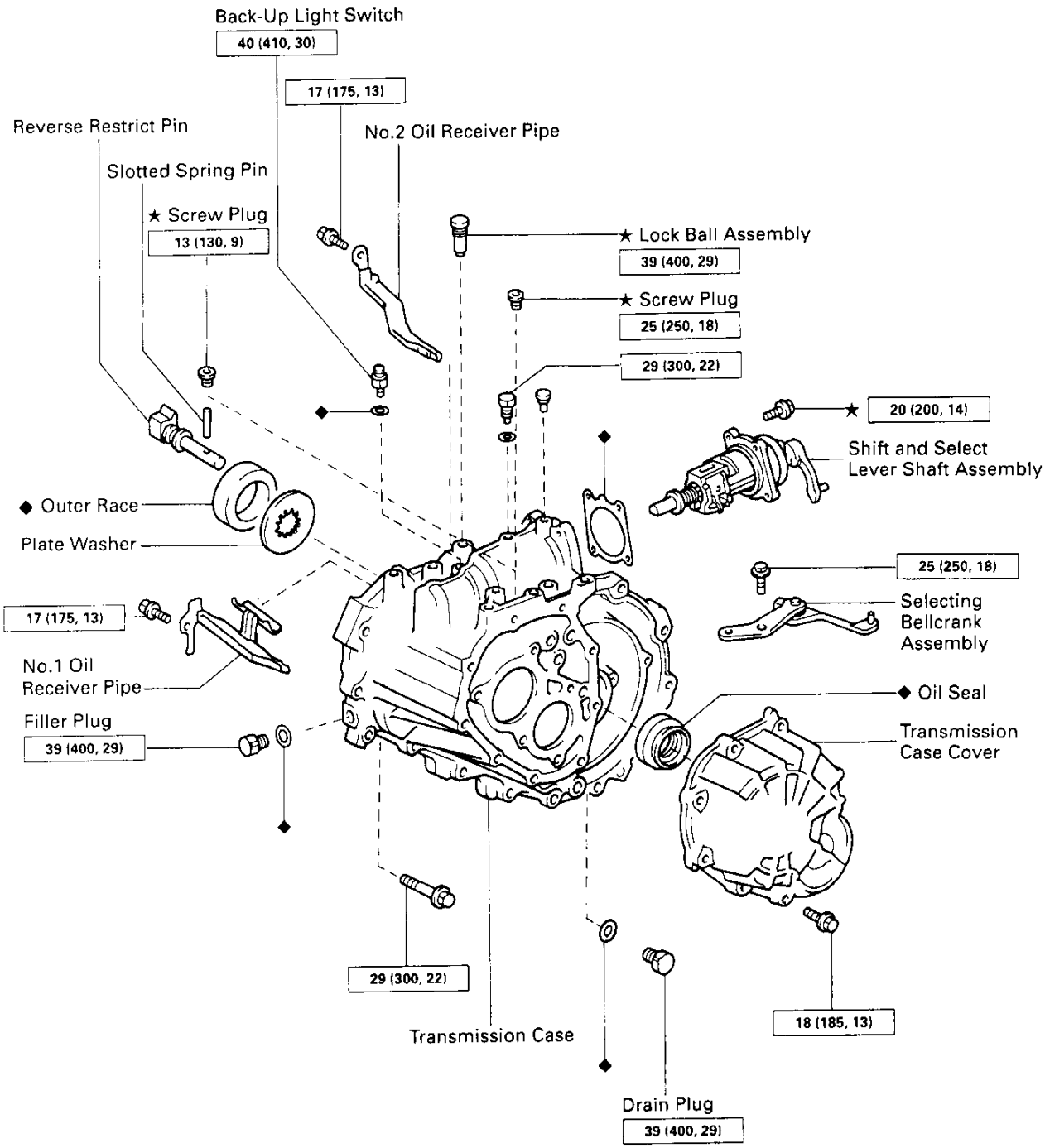

N·m (kgf·cm, ft·lbf) : Specified torque
◆ Non-reusable part
★ Precoated part

Q00986

Z10994

Downloaded from www.Manualslib.com manuals search engine

MX080-02

BASIC SUBASSEMBLY SEPARATION

1. **REMOVE CLUTCH RELEASE FORK AND BEARING**
2. **REMOVE SPEED SENSOR**
3. **REMOVE BACK–UP LIGHT SWITCH**
4. **REMOVE SELECTING BELLCRANK ASSEMBLY**

MX

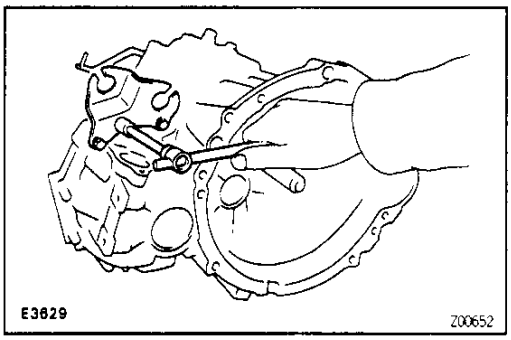

5. **REMOVE CONTROL LEVER HOUSING SUPPORT BRACKET**
   Remove the 3 bolts and control lever housing support bracket.

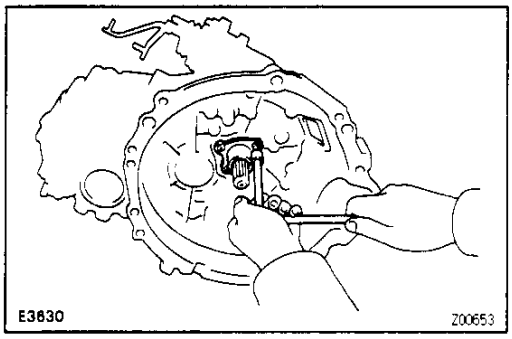

6. **REMOVE FRONT BEARING RETAINER**
   Using a torx wrench, remove the 3 torx screws and front bearing retainer.
   (Torx wrench T30 09042–00010)

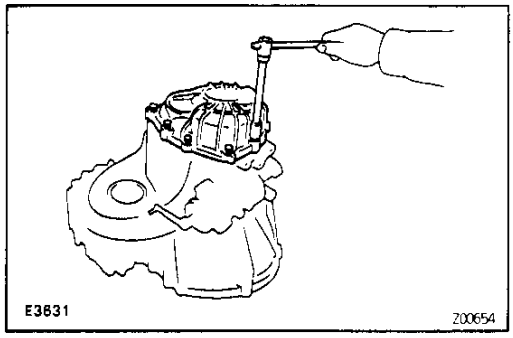

7. **REMOVE TRANSMISSION CASE COVER**
   (a) Remove the 9 bolts.

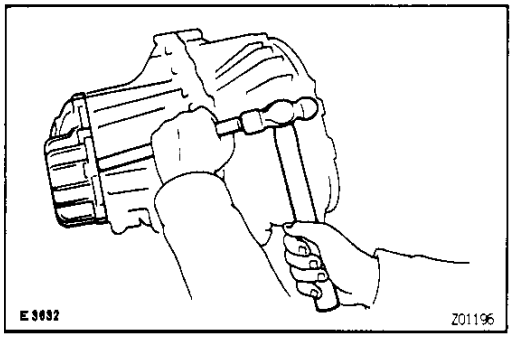

   (b) Carefully tap the projection of the transmission case cover with a brass bar and hammer to remove the transmission case cover from the transmission case, and remove the transmission case cover.

Downloaded from www.Manualslib.com manuals search engine

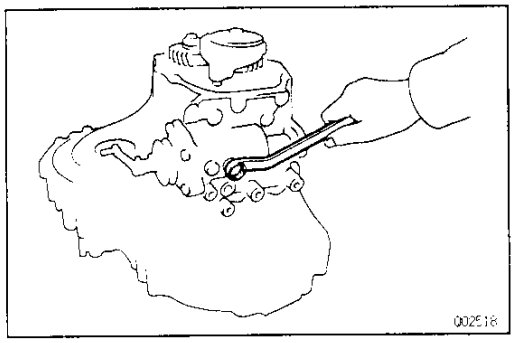

8. REMOVE SHIFT AND SELECT LEVER SHAFT ASSEMBLY

(a) Remove the lock bolt.

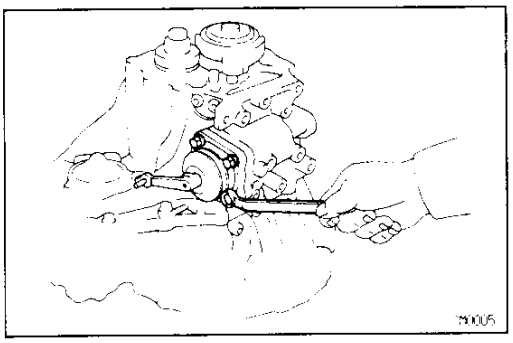

(b) Remove the 4 bolts and pull out the shift and select lever shaft assembly.

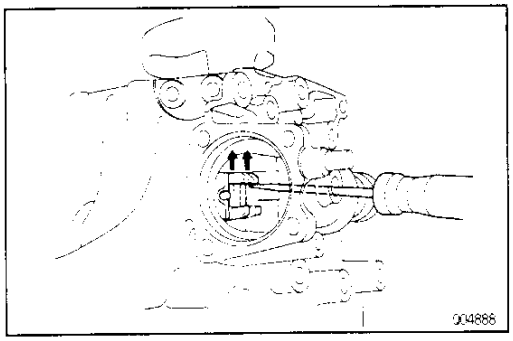

9. REMOVE LOCK NUT

(a) Using a screwdriver, engage the gear double meshing.

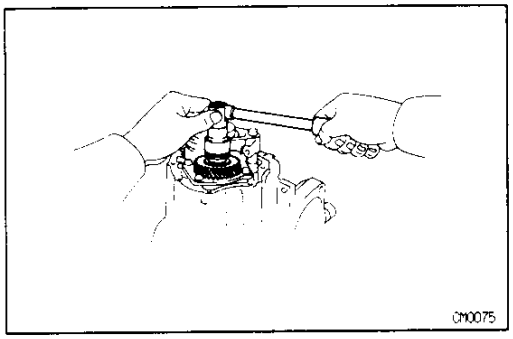

(b) Using a hammer and chisel, loosen the staked part of the nut.

(c) Remove the lock nut.

(d) Using a screwdriver, disengage the gear double meshing.

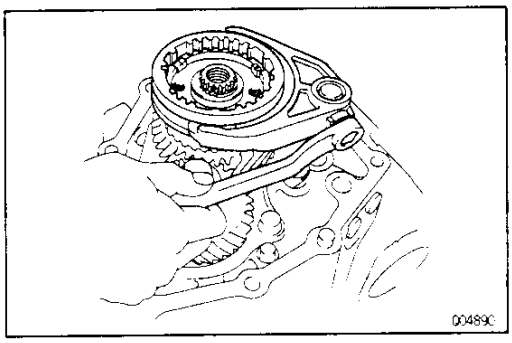

10. REMOVE NO. 3 HUB SLEEVE AND NO. 3 SHIFT FORK

(a) Remove the bolt from the No.3 shift fork.

(b) Remove the No.3 hub sleeve and shift fork.

Downloaded from www.Manualslib.com manuals search engine

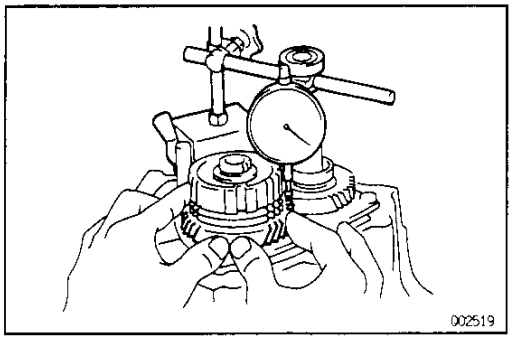

11. INSPECT 5TH GEAR THRUST CLEARANCE

Using a dial indicator, measure the thrust clearance.

Standard clearance:

0.10—0.57 mm (0.0039—0.0224 in.)

Maximum clearance:

0.65 mm (0.0256 in.)

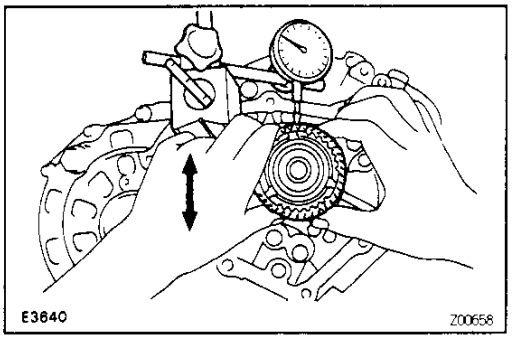

12. INSPECT 5TH GEAR RADIAL CLEARANCE

Using a dial indicator, measure the radial clearance.

Standard clearance:

0.015—0.058 mm (0.0006—0.0023 in.)

Maximum clearance:

0.070 mm (0.0028 in.)

If the clearance exceeds the maximum, replace the gear, needle roller bearing or shaft.

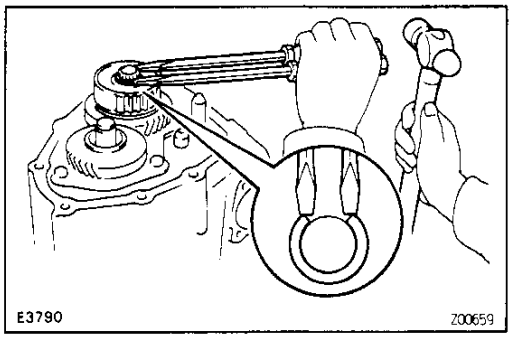

13. REMOVE NO.3 CLUTCH HUB AND 5TH GEAR

(a) Using 2 screwdrivers and a hammer, tap out the snap ring.

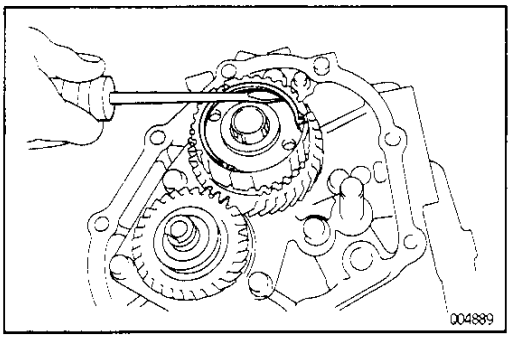

(b) Using a screwdriver, remove the key spring.

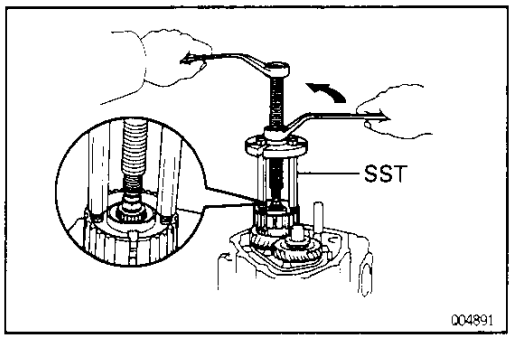

(c) Install a bolt and washer to the tip of the input shaft and using SST, remove the No.3 clutch hub.
SST 09950—30010 (09951—03010, 09953—03010, 09954—03010)

NOTICE: Select a bolt whose outer diameter is smaller than the screw hole of the input shaft so that it can be turned easily.

(d) Remove the synchronizer ring, 5th gear and needle roller bearing.

Downloaded from www.Manualslib.com manuals search engine

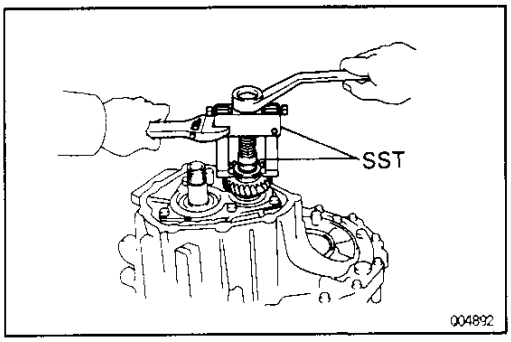

14. REMOVE 5TH DRIVEN GEAR

Using SST, remove the 5th driven gear.
SST 09628–62011, 09250–10011 (09253–10010)

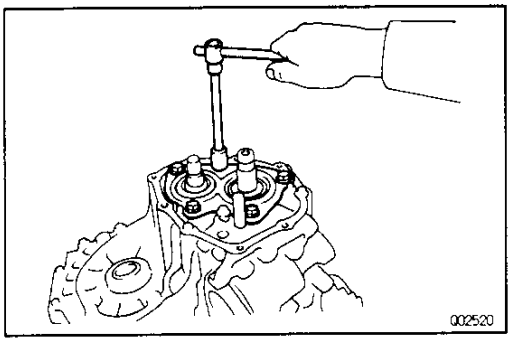

15. REMOVE REAR BEARING RETAINER

Remove the 5 bolts and rear bearing retainer.

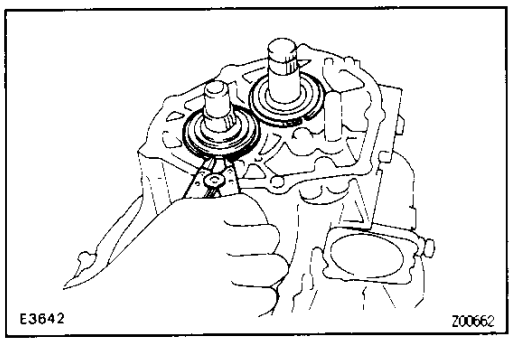

16. REMOVE BEARING SNAP RINGS

Using a snap ring expander, remove the 2 snap rings.
HINT: If it is difficult to remove the snap rings, pull up the shafts.

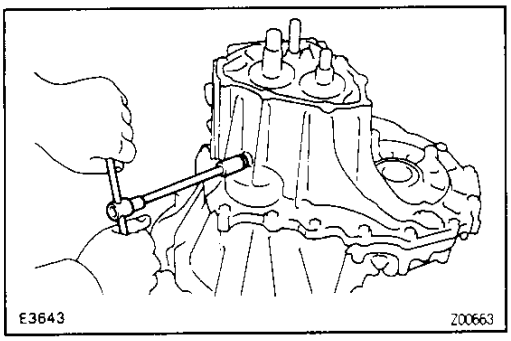

17. REMOVE REVERSE IDLER GEAR SHAFT LOCK BOLT

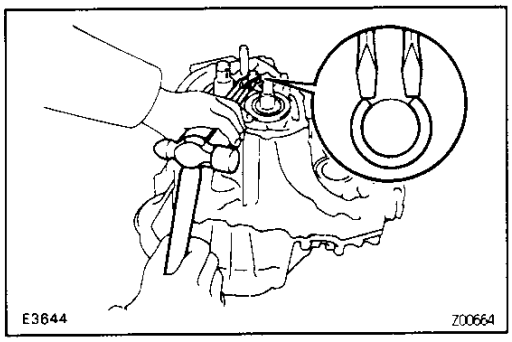

18. REMOVE NO. 2 SHIFT FORK SHAFT SNAP RING

Using 2 screwdrivers and a hammer, tap out the snap ring.

Downloaded from www.Manualslib.com manuals search engine

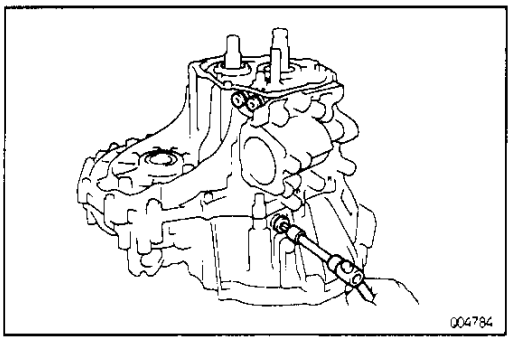

19. REMOVE SCREW PLUGS, SPRING SEATS, SPRINGS, BALLS AND LOCK BALL ASSEMBLY

(a) Using a hexagon wrench, remove the 3 plugs.

(b) Using a magnetic finger, remove the 3 spring seats, springs and balls.

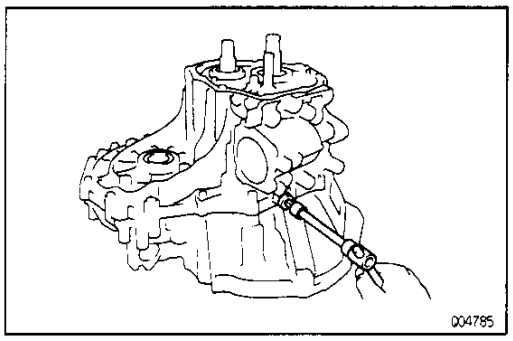

20. REMOVE LOCK BALL ASSEMBLY

Using a hexagon wrench, remove the lock ball assembly.

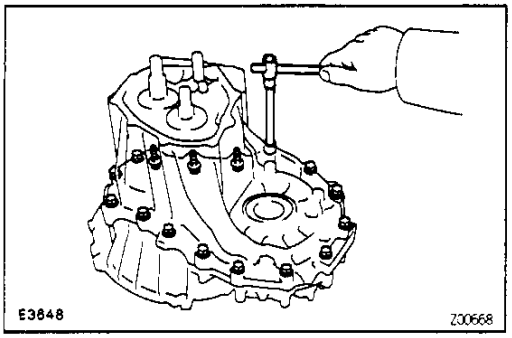

21. REMOVE TRANSMISSION CASE

(a) Transaxle Case Side:
Remove the 3 bolts.

(b) Transmission Case Side:
Remove the 13 bolts.

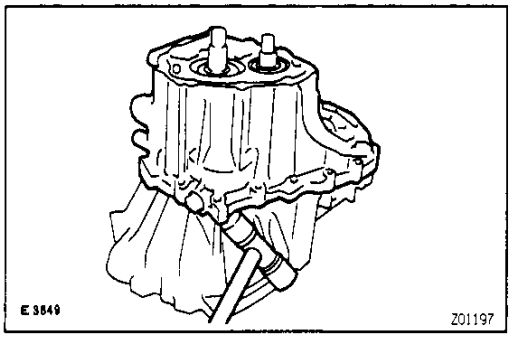

(c) Carefully tap the projection of the transmission case with a plastic hammer to remove the transmission case from the transaxle case, and remove the transmission case.

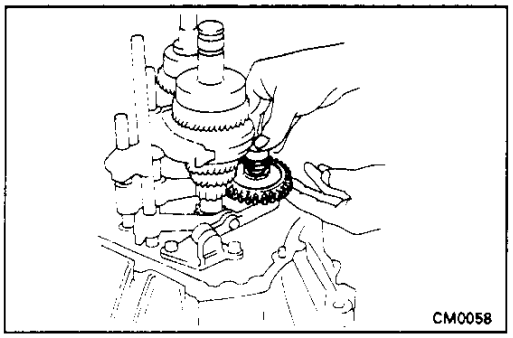

22. REMOVE REVERSE IDLER GEAR, THRUST WASHER AND IDLER GEAR SHAFT

Downloaded from www.Manualslib.com manuals search engine

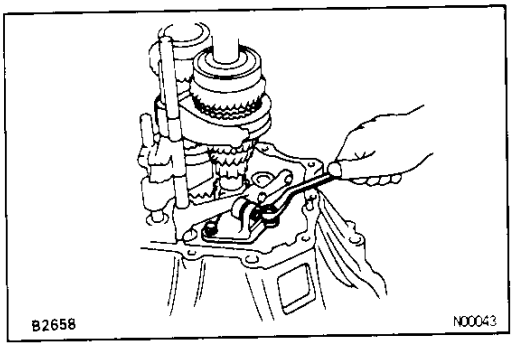

23. REMOVE REVERSE SHIFT ARM BRACKET

Remove the 2 bolts and reverse shift arm bracket.

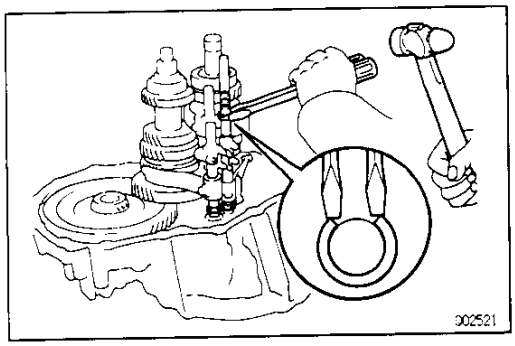

24. REMOVE SHIFT FORKS AND SHIFT FORK SHAFTS

(a) Using 2 screwdrivers and a hammer, tap out the 3 snap rings.

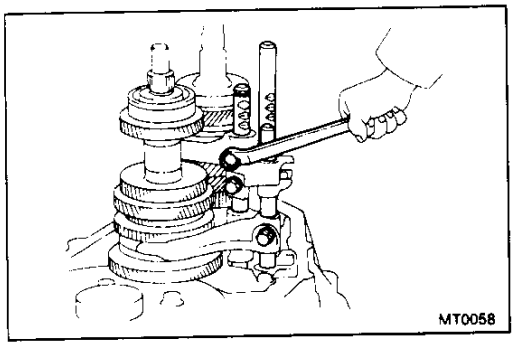

(b) Remove the 3 set bolts.

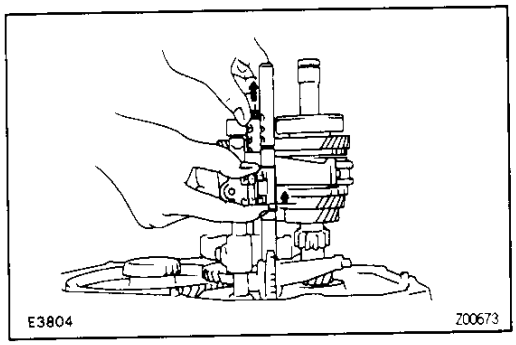

(c) Pull up the No.3 shift fork shaft, remove the No.2 shift fork shaft and shift head.

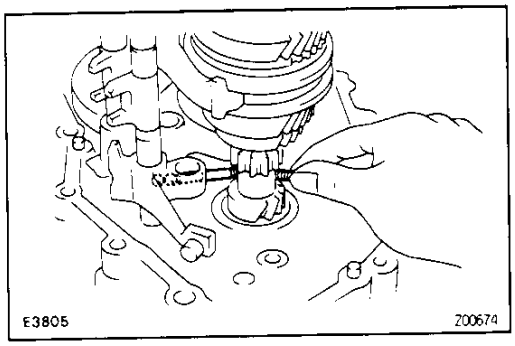

(d) Using a magnetic finger, remove the 2 balls from the reverse shift fork.

Downloaded from www.Manualslib.com manuals search engine

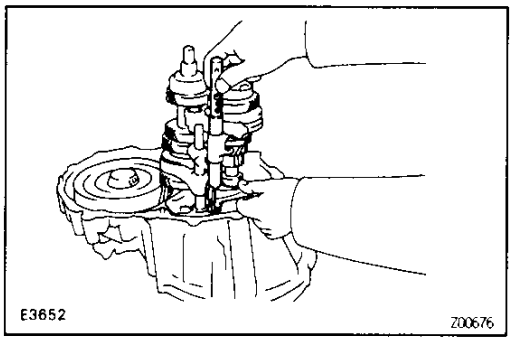

(e) Remove the No.3 shift fork shaft and reverse shift fork.

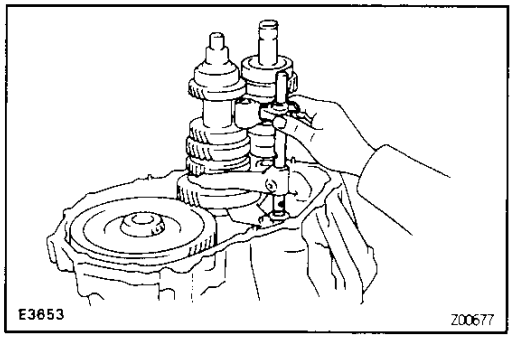

(f) Pull out the No.1 shift fork shaft.

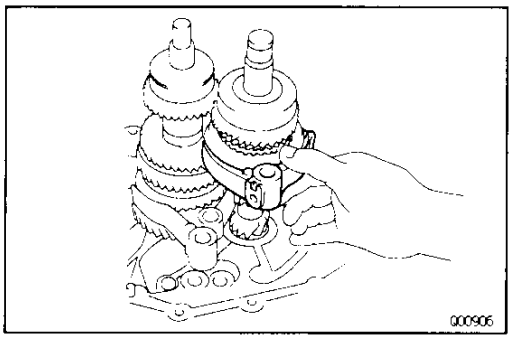

(g) Remove the No.1 and No.2 shift forks.

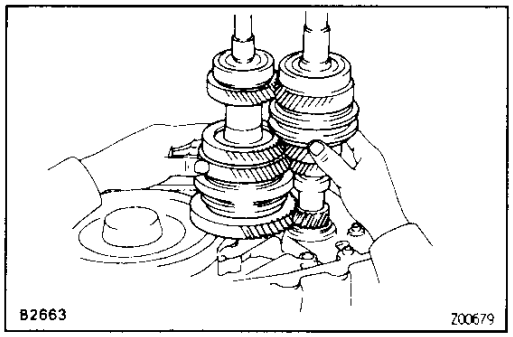

25. REMOVE INPUT AND OUTPUT SHAFTS ASSEMBLY TOGETHER FROM TRANSAXLE CASE

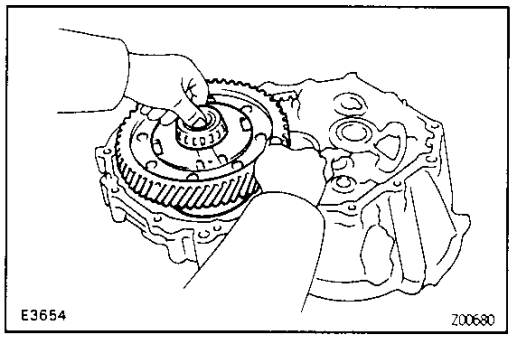

26. REMOVE DIFFERENTIAL CASE ASSEMBLY

Downloaded from www.Manualslib.com manuals search engine

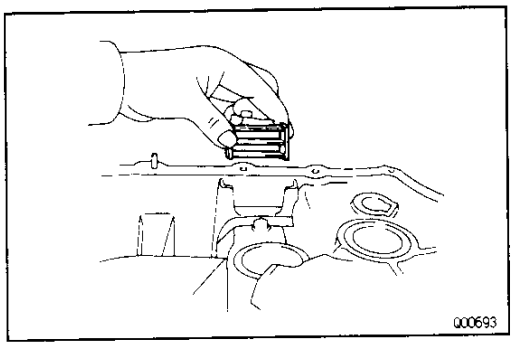

27. REMOVE MAGNET FROM TRANSAXLE CASE

MX06P-03

COMPONENT PARTS INSPECTION

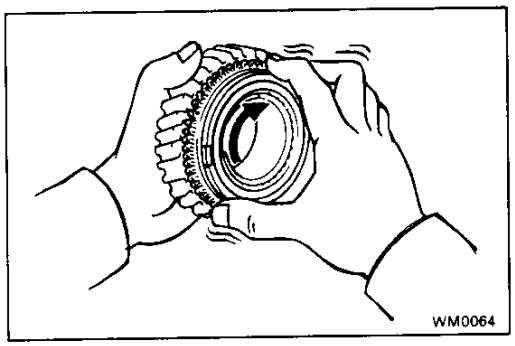

1. INSPECT 5TH GEAR SYNCHRONIZER RING

(a) Check for wear or damage.

(b) Check the braking effect of the synchronizer ring.
Turn the synchronizer ring in one direction while pushing it to the gear cone. Check that the ring locks.
If the braking effect is insufficient, apply a small amount of fine lapping compound between the synchoronizer ring and gear cone.
Lightly rub the synchronizer ring and gear cone together.
NOTICE: Ensure the fine lapping compound is completely washed off after rubbing.

(c) Check again the braking effect of the synchronizer ring. If it does not lock, replace the synchronizer ring.

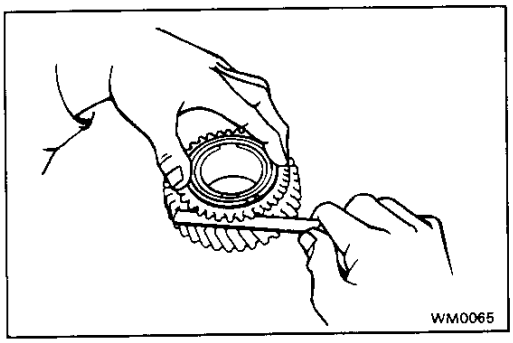

(d) Using a feeler gauge, measure the clearance between the synchronizer ring back and gear spline end.
Minimum clearance:
0.6 mm (0.024 in.)
HINT:
- When replacing either a synchronizer ring or gear, apply a small amount of fine lapping compound between the synchronizer ring and gear cone.
  Lightly rub the synchronizer ring and gear cone together.
- When replacing both the synchronizer ring and gear, there is no need to apply any compound or to rub them together.

NOTICE: Ensure the fine lapping compound is completely washed off after rubbing.

Downloaded from www.Manualslib.com manuals search engine

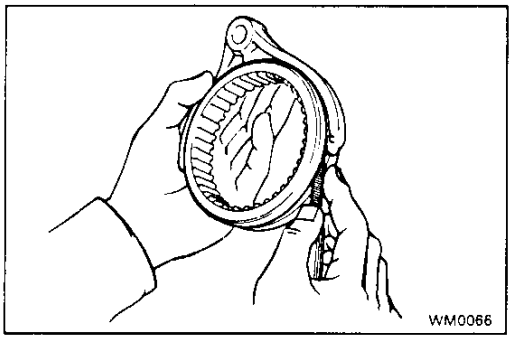

2. INSPECT CLEARANCE OF SHIFT FORK AND HUB SLEEVE

Using a feeler gauge, measure the clearance between the hub sleeve and shift fork.

Maximum clearance:

1.0 mm (0.039 in.)

If the clearance exceeds the maximum, replace the shift fork or hub sleeve.

MX

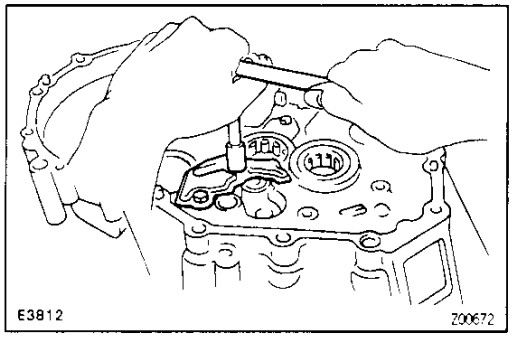

3. REMOVE TRANSAXLE CASE RECEIVER

Remove the 2 bolts and transaxle case receiver.

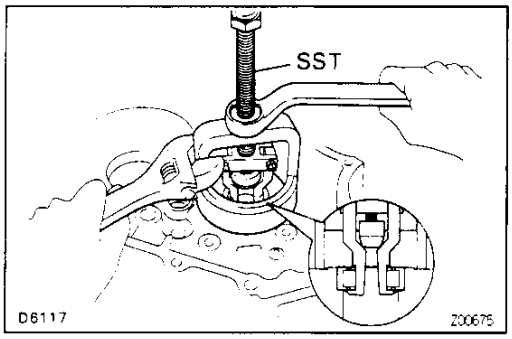

4. IF NECESSARY, REPLACE INPUT SHAFT FRONT BEARING

(a) Using SST, pull out the bearing.
SST 09612–65014

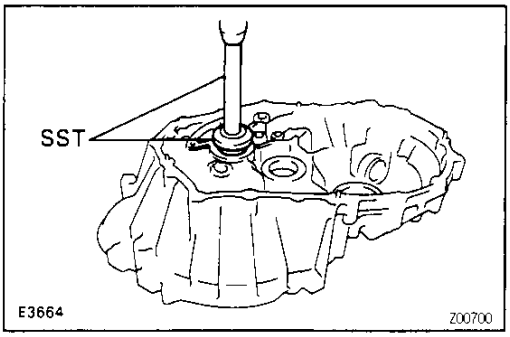

(b) Using SST and a press, install a new bearing.
SST 09608–12010 (09608–03020, 09608–00030)

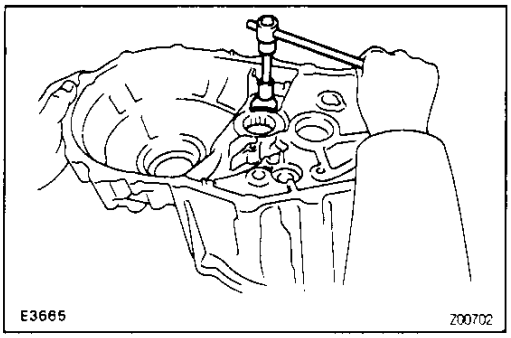

5. IF NECESSARY, REPLACE OUTPUT SHAFT FRONT BEARING

(a) Remove the bolt and bearing lock plate.

Downloaded from www.Manualslib.com manuals search engine

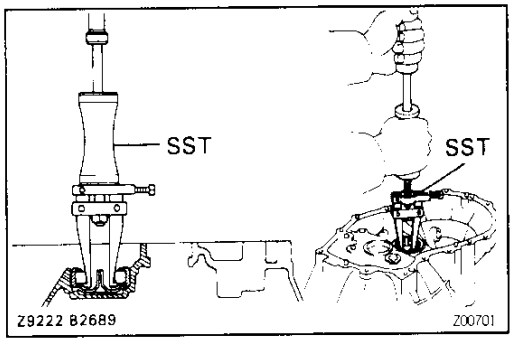

(b) Using SST, pull out the bearing.
SST 09308–00010

(c) Remove the output shaft front cover.

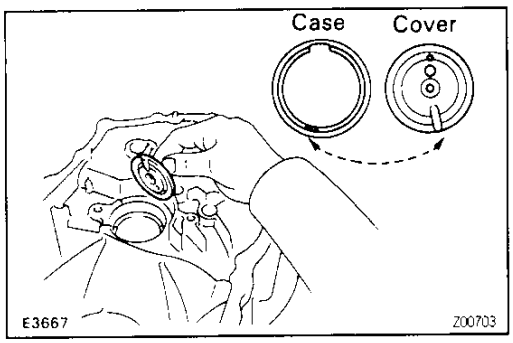

(d) Install the output shaft front cover.
HINT: Install the output shaft front cover projection into the case side hollow.

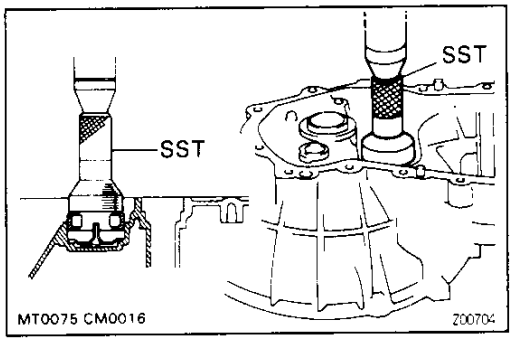

(e) Using SST and a press, install a new bearing.
SST 09310–35010

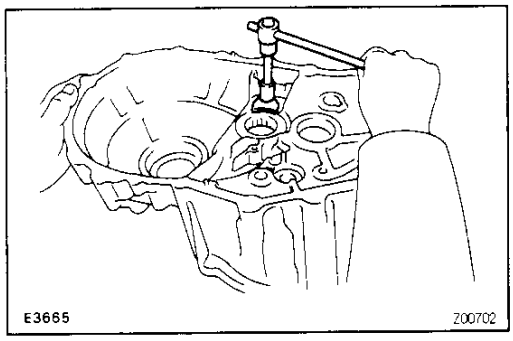

(f) Install the bearing lock plate and torque the bolt.
Torque: 11 N·m (115 kgf·cm, 8 ft·lbf)

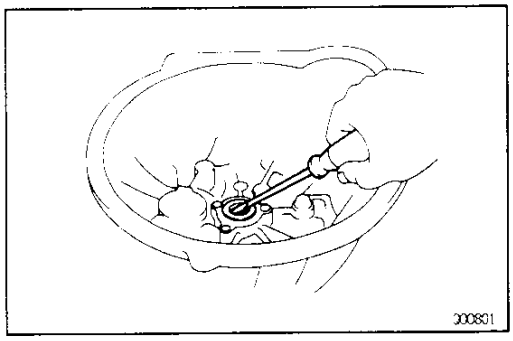

6. IF NECESSARY, REPLACE INPUT SHAFT FRONT OIL SEAL

(a) Using a screwdriver, pry out the oil seal.

Downloaded from www.Manualslib.com manuals search engine

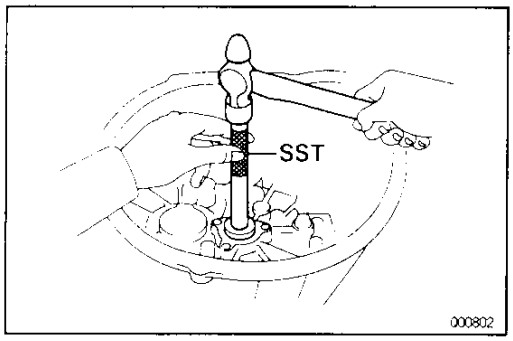

(b) Using SST, drive in a new oil seal.
SST 09608–12010 (09608–00020, 09608–00080)

(c) Coat the lip of the oil seal with MP grease.

MX

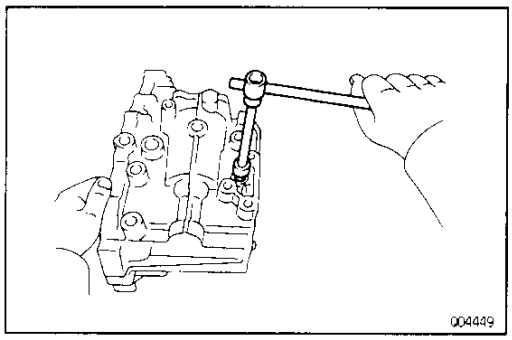

7. IF NECESSARY, REPLACE REVERSE RESTRICT PIN

(a) Using a hexagon wrench, remove the straight screw plug.

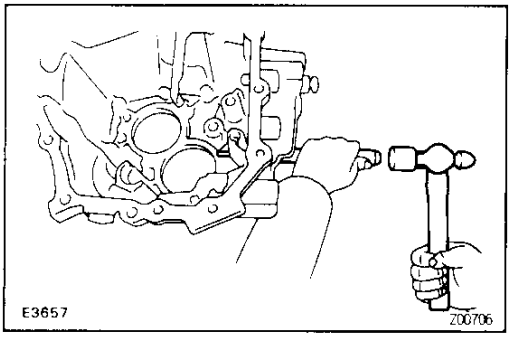

(b) Using a pin punch and hammer, drive out the slotted spring pin.

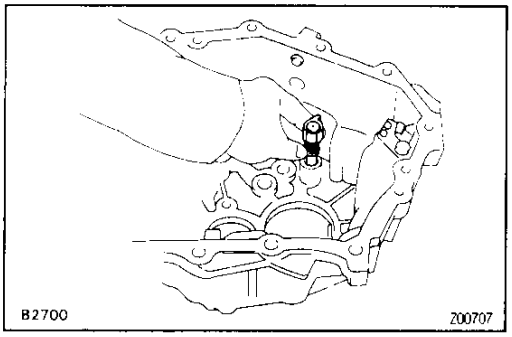

(c) Replace the reverse restrict pin.

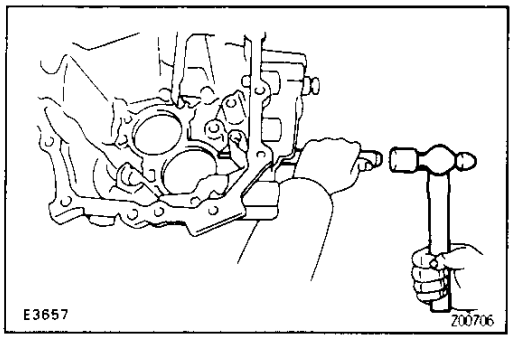

(d) Using a pin punch and hammer, drive in the slotted spring pin.

Downloaded from www.Manualslib.com manuals search engine

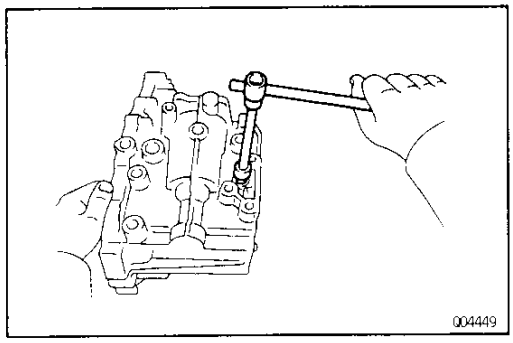

(e) Apply sealant to the screw plug threads.
Sealant:
Part No. 08833–00080, THREE BOND 1344, LOCTITE 242 or equivalent

(f) Using a hexagon wrench, install and torque the straight screw plug.
Torque: 13 N·m (130 kgf·cm, 9 ft·lbf)

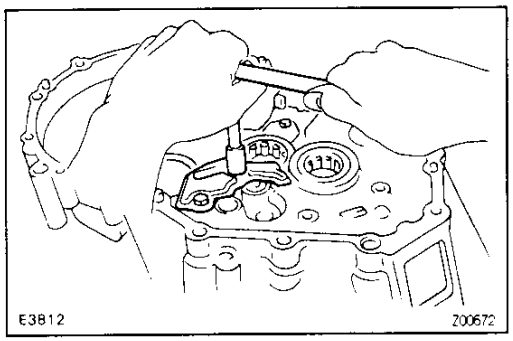

8. INSTALL TRANSAXLE CASE RECEIVER

Install the transaxle case receiver and torque the 2 bolts.
Torque: 11 N·m (115 kgf·cm, 8 ft·lbf)

Downloaded from www.Manualslib.com manuals search engine

INPUT SHAFT
COMPONENTS

MX048-02

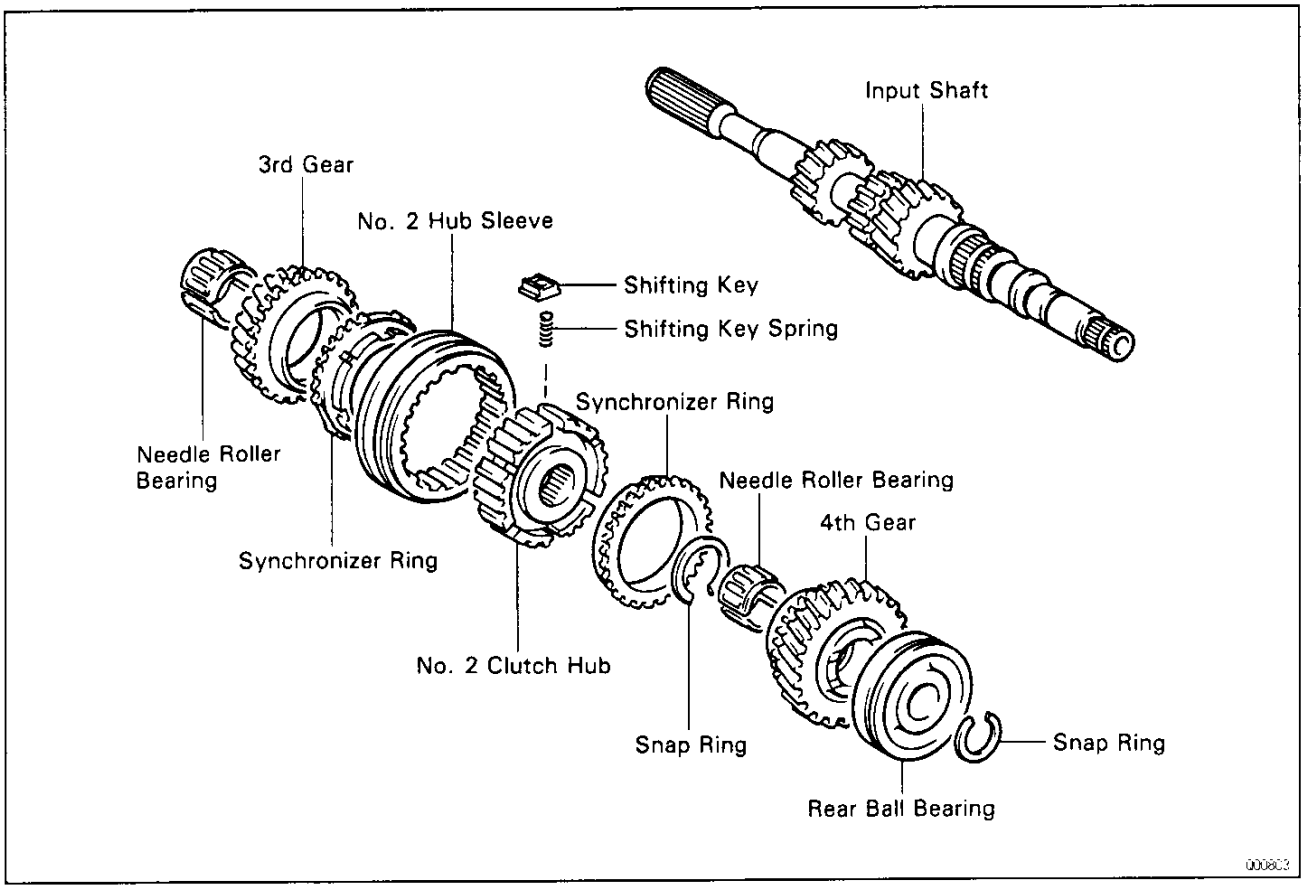

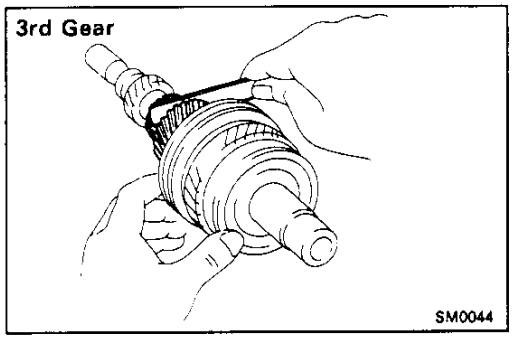

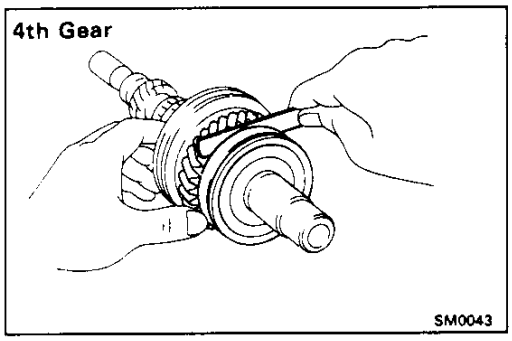

MX060-03

INPUT SHAFT DISASSEMBLY

1. **INSPECT 3RD AND 4TH GEAR THRUST CLEARANCE**

   Using a feeler gauge, measure the thrust clearance.

   Standard clearance:

   3rd gear

   0.10–0.35 mm (0.0039–0.0138 in.)

   4th gear

   0.10–0.55 mm (0.0039–0.0217 in.)

   Maximum clearance:

   3rd gear

   0.40 mm (0.0157 in.)

   4th gear

   0.60 mm (0.0236 in.)

Downloaded from www.Manualslib.com manuals search engine

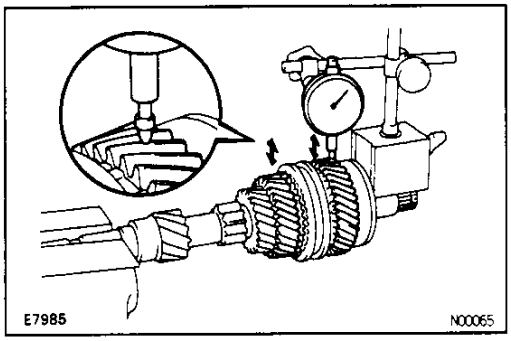

2. INSPECT 3 RD AND 4 TH GEAR RADIAL CLEARANCE

Using a dial indicator, measure the radial clearance between the gear and shaft.

Standard clearance:

0.015 – 0.058 mm (0.0006 – 0.0023 in.)

Maximum clearance:

0.070 mm (0.0028 in.)

If the clearance exceeds the maximum, replace the gear, needle roller bearing and shaft.

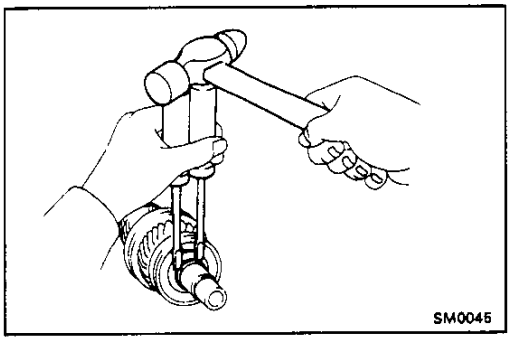

3. REMOVE SNAP RING

Using 2 screwdrivers and a hammer, tap out the snap ring.

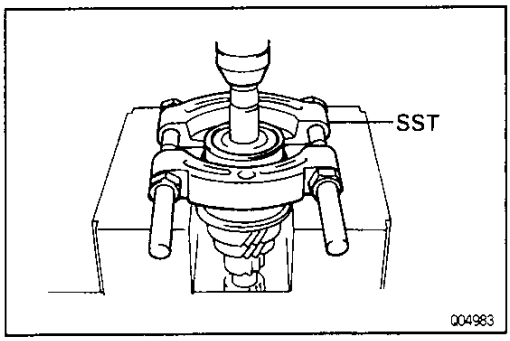

4. REMOVE REAR BALL BEARING, 4 TH GEAR, NEEDLE ROLLER BEARINGS, SPACER AND SYNCHRONIZER RING FROM INPUT SHAFT

(a) Using SST and a press, remove the rear ball bearing.
SST 09950 – 00020

(b) Remove the 4th gear, needle roller bearings, spacer and synchronizer ring.

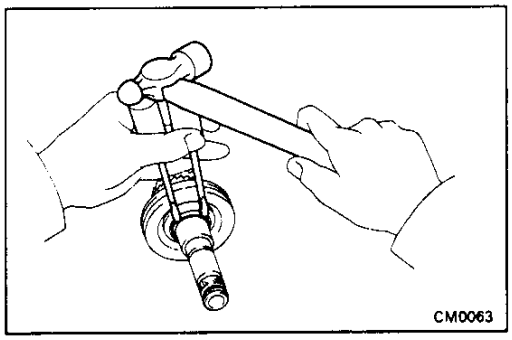

5. REMOVE SNAP RING

Using 2 screwdrivers and a hammer, tap out the snap ring.

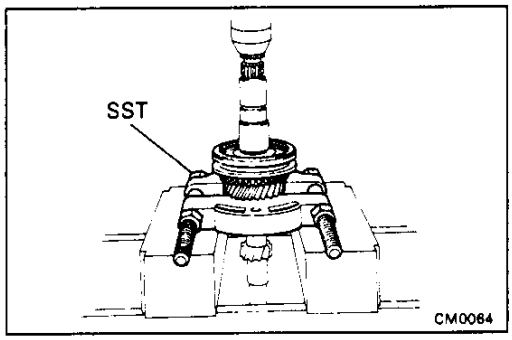

6. REMOVE NO. 2 HUB SLEEVE ASSEMBLY, 3 RD GEAR, SYNCHRONIZER RING AND NEEDLE ROLLER BEARINGS

Using SST and a press, remove the No.2 hub sleeve assembly, 3rd gear, synchronizer ring and needle roller bearings.

SST 09950 – 00020

Downloaded from www.Manualslib.com manuals search engine

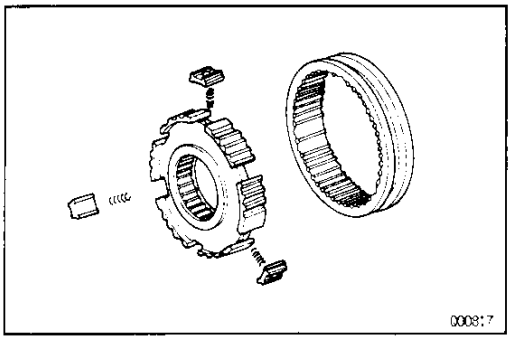

7. REMOVE NO.2 HUB SLEEVE, SHIFTING KEYS AND SPRINGS FROM NO.2 CLUTCH HUB

Remove the 3 shifting keys and springs from the No.2 clutch hub.

MX

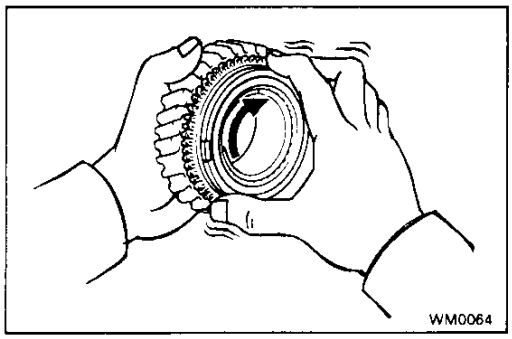

MX06R-04

INPUT SHAFT COMPONENT PARTS INSPECTION

1. INSPECT SYNCHRONIZER RING

(a) Check for wear or damage.

(b) Check the braking effect of the synchronizer ring.
Turn the synchronizer ring in one direction while pushing it to the gear cone. Check that the ring locks.
If braking effect is insufficient, apply a small amount of fine lapping compound between the synchronizer ring and gear cone.
Lightly rub the synchronizer ring and gear cone together.
NOTICE: Ensure the fine lapping compound is completely washed off after rubbing.

(c) Check again the braking effect of the synchronizer ring. If it does not lock, replace the synchronizer ring.

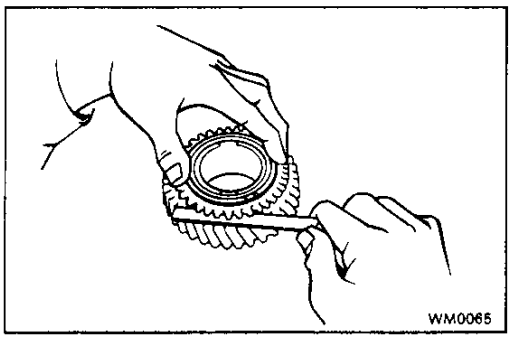

(d) Using a feeler gauge, measure the clearance between the synchronizer ring back and gear spline end.
Minimum clearance:
0.6 mm (0.024 in.)
HINT:
- When replacing either a synchronizer ring or gear, apply a small amount of fine lapping compound between the synchronizer ring and gear cone.
  Lightly rub the synchronizer ring and gear cone together.
- When replacing both the synchronizer ring and gear, there is no need to apply any compound or to rub them together.

NOTICE: Ensure the fine lapping compound is completely washed off after rubbing.

Downloaded from www.Manualslib.com manuals search engine

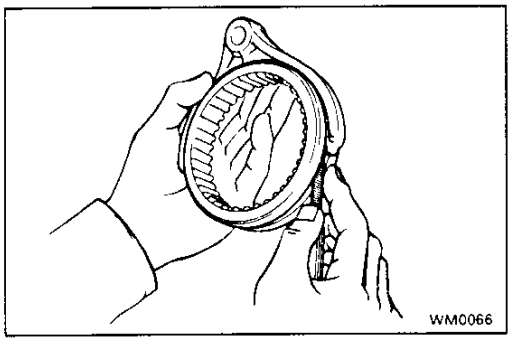

2. INSPECT CLEARANCE OF SHIFT FORK AND HUB SLEEVE

Using a feeler gauge, measure the clearance between the hub sleeve and shift fork.

Maximum clearance:

1.0 mm (0.039 in.)

If the clearance exceeds the maximum, replace the shift fork or hub sleeve.

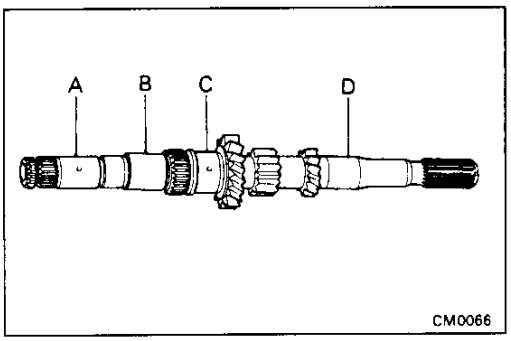

3. INSPECT INPUT SHAFT

(a) Check the input shaft for wear or damage.

(b) Using a micrometer, measure the outer diameter of the input shaft journal surface.

Minimum outer diameter:

Part A 24.870 mm (0.9791 in.)
Part B 28.970 mm (1.1405 in.)
Part C 30.970 mm (1.2193 in.)
Part D 24.970 mm (0.9831 in.)

If the outer diameter is less than the minimum, replace the inutput shaft.

(c) Using a dial indicator, check the shaft runout.

Maximum runout:

0.05 mm (0.0020 in.)

If the runout exceeds the maximum, replace the input shaft.

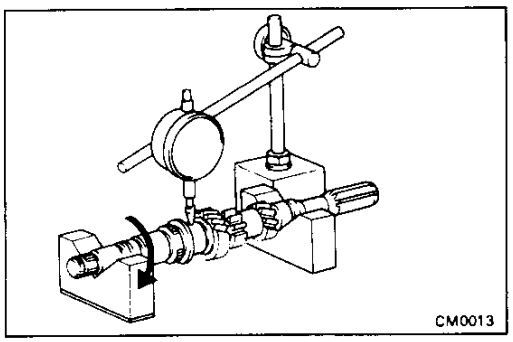

MX068-03

INPUT SHAFT ASSEMBLY

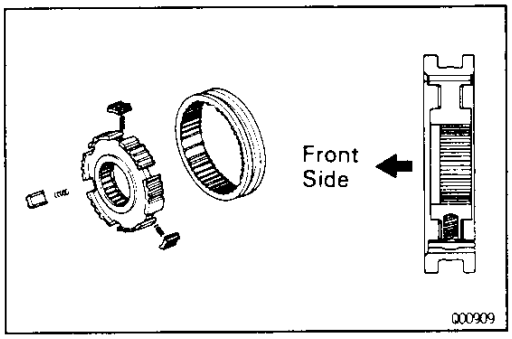

HINT: Coat all of the sliding and rotating surfaces with gear oil before assembly.

1. INSTALL NO. 2 CLUTCH HUB INTO NO. 2 HUB SLEEVE

(a) Install the 3 springs and shifting keys to the No.2 clutch hub.

(b) Install the No.2 hub sleeve to the No.2 clutch hub.

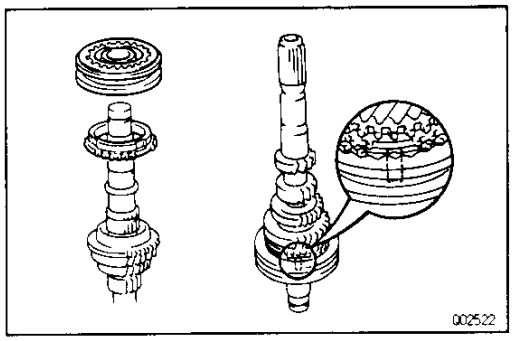

2. INSTALL 3RD GEAR, NEEDLE ROLLER BEARINGS, SYNCHRONIZER RING AND NO.2 HUB SLEEVE ASSEMBLY TO INPUT SHAFT

(a) Apply gear oil to the needle roller bearings.

(b) Place the synchronizer ring on the gear and align the ring slots with the shifting keys.

Downloaded from www.Manualslib.com manuals search engine

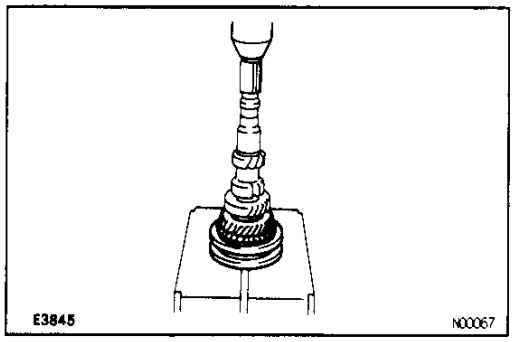

(c) Using a press, install the 3rd gear and No.2 hub sleeve assembly.

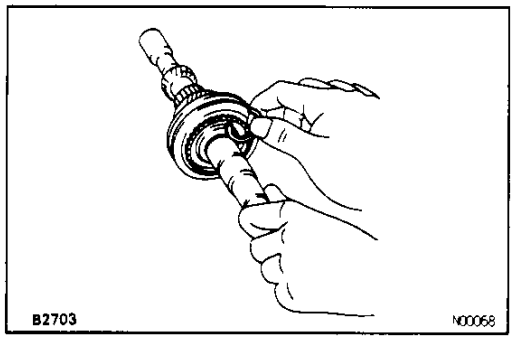

3. INSTALL SNAP RING

(a) Select a snap ring that will allow minimum axial play.

Mark	Thickness mm (in.)	Mark	Thickness mm (in.)
0	2.30 (0.0906)	3	2.48 (0.0976)
1	2.36 (0.0929)	4	2.54 (0.1000)
2	2.42 (0.0953)	5	2.60 (0.1024)

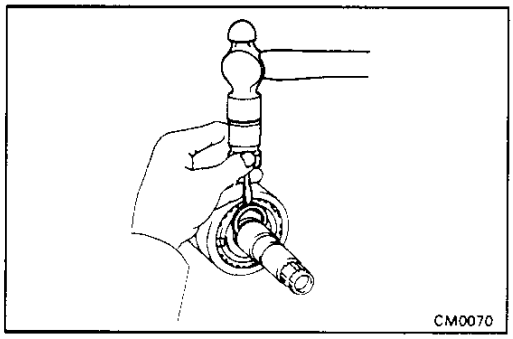

(b) Using a screwdriver and hammer, tap in the snap ring.

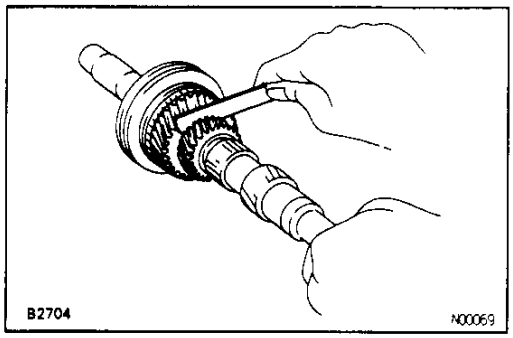

4. INSPECT 3RD GEAR THRUST CLEARANCE

Using a feeler gauge, measure the 3rd gear thrust clearance.

Standard clearance:

0.10 – 0.35 mm (0.0039 – 0.0138 in.)

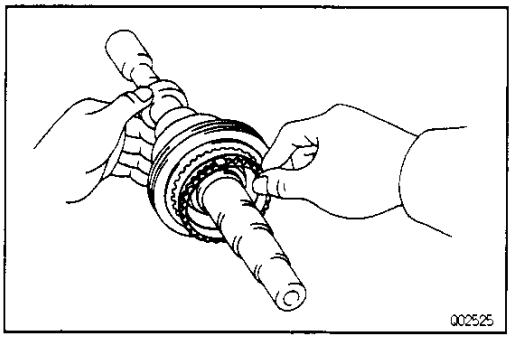

5. INSTALL SYNCHRONIZER RING, NEEDLE ROLLER BEARING, SPACER, 4TH GEAR AND REAR BALL BEARING

(a) Apply gear oil to the needle roller bearing.

(b) Place the synchronizer ring on the gear and align the ring slots with the shifting keys.

Downloaded from www.Manualslib.com manuals search engine

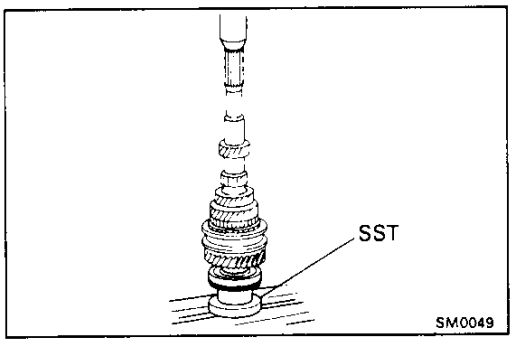

(c) Using SST and a press, install the rear ball bearing.
SST 09608–20012 (09608–03070)

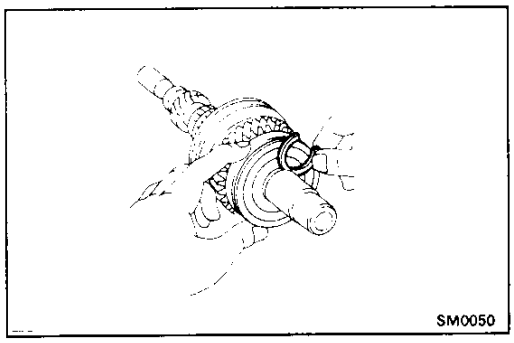

6. INSTALL SNAP RING

(a) Select a snap ring that will allow minimum axial play.

Mark	Thickness mm (in.)	Mark	Thickness mm (in.)
A	2.29 (0.0902)	D	2.47 (0.0972)
B	2.35 (0.0925)	E	2.53 (0.0996)
C	2.41 (0.0949)	F	2.59 (0.1020)

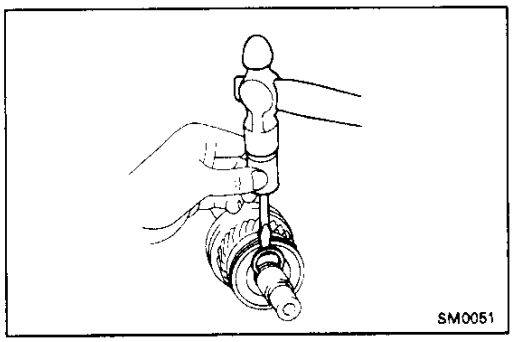

(b) Using a screwdriver and hammer, tap in the snap ring.

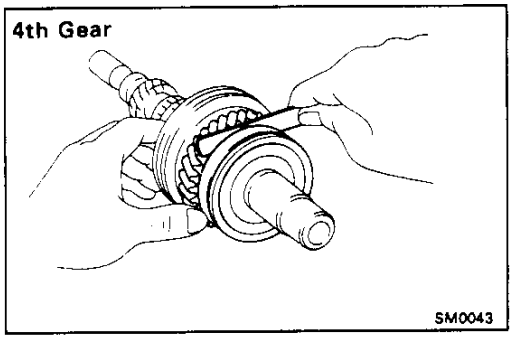

7. INSPECT 4TH GEAR THRUST CLEARANCE

Using a feeler gauge, measure the 4th gear thrust clearance.

Standard clearance:

0.10–0.55 mm (0.0039–0.0217 in.)

Downloaded from www.Manualslib.com manuals search engine

OUTPUT SHAFT
COMPONENTS

MX043-03

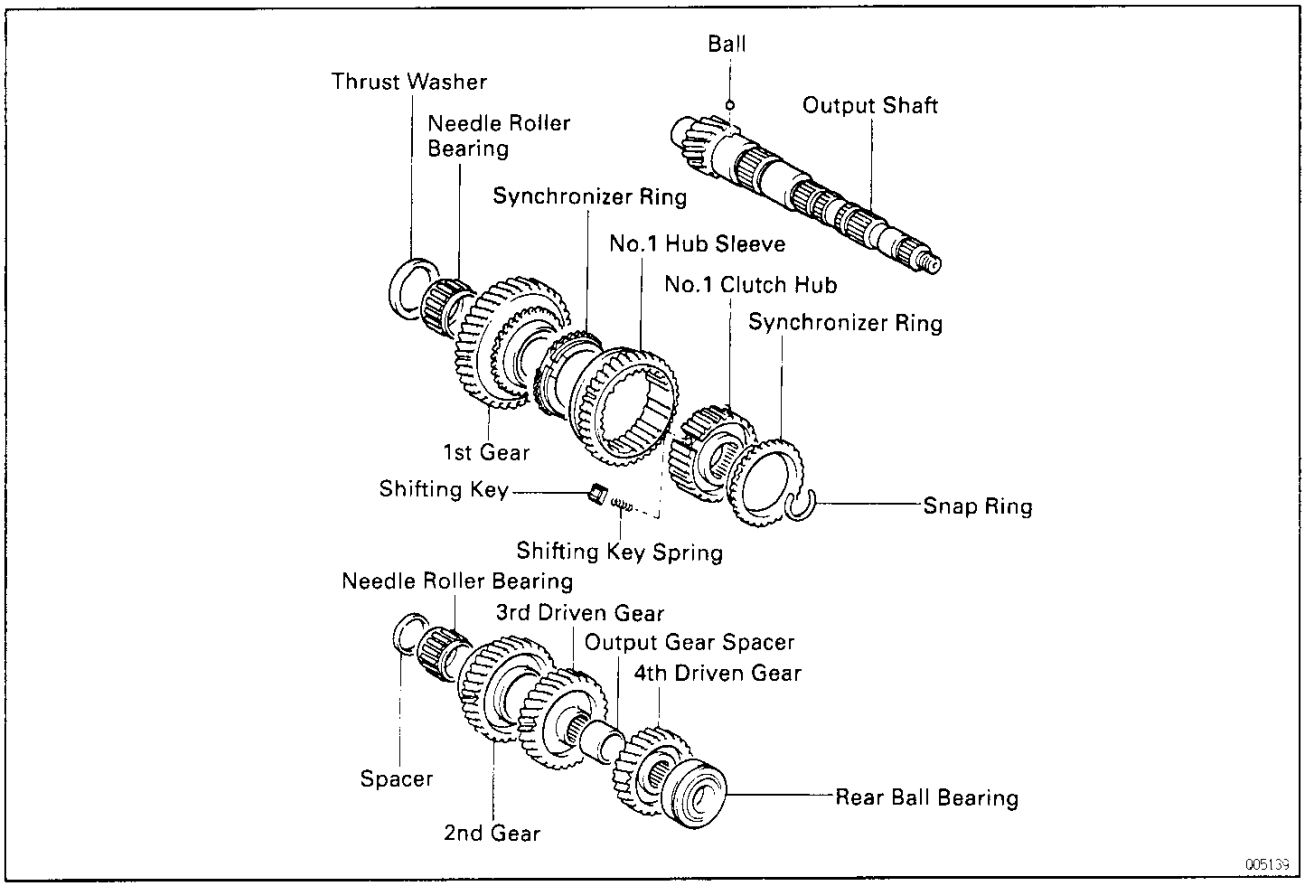

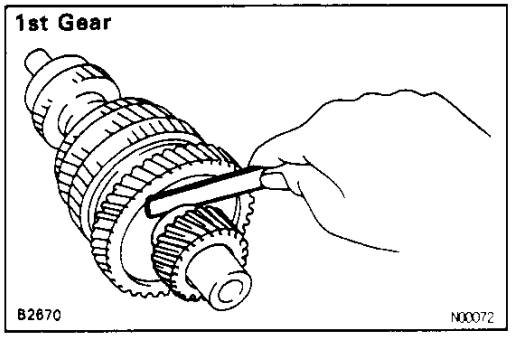

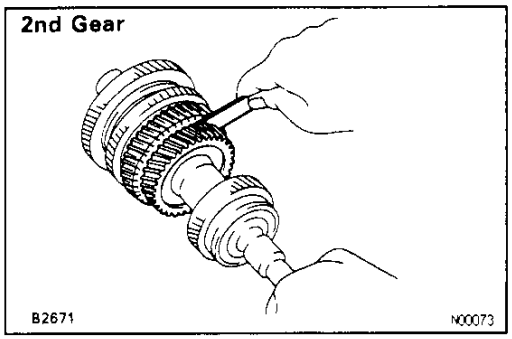

MX044-04

OUTPUT SHAFT DISASSEMBLY

1. **INSPECT 1ST AND 2ND GEAR THRUST CLEARANCE**

   Using a feeler gauge, measure the thrust clearance.

   Standard clearance:

   1st gear

   0.10 – 0.40 mm (0.0039 – 0.0157 in.)

   2nd gear

   0.10 – 0.45 mm (0.0039 – 0.0177 in.)

   Maximum clearance:

   1st gear

   0.45 mm (0.0177 in.)

   2nd gear

   0.50 mm (0.0197 in.)

Downloaded from www.Manualslib.com manuals search engine

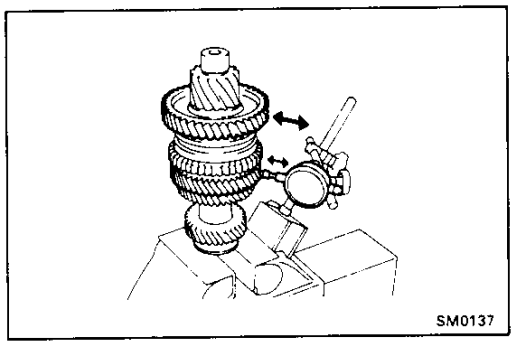

2. INSPECT 1 ST AND 2 ND GEAR RADIAL CLEARANCE

Using a dial indicator, measure the radial clearance between the gear and shaft.

Standard clearance:

0.015–0.058 mm (0.0006–0.0023 in.)

Maximum clearance:

0.070 mm (0.0028 in.)

If the clearance exceeds the maximum, replace the gear, needle roller bearing and shaft.

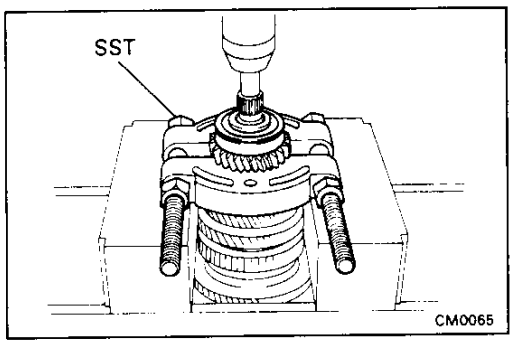

3. REMOVE REAR BALL BEARING, 4TH DRIVEN GEAR AND OUTPUT GEAR SPACER FROM OUTPUT SHAFT

(a) Using SST and a press, remove the rear ball bearing and 4th driven gear.
SST 09950–00020

(b) Remove the output spacer.

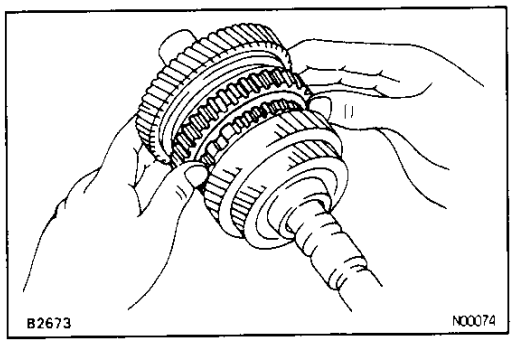

4. REMOVE 3RD DRIVEN GEAR, 2ND GEAR, NEEDLE ROLLER BEARING, SYNCHRONIZER RING AND SPACER

(a) Shift the No.1 hub sleeve into the 1st gear.

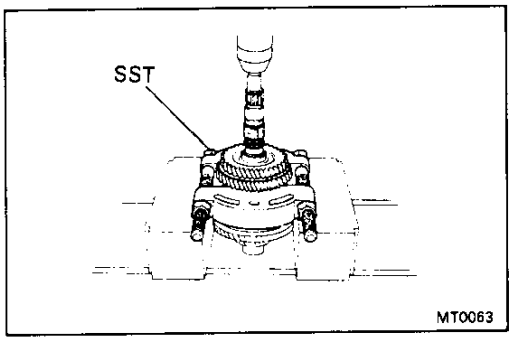

(b) Using SST and a press, remove the 3rd driven gear.
SST 09950–00020

(c) Remove the 2 nd gear, needle roller bearing, synchronizer ring and spacer.

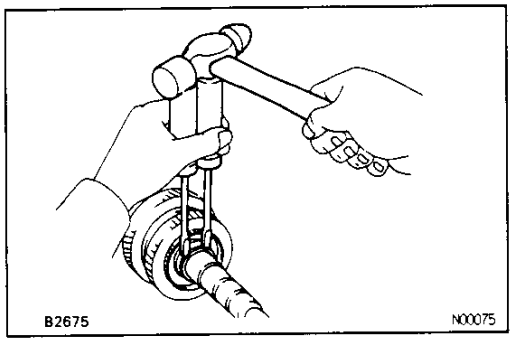

5. REMOVE SNAP RING

Using 2 screwdrivers and a hammer, tap out the snap ring.

Downloaded from www.Manualslib.com manuals search engine

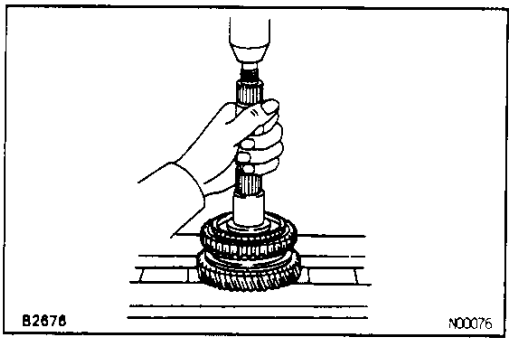

6. **REMOVE NO. 1 HUB SLEEVE ASSEMBLY, 1 ST GEAR, SYNCHRONIZER RING, NEEDLE ROLLER BEARING, THRUST WASHER AND BALL**

(a) Using a press, remove the No.1 hub sleeve assembly, 1st gear and synchronizer ring.

(b) Remove the needle roller bearing, thrust washer and ball.

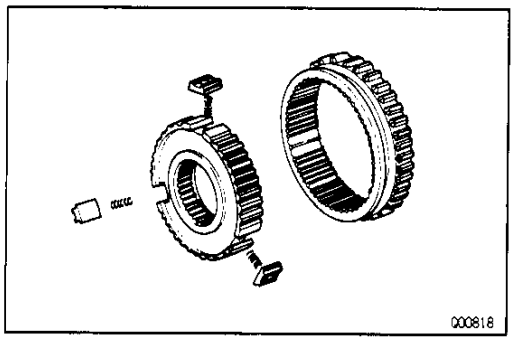

7. **REMOVE NO.1 HUB SLEEVE, SHIFTING KEYS AND SPRINGS FROM NO.1 CLUTCH HUB**

Remove the 3 shifting keys and springs from the No.1 clutch hub.

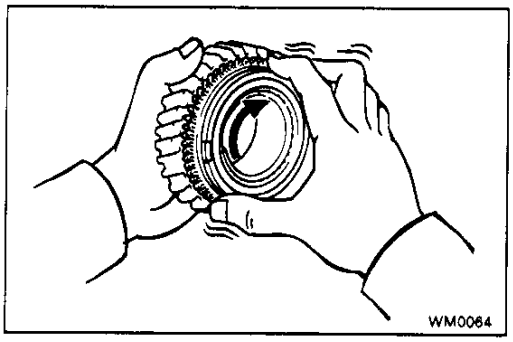

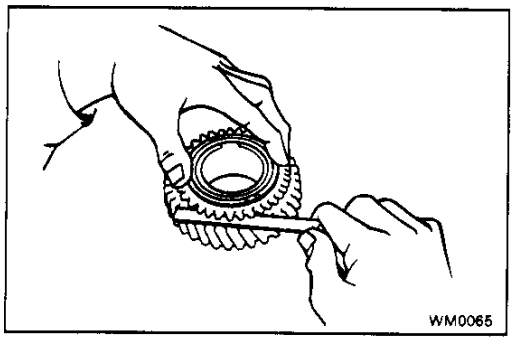

OUTPUT SHAFT COMPONENT PARTS INSPECTION

MX048-06

1. **INSPECT SYNCHRONIZER RINGS**

(a) Check for wear or damage.

(b) Check the braking effect of the synchronizer ring.
Turn the synchronizer ring in one direction while pushing it to the gear cone. Check that the ring locks.
If the braking effect is insufficient, apply a small amount of fine lapping compound between the synchronizer ring and gear cone.
Lightly rub the synchronizer ring and gear cone together.
NOTICE: Ensure the fine lapping compound is completely washed off after rubbing.

(c) Check again the braking effect of the synchronizer ring. If it does not lock, replace the synchronizer ring.

(d) Using a feeler gauge, measure the clearance between the synchronizer ring back and gear spline end.
Minimum clearance:
0.6 mm (0.024 in.)
HINT:
- When replacing either a synchronizer ring or gear, apply a small amount of fine lapping compound between the synchronizer ring and gear cone.
  Lightly rub the synchronizer ring and gear cone together.

Downloaded from www.Manualslib.com manuals search engine

- When replacing both the synchronizer ring and gear, there is no need to apply any compound or to rub them together.

NOTICE: Ensure the fine lapping compound is completely washed off after rubbing.

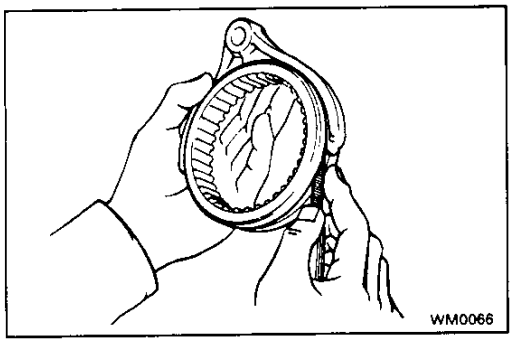

2. INSPECT CLEARANCE OF SHIFT FORK AND HUB SLEEVE

Using a feeler gauge, measure the clearance between the hub sleeve and shift fork.

Maximum clearance:

1.0 mm (0.039 in.)

If the clearance exceeds the maximum, replace the shift fork or hub sleeve.

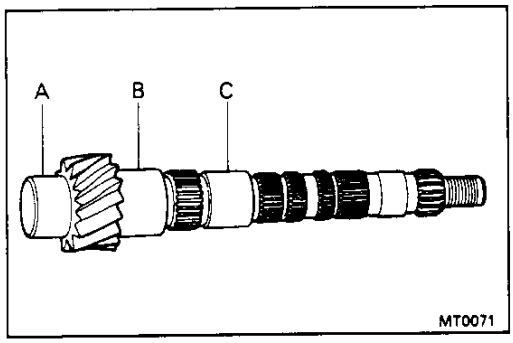

3. INSPECT OUTPUT SHAFT

(a) Check the output shaft for wear or damage.

(b) Using a micrometer, measure the outer diameter of the output shaft journal surface.

Minimum outer diameter:

Part A 32.970 mm (1.2980 in.)
Part B 37.970 mm (1.4949 in.)
Part C 31.970 mm (1.2587 in.)

If the outer diameter is less than the minimum, replace the output shaft.

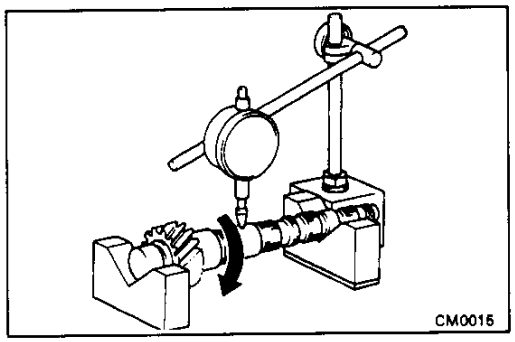

(c) Using a dial indicator, check the shaft runout.

Maximum runout:

0.05 mm (0.0020 in.)

If the runout exceeds the maximum, replace the output shaft.

MX061-01

OUTPUT SHAFT ASSEMBLY

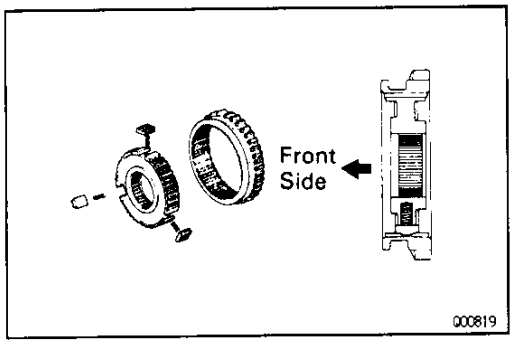

HINT: Coat all of the sliding and rotating surfaces with gear oil before assembly.

1. INSTALL NO. 1 CLUTCH HUB INTO NO. 1 HUB SLEEVE

(a) Install the 3 springs and shifting keys to the No.1 clutch hub.

(b) Install the No.1 hub sleeve to the No.1 clutch hub.

Downloaded from www.Manualslib.com manuals search engine

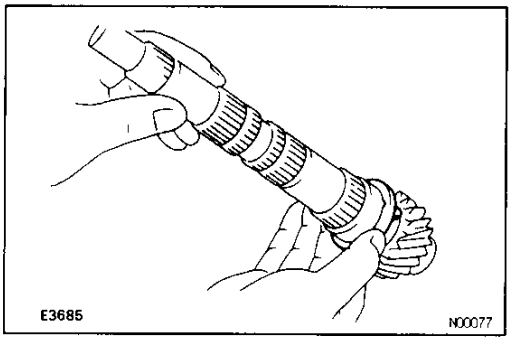

2. INSTALL BALL, THRUST WASHER, 1 ST GEAR, NEEDLE ROLLER BEARING, SYNCHRONIZER RING AND NO.1 HUB SLEEVE ASSEMBLY TO OUTPUT SHAFT

(a) Install the ball to the shaft.

(b) Fit the thrust washer groove securely over the locking ball when installing the thrust on the shaft.

(c) Apply gear oil to the needle roller bearing.

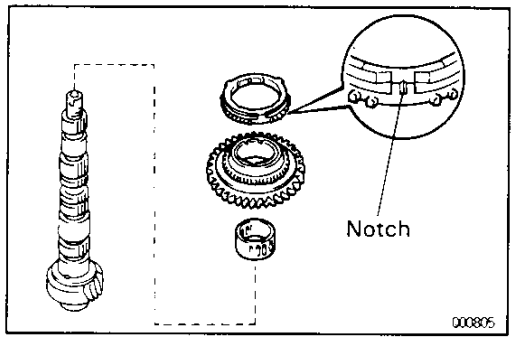

(d) Install the needle roller bearing, 1st gear and synchronizer ring.

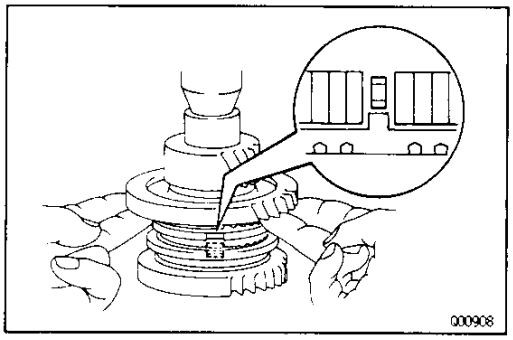

(e) Place the synchronizer ring on the gear and align the clutch hub grooves with the projections on the synchronizer ring.

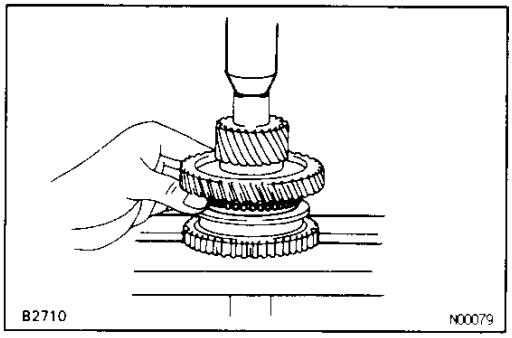

(f) Using a press, install the 1st gear and No.1 hub sleeve.

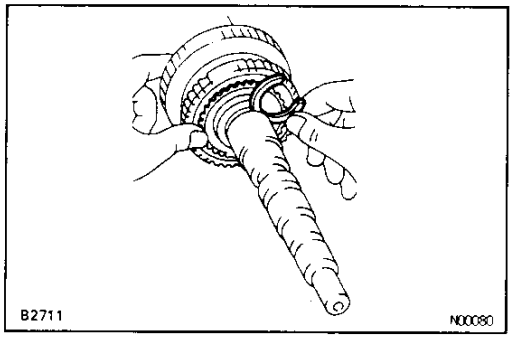

3. INSTALL SNAP RING

(a) Select a snap ring that will allow minimum axial play.

Mark	Thickness mm (in.)	Mark	Thickness mm (in.)
A	2.50 (0.0984)	D	2.68 (0.1055)
B	2.56 (0.1008)	E	2.74 (0.1079)
C	2.62 (0.1031)	F	2.80 (0.1102)

Downloaded from www.Manualslib.com manuals search engine

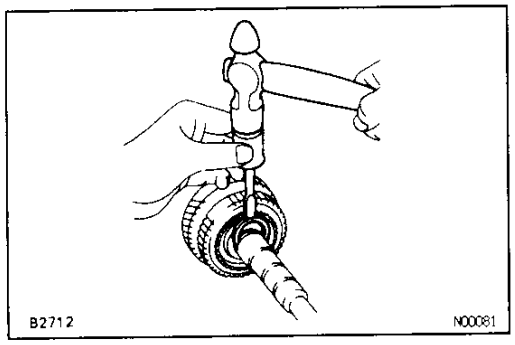

(b) Using a screwdriver and hammer, tap in the snap ring.

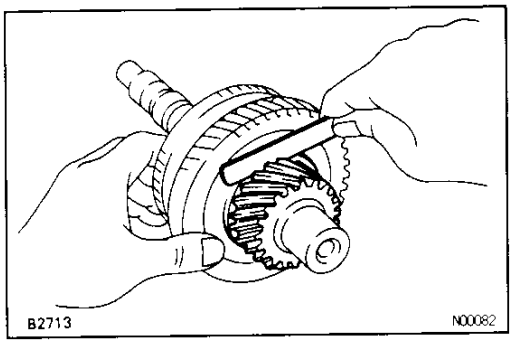

4. INSPECT 1ST GEAR THRUST CLEARANCE

Using a feeler gauge, measure the 1st gear thrust clearance.

Standard clearance:

0.10 – 0.40 mm (0.0039 – 0.0157 in.)

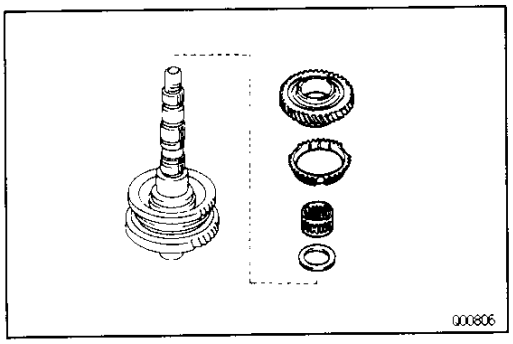

5. INSTALL SYNCHRONIZER RING, SPACER, NEEDLE ROLLER BEARING, 2ND GEAR AND 3RD DRIVEN GEAR

(a) Place the synchronizer ring on the gear and align the clutch hub grooves with the projections on the synchronizer ring.

(b) Install the spacer.

(c) Apply gear oil to the needle roller bearing.

(d) Install the 2nd gear.

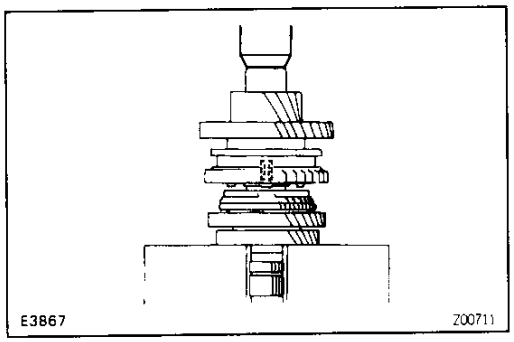

(e) Using a press, install the 3rd driven gear.

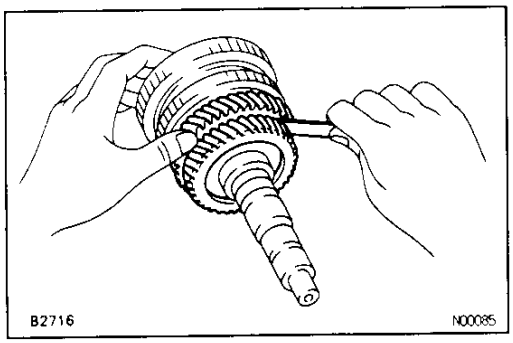

6. INSPECT 2ND GEAR THRUST CLEARANCE

Using a feeler gauge, measure the 2nd gear thrust clearance.

Standard clearance:

0.10 – 0.45 mm (0.0039 – 0.0177 in.)

Downloaded from www.Manualslib.com manuals search engine

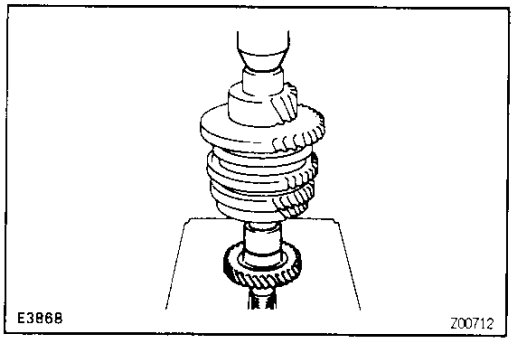

7. INSTALL OUTPUT GEAR SPACER AND 4 TH DRIVEN GEAR

(a) Install the output gear spacer.

(b) Using a press, install the 4th driven gear.

MX

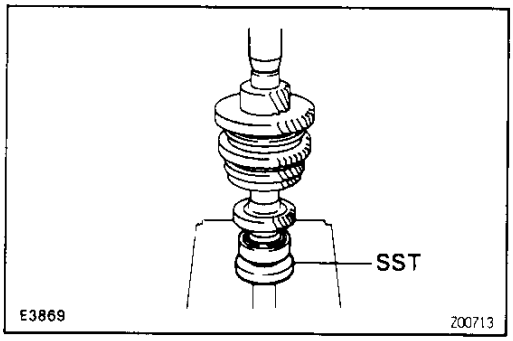

8. INSTALL REAR BALL BEARING

Using SST and a press, install the rear ball bearing.
SST 09316–60010 (09316–00020)

Downloaded from www.Manualslib.com manuals search engine

SHIFT AND SELECT LEVER SHAFT

MX00A-02

COMPONENTS

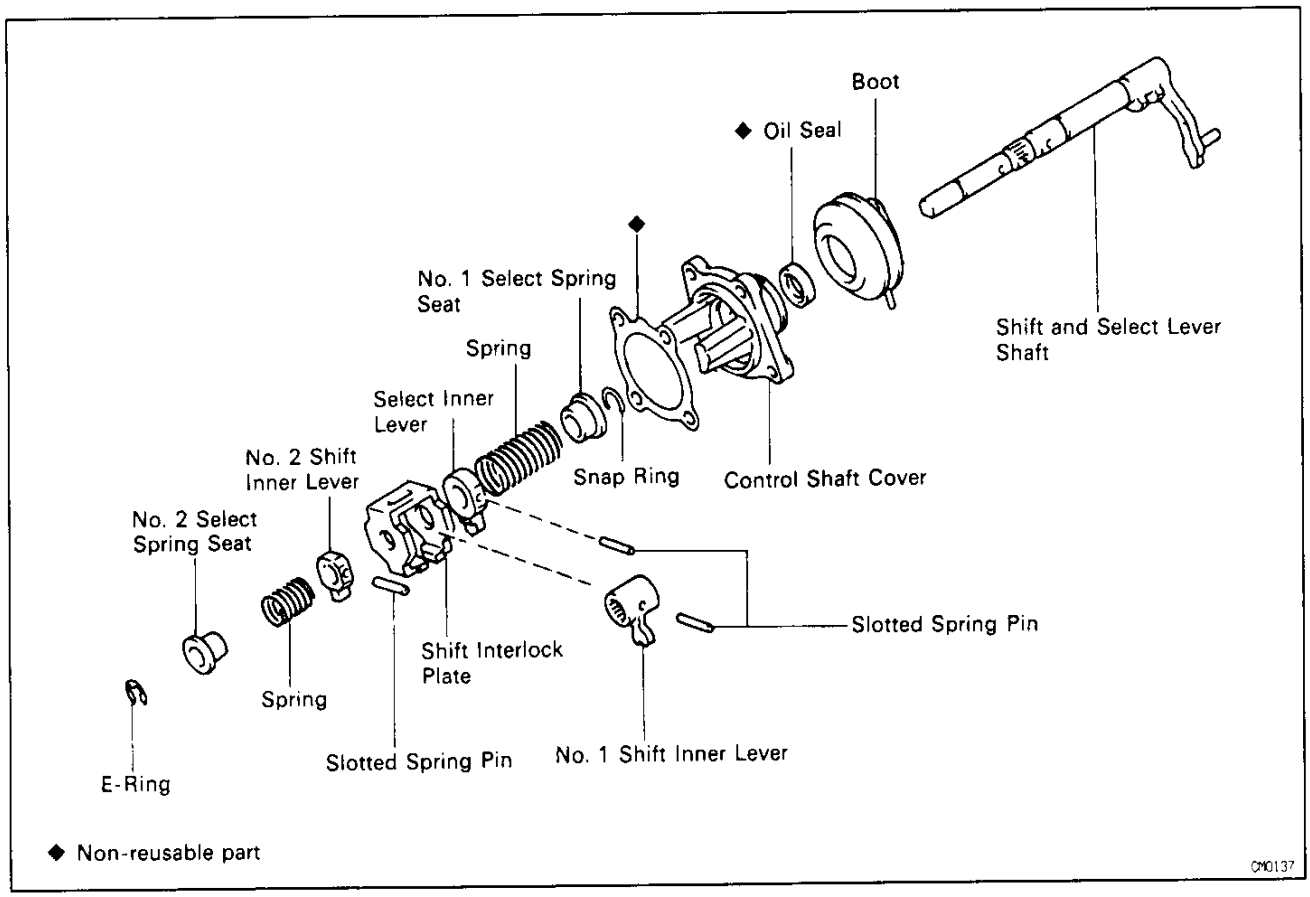

MX00B-07

SHIFT AND SELECT LEVER SHAFT DISASSEMBLY

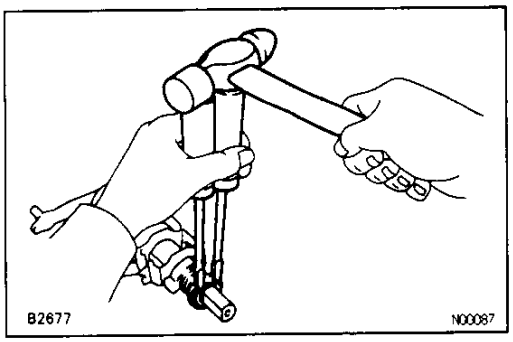

1. REMOVE NO.2 SHIFT INNER LEVER

(a) Using 2 screwdrivers and hammer, tap out the E-ring.

(b) Remove the spring and No.2 select spring seat.

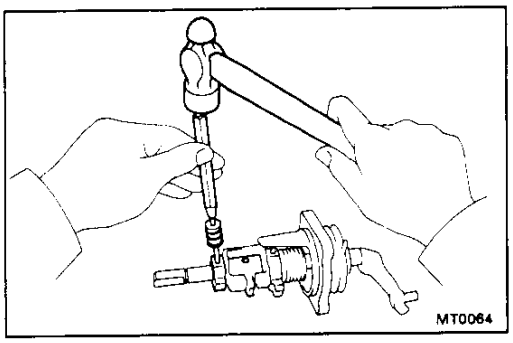

(c) Using a pin punch and hammer, drive out the slotted spring pin from the No.2 shift inner lever.

(d) Remove the No.2 shift inner lever.

Downloaded from www.Manualslib.com manuals search engine

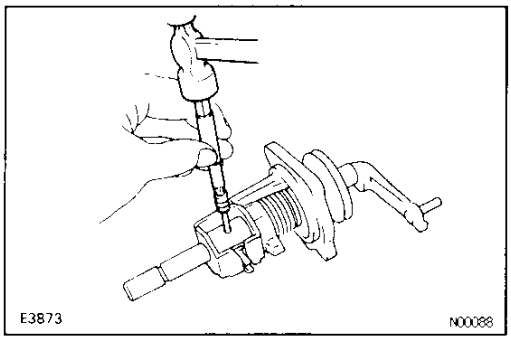

2. REMOVE SHIFT INTERLOCK PLATE AND NO. 1 SHIFT INNER LEVER

(a) Using a pin punch and hammer, drive out the slotted spring pin from the No.1 shift inner lever.

(b) Remove the shift interlock plate and No.1 shift inner lever.

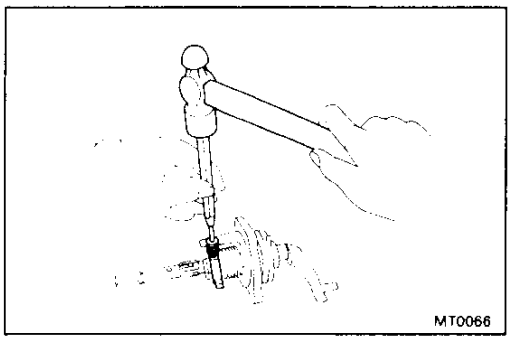

3. REMOVE SELECT INNER LEVER

(a) Using a pin punch and hammer, drive out the slotted spring pin from the select inner lever.

(b) Remove the select inner lever, spring and No.1 select spring seat.

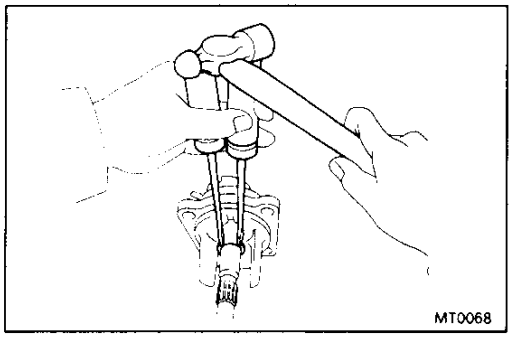

4. REMOVE SNAP RING

Using 2 screwdrivers and a hammer, tap out the snap ring.

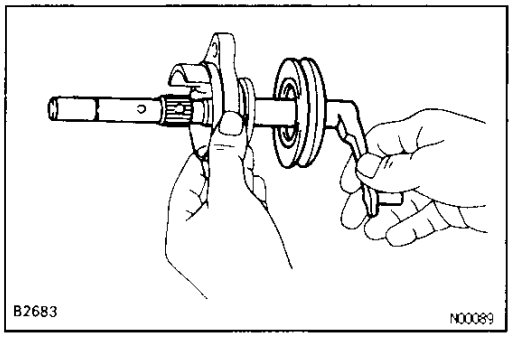

5. REMOVE CONTROL SHAFT COVER AND BOOT

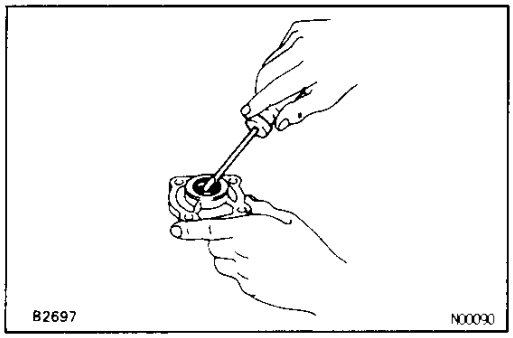

6. IF NECESSARY, REPLACE CONTROL SHAFT COVER OIL SEAL

(a) Using a screwdriver, remove the oil seal.

Downloaded from www.Manualslib.com manuals search engine

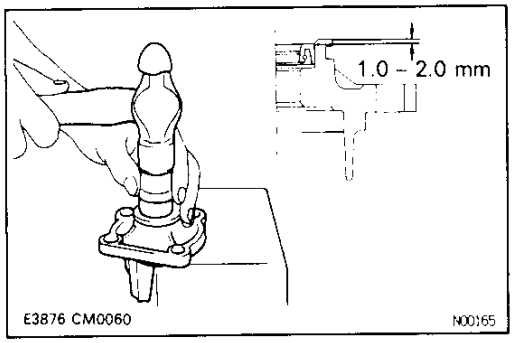

(b) Using a socket wrench and hammer, drive in a new oil seal.
Drive in depth:
1.0 – 2.0 mm (0.039 – 0.079 in.)

(c) Coat the lip of the oil seal with MP grease.

MX

MX00C – 04

SHIFT AND SELECT LEVER SHAFT ASSEMBLY

1. APPLY MP GREASE TO PARTS, AS SHOWN

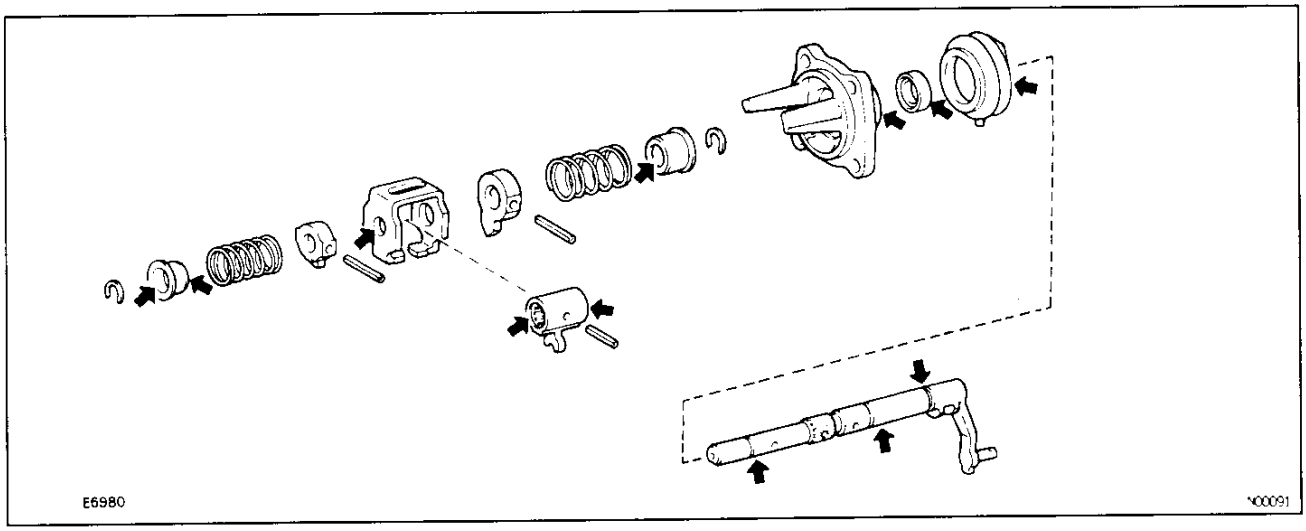

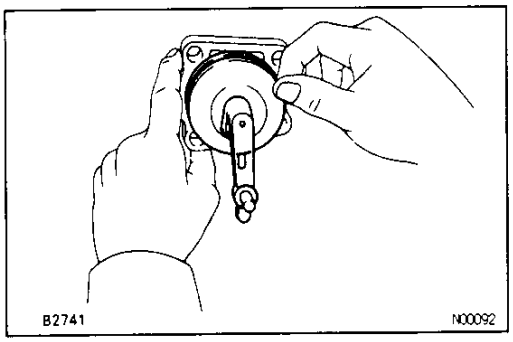

2. INSTALL SHIFT AND SELECT LEVER SHAFT

Install the boot and shift and select lever shaft to the control shaft cover.
HINT: Make sure to install the boot in correct direction.
Position the air bleed of the boot downward.

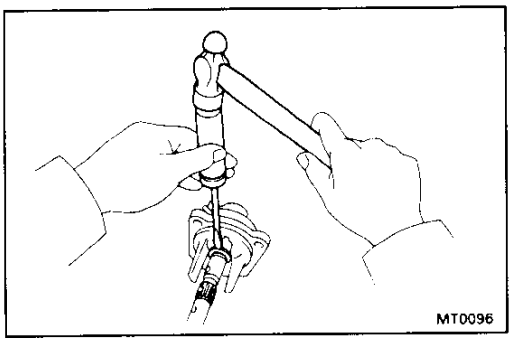

3. INSTALL SNAP RING

Using a screwdriver and hammer, tap in the snap ring.

Downloaded from www.Manualslib.com manuals search engine

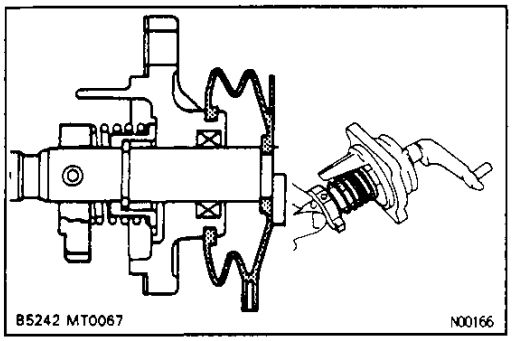

4. INSTALL SELECT INNER LEVER

(a) Install the No.1 select spring seat, spring and select inner lever.

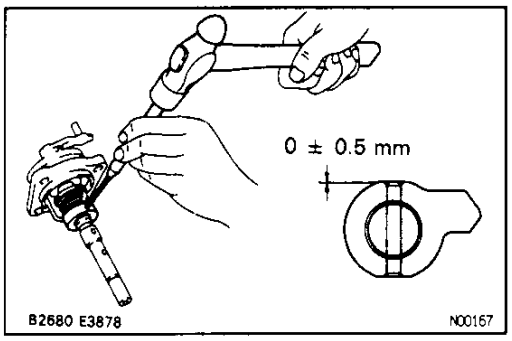

(b) Using a pin punch and hammer, drive in the slotted spring pin to the select inner lever.
Drive in depth:
0 ± 0.5 mm (0 ± 0.020 in.)

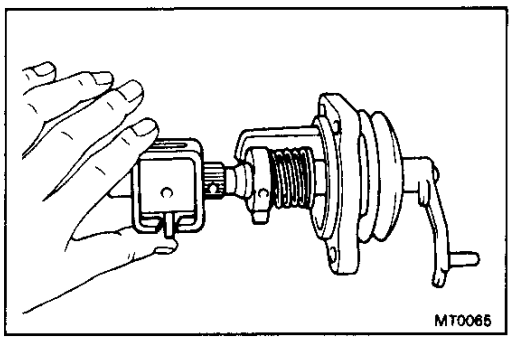

5. INSTALL SHIFT INTERLOCK PLATE AND NO. 1 SHIFT INNER LEVER

(a) Install the No.1 shift inner lever to the shift interlock plate.

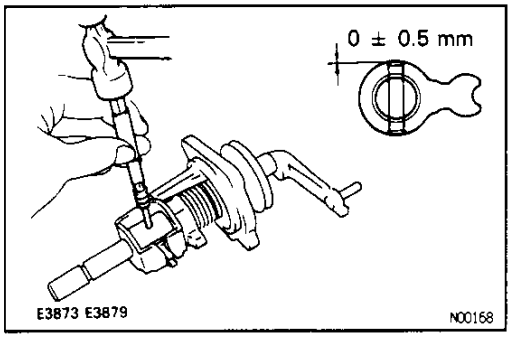

(b) Using a pin punch and hammer, drive in the slotted spring pin to the No.1 shift inner lever.
Drive in depth:
0 ± 0.5 mm (0 ± 0.020 in.)

(c) Check that the shift interlock plate turns smoothly.

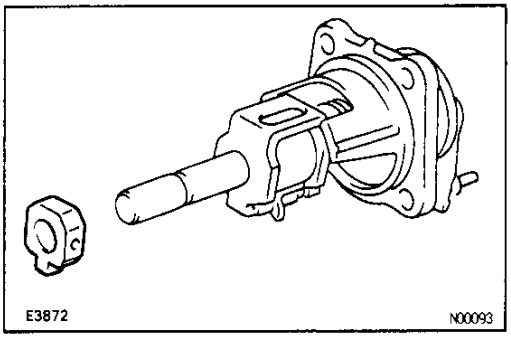

6. INSTALL NO.2 SHIFT INNER LEVER

(a) Install the No.2 shift inner lever.

Downloaded from www.Manualslib.com manuals search engine

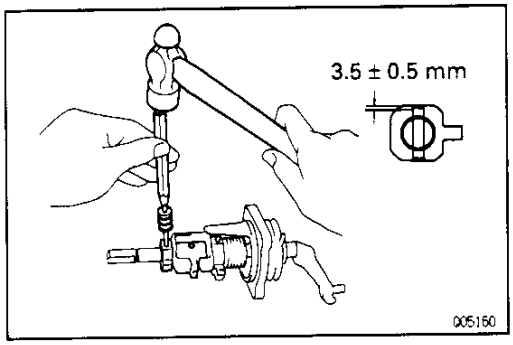

(b) Using a pin punch and hammer, drive in the slotted spring pin to the No.2 shift inner lever.
Drive in depth:
3.5 ± 0.5 mm (0.138 ± 0.020 in.)

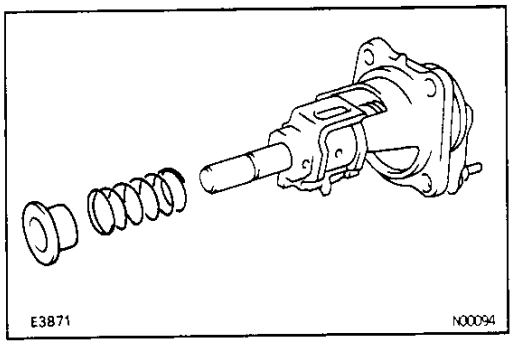

7. INSTALL SPRING, NO.2 SELECT SPRING SEAT AND E–RING

(a) Install the spring and No.2 select spring seat.

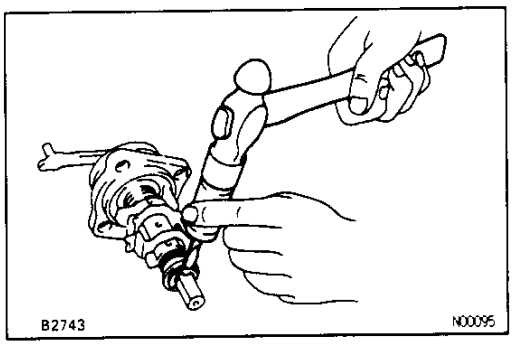

(b) Using a screwdriver and hammer, tap in the E–ring.

Downloaded from www.Manualslib.com manuals search engine

DIFFERENTIAL CASE
COMPONENTS

MX047-04

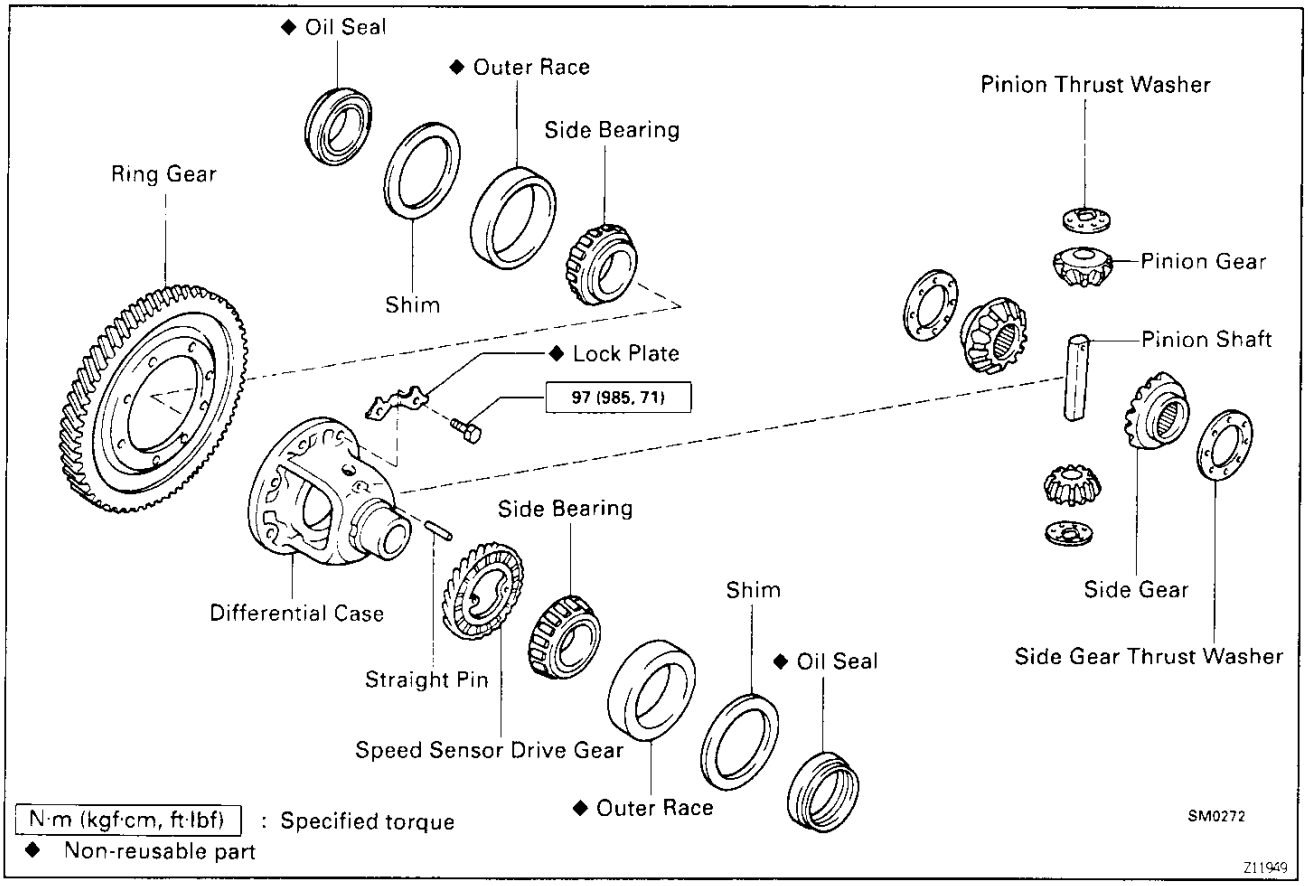

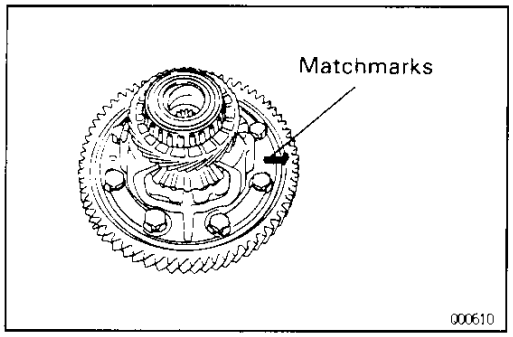

DIFFERENTIAL CASE DISASSEMBLY

MX048-05

1. REMOVE RING GEAR

(a) Place matchmarks on the ring gear and differential case.

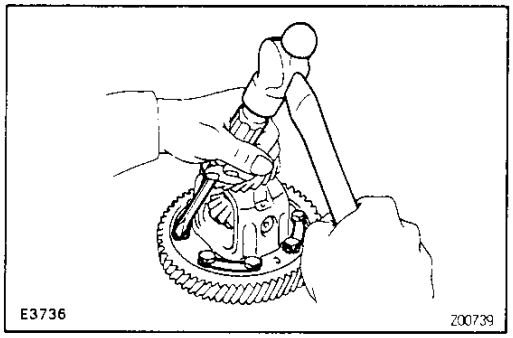

(b) Loosen the staked part of the lock plate.

Downloaded from www.Manualslib.com manuals search engine

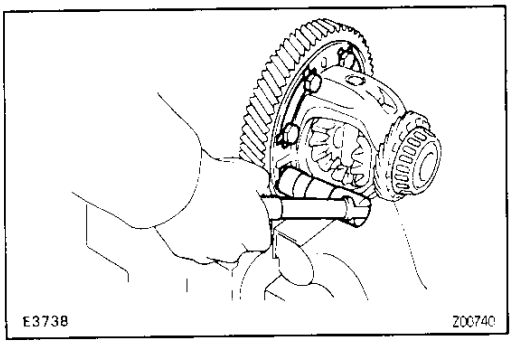

(c) Remove the 8 bolts and 4 lock plates.

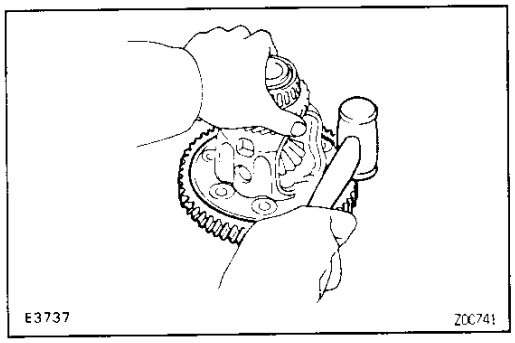

(d) Using a copper hammer, tap on the ring gear to remove it from the differential case.

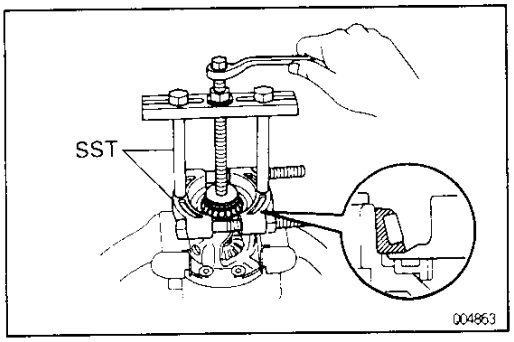

2. SPEED SENSOR (DRIVE GEAR SIDE): REMOVE SIDE BEARING FROM DIFFERENTIAL CASE

(a) Using SST, remove the side bearing.
SST 09950–00020, 09950–00030
HINT: Apply the claw of SST to the bearing inner race at the position where the speed sensor drive gear is indented.

(b) Remove the speed sensor drive gear.

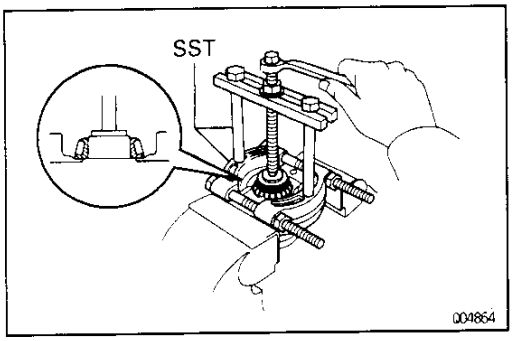

3. SPEED SENSOR (RING GEAR SIDE): REMOVE SIDE BEARING FROM DIFFERENTIAL CASE

Using SST, remove the side bearing.
SST 09950–00020, 09950–00030
HINT: Apply the claw of SST to the bearing inner race at the position where the differential case is indented.

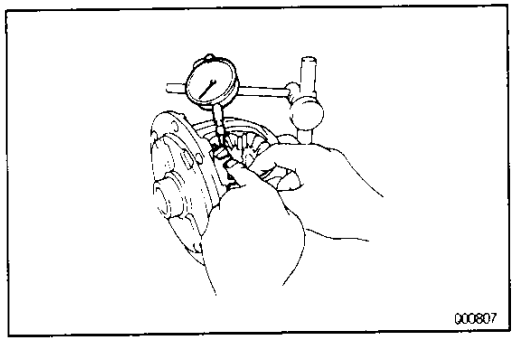

4. INSPECT SIDE GEAR BACKLASH

Using a dial indicator, measure the backlash of one side gear while holding one pinion toward the case.

Standard backlash:

0.05–0.20 mm (0.0020–0.0079 in.)

If the backlash does not meet specification, install the correct thrust washer to the side gears.

Downloaded from www.Manualslib.com manuals search engine

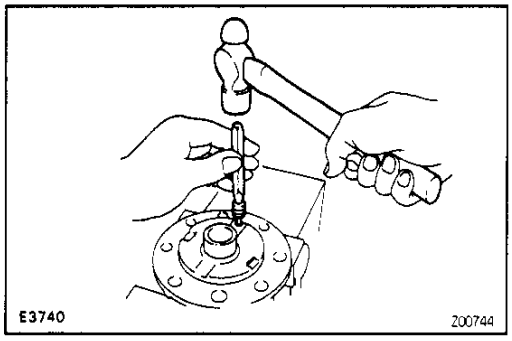

5. DISASSEMBLE DIFFERENTIAL CASE

(a) Using a pin punch and hammer, drive out the pinion shaft straight pin.

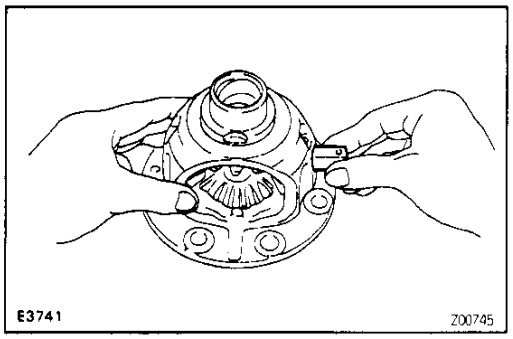

(b) Remove the pinion shaft from the differential case.

(c) Remove the 2 pinions and side gears with the 4 thrust washers from each gear.

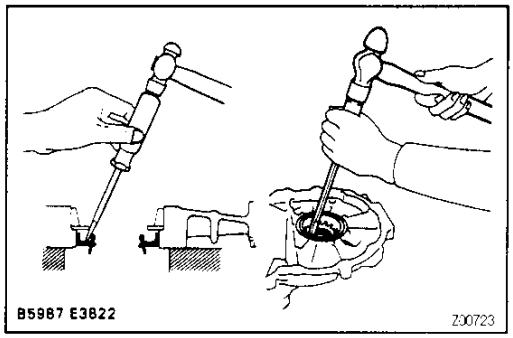

6. TRANSMISSION CASE SIDE:
IF NECESSARY, REPLACE OIL SEAL AND SIDE BEARING OUTER RACE

(a) Using a screwdriver and hammer, drive out the oil seal.

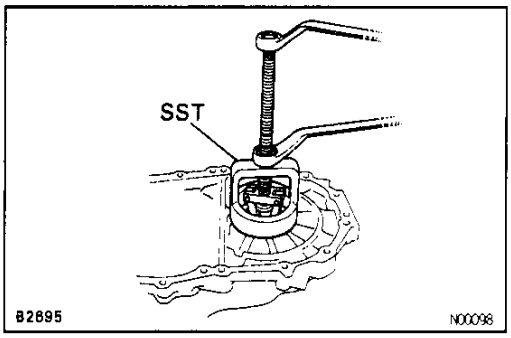

(b) Using SST, pull out the outer race and shim.
SST 09612–65014

(c) Place the shim into the differential case.

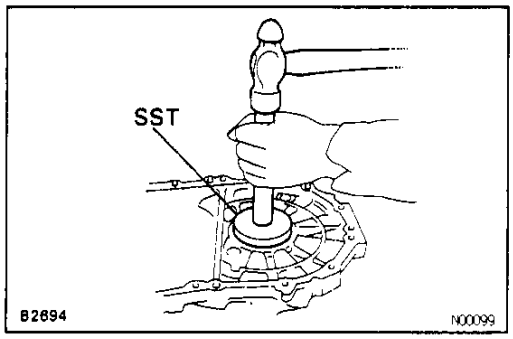

(d) Using SST and a hammer, drive in a new outer race.
SST 09608–20012 (09608–03020, 09608–03090)

Downloaded from www.Manualslib.com manuals search engine

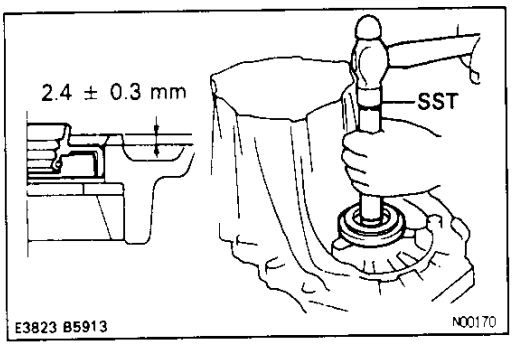

(e) Using SST and a hammer, drive in a new oil seal.
SST 09350–32014 (09351–32111, 09351–32130)
Drive in depth:
2.4 ± 0.3 mm (0.094 ± 0.012 in.)

(f) Coat the lip of the oil seal with MP grease.

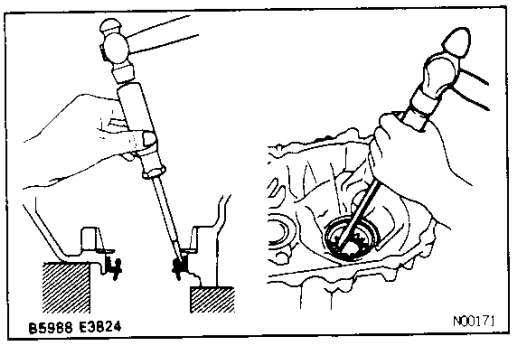

7. TRANSAXLE CASE SIDE:
IF NECESSARY, REPLACE OIL SEAL AND SIDE BEARING OUTER RACE

(a) Using a screwdriver and hammer, drive out the oil seal.

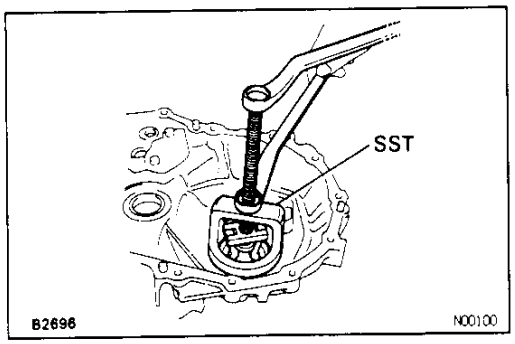

(b) Using SST, pull out the outer race and shim.
SST 09612–65014

(c) Place the shim into the differential case.

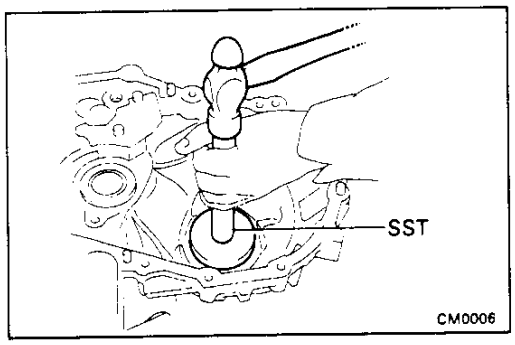

(d) Using SST and a hammer, drive in a new outer race.
SST 09608–20012 (09608–03020, 09608–03060)

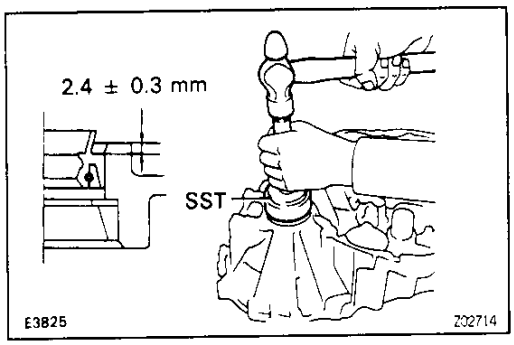

(e) Using SST and a hammer, drive in a new oil seal.
SST 09350–32014 (09351–32130, 09351–32150)
Drive in depth:
2.4 ± 0.3 mm (0.094 ± 0.012 in.)

(f) Coat the lip of the oil seal with MP grease.

Downloaded from www.Manualslib.com manuals search engine

MX049-05

DIFFERENTIAL CASE ASSEMBLY

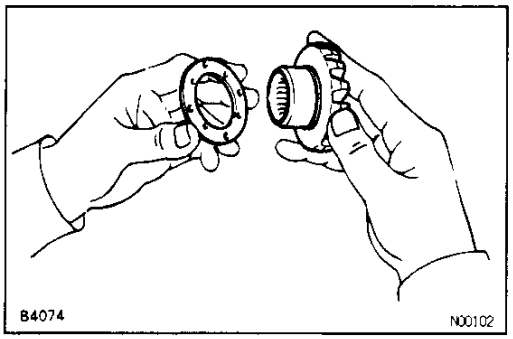

1. ASSEMBLE DIFFERENTIAL CASE

(a) Install the correct thrust washers and side gears. Referring to the table below, select thrust washers which will ensure that the backlash is within specification.

Standard backlash:

0.05–0.20 mm (0.0020–0.0079 in.)

Thickness mm (in.)	Thickness mm (in.)
0.95 (0.0374)	1.10 (0.0433)
1.00 (0.0394)	1.15 (0.0453)
1.05 (0.0413)	1.20 (0.0472)

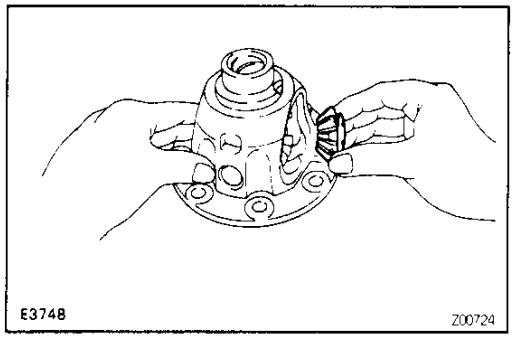

(b) Install the thrust washers and side gears in the differential case.

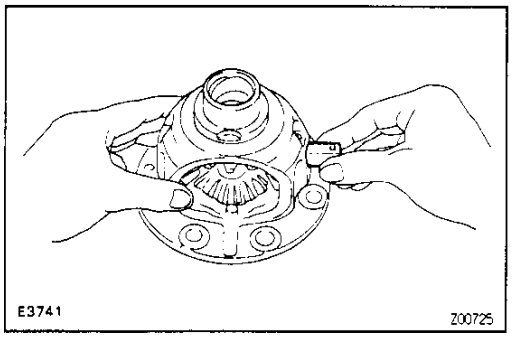

(c) Install the pinion shaft.

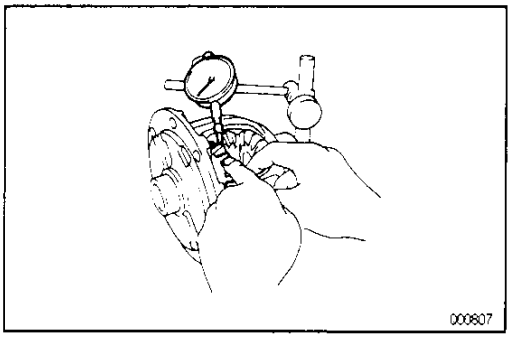

(d) Using a dial indicator, check the side gear backlash. Measure the side gear backlash while holding one pinion gear toward the case.

Standard backlash:

0.05–0.20 mm (0.0020–0.0079 in.)

If the backlash is not within specification, install a thrust washer of different thickness.

Downloaded from www.Manualslib.com manuals search engine

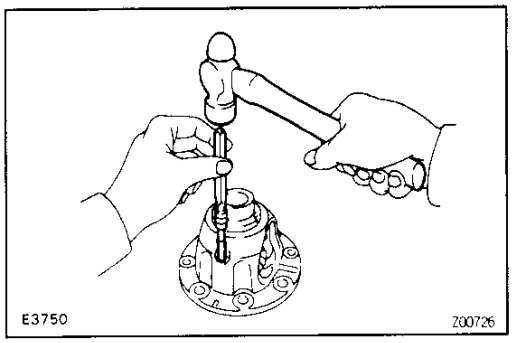

(e) Using a pin punch and hammer, drive in the straight pin through the differential case and hold in the pinion shaft.

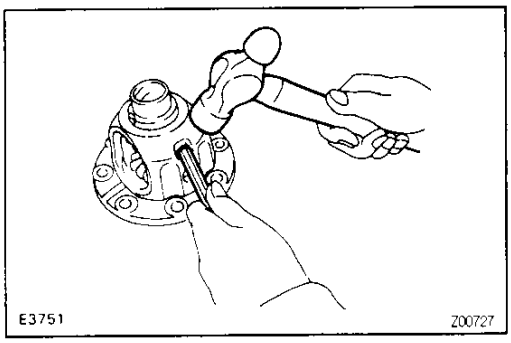

(f) Stake the differential case.

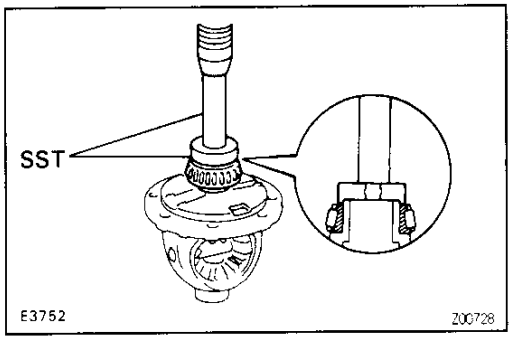

2. SPEED SENSOR (RING GEAR SIDE): INSTALL SIDE BEARING

Using SST and a press, install the side bearing.
SST 09550–10012 (09252–10010, 09556–10010)

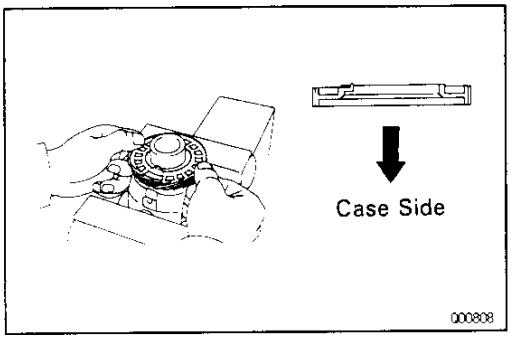

3. SPEED SENSOR (DRIVE GEAR SIDE): INSTALL SIDE BEARING

(a) Install the speed sensor drive gear.

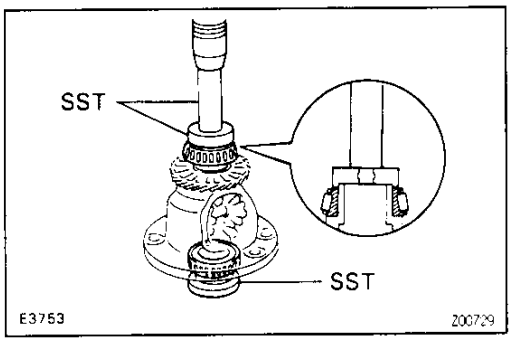

(b) Using SST and a press, install the side bearing.
SST 09550–10012 (09252–10010, 09556–10010, 09560–10010)

Downloaded from www.Manualslib.com manuals search engine

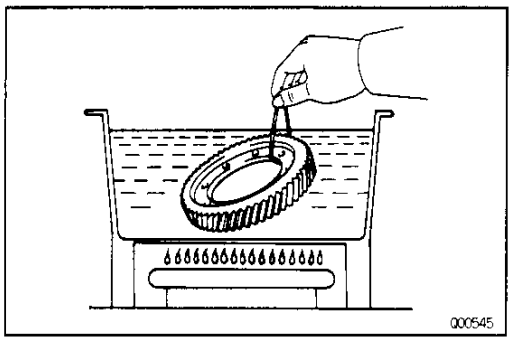

4. INSTALL RING GEAR ON DIFFERENTIAL CASE

(a) Clean the contact surface of the differential case.

(b) Heat the ring gear in boiling water.

(c) Carefully remove the ring gear from the water.

(d) After the moisture on the ring gear has completely evaporated, quickly install the ring gear to the differential case.

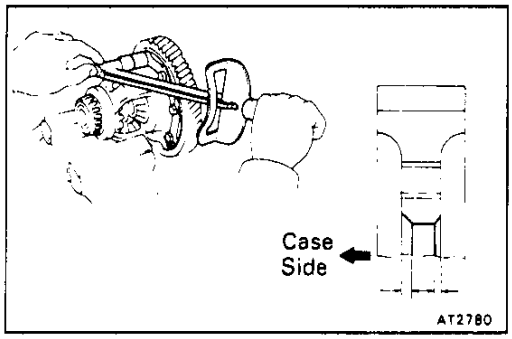

HINT: Align the matchmarks on the differential case and contact the ring gear.

(e) Temporary install the 4 lock plates and 8 bolts.
NOTICE: The ring gear set bolts should not be tightened until the ring gear has cooled sufficiently.

(f) After the ring gear has cooled sufficiently, torque the ring gear's set bolts.
Torque: 97 N·m (985 kgf·cm, 71 ft·lbf)

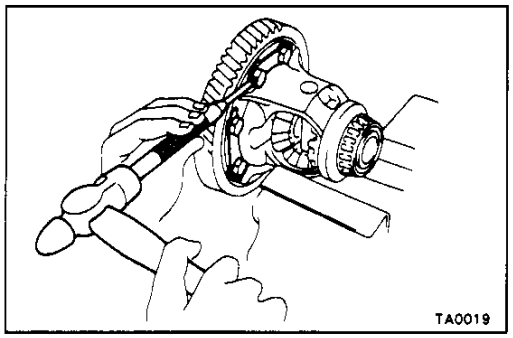

(g) Using a hammer and drift punch, stake the locking plate.
HINT: Stake one claw flush with the flat surface of the nut. For the claw contacting the protruding portion of the nut, stake only the half on the tightening side.

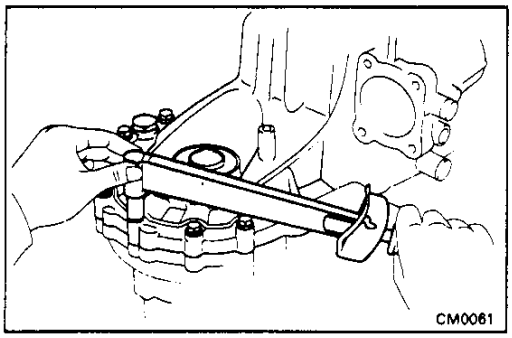

5. INSPECT DIFFERENTIAL SIDE BEARING PRELOAD

(a) Install the differential case assembly to the transaxle case.

(b) Install the transmission case.

(c) Install and torque the bolts.
Torque: 29 N·m (300 kgf·cm, 22 ft·lbf)

Downloaded from www.Manualslib.com manuals search engine

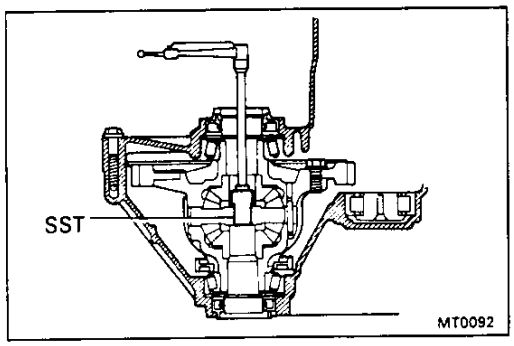

(d) Using SST and a small torque wrench, measure the preload.
SST 09564–32011
Preload (at starting):
New bearing
0.8–1.6 N·m (8–16 kgf·cm, 6.9–13.9 in.·lbf)
Reused bearing
0.5–1.0 N·m (5–10 kgf·cm, 4.3–8.7 in.·lbf)
If the preload is not within specification, remove the transmission case side outer race of the side bearing with SST.
(See page MX–58 and MX–59)
Select another shim.
HINT: The preload will change by about 0.3–0.4 N·m (3–4 kgf·cm, 2.6–3.5 in.·lbf) with each 0.05 mm change in shim thickness.

MX

Mark	Thickness mm (in.)	Mark	Thickness mm (in.)
A	2.10 (0.0827)	L	2.60 (0.1024)
B	2.15 (0.0846)	M	2.65 (0.1043)
C	2.20 (0.0866)	N	2.70 (0.1063)
D	2.25 (0.0886)	P	2.75 (0.1083)
E	2.30 (0.0906)	Q	2.80 (0.1102)
F	2.35 (0.0925)	R	2.85 (0.1122)
G	2.40 (0.0945)	S	2.90 (0.1142)
H	2.45 (0.0965)	T	2.95 (0.1161)
J	2.50 (0.0984)	U	3.00 (0.1181)
K	2.55 (0.1004)	–	–

Downloaded from www.Manualslib.com manuals search engine

COMPONENT PARTS INSTALLATION

MX063-02

BASIC SUBASSEMBLY REASSEMBLY

HINT: Coat all of the sliding and rotating surfaces with gear oil before assembly.

1. **INSPECT DIFFERENTIAL SIDE BEARING PRELOAD**

MX

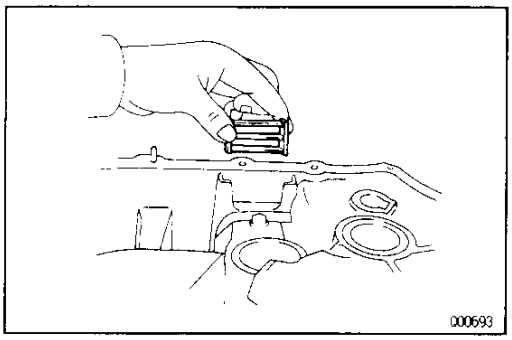

2. **INSTALL MAGNET TO TRANSAXLE CASE**

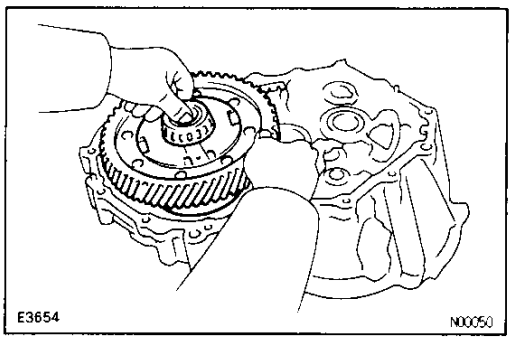

3. **INSTALL DIFFERENTIAL CASE ASSEMBLY**

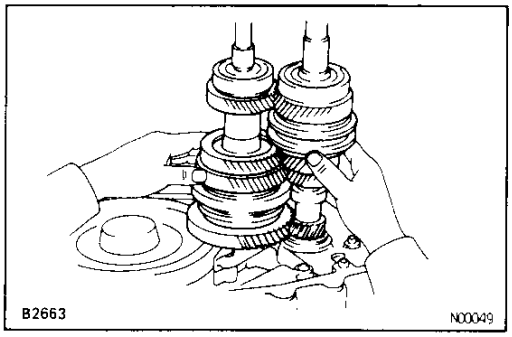

4. **INSTALL INPUT AND OUTPUT SHAFTS**
   Install the input and output shafts together.

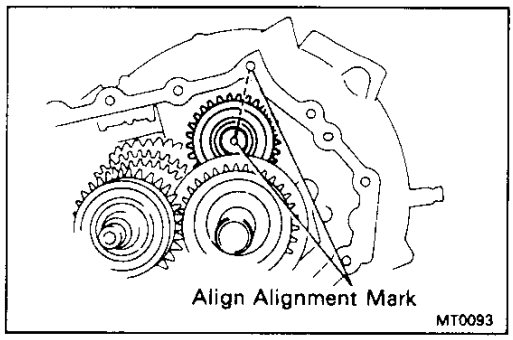

5. **INSTALL REVERSE IDLER GEAR, THRUST WASHER AND IDLER GEAR SHAFT**
   Install the reverse idler gear, thrust washer and idler gear shaft, as shown.

Downloaded from www.Manualslib.com manuals search engine

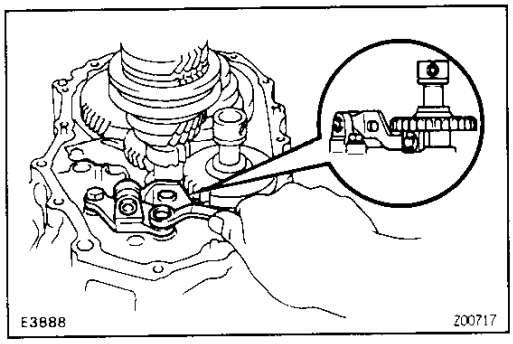

6. INSTALL REVERSE SHIFT ARM BRACKET

(a) Install the reverse shift arm bracket, as shown.

(b) Install and torque the 2 bolts.
Torque: 17 N·m (175 kgf·cm, 13 ft·lbf)

MX

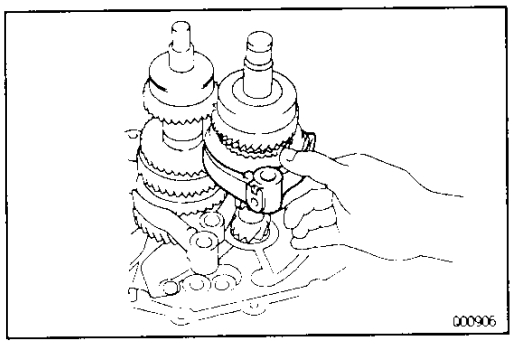

7. INSTALL SHIFT FORKS AND SHIFT FORK SHAFTS

(a) Place the No.1 and No.2 shift forks into the groove of No.1 and No.2 hub sleeves.

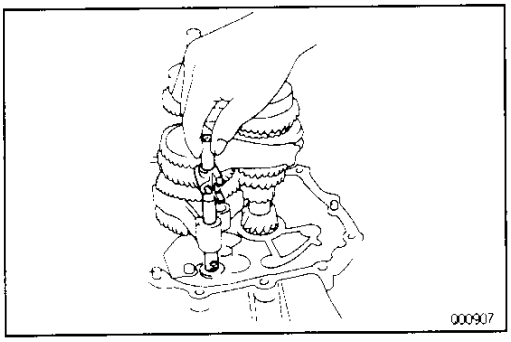

(b) Install the No.1 shift fork shaft into the No.1 shift fork hole.

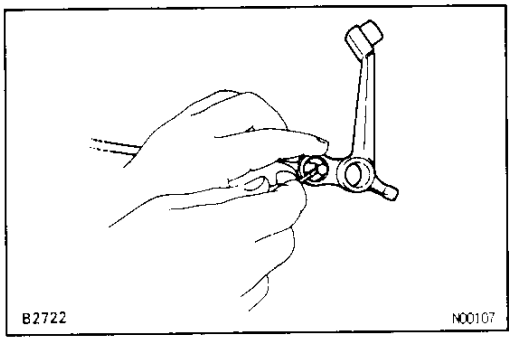

(c) Install the 2 balls into the reverse shift fork hole.

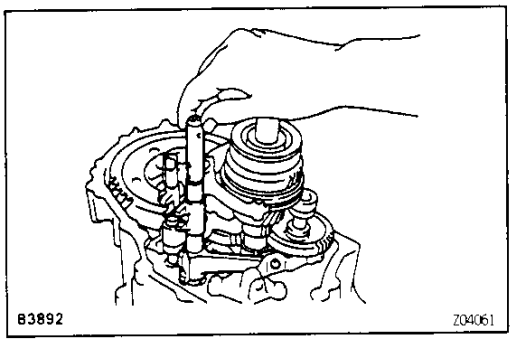

(d) Install the No.3 shift fork shaft and reverse shift fork.

Downloaded from www.Manualslib.com manuals search engine

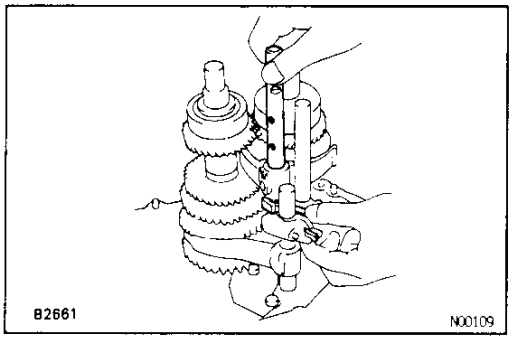

(e) Install the No.2 shift fork shaft and shift head.

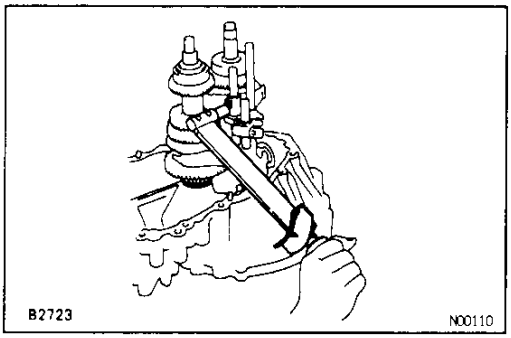

(f) Install and torque the No.1, No.2 and No.3 shift fork's 3 set bolts.
Torque: 16 N·m (160 kgf·cm, 12 ft·lbf)

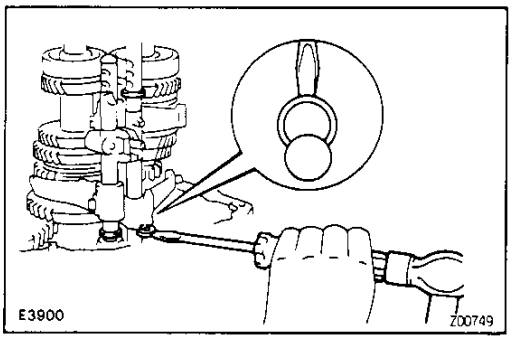

(g) Using a screwdriver and hammer, tap in the 3 snap rings.

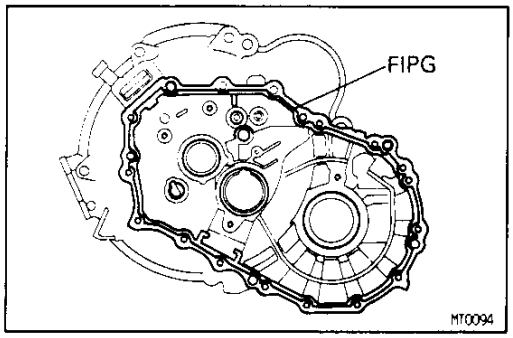

8. INSTALL TRANSAXLE CASE

(a) Remove any FIPG material and be careful not to drop oil on the contacting surface of the transmission case and transaxle case.

(b) Apply FIPG to the transaxle case, as shown in the illustration.
FIPG:
Part No. 08826–00090, THREE BOND 1281 or equivalent

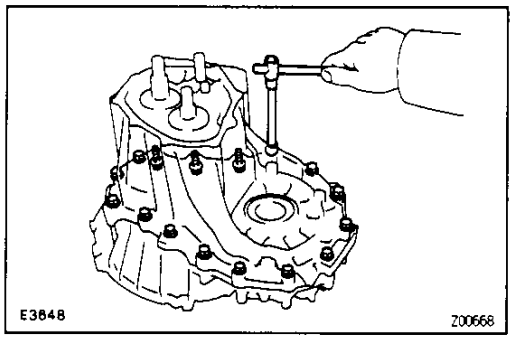

(c) Install and torque the 16 bolts.
Torque: 29 N·m (300 kgf·cm, 22 ft·lbf)

Downloaded from www.Manualslib.com manuals search engine

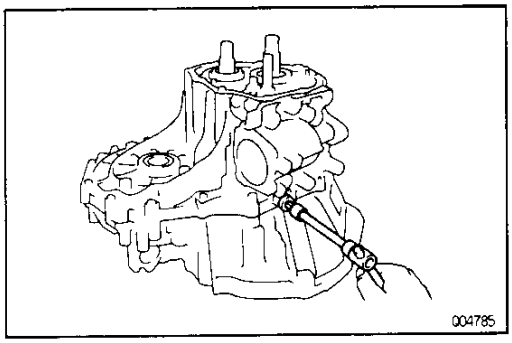

9. INSTALL LOCK BALL ASSEMBLY

(a) Apply sealant to the lock ball assembly threads.
Sealant:
Part No. 08833–00080, THEE BOND 1344, LOCTITE 242 or equivalent

(b) Using a hexagon wrench, tighten the lock ball assembly.
Torque: 39 N·m (400 kgf·cm, 29 ft·lbf)

MX

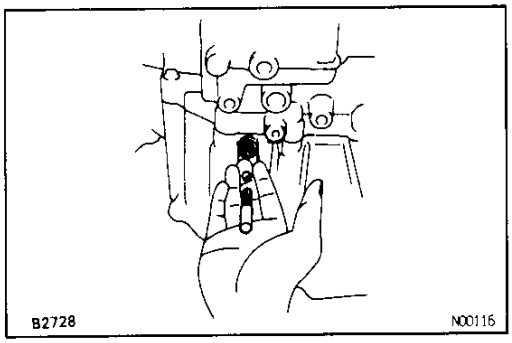

10. INSTALL BALLS, SPRINGS, SPRING SEATS AND SCREW PLUGS

(a) Install the balls, springs and spring seats into the holes.

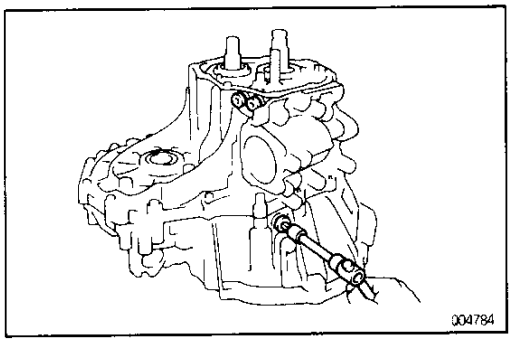

(b) Apply sealant to the plugs threads.
Sealant:
Part No. 08833–00080, THREE BOND 1344, LACTATE 242 or equivalent

(c) Using a hexagon wrench, tighten the 3 plugs.
Torque: 25 N·m (250 kgf·cm, 18 ft·lbf)

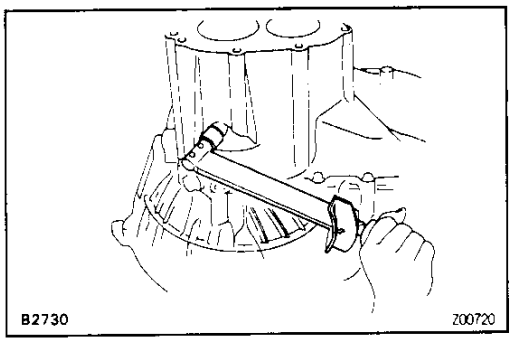

11. INSTALL AND TORQUE REVERSE IDLER GEAR SHAFT LOCK BOLT
Torque: 29 N·m (300 kgf·cm, 22 ft·lbf)

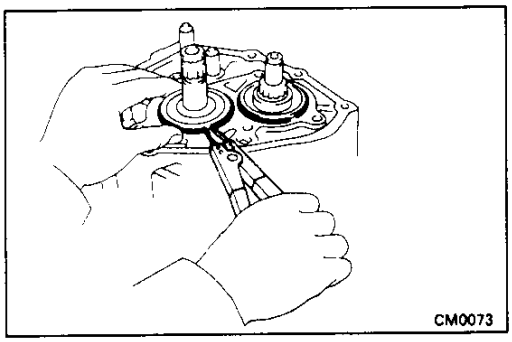

12. INSTALL BEARING SNAP RINGS
Using a snap ring expander, install the 2 snap rings.
HINT: If it is difficult to install the snap rings, pull the shafts up.

Downloaded from www.Manualslib.com manuals search engine

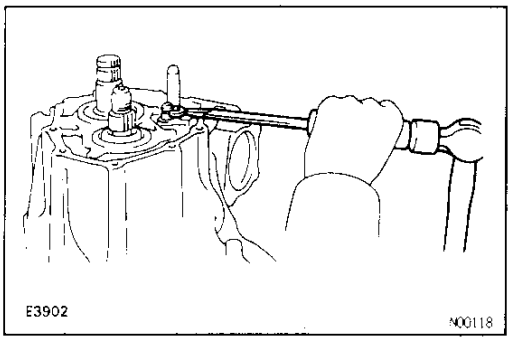

13. INSTALL SNAP RING TO NO.2 FORK SHAFT

Using a screwdriver and hammer, tap in the snap ring.

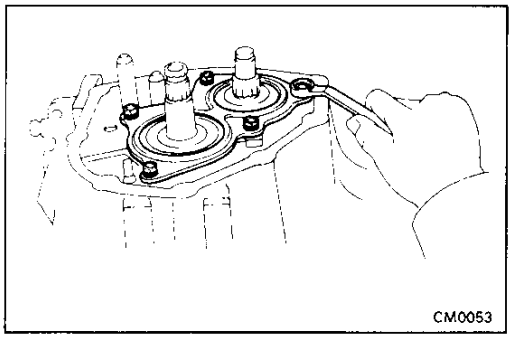

14. INSTALL REAR BEARING RETAINER

Install and torque the rear bearing retainer's 5 set bolts.

Torque: 27 N·m (280 kgf·cm, 20 ft·lbf)

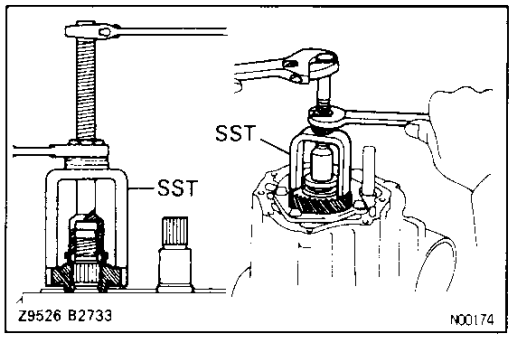

15. INSTALL 5TH DRIVEN GEAR

Using SST, install the 5th driven gear.

SST 09309–12020

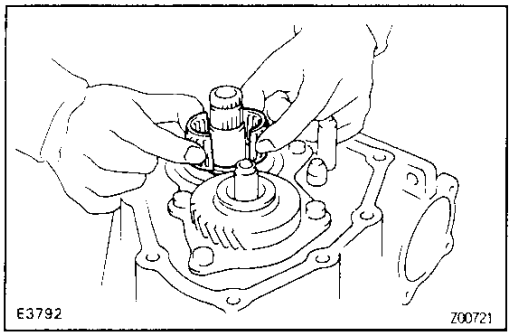

16. INSTALL SPACER, NEEDLE ROLLER BEARINGS, 5TH GEAR AND SYNCHRONIZER RING

(a) Install the spacer.

(b) Apply gear oil to the needle roller bearings.

(c) Install the needle roller bearings.

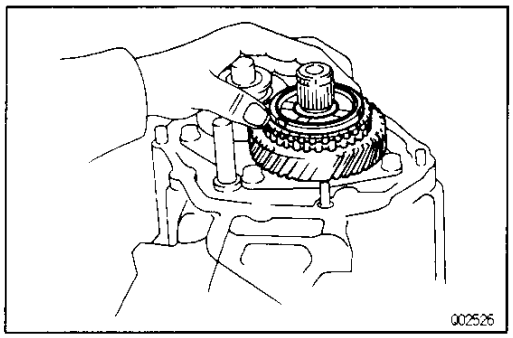

(d) Install the 5th gear and synchronizer ring.

Downloaded from www.Manualslib.com manuals search engine

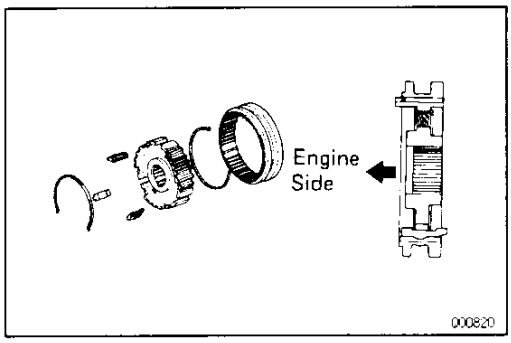

17. INSTALL NO. 3 CLUTCH HUB INTO NO. 3 HUB SLEEVE

(a) Install the 3 key springs and shifting keys.

(b) Install the No.3 hub sleeve to the No.3 clutch hub.

MX

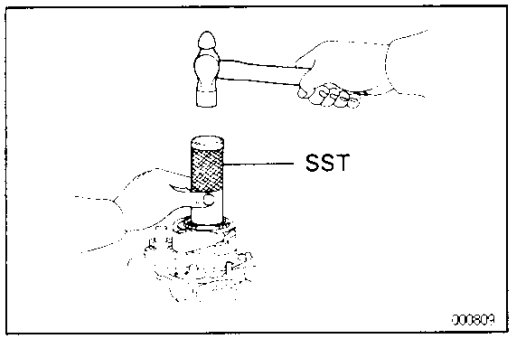

18. INSTALL NO.3 HUB SLEEVE ASSEMBLY WITH NO.3 SHIFT FORK

Using SST and a hammer, drive in the No.3 hub sleeve assembly with the No.3 shift fork.

SST 09636–20010

NOTICE: Align the synchronizer ring slots with the shifting keys.

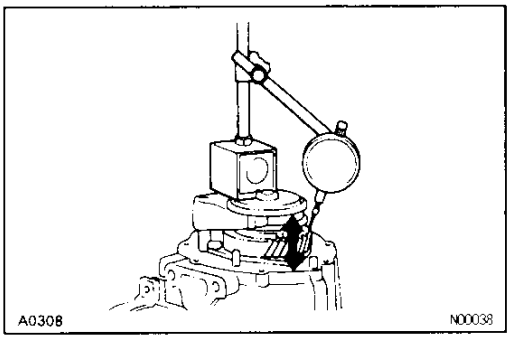

19. INSPECT 5TH GEAR THRUST CLEARANCE

Using a dial indicator, measure the thrust clearance.

Standard clearance:

0.10–0.57 mm (0.0039–0.0224 in.)

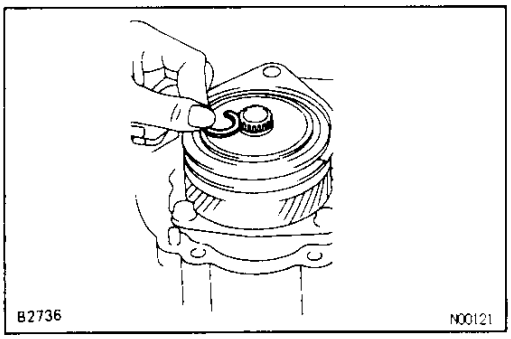

20. INSTALL SNAP RING

(a) Select a snap ring that will allow minimum axial play.

Mark	Thickness mm (in.)	Mark	Thickness mm (in.)
A	2.25 (0.0886)	E	2.49 (0.0980)
B	2.31 (0.0909)	F	2.55 (0.1004)
C	2.37 (0.0933)	G	2.61 (0.1028)
D	2.43 (0.0957)	–	–

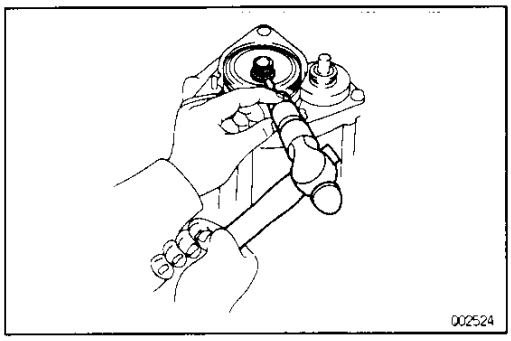

(b) Using a screwdriver and hammer, tap in the snap ring.

Downloaded from www.Manualslib.com manuals search engine

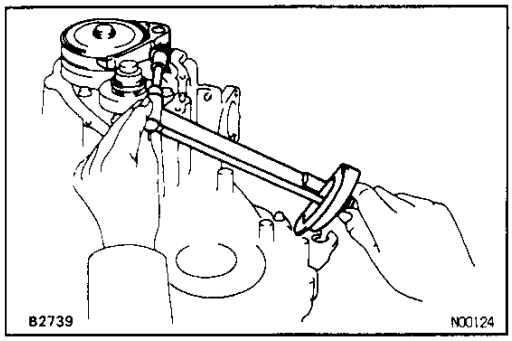

21. INSTALL AND TORQUE NO.3 SHIFT FORK'S SET BOLT
Torque: 16 N·m (160 kgf·cm, 12 ft·lbf)

MX

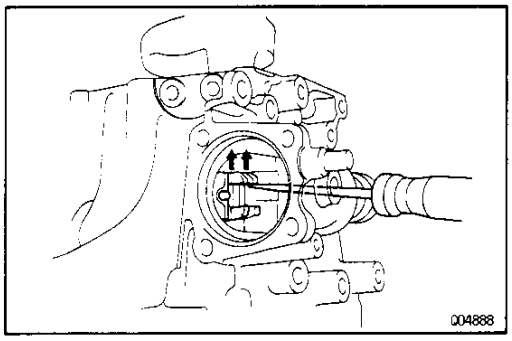

22. INSTALL LOCK NUT
(a) Using a screwdriver, engage the gear double meshing.

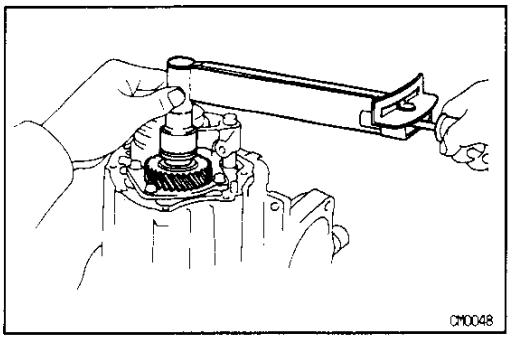

(b) Install and torque a new lock nut.
Torque: 118 N·m (1,200 kgf·cm, 87 ft·lbf)
(c) Using a screwdriver, disengage the gear double meshing.
(d) Stake the lock nut.

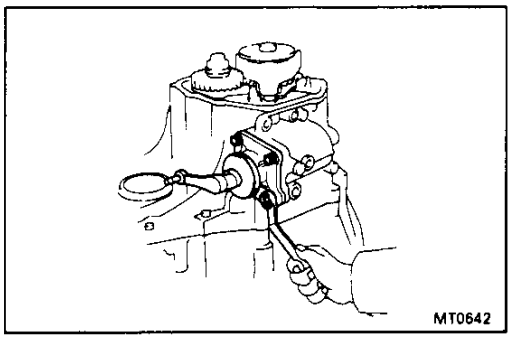

23. INSTALL SHIFT AND SELECT LEVER SHAFT ASSEMBLY
(a) Place a new gasket in position on the control shaft cover.
(b) Apply sealant to the bolt threads.
Sealant:
Part No.08833–00080, THREE BOND 1344, LOCTITE 242 or equivalent
(c) Install the shift and select lever shaft assembly and torque the 4 bolts.
Torque: 20 N·m (200 kgf·cm, 14 ft·lbf)

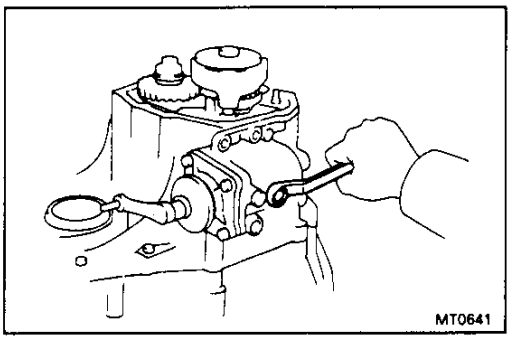

24. INSTALL AND TORQUE LOCK BOLT
Torque: 29 N·m (300 kgf·cm, 22 ft·lbf)

Downloaded from www.Manualslib.com manuals search engine

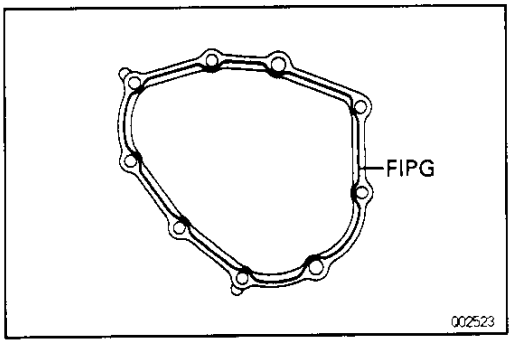

25. INSTALL TRANSMISSION CASE COVER

(a) Apply FIPG to the transmission case cover, as shown in the illustration.

FIPG:

Part No.08826–00090, THREE BOND 1281 or equivalent

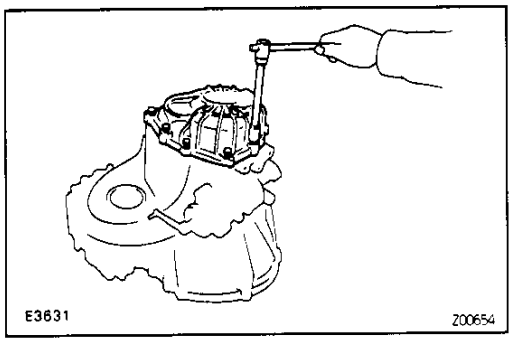

(b) Install and torque the 9 bolts.
Torque: 18 N·m (185 kgf·cm, 13 ft·lbf)

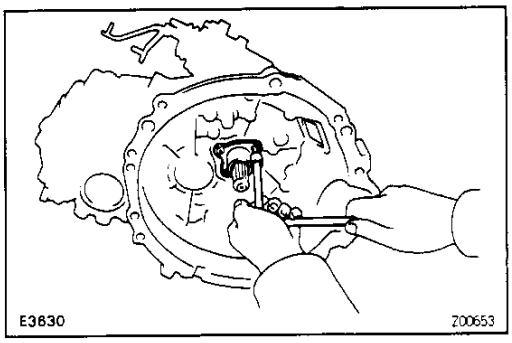

26. INSTALL FRONT BEARING RETAINER

Using a torx wrench, install and torque the front bearing retainer's 3 set torx screws.
Torque: 11 N·m (110 kgf·cm, 8 ft·lbf)
(Torx wrench T30 09042–00010)

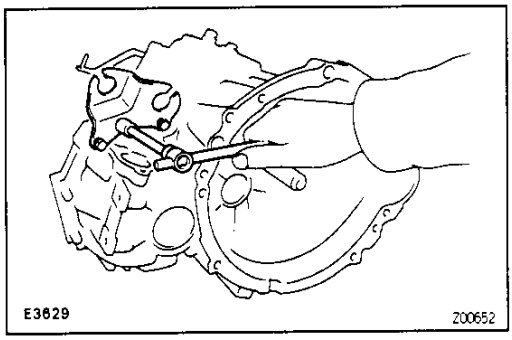

27. INSTALL CONTROL LEVER HOUSING SUPPORT BRACKET

Install and torque the control lever housing support bracket's 3 set bolts.
Torque: 11 N·m (115 kgf·cm, 8 ft·lbf)

28. INSTALL SELECTING BELLCRANK ASSEMBLY

Install and torque the selecting bellcrank assembly's 2 set bolts.
Torque: 25 N·m (250 kgf·cm, 18 ft·lbf)

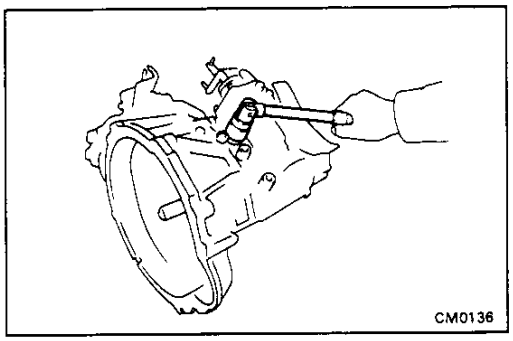

29. INSTALL BACK–UP LIGHT SWITCH

Install and torque the back–up light switch.
Torque: 40 N·m (410 kgf·cm, 30 ft·lbf)

30. INSTALL SPEED SENSOR

Install and torque the speed sensor.
Torque: 11 N·m (115 kgf·cm, 8 ft·lbf)

Downloaded from www.Manualslib.com manuals search engine

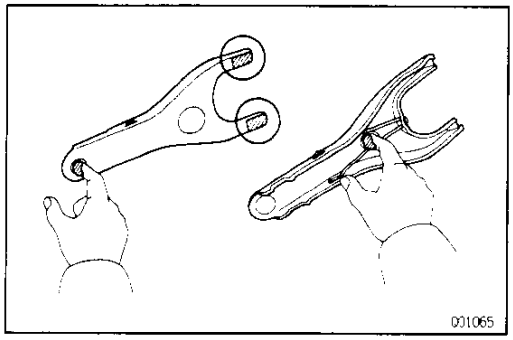

31. INSTALL CLUTCH RELEASE FORK AND BEARING

(a) Apply molybdenum disulphide lithium base grease to the following parts.

- **Release fork contact surface**
- **Release fork and push rod contact point**
- **Release fork pivot point**

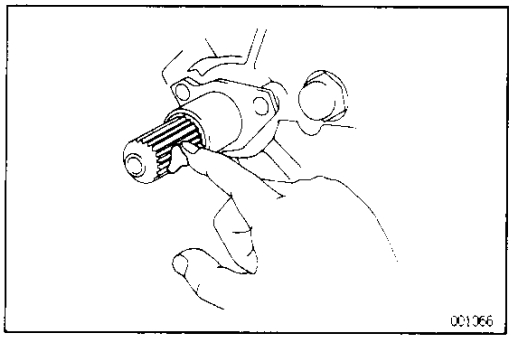

- **Input shaft spline**

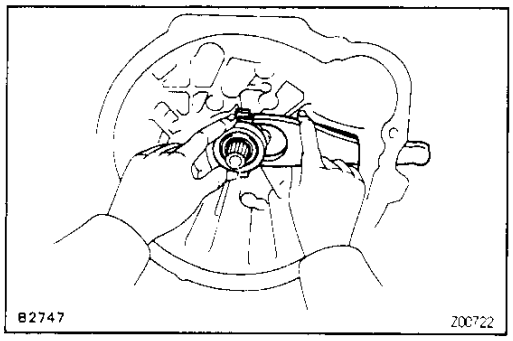

(b) Install the clutch release fork and bearing to the transaxle.

Downloaded from www.Manualslib.com manuals search engine

SHIFT LEVER AND CONTROL CABLE

MX04B-04

COMPONENTS

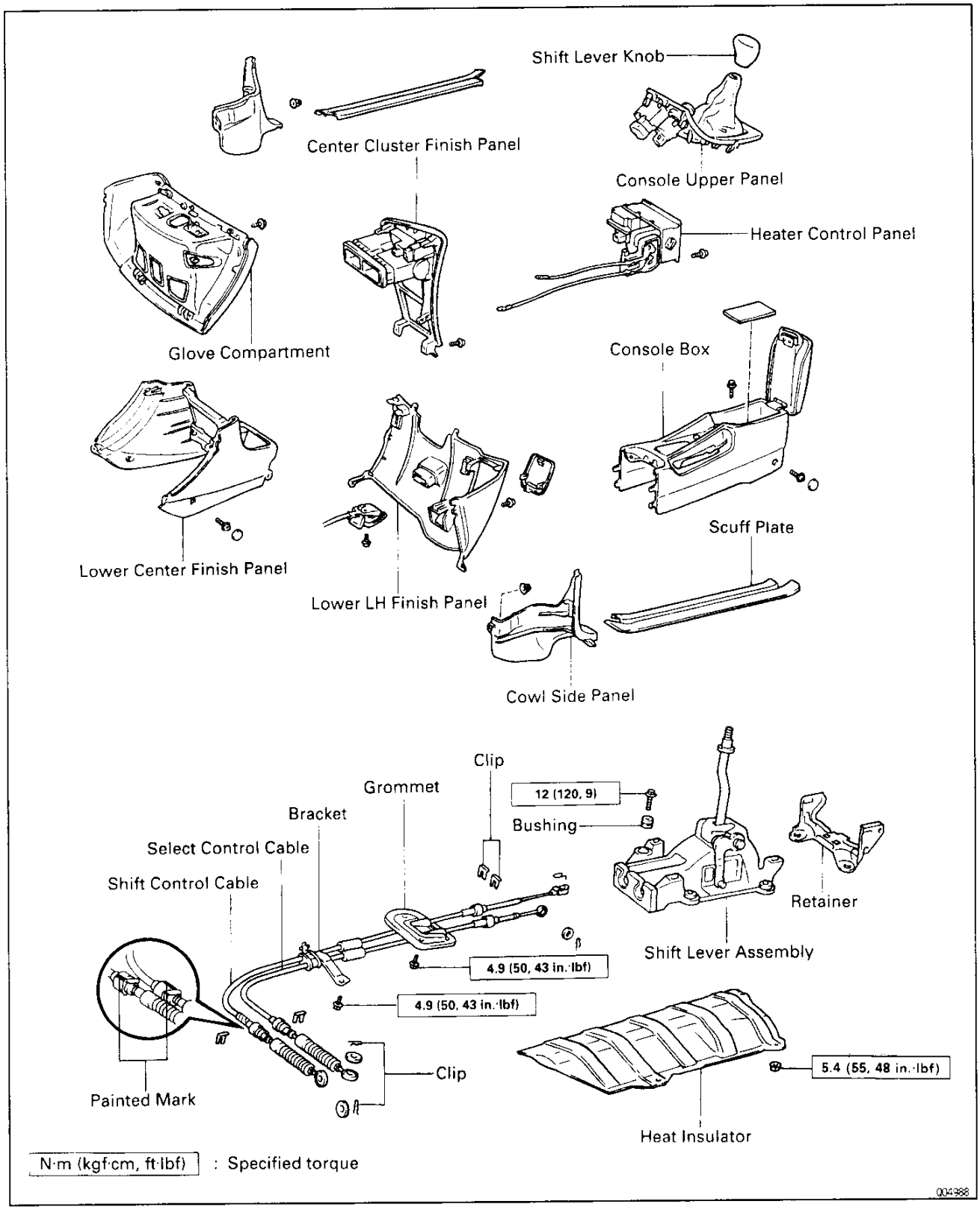

Downloaded from www.Manualslib.com manuals search engine

SERVICE SPECIFICATIONS

SERVICE DATA

MX06U-03

Input shaft roller bearing journal diameter	Limit	24.970 mm (0.9831 in.)
Input shaft 3rd gear journal diameter	Limit	30.970 mm (1.2193 in.)
Input shaft 4th gear journal diameter	Limit	28.970 mm (1.1405 in.)
Input shaft 5th gear journal diameter	Limit	24.870 mm (0.9791 in.)
Input shaft runout	Limit	0.05 mm (0.0020 in.)
Output shaft roller bearing journal diameter	Limit	32.970 mm (1.2980 in.)
Output shaft 1st gear journal diameter	Limit	37.970 mm (1.4949 in.)
Output shaft 2nd gear journal diameter	Limit	31.970 mm (1.2587 in.)
Output shaft runout	Limit	0.05 mm (0.0020 in.)
Gear thrust clearance 1st	STD	0.10 – 0.40 mm (0.0039 – 0.0157 in.)
	Limit	0.45 mm (0.0177 in.)
Gear thrust clearance 2nd	STD	0.10 – 0.45 mm (0.0039 – 0.0177 in.)
	Limit	0.50 mm (0.0197 in.)
Gear thrust clearance 3rd	STD	0.10 – 0.35 mm (0.0039 – 0.0138 in.)
	Limit	0.40 mm (0.0157 in.)
Gear thrust clearance 4th	STD	0.10 – 0.55 mm (0.0039 – 0.0217 in.)
	Limit	0.60 mm (0.0236 in.)
Gear thrust clearance 5th	STD	0.10 – 0.57 mm (0.0039 – 0.0244 in.)
	Limit	0.65 mm (0.0256 in.)
Gear radial clearance 1st, 2nd, 3rd, 4th and 5th	STD	0.015 – 0.058 mm (0.0006 – 0.0023 in.)
	Limit	0.070 mm (0.0028 in.)
Shift fork to hub sleeve clearance	Limit	1.0 mm (0.039 in.)
Synchronizer ring to gear clearance	Limit	0.6 mm (0.024 in.)
Drive in depth		
Control shaft cover oil seal		1.0 – 2.0 mm (0.039 – 0.079 in.)
Transmission case oil seal		2.4 ± 0.3 (0.094 ± 0.012 in.)
Transaxle case oil seal		2.4 ± 0.3 (0.094 ± 0.012 in.)
Select inner lever slotted spring pin		0 ± 0.5 mm (0 ± 0.020 in.)
No. 1 shift inner lever slotted spring pin		0 ± 0.5 mm (0 ± 0.020 in.)
No. 2 shift inner lever slotted spring pin		3.5 ± 0.5 mm (0.138 ± 0.020 in.)
Input shaft snap ring thickness		
No.2 clutch hub	Mark 0	2.30 mm (0.0906 in.)
	Mark 1	2.36 mm (0.0929 in.)
	Mark 2	2.42 mm (0.0953 in.)
	Mark 3	2.48 mm (0.0976 in.)
	Mark 4	2.54 mm (0.1000 in.)
	Mark 5	2.60 mm (0.1024 in.)
Rear bearing	Mark A	2.29 mm (0.0902 in.)
	Mark B	2.35 mm (0.0925 in.)
	Mark C	2.41 mm (0.0949 in.)
	Mark D	2.47 mm (0.0972 in.)
	Mark E	2.53 mm (0.0996 in.)
	Mark F	2.59 mm (0.1020 in.)

Downloaded from www.Manualslib.com manuals search engine

Output shaft snap ring thickness		
No.1 clutch hub	Mark A	2.50 mm (0.0984 in.)
	Mark B	2.56 mm (0.1008 in.)
	Mark C	2.62 mm (0.1031 in.)
	Mark D	2.68 mm (0.1055 in.)
	Mark E	2.74 mm (0.1079 in.)
	Mark F	2.80 mm (0.1102 in.)
No.3 clutch hub	Mark A	2.25 mm (0.0886 in.)
	Mark B	2.31 mm (0.0909 in.)
	Mark C	2.37 mm (0.0933 in.)
	Mark D	2.43 mm (0.0957 in.)
	Mark E	2.49 mm (0.0980 in.)
	Mark F	2.55 mm (0.1004 in.)
	Mark G	2.61 mm (0.1028 in.)
Differential side bearing preload (at starting)		
	New bearing	0.8 – 1.6 N·m 8 – 16 kgf·cm 6.9 – 13.9 in.·lbf
	Reused bearing	0.5 – 1.0 N·m 5 – 10 kgf·cm 4.3 – 8.7 in.·lbf
Differential pinion to side gear backlash		0.05 – 0.20 mm (0.0020 – 0.0079 in.)
Differential side gear thrust washer thickness		
	None Mark	0.95 mm (0.0374 in.)
	None Mark	1.00 mm (0.0394 in.)
	None Mark	1.05 mm (0.0413 in.)
	None Mark	1.10 mm (0.0433 in.)
	None Mark	1.15 mm (0.0453 in.)
	None Mark	1.20 mm (0.0472 in.)
Differential side bearing adjusting shim thickness		
	Mark A	2.10 mm (0.0827 in.)
	Mark B	2.15 mm (0.0846 in.)
	Mark C	2.20 mm (0.0866 in.)
	Mark D	2.25 mm (0.0886 in.)
	Mark E	2.30 mm (0.0906 in.)
	Mark F	2.35 mm (0.0925 in.)
	Mark G	2.40 mm (0.0945 in.)
	Mark H	2.45 mm (0.0965 in.)
	Mark J	2.50 mm (0.0984 in.)
	Mark K	2.55 mm (0.1004 in.)
	Mark L	2.60 mm (0.1024 in.)
	Mark M	2.65 mm (0.1043 in.)
	Mark N	2.70 mm (0.1063 in.)
	Mark P	2.75 mm (0.1083 in.)
	Mark Q	2.80 mm (0.1102 in.)
	Mark R	2.85 mm (0.1122 in.)
	Mark S	2.90 mm (0.1142 in.)
	Mark T	2.95 mm (0.1161 in.)
	Mark U	3.00 mm (0.1181 in.)

Downloaded from www.Manualslib.com manuals search engine

MX06V-04

TORQUE SPECIFICATIONS

Part tightened		N·m	kgf·cm	ft·lbf
Transaxle x Engine	12 mm bolt	64	650	47
	10 mm bolt	46	470	34
Transaxle x Engine (Rear end plate side)		23	230	17
Engine left mounting bracket x Engine left mounting insulator		64	650	47
Engine front mounting bracket x Transaxle		77	790	57
Engine front mounting bracket x Engine front mounting insulator		87	890	64
Engine rear mounting bracket x Transaxle		77	790	57
Engine rear mounting bracket x Engine rear mounting insulator		87	890	64
Center crossmember x Body		35	360	26
Center crossmember x Engine front mounting insulator		80	820	59
Center crossmember x Engine rear mounting insulator		80	820	59
Starter x Transaxle		39	400	29
Exhaust pipe support bracket x Engine rear mounting insulator		19	195	14
Exhaust pipe support bracket x Suspension member		19	195	14
Exhaust front pipe x Exhaust center pipe		42	430	31
Exhaust front pipe x Exhaust manifold		61	630	46
Oxygen sensor x Exhaust front pipe		20	200	14
Exhaust front pipe x Exhaust pipe support bracket		25	250	18
Clutch release cylinder x Transaxle		12	120	9
Shift lever assembly x Body		12	120	9
Grommet x Body		4.9	50	43 in.·lbf
Transmission control cable bracket x Body		4.9	50	43 in.·lbf
Heat Insulator x Body		5.4	55	48 in.·lbf
Transmission case x Transaxle case		29	300	22
Transmission case x Transmission case cover		18	185	13
Output shaft front bearing lock plate		11	115	8
Straight screw plug (Reverse restrict pin)		13	130	9
Straight screw plug		25	250	18
Transaxle case receiver x Transaxle case		11	115	8
Differential case x Ring gear		97	985	71
Reverse shift arm bracket set bolt		17	175	13
No. 1, No. 2 and No. 3 shift fork set bolt		16	160	12
Lock ball assembly		39	400	29
Reverse idler gear shaft lock bolt		29	300	22
Rear bearing retainer x Transmission case		27	280	20
5th driven gear lock nut		118	1,200	87
Shift and select lever shaft assembly x Transmission case		20	200	14
Shift and select lever shaft assembly lock bolt		29	300	22
Front bearing retainer x Clutch housing		11	110	8
Control lever housing support bracket x Transaxle case		11	115	8
No. 1 and No. 2 oil receiver pipe set bolt		17	175	13
Selecting bellcrank assembly x Transmission case		25	250	18
Back—up light switch		40	410	30
Speed sensor		11	115	8
Filler and Drain plugs		39	400	29
Clutch release fork support		37	375	27

Downloaded from www.Manualslib.com manuals search engine

S54 MANUAL TRANSAXLE

DESCRIPTION ..... MX– 2
OPERATION ..... MX– 3
PREPARATION ..... MX– 4
TROUBLESHOOTING ..... MX– 7
PRECAUTION ..... MX– 7
ASSEMBLY REMOVAL
AND INSTALLATION ..... MX– 8
COMPONENT PARTS REMOVAL ..... MX– 20
INPUT SHAFT ..... MX– 33
OUTPUT SHAFT ..... MX– 40
SHIFT AND SELECT LEVER SHAFT ..... MX– 48
DIFFERENTIAL CASE ..... MX– 53
COMPONENT PARTS INSTALLATION ..... MX– 61
SHIFT LEVER AND CONTROL CABLE ..... MX– 70
SERVICE SPECIFICATIONS ..... MX– 71

Downloaded from www.Manualslib.com manuals search engine

DESCRIPTION

GENERAL

MX01R-0N

- A triple–cone type synchromesh mechanism is used in the 2nd gear to improve the shift feeling characteristics. This helps to reduce the shifting effort.
- A reverse synchromesh mechanism is used to suppress gear engagement noise in reverse gear shifting.

MX

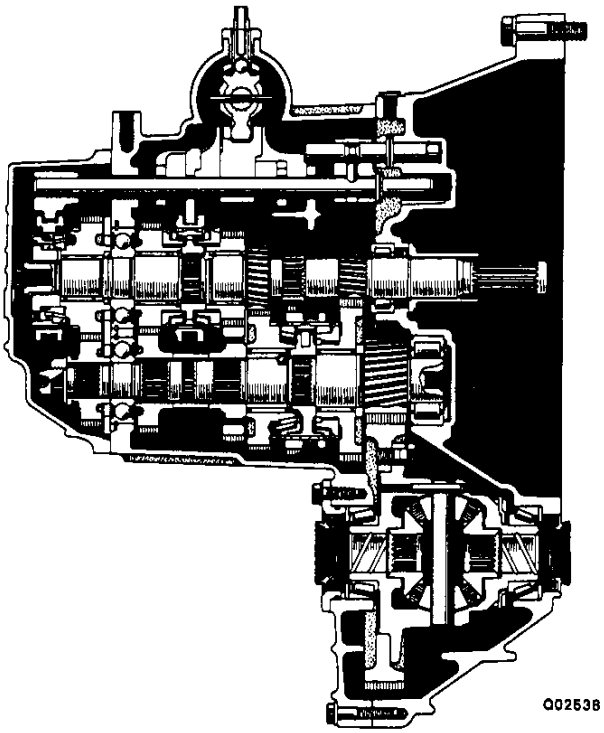

V04838

Type of Transaxle		S54
Type of Engine		5S–FE, 3S–FE, 3S–GE
Gear Ratio	1st gear	3.285
	2nd gear	1.960
	3rd gear	1.322
	4th gear	1.028
	5th gear	0.820
	Reverse gear	3.153
Differential Gear Ratio		3.944 *1 4.176 *2 3.736
Oil Capacity		2.8 liters (2.7 US qts, 2.3 Imp. qts)
Oil Viscosity		SAE 75W–90
Oil Grade		API GL–3, GL–4 or ATF DEXRON® II

*1: For Australia

*2: For G.C.C.

Downloaded from www.Manualslib.com manuals search engine

OPERATION

MX024-03

- **The illustration below show the engagements of transaxle gears.**

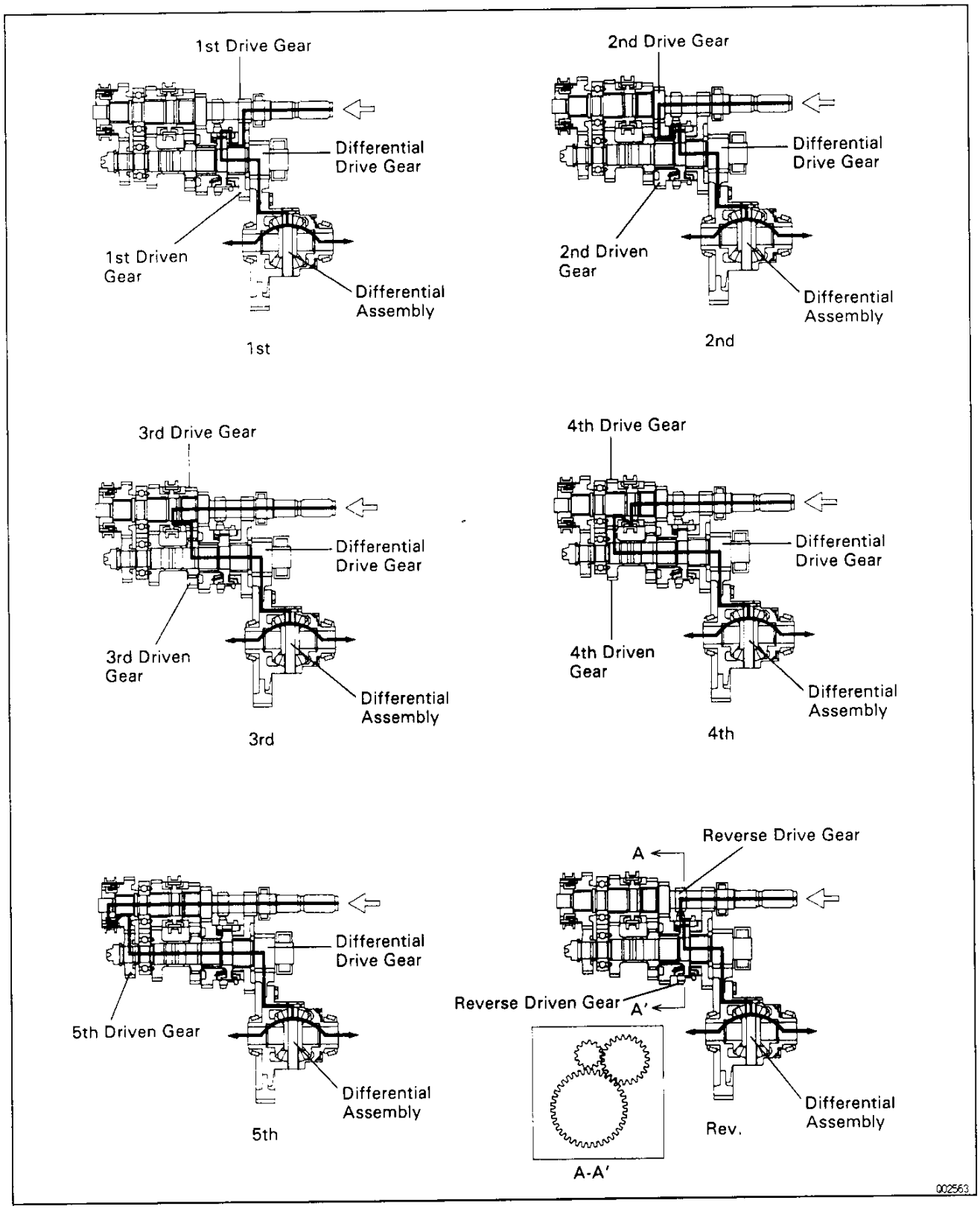

MX

Downloaded from www.Manualslib.com manuals search engine

PREPARATION

SST (SPECIAL SERVICE TOOLS)

MX028-08

	09308-00010 Oil Seal Puller	Input shaft front bearing Output shaft front bearing
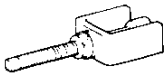	09309-12020 5th Driven Gear Replacer	
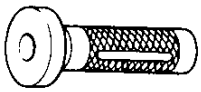	09310-35010 Countershaft Bearing Replacer	Input shaft front bearing Output shaft front bearing
	09316-60010 Transmission & Transfer Bearing Replacer	
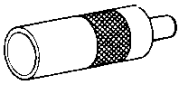	(09316-00010) Replacer Pipe	
	(09316-00040) Replacer "C"	
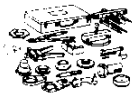	09350-32014 TOYOTA Automatic Transmission Tool Set	
	(09351-32120) Overdrive Bearing Replacer	Differential side bearing
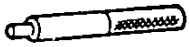	(09351-32130) Handle	
	(09351-32150) Oil Seal Replacer	Differential side bearing Oil seal (Transaxle case side)
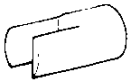	09564-32011 Differential Preload Adaptor	
	09608-12010 Front Hub & Drive Pinion Bearing Replacer Set	
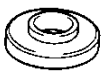	(09608-00070) Drive Pinion Rear Bearing Cone Replacer	Input shaft rear bearing 4th drive gear and rear bearing

Downloaded from www.Manualslib.com manuals search engine

S54 MANUAL TRANSAXLE – PREPARATION

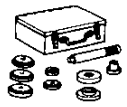	09608–20012	Front Hub & Drive Pinion Bearing Tool Set	
	(09608–00080)	Replacer	Input shaft front oil seal Control shaft cover oil seal
	(09608–03020)	Handle	
	(09608–03060)	Replacer	Differential taper roller bearing outer race
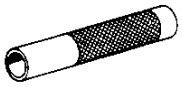	09612–22011	Tilt Handle Bearing Replacer	Output shaft rear bearing No.3 clutch hub
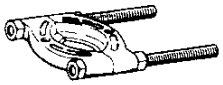	09950–00020	Bearing Remover	
	09950–00030	Bearing Remover Attachment	
	09950–30010	Puller A Set	
	09950–40010	Puller B Set	

MX

Downloaded from www.Manualslib.com manuals search engine

RECOMMENDED TOOLS

MX026-01

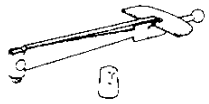	09025-00010	Small Torque Wrench	Differential preload
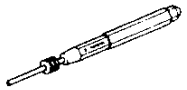	09031-00030	Pin Punch	
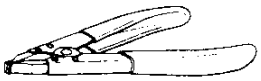	09905-00012	Snap Ring No. 1 Expander	

MX

EQUIPMENT

MX027-01

Dial indicator	
Torque wrench	
Feeler gauge	

LUBRICANT

MX028-01

Item	Capacity	Classification
Manual transaxle oil	2.6 liters (2.7 US qts, 2.3 Imp.qts)	API GL-3, GL-4 or ATF DEXRON® II SAE 75W-90

SSM (SPECIAL SERVICE MATERIALS)

MX029-01

08826-00090	Seal Packing 1281, THREE BOND 1281 or equivalent (FIPG)	Transmission case x Transaxle case Transmission case x Case cover
08833-00080	Adhesive 1344, THREE BOND 1344, LOCTITE 242 or equivalent	Straight screw plug Control shaft cover bolt

Downloaded from www.Manualslib.com manuals search engine

TROUBLESHOOTING

MX02A–01

Use the table below to help you find the cause of the problem. The numbers indicate the priority of the likely cause of the problem. Check each part in order. If necessary, replace these parts.

See Page	–	MX-2	–	MX-20	MX-20	MX-20	MX-70	MX-20	MX-20	MX-20	MX-20	MX-33,40	MX-33,40			
Parts Name / Trouble	Oil (Level low)	Oil (Wrong)	Oil (Level too high)	Gasket (Damaged)	Oil seal (Worn or damaged)	O-Ring (Worn or damaged)	Control cable (Faulty)	Locking ball spring (Damaged)	Shift fork (Worn)	Gear (Worn or damaged)	Bearing (Worn or damaged)	Synchronizer ring (Worn or damaged)	Shifting key spring (Damaged)			
Noise	1	2								3	3					
Oil leakage			1	2	2	3										
Hard to shift or will not shift							1					2	3			
Jumps out of gear								1	2	3	3					

V00310

PRECAUTION

MX022–0E

When working with FIPG material, you must observe the following.

- Using a razor blade and gasket scraper, remove all the old FIPG material from the gasket surfaces.
- Thoroughly clean all components to remove all the loose material.
- Clean both sealing surfaces with a non–residue solvent.
- Apply the FIPG in an approx. 1 mm (0.04 in.) wide bead along the sealing surface.
- Parts must be assembled within 10 minutes of application. Otherwise, the FIPG material must be removed and reapplied.

Downloaded from www.Manualslib.com manuals search engine

ASSEMBLY REMOVAL AND INSTALLATION

MX085-01

Remove and install the parts as shown below.

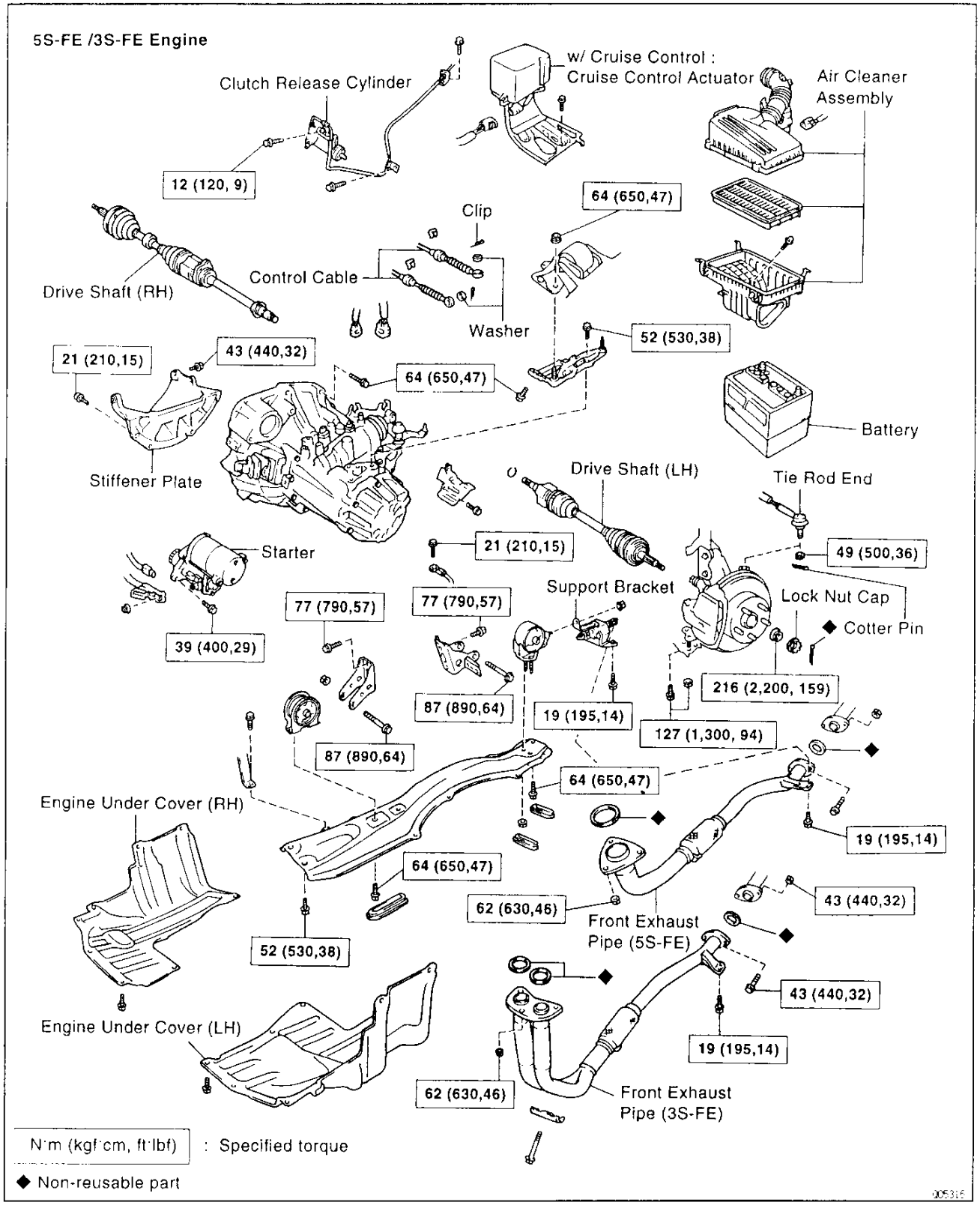

Downloaded from www.Manualslib.com manuals search engine

3S-GE Engine

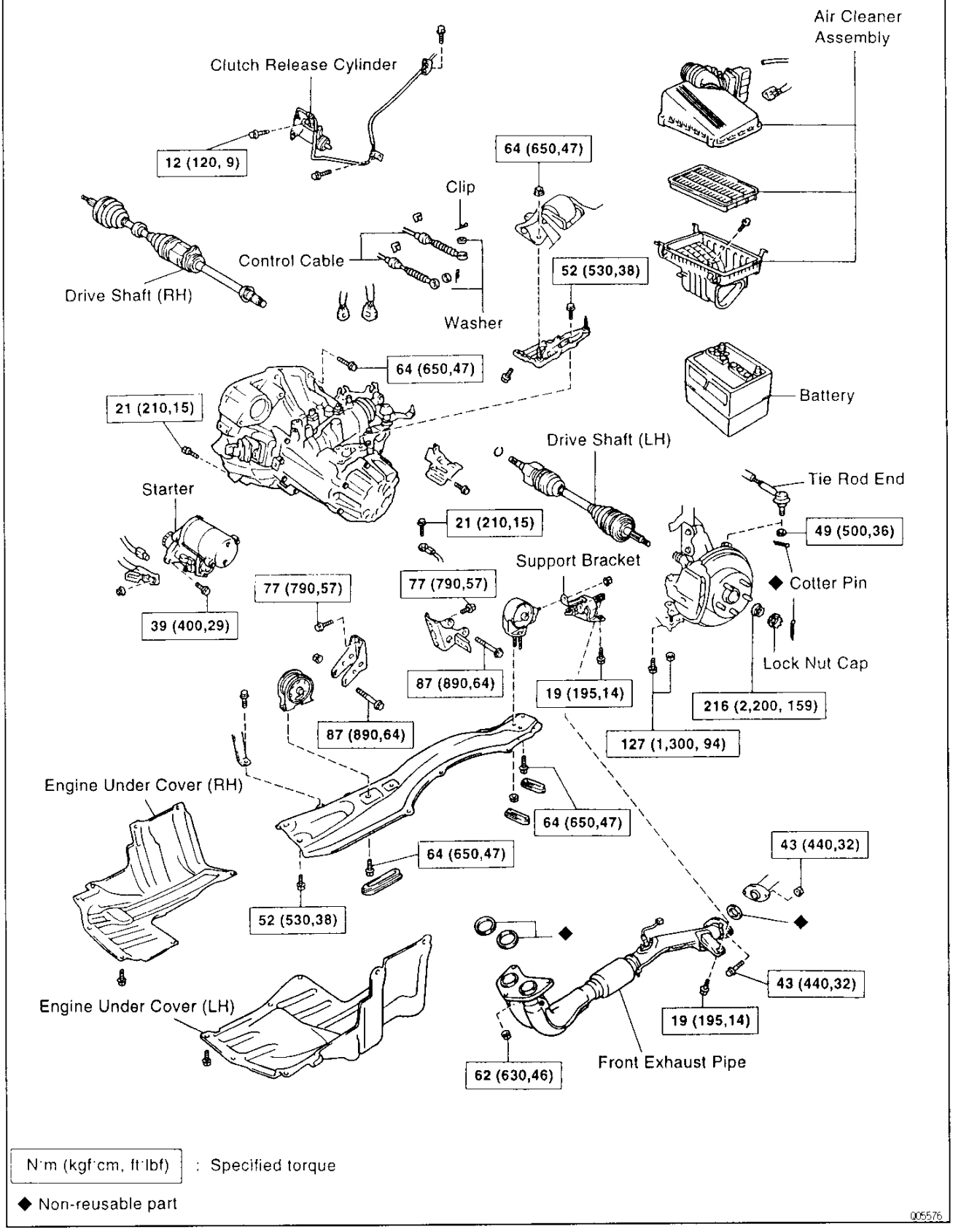

N·m (kgf·cm, ft·lbf) : Specified torque

◆ Non-reusable part

005576

Downloaded from www.Manualslib.com manuals search engine

MX066-01

TRANSAXLE REMOVAL

1. DISCONNECT NEGATIVE (–) TERMINAL CABLE FROM BATTERY

CAUTION: Work must be started after 90 seconds from the time the ignition switch is turned to the "LOCK" position and the negative (–) terminal cable is disconnected from the battery.

2. REMOVE BATTERY AND AIR CLEANER CASE ASSEMBLY WITH AIR HOSE

MX

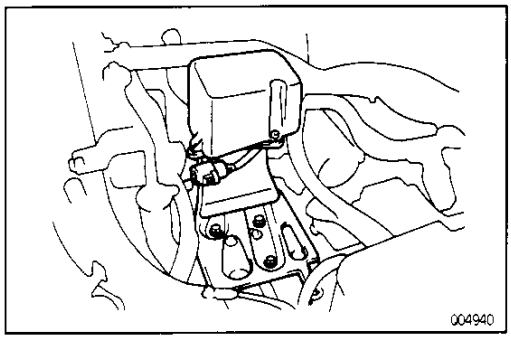

3. w/ CRUISE CONTROL:
REMOVE CRUISE CONTROL ACTUATOR

(a) Disconnect the connector.

(b) Remove the 3 bolts and cruise control actuator with bracket.

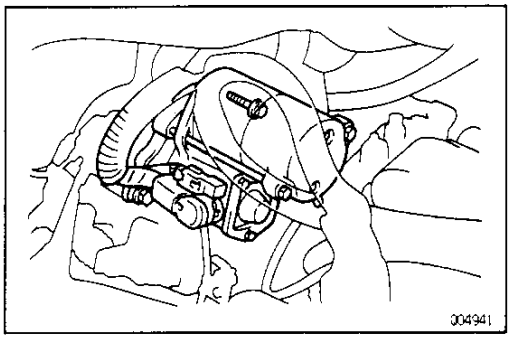

4. REMOVE STARTER

(a) Disconnect the connector and wire from the starter.

(b) Remove the 2 bolts and starter.

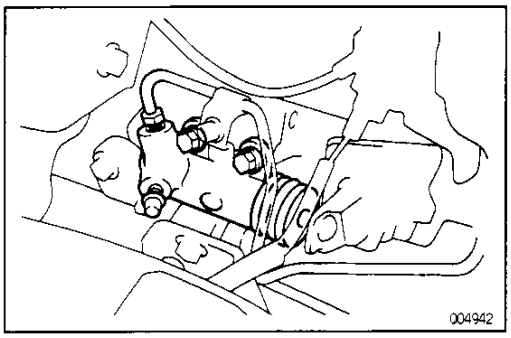

5. REMOVE CLUTCH RELEASE CYLINDER AND TUBE CLAMPS

5S–FE/3S–FE Engine:

(a) Remove the 2 bolts and release cylinder.

(b) Remove the 2 bolts and 2 tube clamps.

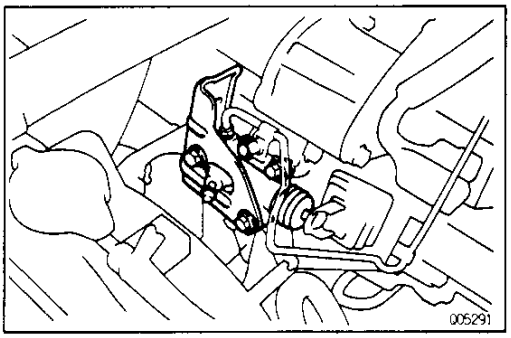

3S–GE Engine:

(a) Remove the 2 bolts and heat insulator.

(b) Remove the 2 bolts and release cylinder.

(c) Remove the 2 bolts and 2 tube clamps.

Downloaded from www.Manualslib.com manuals search engine

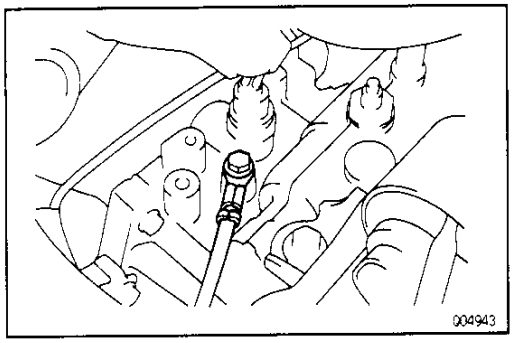

6. REMOVE GROUND CABLE

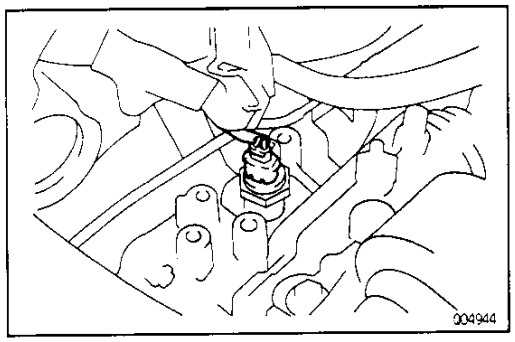

7. DISCONNECT BACK–UP LIGHT SWITCH CONNECTOR

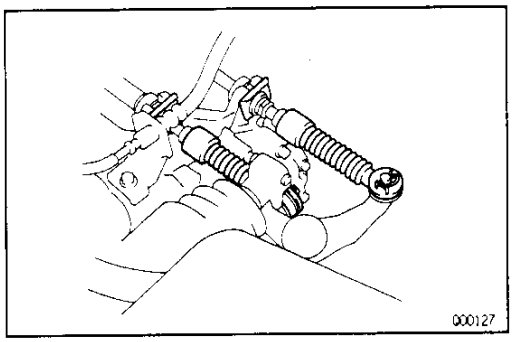

8. DISCONNECT CONTROL CABLES

(a) Remove the 2 clips and washers.

(b) Remove the 2 clips from the cables.

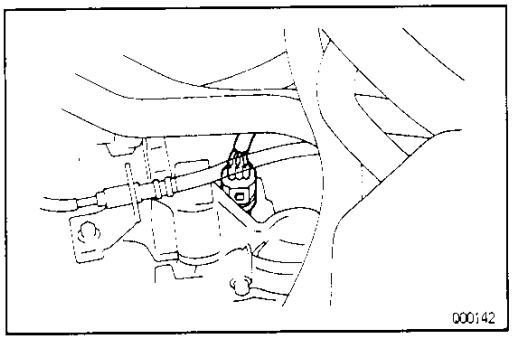

9. DISCONNECT SPEED SENSOR CONNECTOR

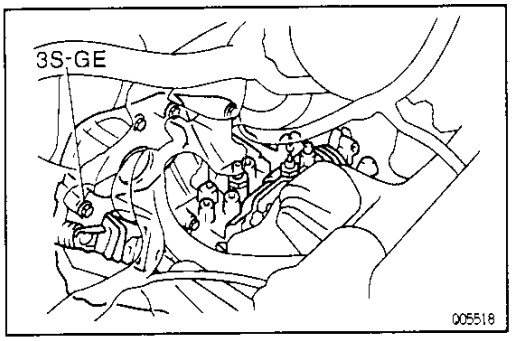

10. REMOVE TRANSAXLE MOUNTING BOLTS

5S–FE/3S–FE Engine:

Remove the 3 bolts of transaxle case upper side.

3S–GE Engine:

Remove the 4 bolts of transaxle case upper side.

Downloaded from www.Manualslib.com manuals search engine

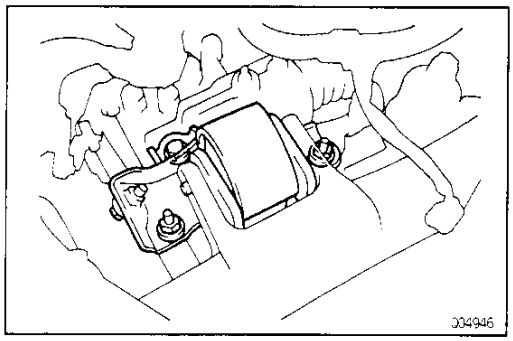

11. REMOVE ENGINE LEFT MOUNTING BOLT AND NUTS

Remove the bolt and 2 nuts of engine left mounting upper side.

MX

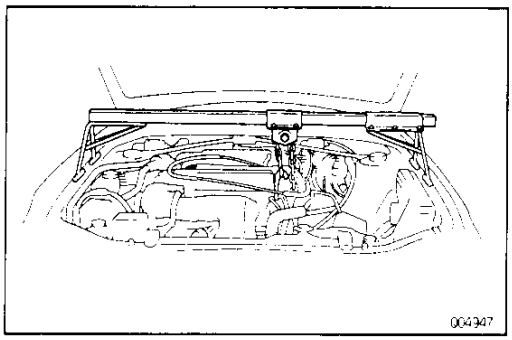

12. INSTALL ENGINE SUPPORT FIXTURE

13. REMOVE FRONT WHEEL

14. RAISE VEHICLE

NOTICE: Be sure the vehicle is securely supported.

15. REMOVE UNDER COVERS

16. DRAIN TRANSAXLE OIL OR FLUID

17. REMOVE LH AND RH DRIVE SHAFTS

(See page SA–61)

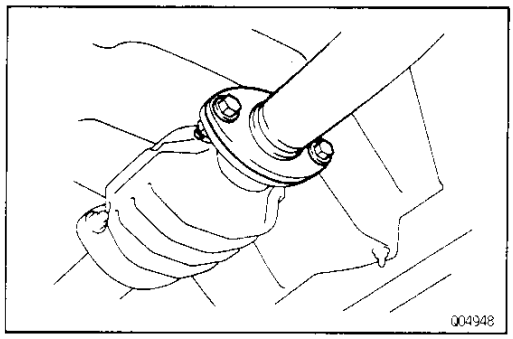

18. REMOVE FRONT EXHAUST PIPE

(a) Remove the 2 nuts and 2 bolts.

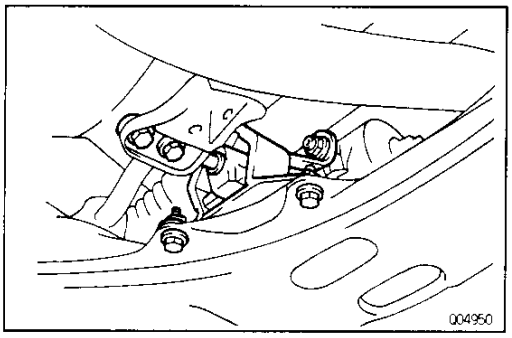

(b) Remove the nut, 4 bolts and exhaust pipe support bracket.

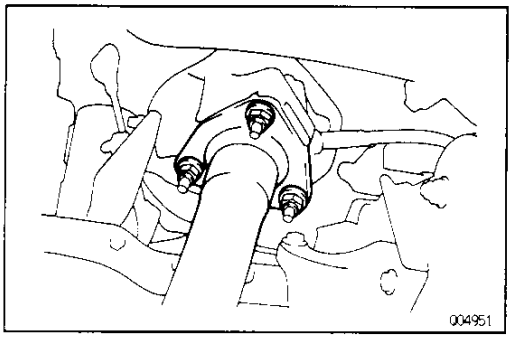

(c) 5S–FE Engine:

Remove the 3 nuts and front exhaust pipe with the gasket.

Downloaded from www.Manualslib.com manuals search engine

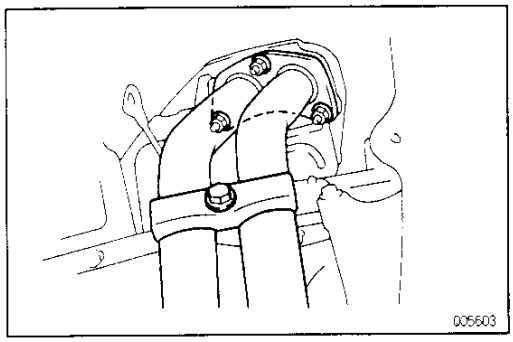

3S–FE Engine:
Remove the 3 nuts and fornt exhaust pipe with the 2 gaskets.

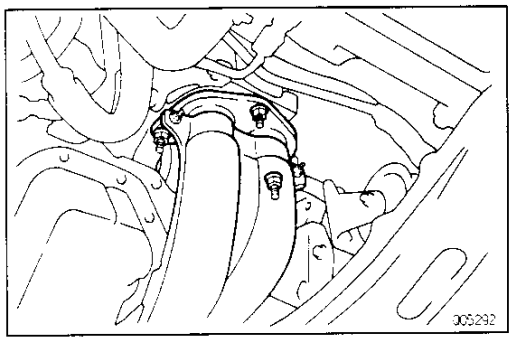

3S–GE Engine:
Remove the 3 nuts and front exhaust pipe with the 2 gaskets.

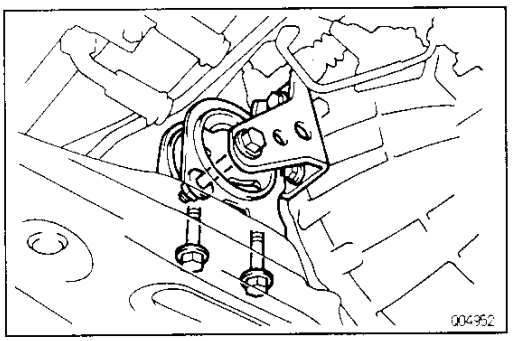

19. REMOVE ENGINE FRONT MOUNTING

(a) Remove the hole plug.
(b) Remove the nut and bolt.
(c) Remove the 4 bolts and engine front mounting.

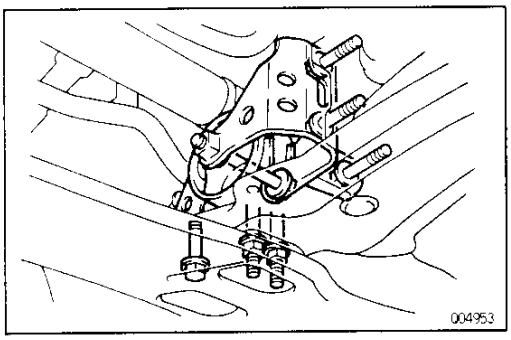

20. REMOVE ENGINE REAR MOUNTING

(a) Remove the 2 hole plugs.
(b) Remove the through bolt.
(c) Remove the 4 bolts, 2 nuts and engine rear mounting.

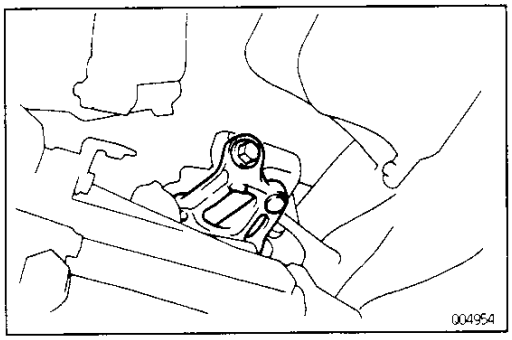

21. REMOVE ENGINE LEFT MOUNTING BOLT

Remove the bolt of engine left mounting lower side.

Downloaded from www.Manualslib.com manuals search engine

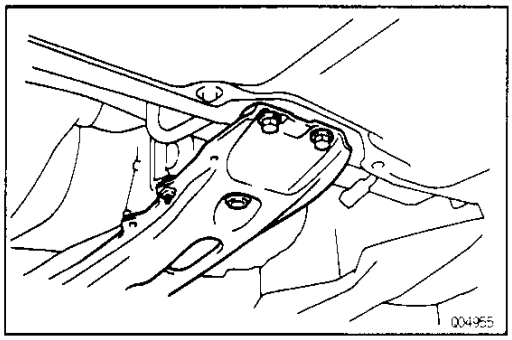

22. REMOVE CENTER MEMBER

(a) Remove the bolt and pipe bracket.

(b) Remove the 2 bolts and center member.

MX

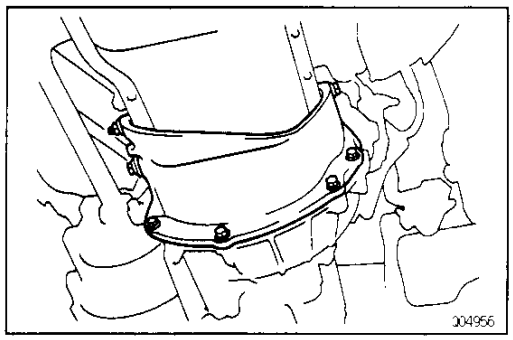

23. REMOVE STIFFENER PLATE

Remove the 6 bolts, nut and stiffener plate.

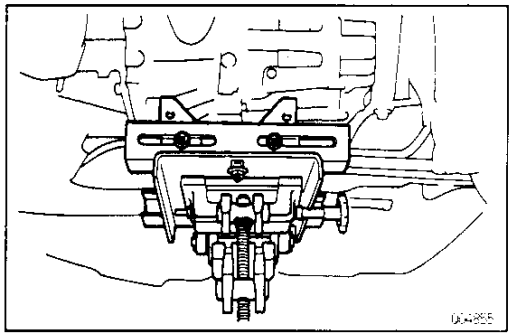

24. JACK UP TRANSAXLE SLIGHTLY

Using a transmission jack, support the transaxle.

25. REMOVE TRANSAXLE

(a) Remove the transaxle mounting bolts.

(b) Lower the engine left side and remove the transaxle from the engine.

Downloaded from www.Manualslib.com manuals search engine

MX087-01

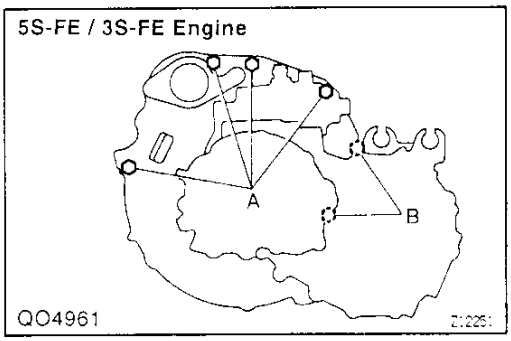

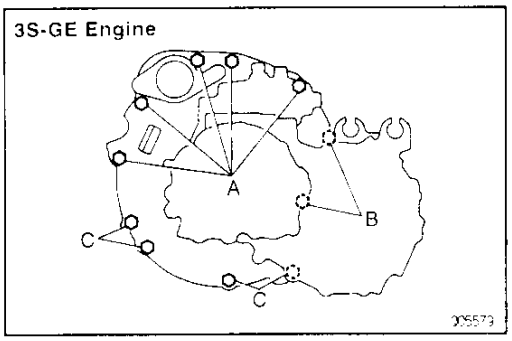

TRANSAXLE INSTALLATION

(See page MX–9)

1. INSTALL TRANSAXLE TO ENGINE

Align the input shaft spline with the clutch disc and install the transaxle to engine.

Bolt A

Torque: 64 N·m (650 kgf·cm, 47 ft·lbf)

Bolt B

Torque: 46 N·m (470 kgf·cm, 34 ft·lbf)

Bolt C

Torque: 21 N·m (210 kgf·cm, 15 ft·lbf)

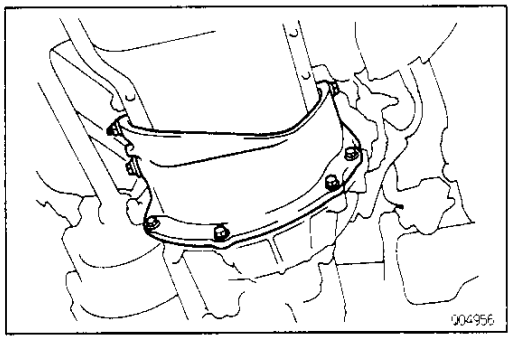

2. INSTALL STIFFENER PLATE

Install the stiffener plate with the 6 bolts and nut. Alternataly tighten the bolts and nut in several passes.

Engine side

Torque: 43 N·m (440 kgf·cm, 32 ft·lbf)

Transaxle side

Torque: 21 N·m (210 kgf·cm, 15 ft·lbf)

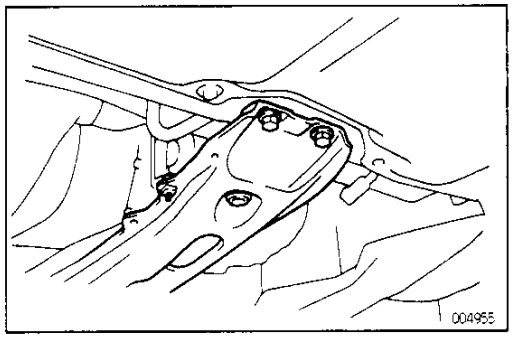

3. INSTALL CENTER MEMBER

(a) Install the center member and torque the 2 bolts.
Torque: 52 N·m (530 kgf·cm, 38 ft·lbf)

(b) Install the pipe bracket with a bolt.

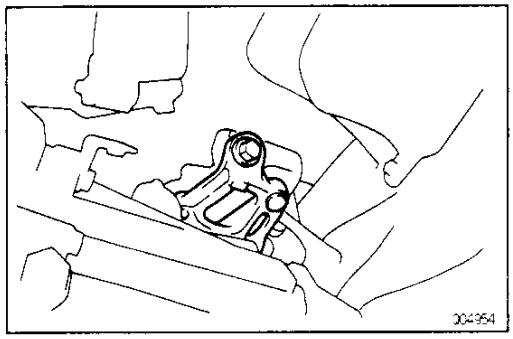

4. INSTALL ENGINE LEFT MOUNTING BOLT

Torque the bolt of engine left mounting lower side.
Torque: 64 N·m (650 kgf·cm, 47 ft·lbf)

Downloaded from www.Manualslib.com manuals search engine

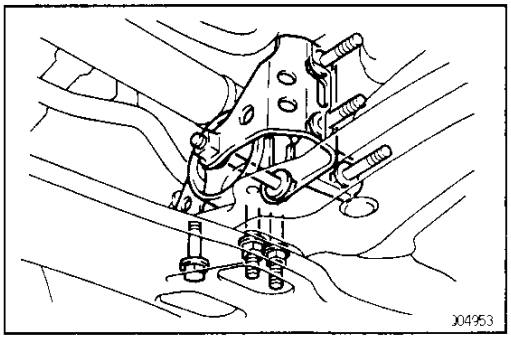

5. INSTALL ENGINE REAR MOUNTING

(a) Install the engine rear mounting, torque the 4 bolts and 2 nuts.

Transaxle side:

Torque: 77 N·m (790 kgf·cm, 57 ft·lbf)

Center member side:

Torque: 64 N·m (650 kgf·cm, 47 ft·lbf)

Through bolt:

Torque: 87 N·m (890 kgf·cm, 64 ft·lbf)

(b) Install the 2 hole plugs.

MX

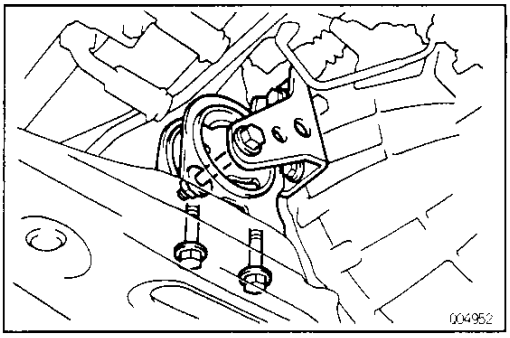

6. INSTALL ENGINE FRONT MOUNTING

(a) Install the engine front mounting and torque the 4 bolts.

Transaxle side:

Torque: 77 N·m (790 kgf·cm, 57 ft·lbf)

Center member side:

Torque: 64 N·m (650 kgf·cm, 47 ft·lbf)

Through bolt:

Torque: 87 N·m (890 kgf·cm, 64 ft·lbf)

(b) Install the hole plug.

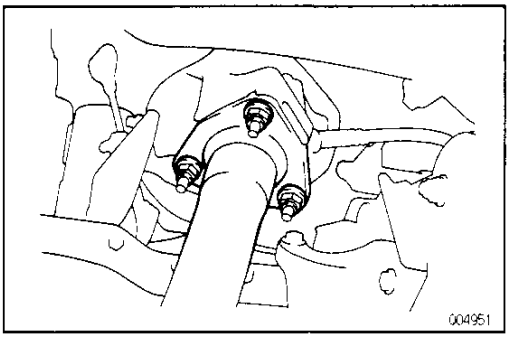

7. INSTALL FRONT EXHAUST PIPE

5S–FE Engine:

(a) Install the front exhaust pipe with a new gasket and torque the 3 nuts.

Torque: 62 N·m (630 kgf·cm, 46 ft·lbf)

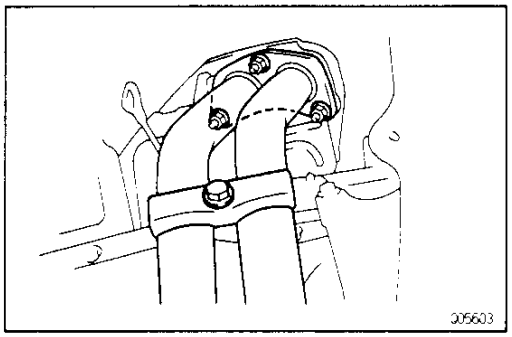

3S–FE Engine:

Install the front exhaust pipe with 2 new gaskets and torque the 3 nuts.

Torque: 62 N·m (630 kgf·cm, 46 ft·lbf)

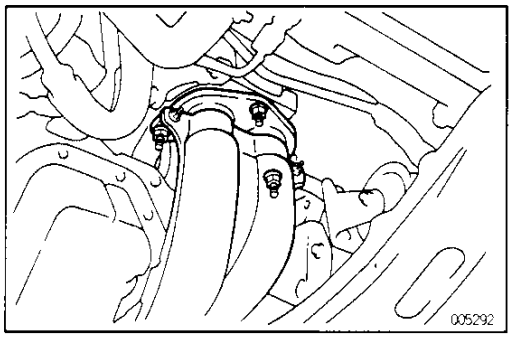

3S–GE Engine:

Install the front exhaust pipe with 2 new gaskets and torque the 3 nuts.

Torque: 62 N·m (630 kgf·cm, 46 ft·lbf)

Downloaded from www.Manualslib.com manuals search engine

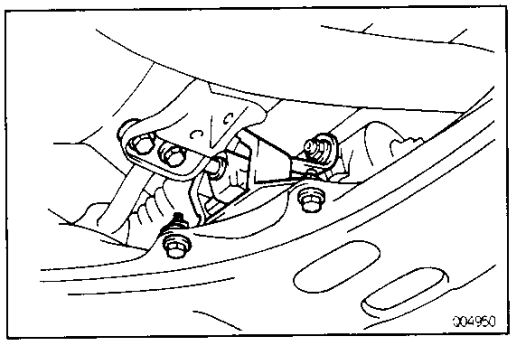

(b) Install the exhaust pipe support bracket, torque the nut and 4 bolts.
Torque: 19 N·m (195 kgf·cm, 14 ft·lbf)

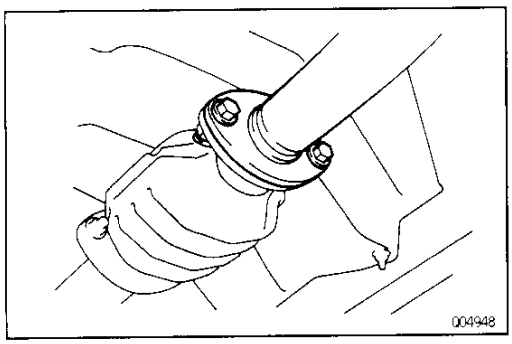

(c) Install a new gasket, torque the 2 bolts and 2 nuts.
Torque: 43 N·m (440 kgf·cm, 32 ft·lbf)

MX

8. **INSTALL LH AND RH DRIVE SHAFTS**
(See page SA–70)
9. **FILL TRANSAXLE WITH GEAR OIL**
Oil grade:
API GL–3, GL–4 or ATF DEXRON® II
Viscosity:
SAE 75W–90
Above –18°C (0°F) SAE 90
Below –18°C (0°F) SAE 75W
Capacity:
2.6 liters (2.7 US qts, 2.3 Imp.qts)
10. **INSTALL UNDER COVERS**
11. **INSTALL FRONT WHEEL AND LOWER VEHICLE**
12. **REMOVE ENGINE SUPPORT FIXTURE**

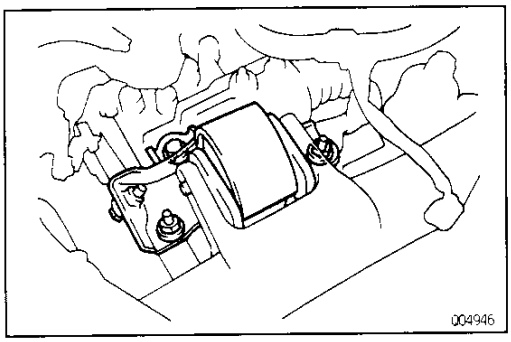

13. **INSTALL ENGINE LEFT MOUNTING BOLT AND NUTS**
Torque the bolt and 2 nuts of engine left mounting upper side.
Torque: 64 N·m (650 kgf·cm, 47 ft·lbf)

Downloaded from www.Manualslib.com manuals search engine

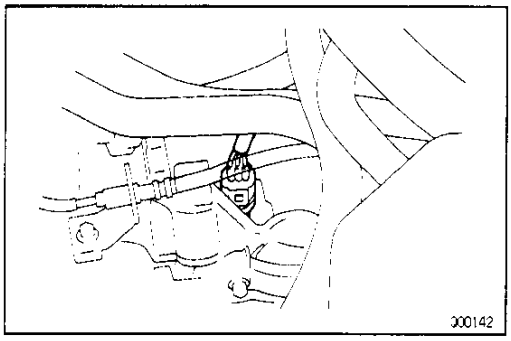

14. CONNECT SPEED SENSOR CONNECTOR

MX

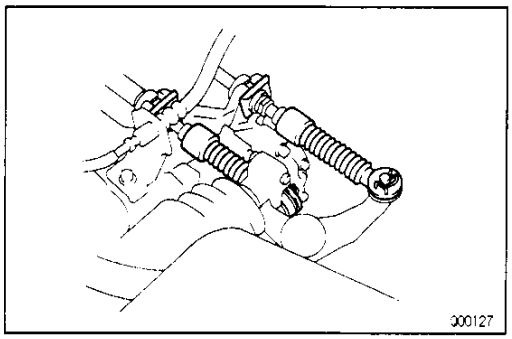

15. CONNECT CONTROL CABLES

(a) Install the 2 clips to the cables.

(b) Connect the 2 cables to the linkage with washers and clips.

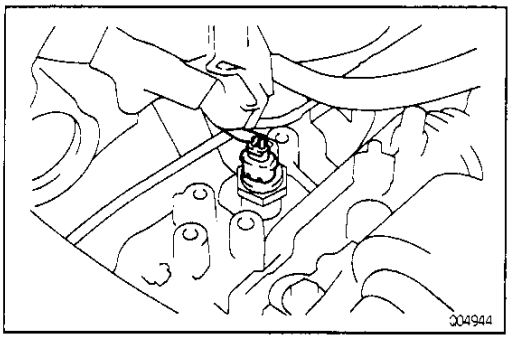

16. CONNECT BACK – UP LIGHT SWITCH CONNECTOR

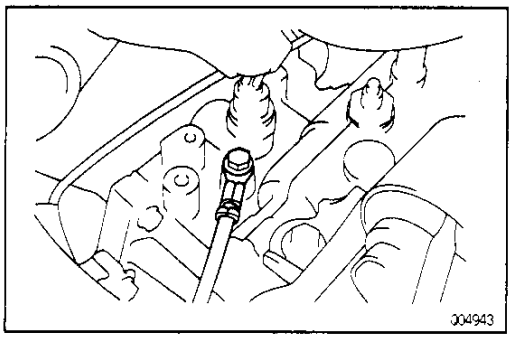

17. INSTALL GROUND CABLE

Torque: 21 N·m (210 kgf·cm, 15 ft·lbf)

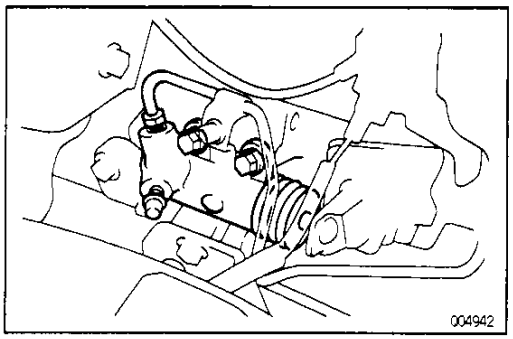

18. INSTALL CLUTCH RELEASE CYLINDER AND TUBE CLAMP

5S–FE/3S–FE Engine:

(a) Install the 2 tube clamps and torque the 2 bolts.

(b) Install the release cylinder and torque the 2 bolts.

Torque: 12 N·m (120 kgf·cm, 9 ft·lbf)

Downloaded from www.Manualslib.com manuals search engine

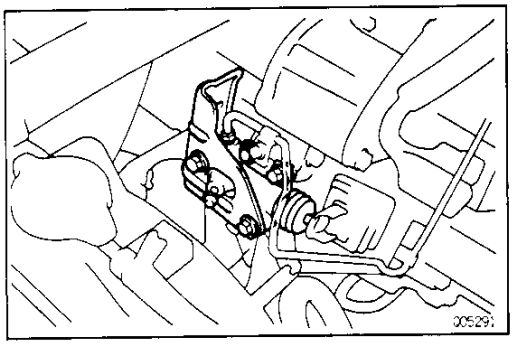

3S–GE Engine:

(a) Install the 2 tube clamps and torque the 2 bolts.

(b) Install the release cylinder and torque the 2 bolts.
Torque: 12 N·m (120 kgf·cm, 9 ft·lbf)

(c) Install the heat insulator and torque the 2 bolts.
Torque: 12 N·m (120 kgf·cm, 9 ft·lbf)

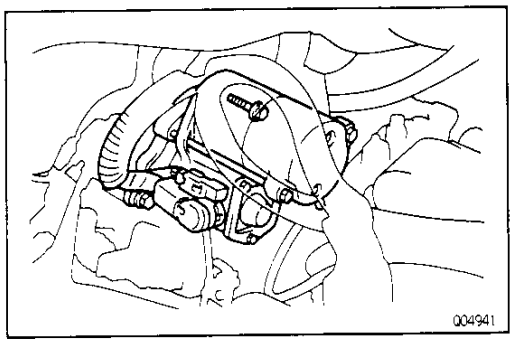

19. INSTALL STARTER

(a) Install the starter and torque the 2 bolts.
Torque: 39 N·m (400 kgf·cm, 29 ft·lbf)

(b) Connect the connector and wire to the starter.

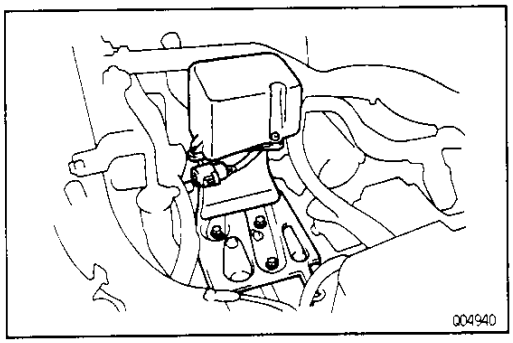

20. w/ CRUISE CONTROL:
INSTALL CRUISE CONTROL ACTUATOR

(a) Install the cruise control actuator with bracket and torque the 3 bolts.

(b) Connect the connector.

21. INSTALL AIR CLEANER CASE ASSEMBLY WITH AIR HOSE AND BATTERY

22. CONNECT NEGATIVE (–) TERMINAL CABLE TO BATTERY

23. INSPECT FRONT WHEEL ALIGNMENT
(See page SA–7)

24. PERFORM ROAD TEST
Check for abnormal noises and smooth shifting.

Downloaded from www.Manualslib.com manuals search engine

COMPONENT PARTS REMOVAL

MX02E-06

COMPONENTS

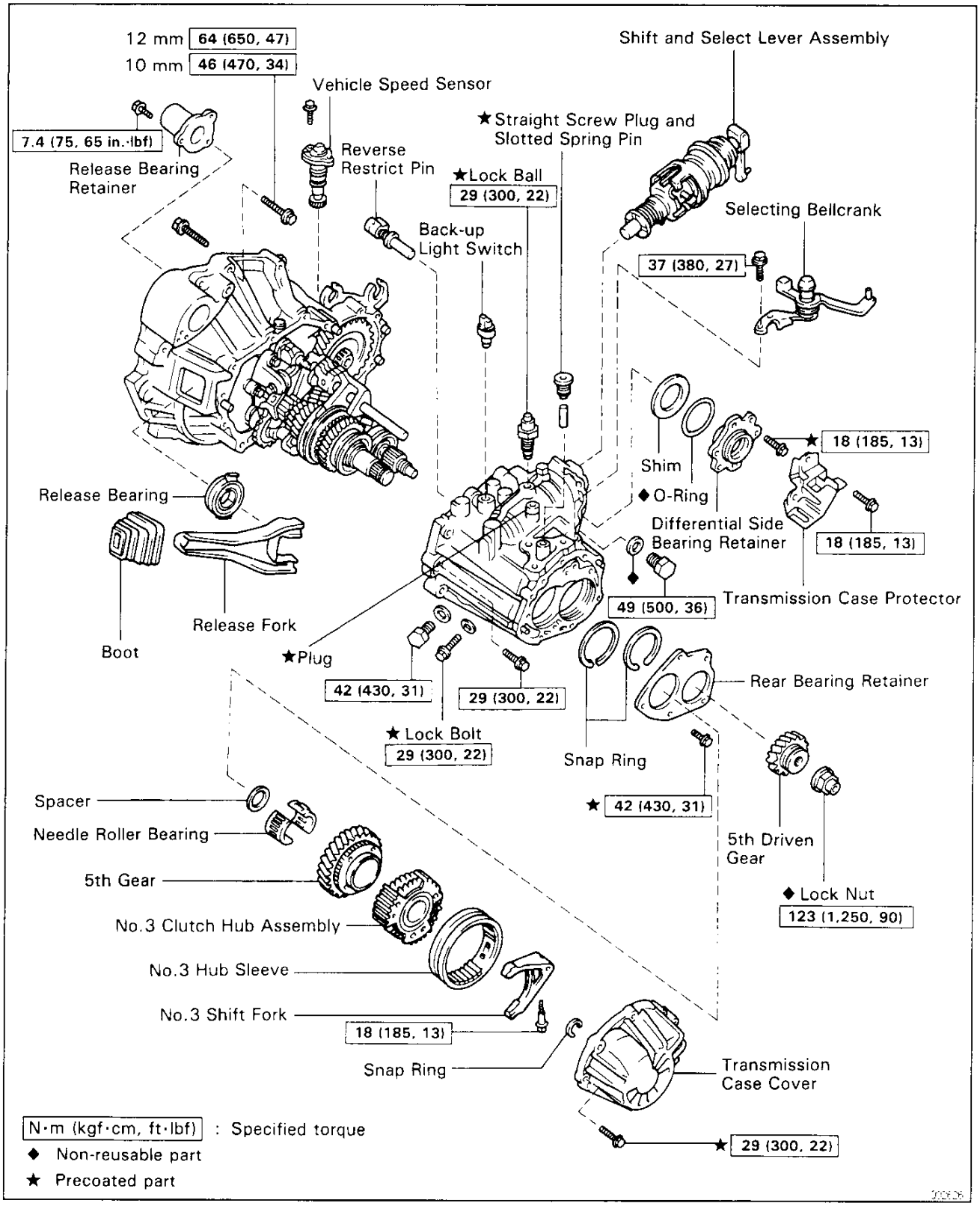

Downloaded from www.Manualslib.com manuals search engine

S54 MANUAL TRANSAXLE – COMPONENT PARTS REMOVAL

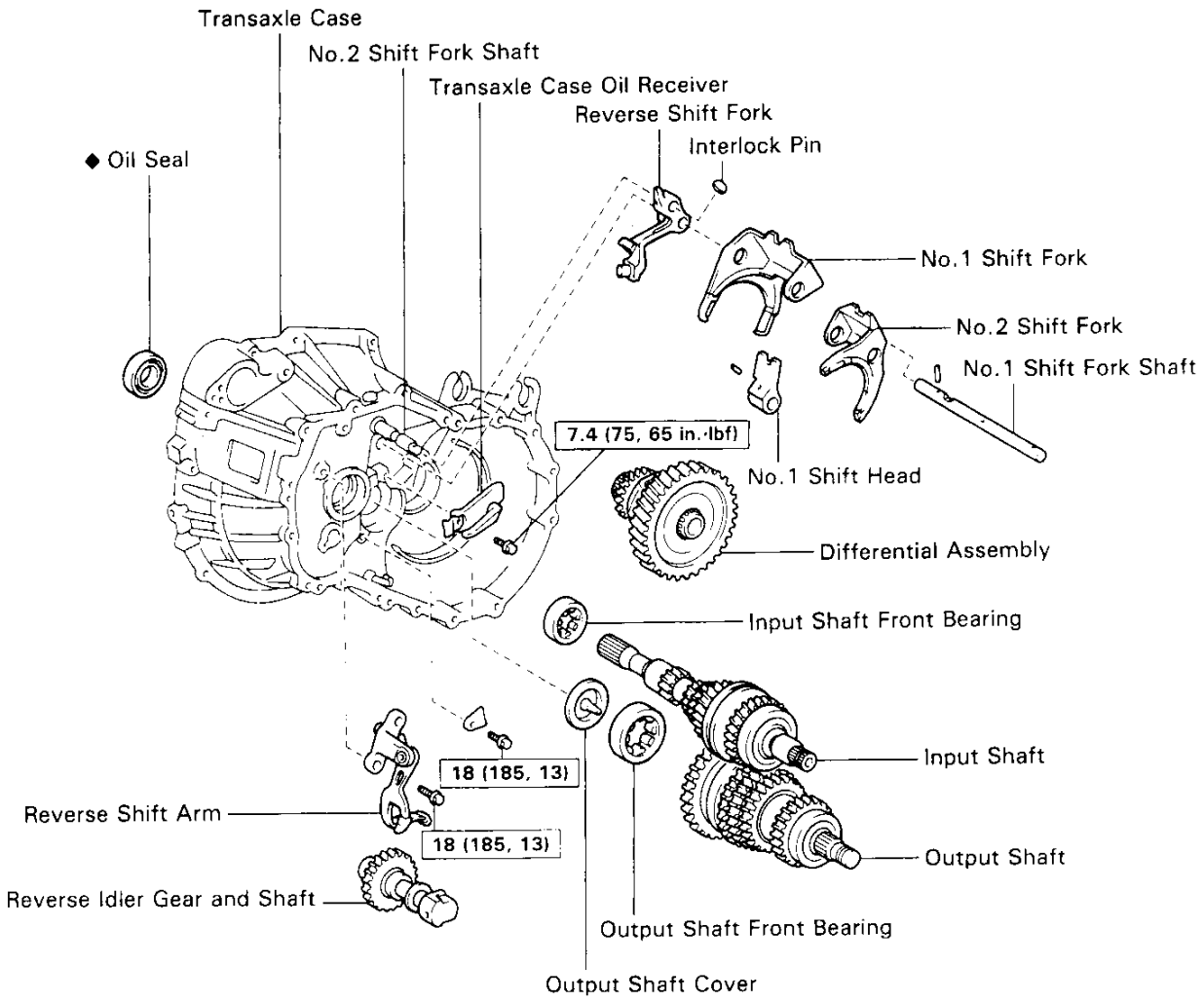

N·m (kgf·cm, ft·lbf) : Specified torque

◆ Non-reusable part

Downloaded from www.Manualslib.com manuals search engine

MX06Y - 05

BASIC SUBASSEMBLY SEPARATION

(See page MX–21 and MX–22)

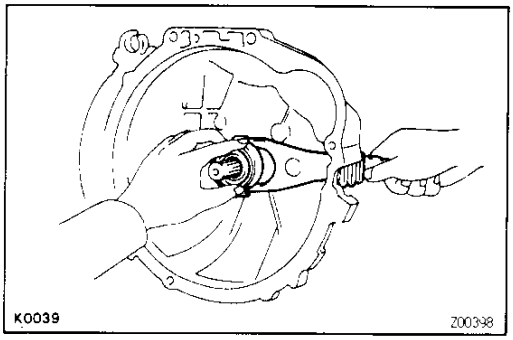

1. **REMOVE RELEASE FORK, BEARING BACK – UP LIGHT SWITCH AND VEHICLE SPEED SENSOR**

MX

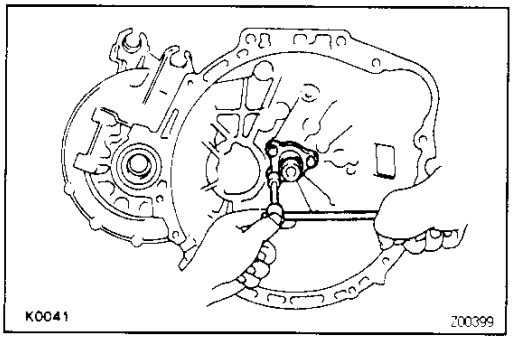

2. **REMOVE RELEASE BEARING RETAINER**

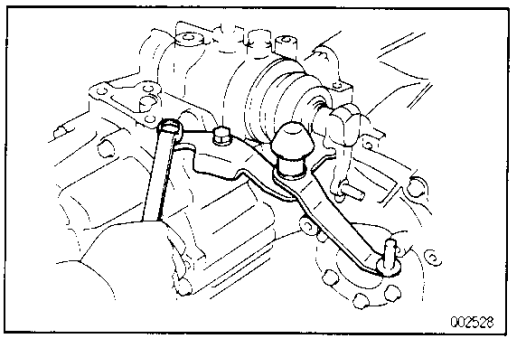

3. **REMOVE ENGINE MOUNT BRACKET AND SELECTING BELLCRANK**
   (a) Remove the 3 bolts and engine mount bracket.
   (b) Remove the 2 bolts and selecting bellcrank.

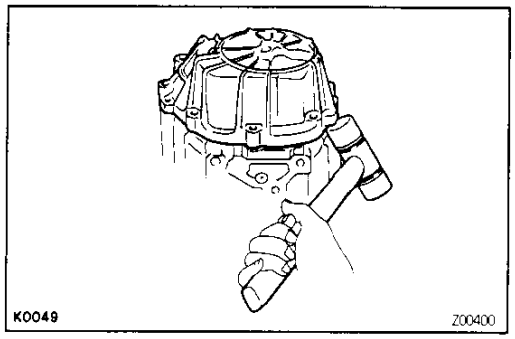

4. **REMOVE TRANSMISSION CASE COVER**
   (a) Remove the 8 bolts.
   (b) Using a plastic hammer, tap off the transmission case cover.

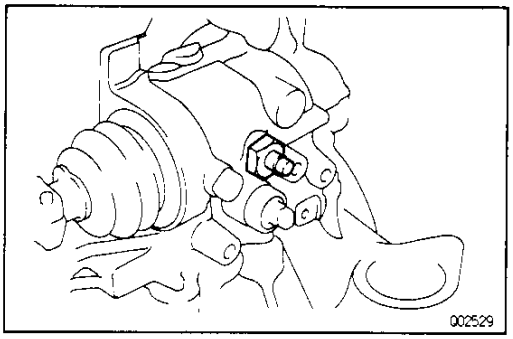

5. **REMOVE LOCK BALL ASSEMBLY AND PLUG**
   (a) Remove the lock ball.

Downloaded from www.Manualslib.com manuals search engine

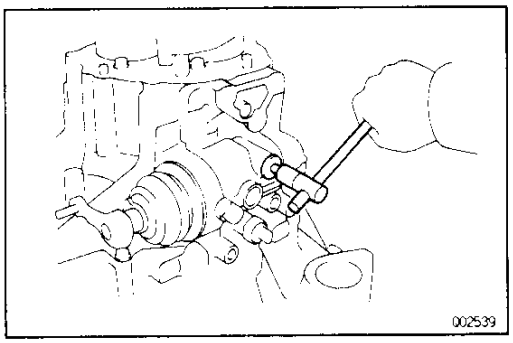

(b) Using a hexagon wrench, remove the plug.

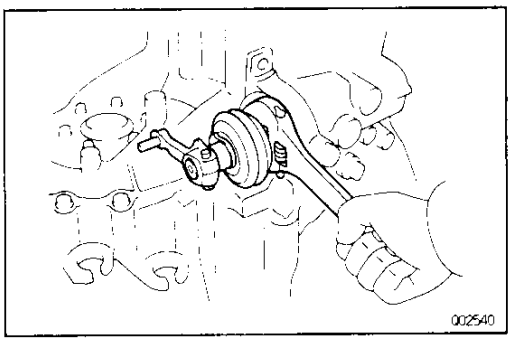

6. REMOVE SHIFT AND SELECT LEVER ASSEMBLY

MX

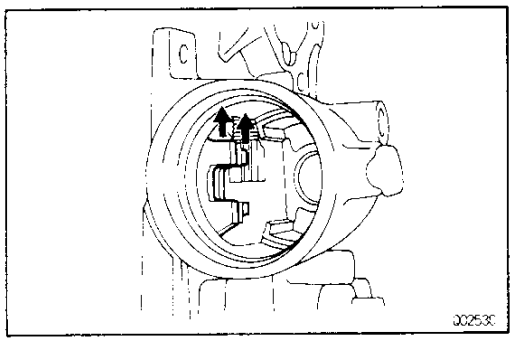

7. REMOVE OUTPUT SHAFT LOCK NUT

(a) Unstake the nut.

(b) Engage the gear double meshing.

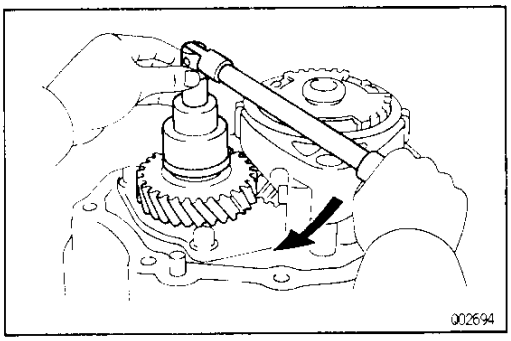

(c) Remove the lock nut clockwise and remove it.
HINT: The lock nut has LH threads.

(d) Disengage the gear double meshing.

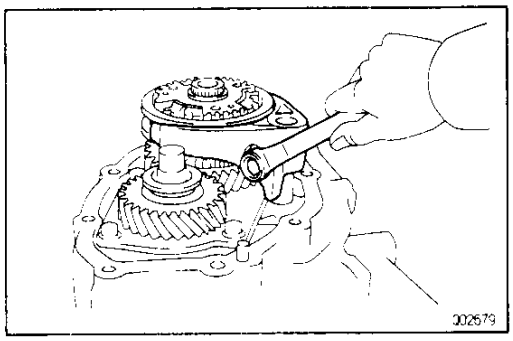

8. REMOVE NO. 3 HUB SLEEVE AND NO. 3 SHIFT FORK

(a) Remove the No.3 shift fork set bolt.

Downloaded from www.Manualslib.com manuals search engine

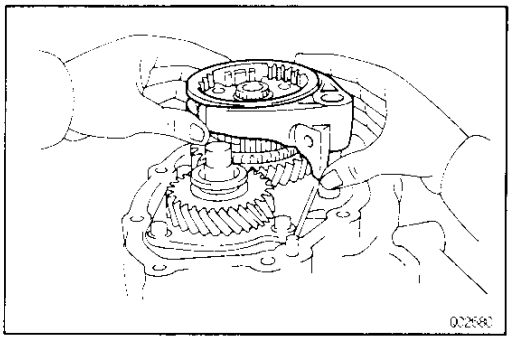

(b) Remove the No.3 hub sleeve and No.3 shift fork.

MX

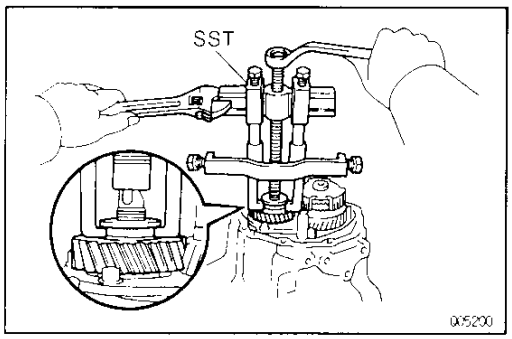

9. REMOVE 5TH DRIVEN GEAR

Using SST, remove the 5th driven gear.
SST 09950–40010

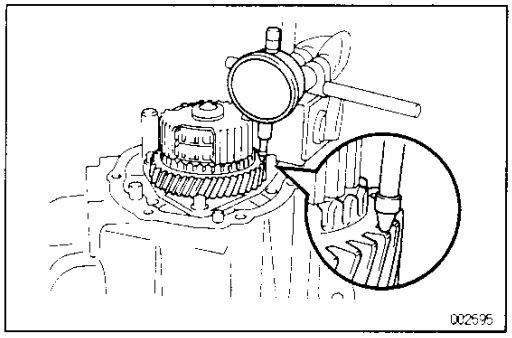

10. MEASURE 5TH GEAR THRUST CLEARANCE

Using a dial indicator, measure the thrust clearance.
Standard clearance:
0.20–0.40 mm (0.0079–0.0157 in.)
Maximum clearance:
0.45 mm (0.0177 in.)

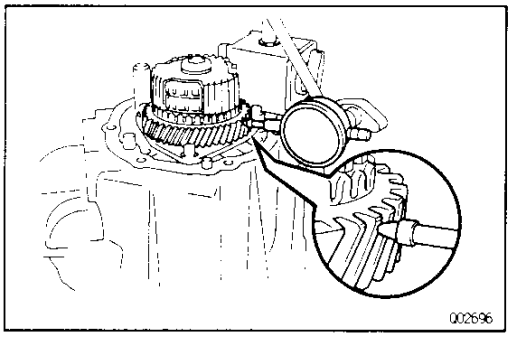

11. MEASURE 5TH GEAR RADIAL CLEARANCE

Using a dial indicator, measure the radial clearance.
Standard clearance:
0.009–0.050 mm (0.0004–0.0020 in.)
Maximum clearance:
0.07 mm (0.0028 in.)
If the clearance exceeds the maximum, replace the gear, needle roller bearing or input shaft.

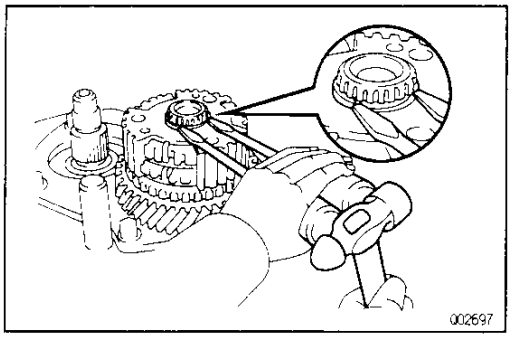

12. REMOVE NO.3 CLUTCH HUB AND 5TH GEAR

(a) Using 2 screwdrivers and a hammer, tap out the snap ring.

Downloaded from www.Manualslib.com manuals search engine

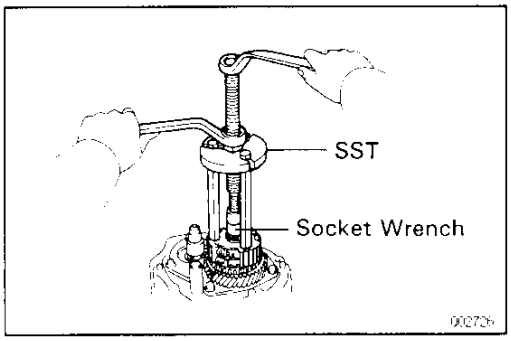

(b) Using SST, remove the No.3 clutch hub with synchronizer ring.
SST 09950–30010
(c) Remove the 5th gear.

13. REMOVE NEEDLE ROLLER BEARING

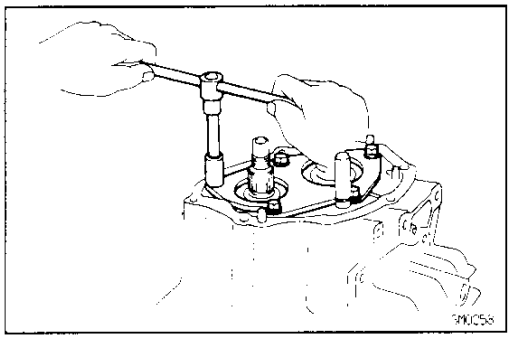

14. REMOVE REAR BEARING RETAINER

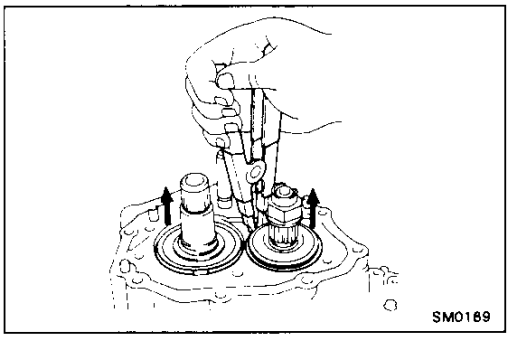

15. REMOVE BEARING SNAP RINGS
Using a snap ring expander, remove the 2 snap rings.
HINT: If it is difficult to remove the snap rings, pull up the shafts.

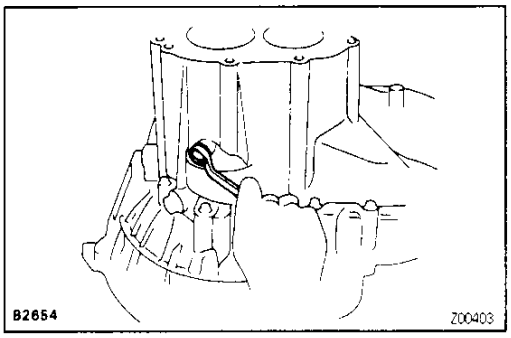

16. REMOVE REVERSE IDLER GEAR SHAFT LOCK BOLT

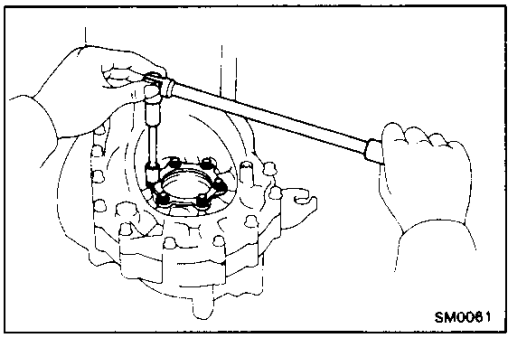

17. REMOVE DIFFERENTIAL SIDE BEARING RETAINER AND SHIM

Downloaded from www.Manualslib.com manuals search engine

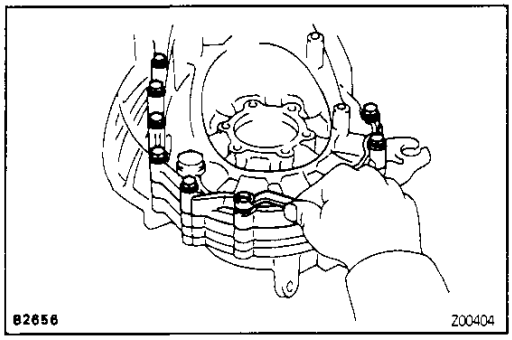

18. REMOVE TRANSMISSION CASE

(a) Remove the 17 bolts.

(b) Using a plastic hammer, tap off the transmission case.

MX

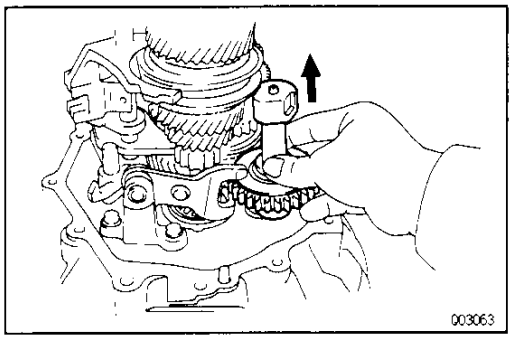

19. REMOVE REVERSE IDLER GEAR AND SHAFT

(a) Pull out the shaft.

(b) Remove the idler gear and thrust washer.

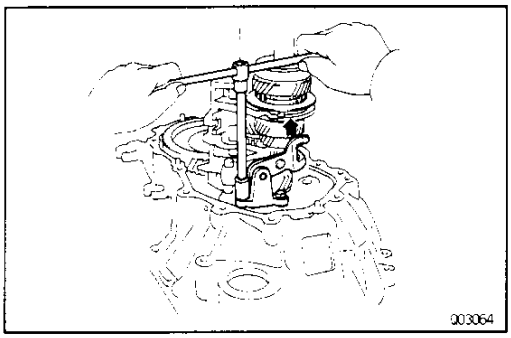

20. REMOVE REVERSE SHIFT ARM

(a) Shift the fork shaft into reverse.

(b) Remove the 2 bolts and pull off the reverse shift arm.

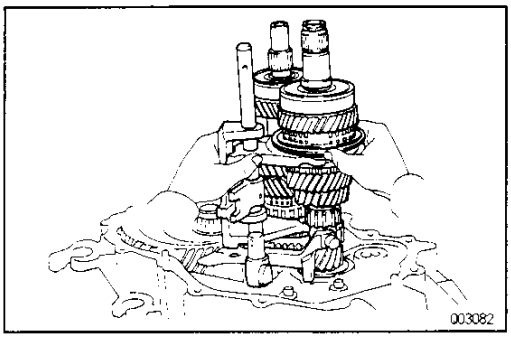

21. REMOVE NO.1 SHIFT FORK SHAFT, NO.1 SHIFT HEAD, NO.1 AND NO.2 SHIFT FORKS, REVERSE SHIFT FORK WITH INTERLOCK PIN, INPUT AND OUTPUT SHAFTS ASSEMBLY

Remove the input shaft assembly and output shaft assembly together with the No.1 fork shaft, shift head and shift forks with the interlock pin from the transaxle case.

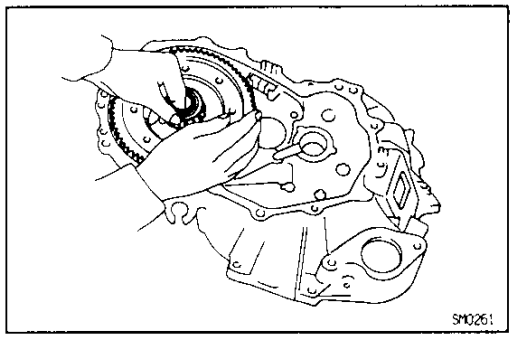

22. REMOVE DIFFERENTIAL CASE ASSEMBLY

Downloaded from www.Manualslib.com manuals search engine

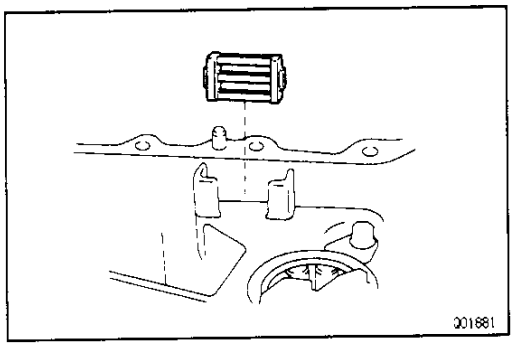

23. REMOVE MAGNET FROM TRANSAXLE CASE

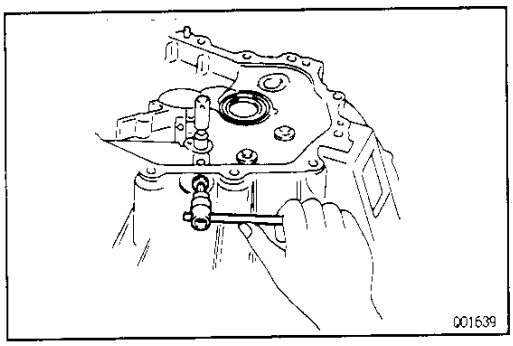

24. REMOVE NO.2 FORK SHAFT

(a) Using a hexagon wrench, remove the straight screw plug.

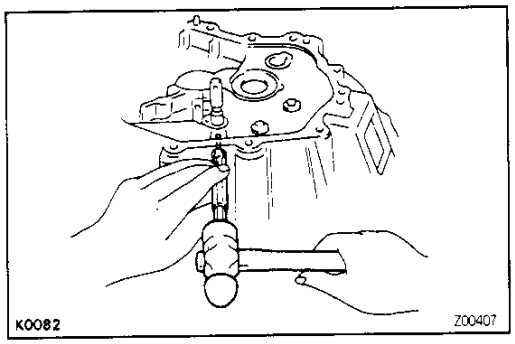

(b) Using a pin punch and hammer, drive out the slotted spring pin.

(c) Pull out the shaft.

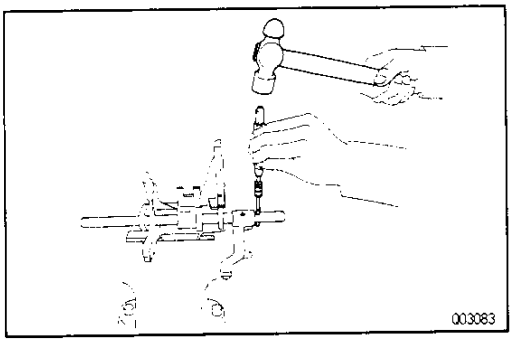

25. SEPARATE NO.1 FORK SHAFT, NO.1 SHIFT HEAD, NO.1, NO.2 SHIFT FORKS AND REVERSE SHIFT FORK

(a) Mount the shift forks to the vise.

(b) Using a pin punch and hammer, drive out the slotted spring pin from the No.1 fork shaft.

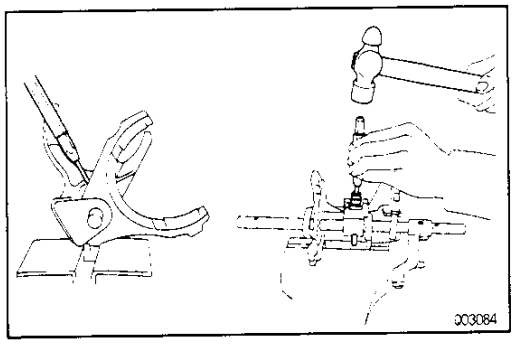

(c) Using a pin punch and hammer, drive out the slotted spring pin from the No.1 fork shaft as shown in the illustration.

Downloaded from www.Manualslib.com manuals search engine

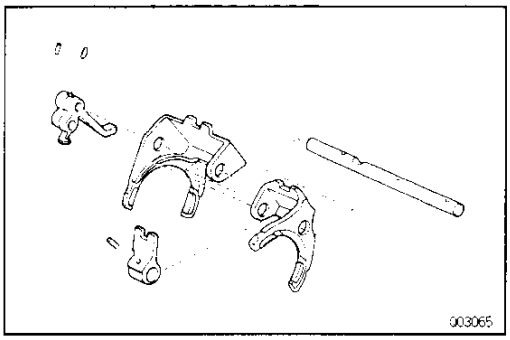

(d) Separate the No.1 shift fork shaft, No.1 shift head, No.1, No.2 shift forks and reverse shift fork.

MX

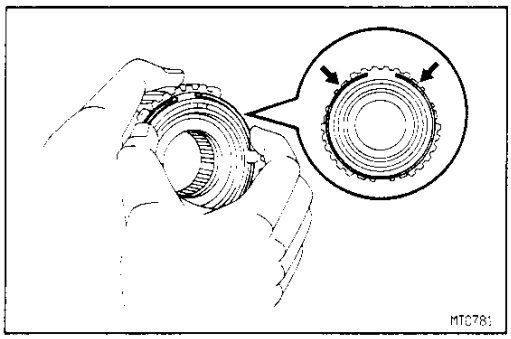

26. REMOVE NO.5 SYNCHRONIZER RING WITH KEY SPRING FROM NO.3 CLUTCH HUB

(a) Remove the No.5 synchronizer ring with key spring from No.3 clutch hub.

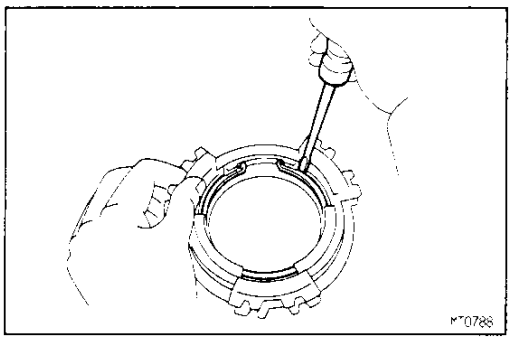

(b) Using a screwdriver, remove the snap ring.
HINT: Wrap vinyl tape on the screwdriver to prevent damaging the synchronizer ring.

(c) Remove the synchronizer rings.

Downloaded from www.Manualslib.com manuals search engine

MX06Z-04

COMPONENT PARTS INSPECTION

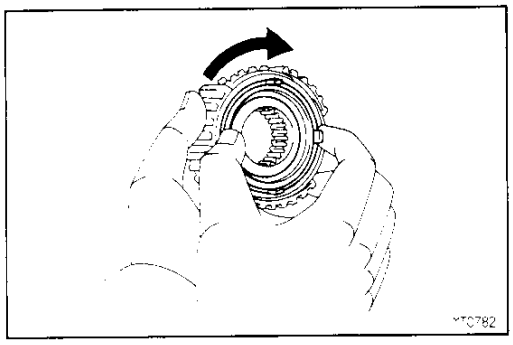

1. INSPECT NO.5 SYNCHRONIZER RINGS

(a) Check for wear or damage.

(b) Check the braking effect of the synchronizer ring.
Turn the middle No.5 synchronizer ring in one direction while pushing it to the outer No.5 synchronizer ring. Check that the ring locks.
If the braking effect is insufficient, replace the synchronizer ring.

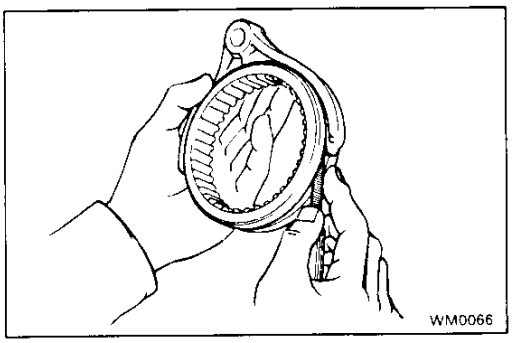

2. INSPECT CLEARANCE OF NO.3 SHIFT FORK AND NO.3 HUB SLEEVE

Using a feeler gauge, measure the clearance between the hub sleeve and shift fork.

Maximum clearance:

1.0 mm (0.039 in.)

If the clearance exceeds the maximum, replace the shift fork or hub sleeve.

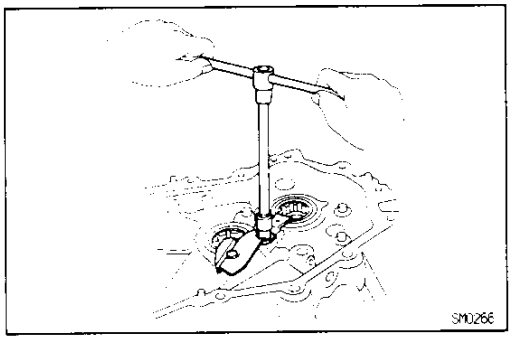

3. IF NECESSARY, REPLACE INPUT SHAFT FRONT BEARING

(a) Remove the bolt and transaxle case receiver.

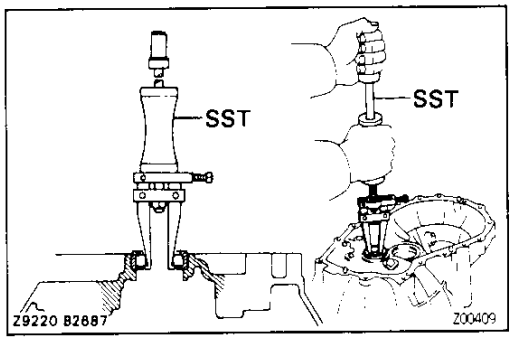

(b) Using SST, pull out the bearing.
SST 09308–00010

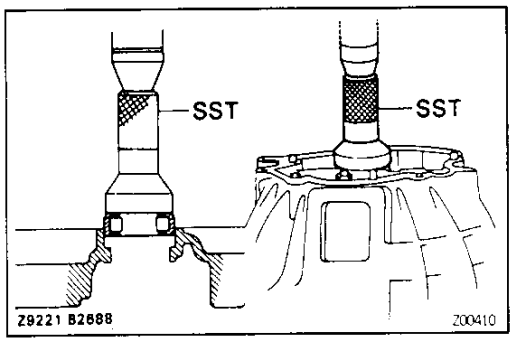

(c) Using SST, press in a new bearing.
SST 09310–35010

Downloaded from www.Manualslib.com manuals search engine

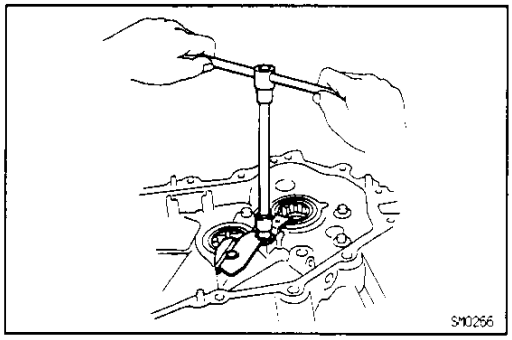

(d) Install the transaxle case receiver and torque the bolt.
Torque: 7.4 N·m (75 kgf·cm, 65 in.·lbf)

MX

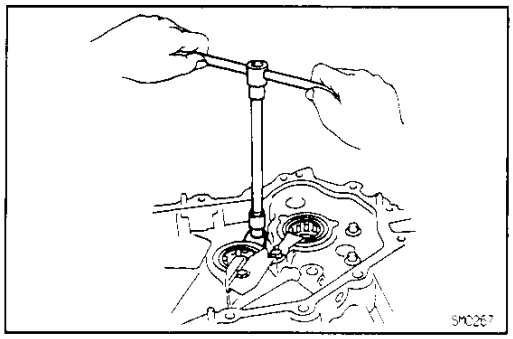

4. IF NECESSARY, REPLACE OUTPUT SHAFT FRONT BEARING

(a) Remove the bolt and bearing lock plate.

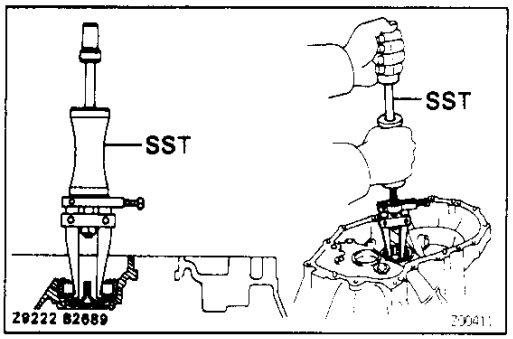

(b) Using SST, pull out the bearing.
SST 09308–00010

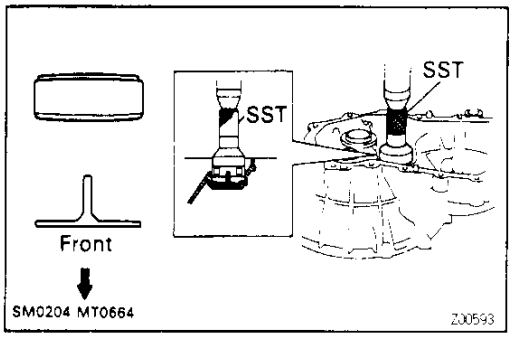

(c) Using SST, press in a new bearing.
SST 09310–35010

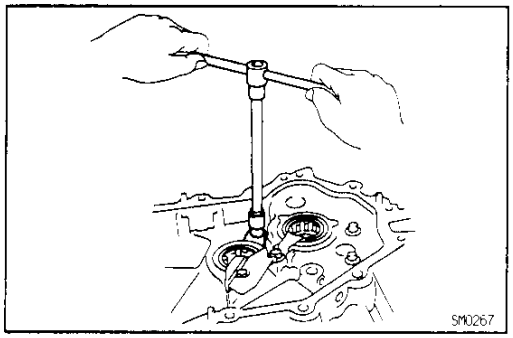

(d) Install the bearing lock plate and torque the bolt.
Torque: 18 N·m (185 kgf·cm, 13 ft·lbf)

Downloaded from www.Manualslib.com manuals search engine

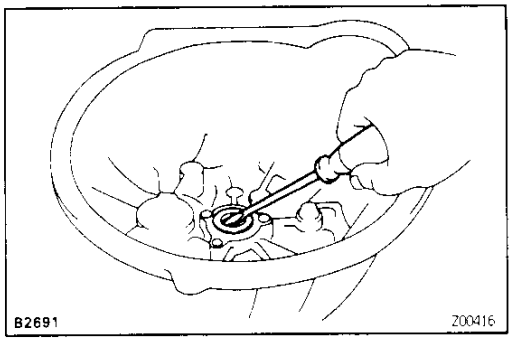

5. IF NECESSARY, REPLACE INPUT SHAFT FRONT OIL SEAL

(a) Using a screwdriver, pry out the oil seal.

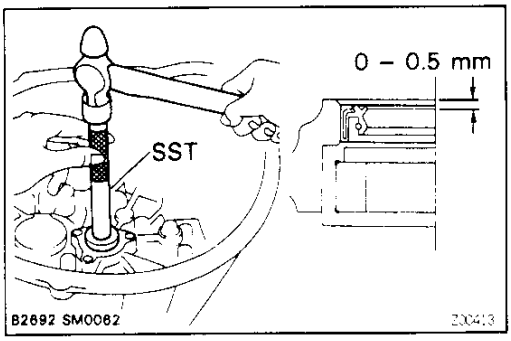

(b) Using SST, drive in a new oil seal.
SST 09608–20012 (09608–00080, 09608–03020)
Drive in depth:
0–0.5 mm (0–0.020 in.)

(c) Coat the lip of the oil seal with MP grease.

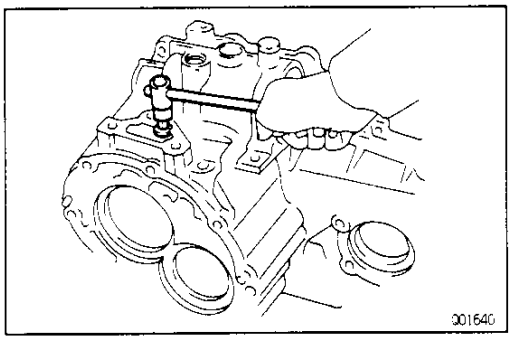

6. IF NECESSARY, REPLACE REVERSE RESTRICT PIN

(a) Using a hexagon wrench, remove the straight screw plug.

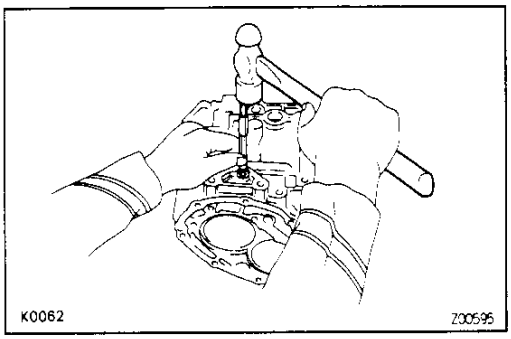

(b) Using a pin punch and hammer, drive out the slotted spring pin.

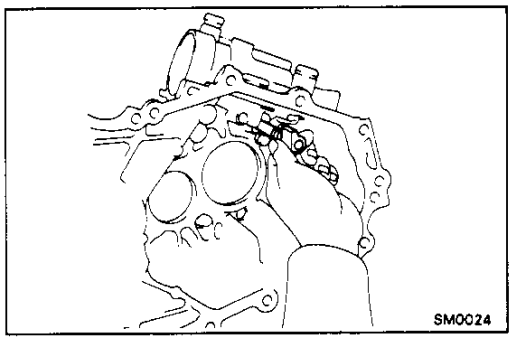

(c) Replace the reverse restrict pin.

Downloaded from www.Manualslib.com manuals search engine

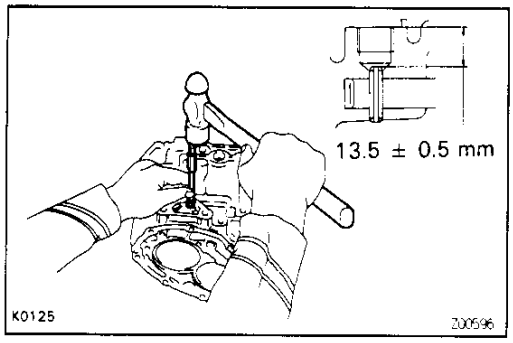

(d) Using a pin punch and hammer, drive in the slotted spring pin.
Drive in depth:
13.5 ± 0.5 mm (0.531 ± 0.020 in.)

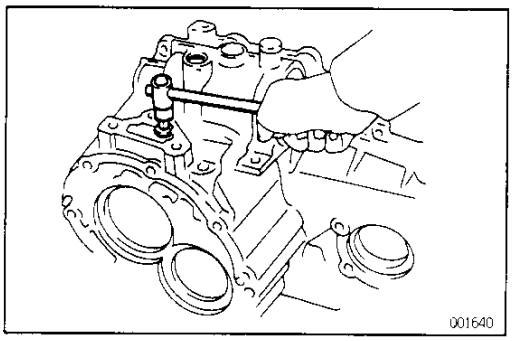

(e) Apply sealant to the plug threads.
Sealant:
Part No.08833–00080, THREE BOND 1344, LOCTITE 242 or equivalent

(f) Using a hexagon wrench, install and torque the straight screw plug.
Torque: 13 N·m (130 kgf·cm, 9 ft·lbf)

Downloaded from www.Manualslib.com manuals search engine

INPUT SHAFT
COMPONENTS

MX02H-02

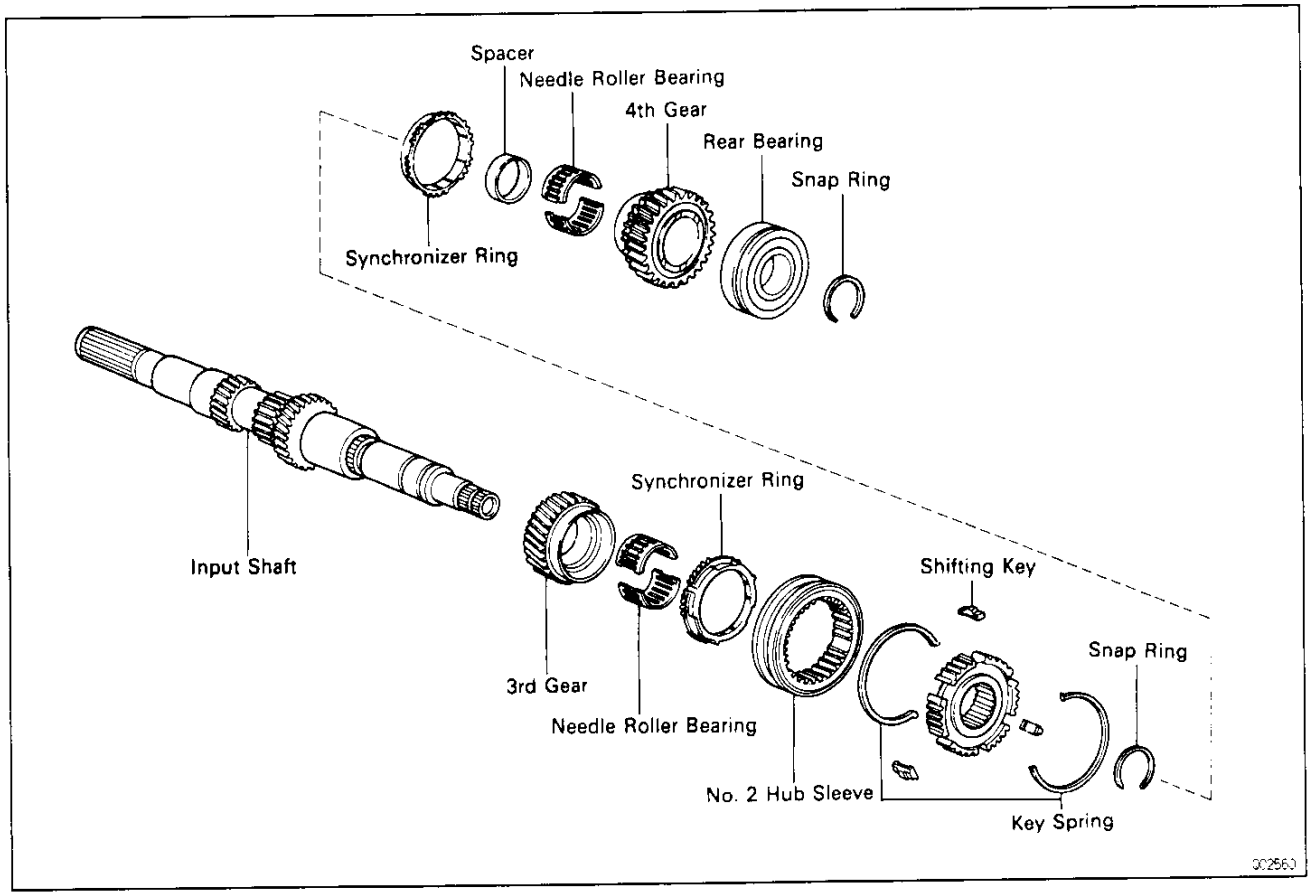

MX034-08

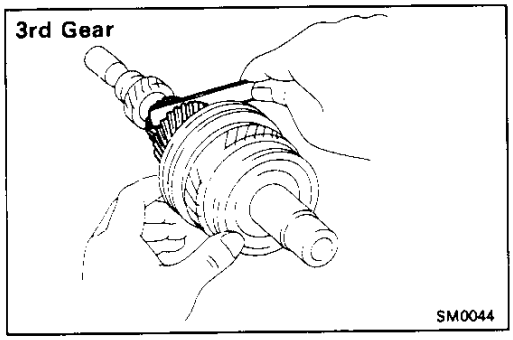

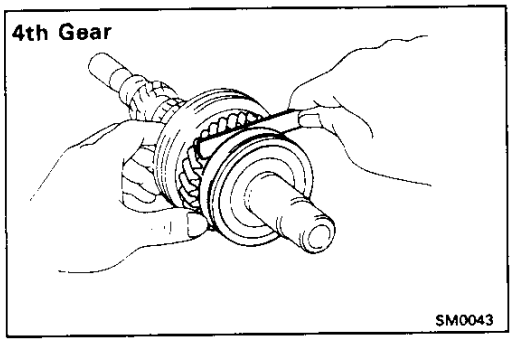

INPUT SHAFT DISASSEMBLY

1. **INSPECT 3RD AND 4TH GEAR THRUST CLEARANCE**

   Using a feeler gauge, measure the clearance.

   Standard clearance:

   3rd gear

   0.10 – 0.25 mm (0.0039 – 0.0098 in.)

   4th gear

   0.20 – 0.45 mm (0.0079 – 0.0177 in.)

   Maximum clearance:

   3rd gear

   0.30 mm (0.0118 in.)

   4th gear

   0.50 mm (0.0197 in.)

Downloaded from www.Manualslib.com manuals search engine

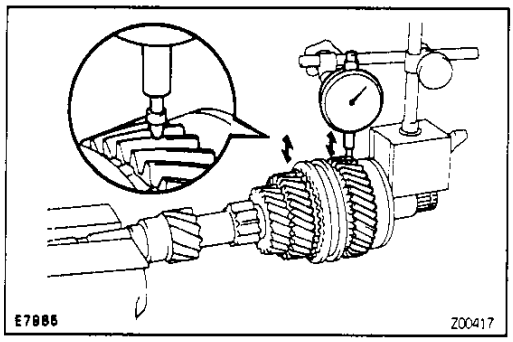

2. INSPECT 3 RD AND 4 TH GEAR RADIAL CLEARANCE

Using dial indicator, measure the radial clearance between the gear and shaft.

Standard clearance:

0.009 – 0.053 mm (0.0004 – 0.0021 in.)

Maximum clearance:

0.070 mm (0.0028 in.)

If the clearance exceeds the maximum, replace the gear, needle roller bearing or shaft.

MX

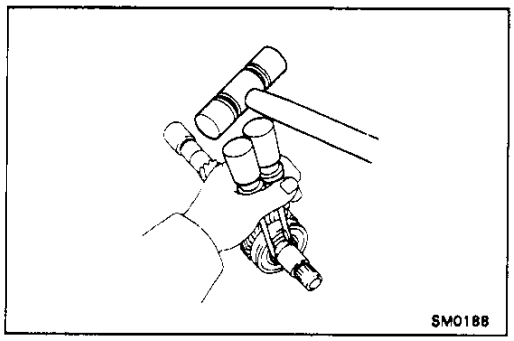

3. REMOVE SNAP RING

Using 2 screwdrivers and a hammer, tap out the snap ring.

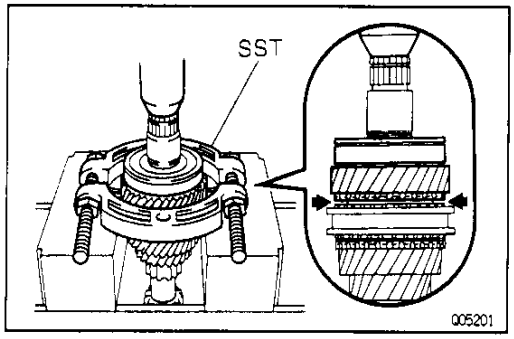

4. REMOVE REAR BEARING, 4 TH GEAR, NEEDLE ROLLER BEARINGS, SPACER AND SYNCHRONIZER RING FROM INPUT SHAFT

(a) Using SST and a press, remove the 4th gear and rear bearing.
SST 09950 – 00020

(b) Remove the needle roller bearings, spacer and synchronizer ring.

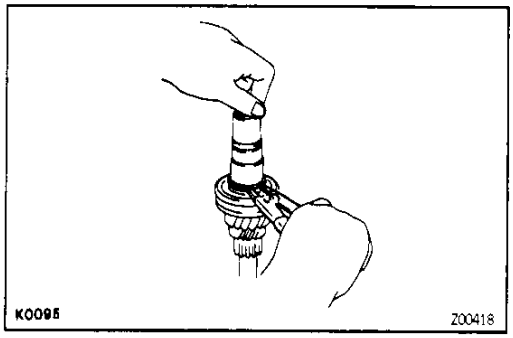

5. REMOVE SNAP RING

Using a snap ring expander, remove the snap ring.

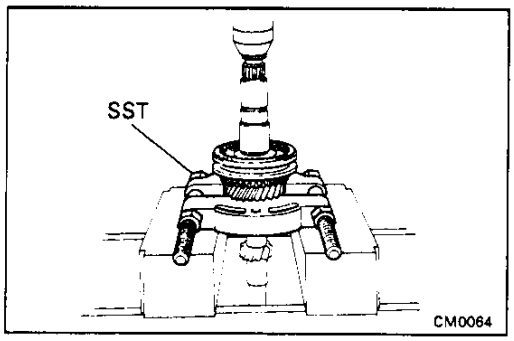

6. REMOVE NO. 2 HUB SLEEVE ASSEMBLY, 3 RD GEAR SYNCHRONIZER RING AND NEEDLE ROLLER BEARINGS

Using SST and a press, remove the No.2 hub sleeve, 3rd gear, synchronizer ring and needle roller bearings.
SST 09950 – 00020

NOTICE: Be careful not to mistake the 3rd gear synchronizer ring for the 4th gear synchronizer ring.

Downloaded from www.Manualslib.com manuals search engine

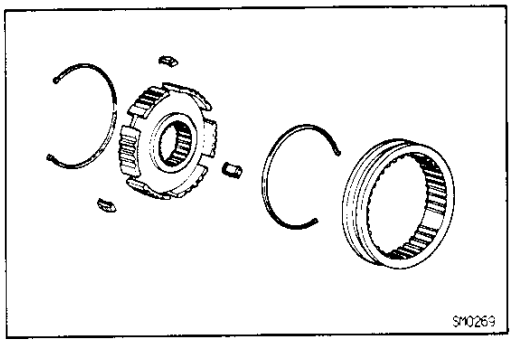

7. REMOVE NO.2 HUB SLEEVE, SHIFTING KEYS AND SPRINGS FROM NO.2 CLUTCH HUB

Using a screwdriver, remove the 3 shifting keys and 2 springs from the No.2 clutch hub.

INPUT SHAFT COMPONENTS INSPECTION

MX02K-06

MX

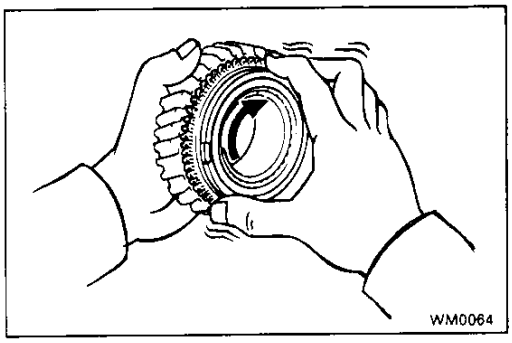

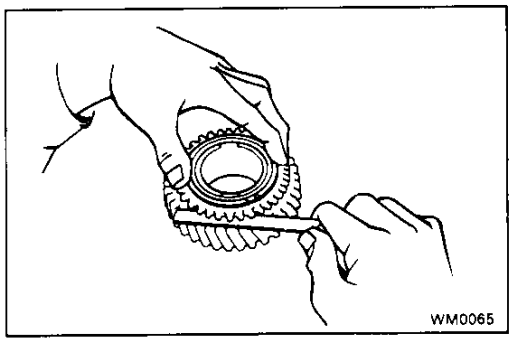

1. INSPECT SYNCHRONIZER RINGS

(a) Check for wear or damage.

(b) Check the braking effect of the synchronizer ring. Turn the synchronizer ring in one direction while pushing it to the gear cone. Check that the ring locks.
If the braking effect is insufficient, apply a small amount of fine lapping compound between the synchronizer ring and gear cone.
Lightly rub the synchronizer ring and gear cone together.
NOTICE: Ensure the fine lapping compound is completely washed off after rubbing.

(c) Check again the braking effect of the synchronizer ring.

(d) Using a feeler gauge, measure the clearance between the synchronizer ring back and gear spline end.
Minimum clearance:
0.6 mm (0.024 in.)
HINT:
- When replacing either a synchronizer ring or gear, apply a small amount of fine lapping compound between the synchronizer ring and gear cone.
  Lightly rub the synchronizer ring and gear cone together.
- When replacing both the synchronizer ring and gear, there is no need to apply any compound or to rub them together.

NOTICE: Ensure the fine lapping compound is completely washed off after rubbing.

Downloaded from www.Manualslib.com manuals search engine

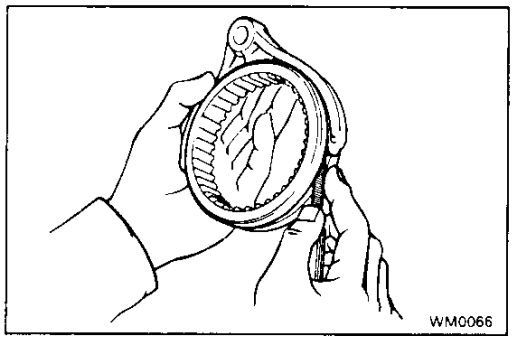

2. INSPECT CLEARANCE OF NO.2 SHIFT FORK AND HUB SLEEVE

Using a feeler gauge, measure the clearance between the hub sleeve and shift fork.

Maximum clearance:

1.0 mm (0.039 in.)

If the clearance exceeds the maximum, replace shift fork or hub sleeve.

MX

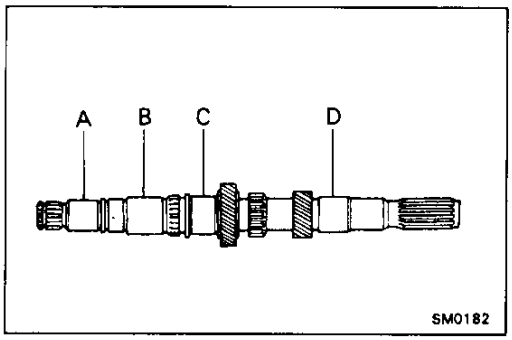

3. INSPECT INPUT SHAFT

(a) Check the input shaft for wear or damage.

(b) Using a micrometer, measure the outer diameter of the input shaft journal surface.

Minimum outer diameter:

Part A

26.970 mm (1.0618 in.)

Part B

32.470 mm (1.2783 in.)

Part C

33.090 mm (1.3028 in.)

Part D

29.970 mm (1.1799 in.)

If the outer diameter is less than the minimum, replace the input shaft.

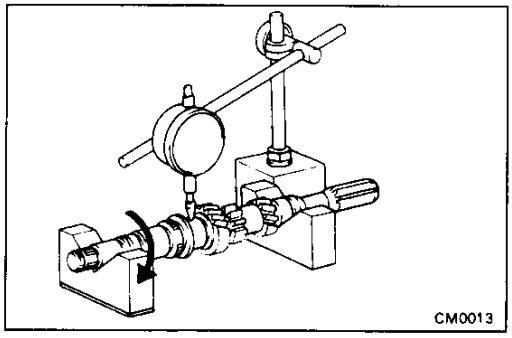

(c) Using a dial indicator, check the shaft runout.

Maximum runout:

0.05 mm (0.0020 in.)

If the outer diameter exceeds the maximum, replace the input shaft.

Downloaded from www.Manualslib.com manuals search engine

MX070-04

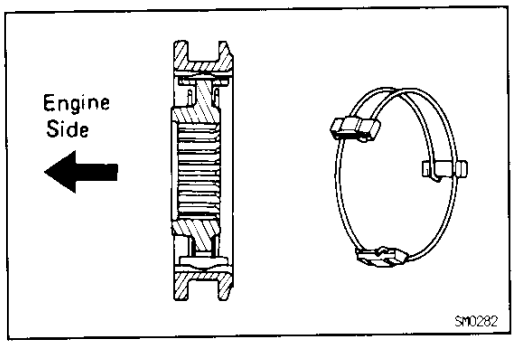

INPUT SHAFT ASSEMBLY

(See page MX–33)

HINT: Coat all of the sliding and rotating surface with gear oil before assembly.

1. INSTALL NO.2 CLUTCH HUB INTO HUB SLEEVE

(a) Install the clutch hub and shifting keys to the hub sleeve.

(b) Install the shifting key springs under the shifting keys.
NOTICE: Install the key springs positioned so that their end gaps are not line.

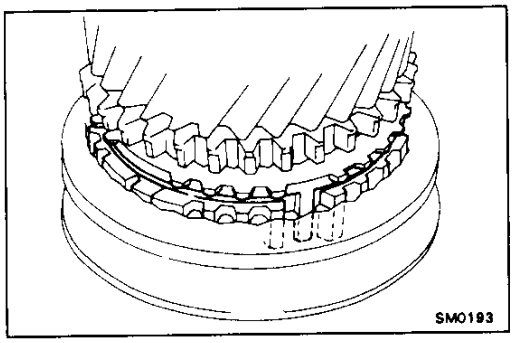

2. INSTALL 3RD GEAR, NEEDLE ROLLER BEARINGS, SYNCHRONIZER RING AND NO.2 HUB SLEEVE ASSEMBLY TO INPUT SHAFT

(a) Apply gear oil to the needle roller bearings.

(b) Place the synchronizer ring (for 3rd gear) on the gear and align the ring slots with the shifting keys.
NOTICE: Do not install the synchronizer ring for 4th gear.

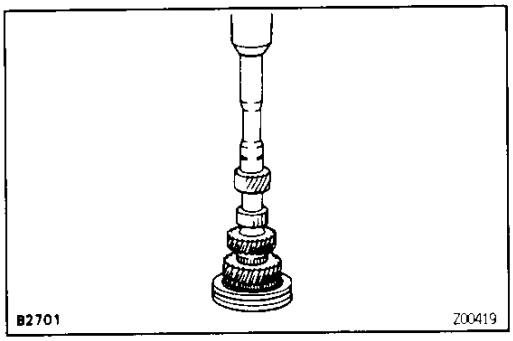

(c) Using a press, install the 3rd gear and No.2 hub sleeve.

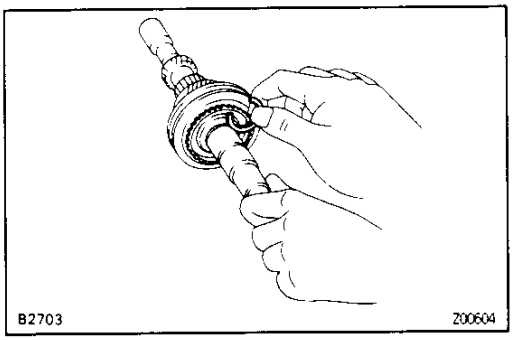

3. INSTALL SNAP RING

(a) Select a snap ring that will allow minimum axial play.

Mark	Thickness mm (in.)
1	1.95–2.00 (0.0768–0.0787)
2	2.00–2.05 (0.0787–0.0807)
3	2.05–2.10 (0.0807–0.0827)
4	2.10–2.15 (0.0827–0.0846)
5	2.15–2.20 (0.0846–0.0866)
6	2.20–2.25 (0.0866–0.0886)

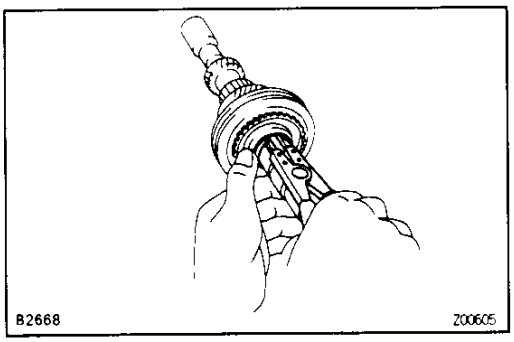

(b) Using a snap ring expander, install the snap ring.

MX

Downloaded from www.Manualslib.com manuals search engine

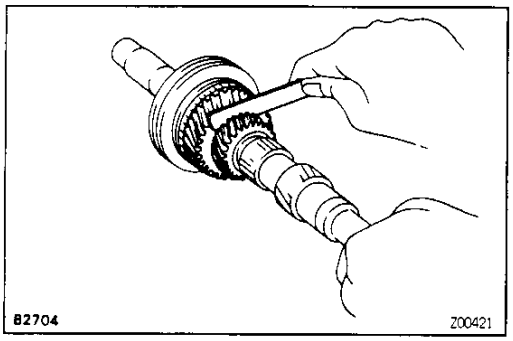

4. INSPECT 3RD GEAR THRUST CLEARANCE

Using a feeler gauge, measure the 3rd gear thrust clearance.

Standard clearance:

0.10 – 0.25 mm (0.0039 – 0.0098 in.)

MX

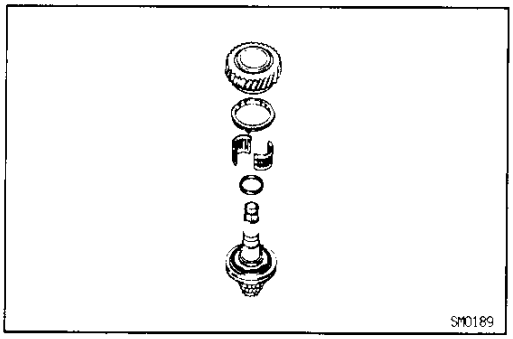

5. INSTALL SYNCHRONIZER RING, NEEDLE ROLLER BEARINGS, SPACER, 4TH GEAR AND REAR BALL BEARING

(a) Apply gear oil to the needle roller bearings.

(b) Install the spacer and needle roller bearings.

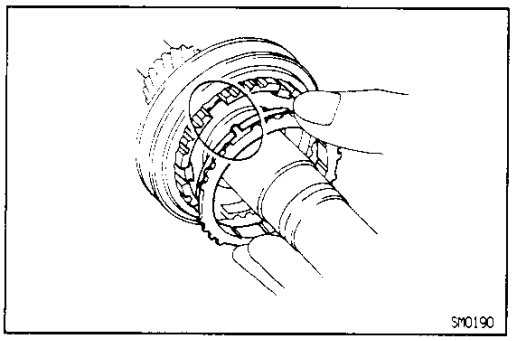

(c) Place the synchronizer ring on the gear.
HINT: Align the ring slots with the shifting keys, and the ring projections with the hub slots.

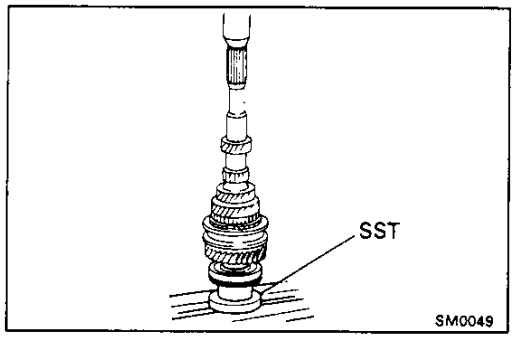

(d) Using SST and a press, install the rear ball bearing.
SST 09608 – 12010 (09608 – 00070)

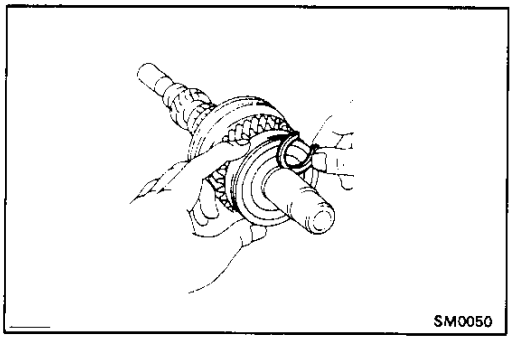

6. INSTALL SNAP RING

(a) Select a snap ring that will allow minimum axial play.

Mark	Thickness mm (in.)
A	2.15 – 2.20 (0.0846 – 0.0866)
B	2.20 – 2.25 (0.0866 – 0.0886)
C	2.25 – 2.30 (0.0886 – 0.0906)
D	2.30 – 2.35 (0.0906 – 0.0925)
E	2.35 – 2.40 (0.0925 – 0.0945)

Downloaded from www.Manualslib.com manuals search engine

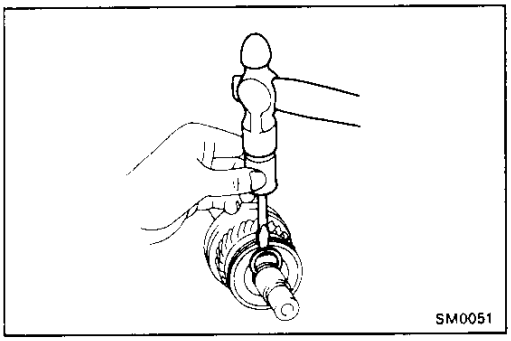

(b) Using a screwdriver and hammer, tap in the snap ring.

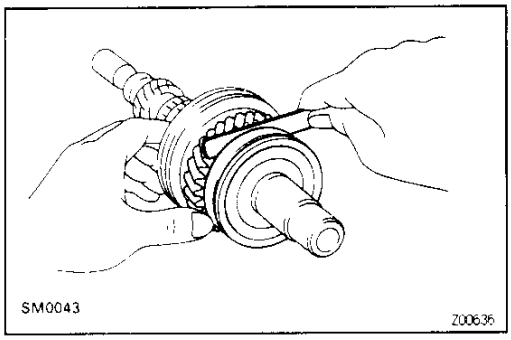

7. INSPECT 4TH GEAR THRUST CLEARANCE

Using a feeler gauge, measure 4th gear thrust clearance.

Standard clearance:

0.20 – 0.45 mm (0.0079 – 0.0177 in.)

Downloaded from www.Manualslib.com manuals search engine

OUTPUT SHAFT
COMPONENTS

MX02M-02

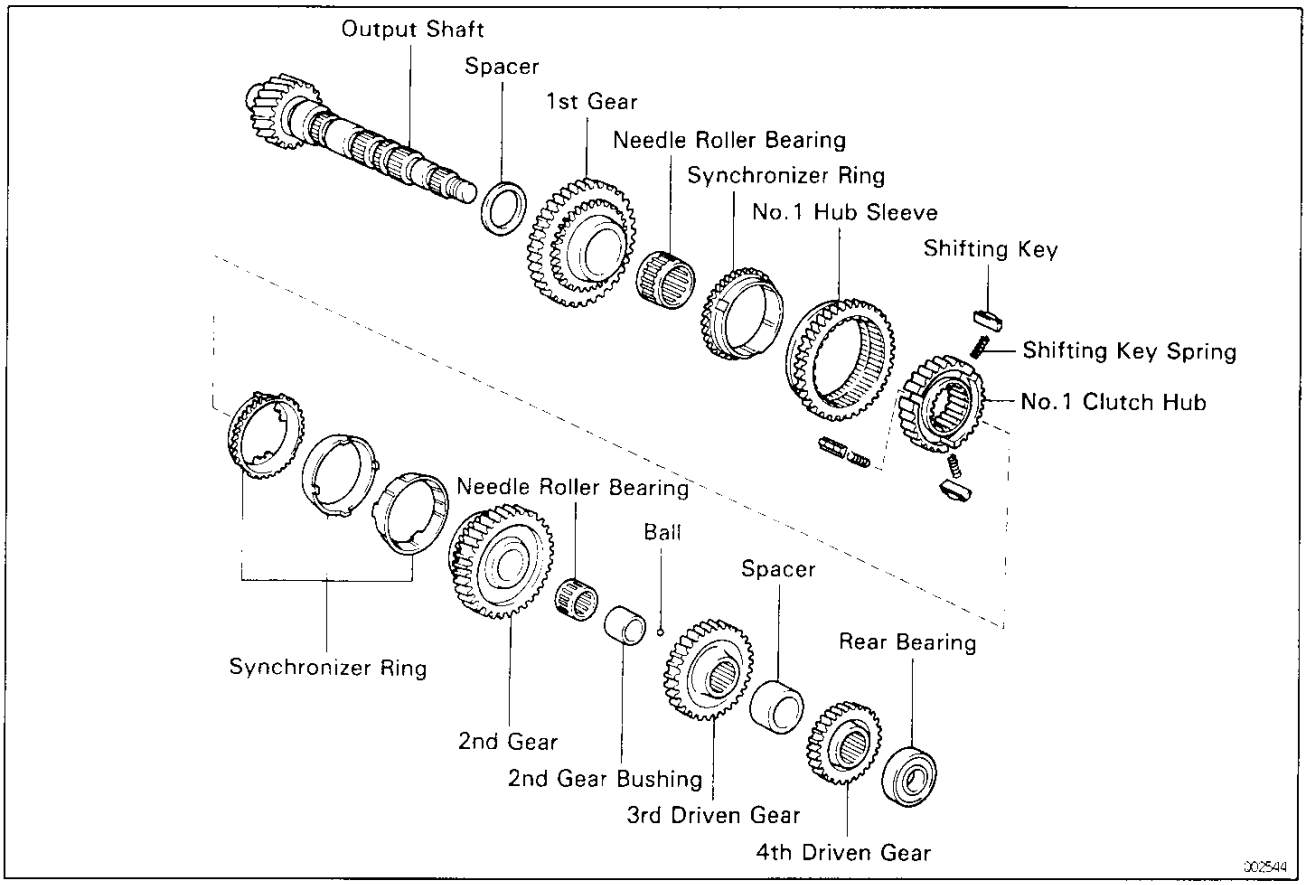

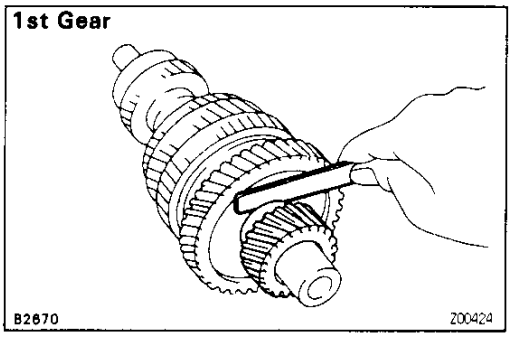

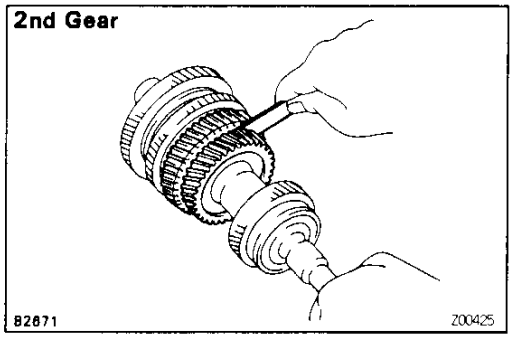

MX037-09

OUTPUT SHAFT DISASSEMBLY

1. **INSPECT 1ST AND 2ND GEAR THRUST CLEARANCE**

   Using a feeler gauge, measure the thrust clearance.

   Standard clearance:

   1st gear

   0.10—0.29 mm (0.0039—0.0114 in.)

   2nd gear

   0.20—0.44 mm (0.0079—0.0173 in.)

   Maximum clearance:

   1st gear

   0.35 mm (0.0138 in.)

   2nd gear

   0.50 mm (0.0197 in.)

Downloaded from www.Manualslib.com manuals search engine

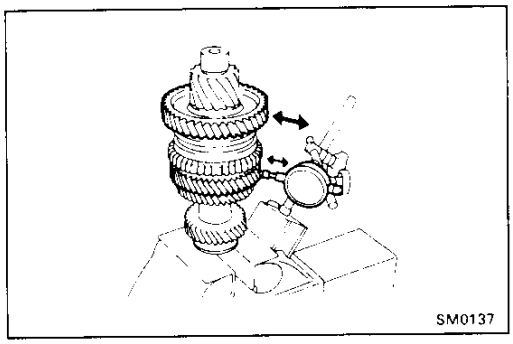

2. INSPECT 1 ST AND 2 ND GEAR RADIAL CLEARANCE

Using dial indicator, measure the radial clearance between the gear and shaft.

Standard clearance:

0.009 – 0.053 mm (0.0004 – 0.0021 in.)

Maximum clearance:

0.070 mm (0.0028 in.)

If the clearance exceeds the maximum, replace the gear, needle roller bearing or shaft.

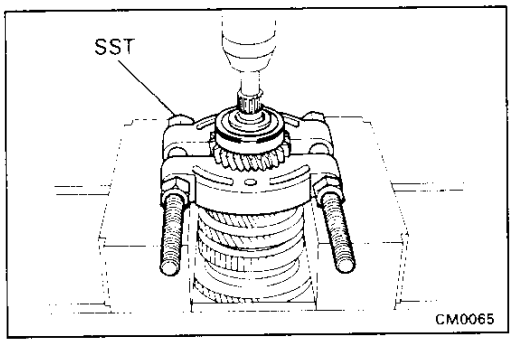

3. REMOVE REAR BALL BEARING, 4TH DRIVEN GEAR AND OUTPUT GEAR SPACER

(a) Using SST and a press, remove the rear ball bearing and 4th driven gear.
SST 09950 – 00020

(b) Remove the output gear spacer and ball.

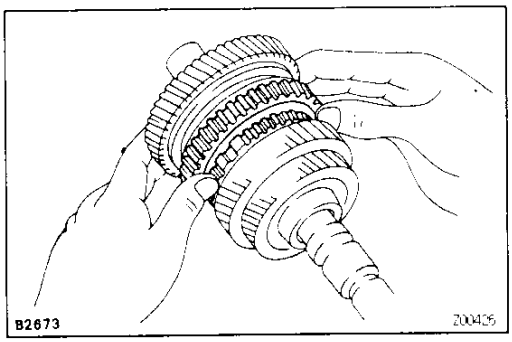

4. REMOVE 3RD DRIVEN GEAR, 2ND GEAR, NEEDLE ROLLER BEARING AND SYNCHRONIZER RING

(a) Shift the No.1 hub sleeve into the 1st gear.

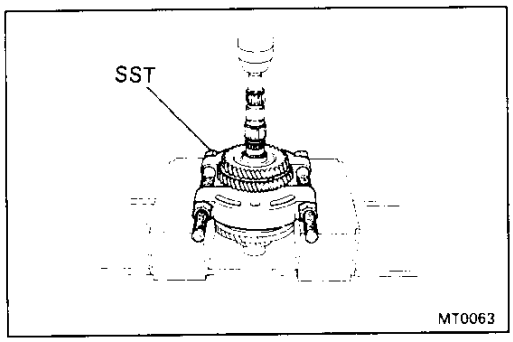

(b) Using SST and a press, remove the 3rd driven gear and 2nd gear.
SST 09950 – 00020

(c) Remove the needle roller bearing and synchronizer rings.

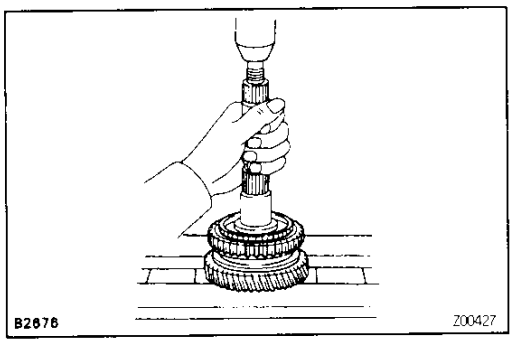

5. REMOVE NO. 1 HUB SLEEVE ASSEMBLY, 1 ST GEAR, SYNCHRONIZER RING, NEEDLE ROLLER BEARING, THRUST WASHER AND LOCKING BALL

(a) Using a press, remove the No.1 hub sleeve, 1st gear and synchronizer ring.

(b) Remove the needle roller bearing and locking ball.

MX

Downloaded from www.Manualslib.com manuals search engine

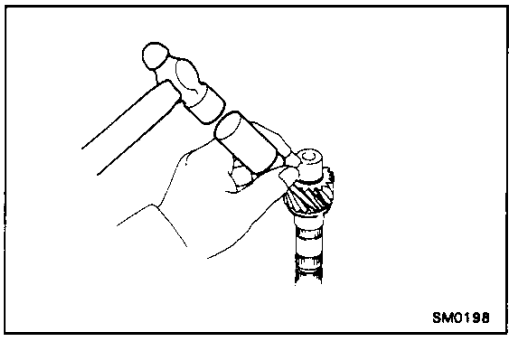

(c) Using a screwdriver and hammer, drive out the thrust washer.

MX

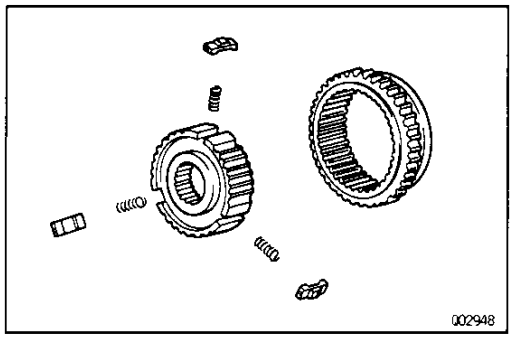

6. REMOVE NO.1 HUB SLEEVE, SHIFTING KEYS AND SPRINGS FROM NO.1 CLUTCH HUB

Downloaded from www.Manualslib.com manuals search engine

MX071-08

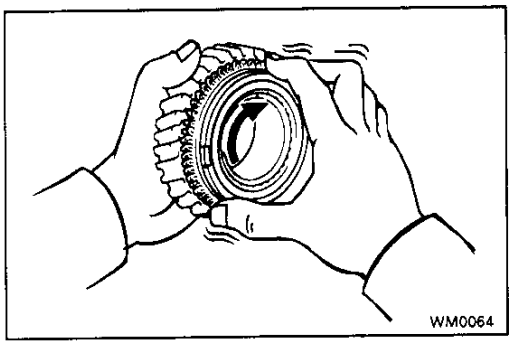

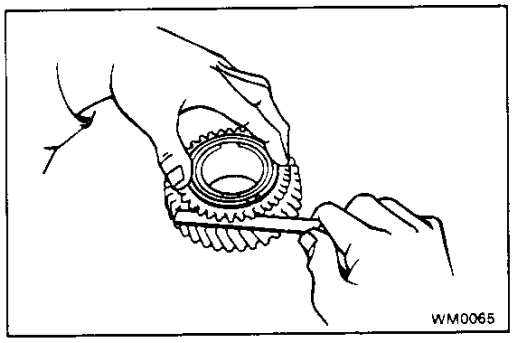

OUTPUT SHAFT COMPONENT PARTS INSPECTION

1. INSPECT 1ST GEAR SYNCHRONIZER RING

(a) Check for wear or damage.

(b) Check the braking effect of the synchronizer ring. Turn the synchronizer ring in one direction while pushing it to the gear cone. Check that the ring locks.
If the braking effect is insufficient, apply a small amount of fine lapping compound between the synchronizer ring and gear cone.
Lightly rub the synchronizer ring and gear cone together.
NOTICE: Ensure the fine lapping compound is completely washed off after rubbing.

(c) Check again the braking effect of the synchronizer ring.

(d) Using a feeler gauge, measure the clearance between the synchronizer ring back and the gear spline end.
Minimum clearance:
0.6 mm (0.024 in.)
HINT:
- When replacing either a synchronizer ring or gear, apply a small amount of fine lapping compound between the synchronizer ring and gear cone.
  Lightly rub the synchronizer ring and gear cone together.
- When replacing both the synchronizer ring and gear, there is no need to apply any compound or to rub them together.

NOTICE: Ensure the fine lapping compound is completely washed off after rubbing.

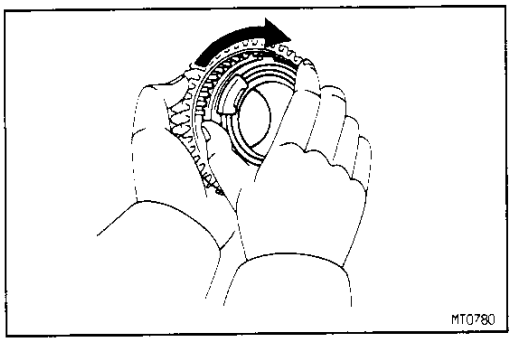

2. INSPECT 2ND GEAR SYNCHRONIZER RING

(a) Check for wear or damage.

(b) Check the braking effect of the synchronizer direction while pushing it to the gear cone. Check that the ring locks.
If the braking effect is insufficient, replace the synchronizer ring.

Downloaded from www.Manualslib.com manuals search engine

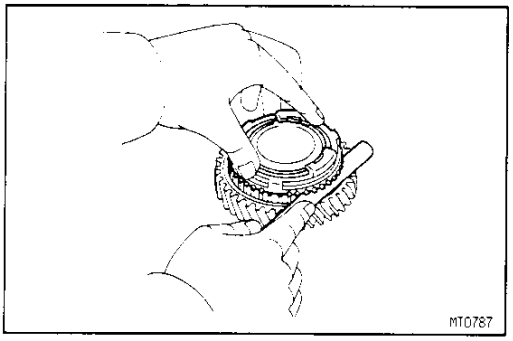

(c) Measure the clearance between the synchronizer ring back and gear spline end.

Minimum clearance:

0.7 mm (0.028 in.)

If the clearance is less than the limit, replace the synchronizer ring.

MX

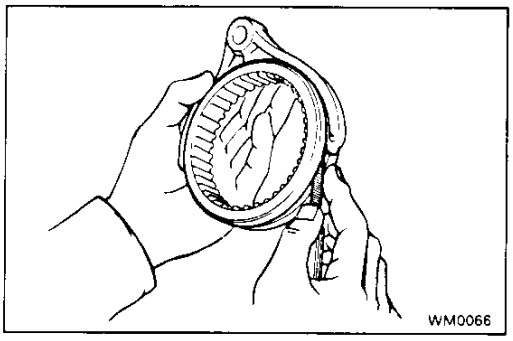

3. INSPECT SHIFT FORKS AND HUB SLEEVES CLEARANCE

Using a feeler gauge, measure the clearance between the hub sleeve and shift fork.

Maximum clearance:

1.0 mm (0.039 in.)

If the clearance exceeds the maximum, replace the shift fork or hub sleeve.

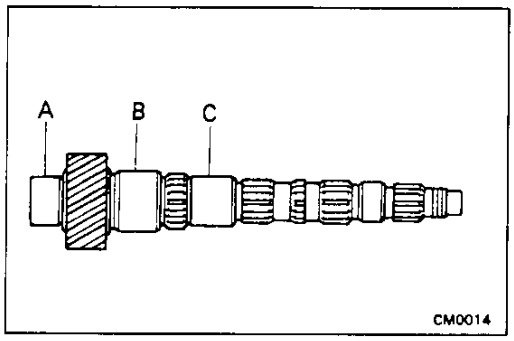

4. INSPECT OUTPUT SHAFT

(a) Using a micrometer, measure the outer diameter of the output shaft journal surface.

Minimum outer diameter:

Part A

31.970 mm (1.2587 in.)

Part B

37.970 mm (1.4949 in.)

Part C

31.990 mm (1.2594 in.)

If the outer diameter is less than the minimum, replace the output shaft.

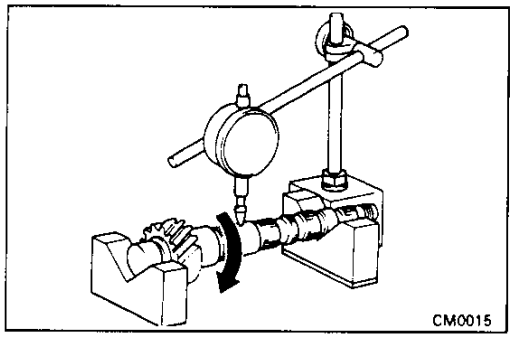

(b) Using a dial indicator, check the shaft runout.

Maximum runout:

0.05 mm (0.0020 in.)

If the runout exceeds the maximum, replace the output shaft.

Downloaded from www.Manualslib.com manuals search engine

MX030-06

OUTPUT SHAFT ASSEMBLY

(See page MX–40)

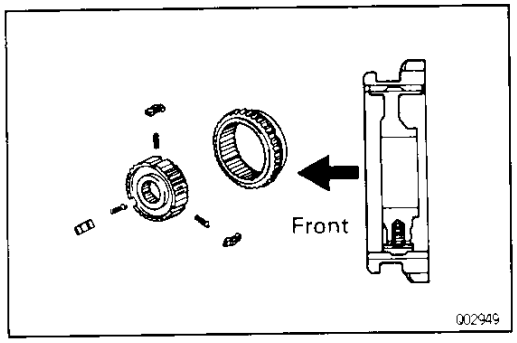

HINT: Coat all of the sliding and rotating surfaces with gear oil before assembly.

1. INSTALL NO.1 CLUTCH HUB INTO HUB SLEEVE

(a) Install the 3 springs and shifting keys to the clutch hub.

(b) Install the hub sleeve to the clutch hub.
HINT: Position the identification groove of the hub sleeve to the front of the transmission.

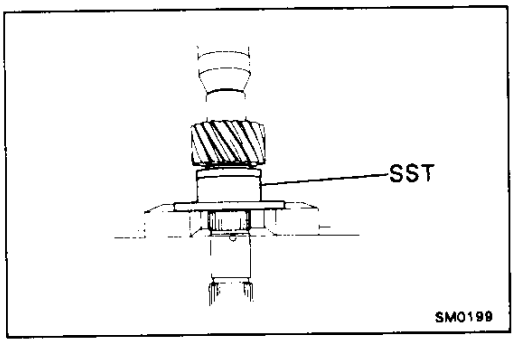

2. INSTALL THRUST WASHER, 1ST GEAR, NEEDLE ROLLER BEARING, SYNCHRONIZER RING AND NO.1 HUB SLEEVE TO OUTPUT SHAFT

(a) Using SST and a press, install the thrust washer.
SST 09316–60010 (09316–00040)

(b) Apply gear oil to the needle roller bearing.

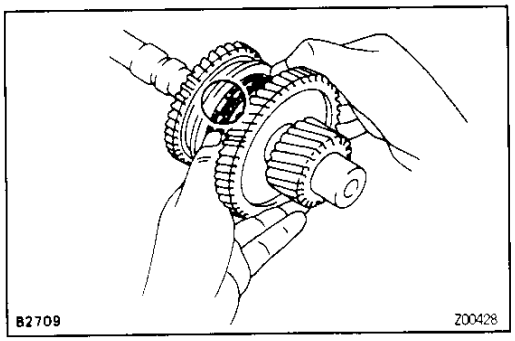

(c) Place the synchronizer ring on the gear and align the ring slots with the shifting keys.

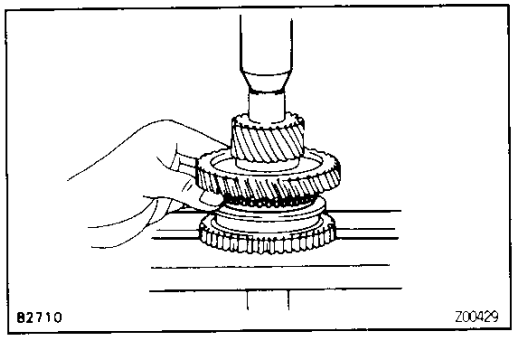

(d) Using a press, install the 1st gear and No.1 hub sleeve.

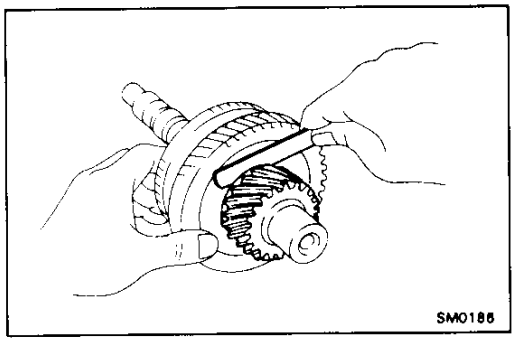

3. INSPECT 1ST GEAR THRUST CLEARANCE

Using a feeler gauge, measure the 1st gear thrust clearance.

Standard clearance:

0.10–0.29 mm (0.0039–0.0114 in.)

Downloaded from www.Manualslib.com manuals search engine

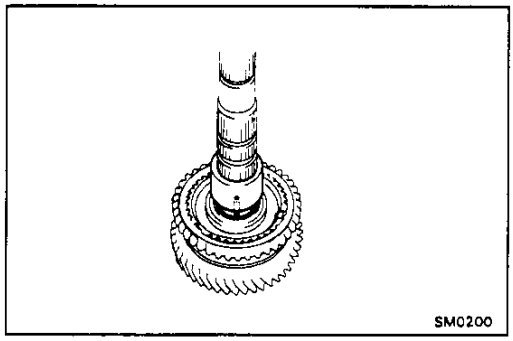

4. INSTALL SYNCHRONIZER RINGS, 2 ND GEAR, NEEDLE ROLLER BEARING AND 3RD DRIVEN GEAR

(a) Install the ball.

(b) Fit the 2nd gear bushing groove securely over the ball when installing the 2nd gear bushing on the shaft.

MX

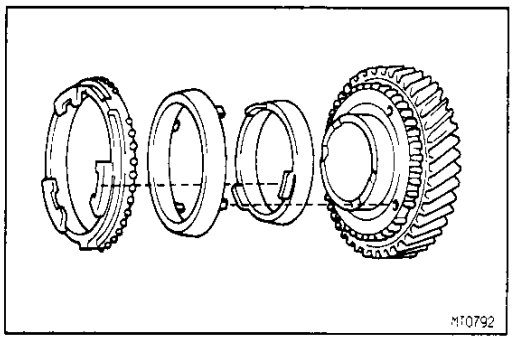

(c) Place the synchronizer rings on the 2nd gear.

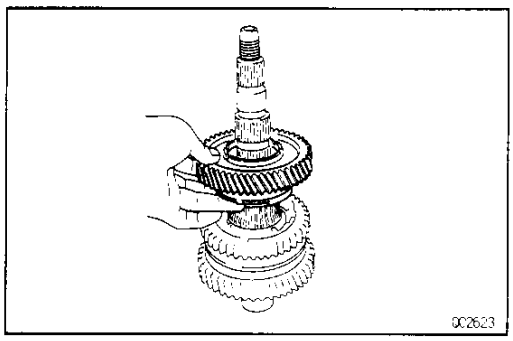

(d) Apply gear oil to the needle roller bearing and install it.

(e) Install the 2nd gear.

NOTICE: Align the clutch hub grooves with the projections on the synchronizer ring.

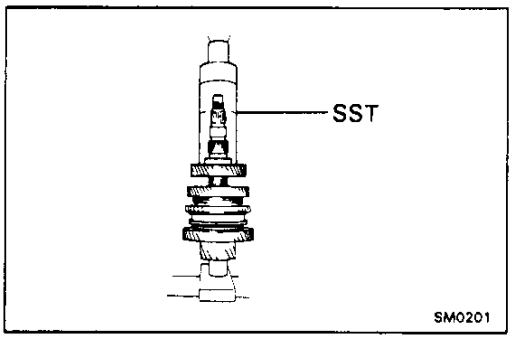

(f) Using SST and a press, install the 3rd driven gear.
SST 09316—60010 (09316—00010)

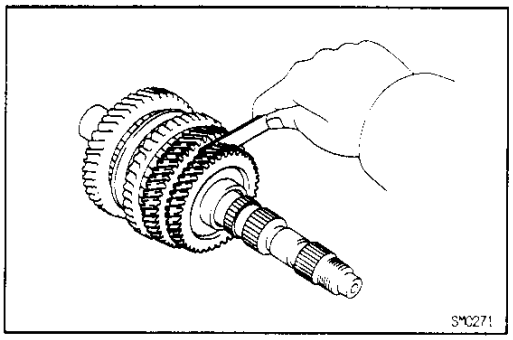

5. INSPECT 2ND GEAR THRUST CLEARANCE

Using a feeler gauge, measure the 2nd gear thrust clearance.

Standard clearance:

0.20—0.44 mm (0.0079—0.0173 in.)

Downloaded from www.Manualslib.com manuals search engine

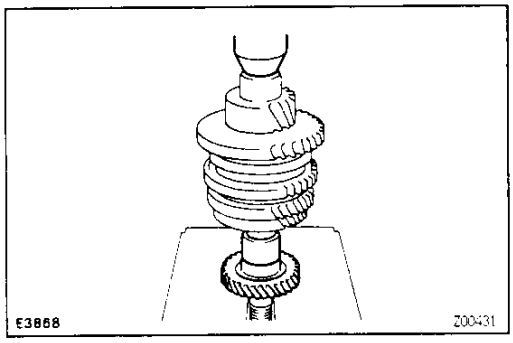

6. INSTALL OUTPUT GEAR SPACER, 4 TH DRIVEN GEAR AND RADIAL BALL BEARING

(a) Install the outer gear spacer.

(b) Using a press, install the 4th driven gear and bearing.

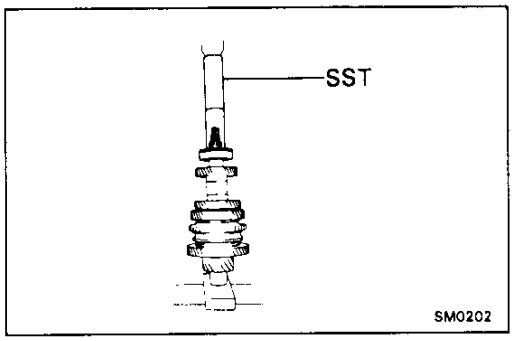

7. INSTALL REAR BEARING

Using SST and a press, install the rear bearing.

SST 09612–22011

Downloaded from www.Manualslib.com manuals search engine

SHIFT AND SELECT LEVER SHAFT

MX03R-03

COMPONENTS

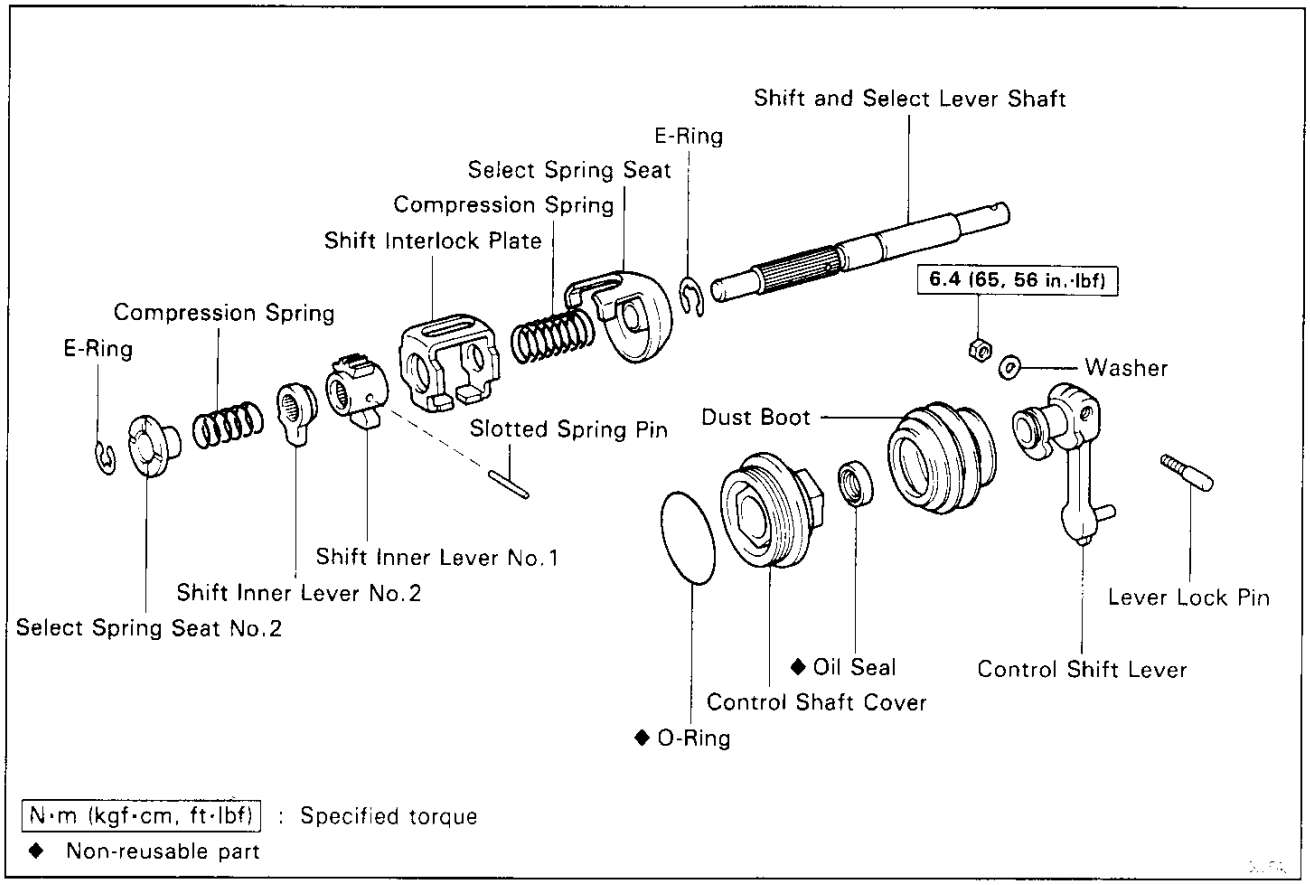

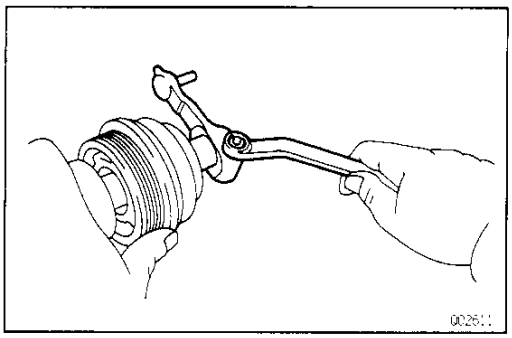

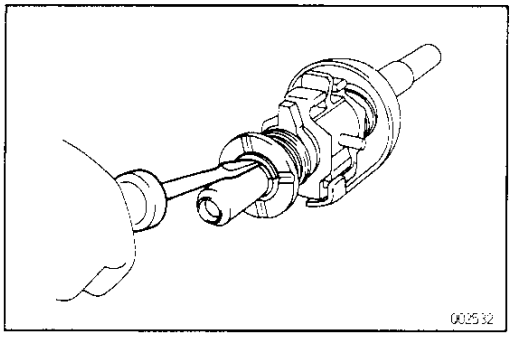

MX038-02

SHIFT AND SELECT LEVER SHAFT DISASSEMBLY

1. REMOVE CONTROL SHIFT LEVER, DUST BOOT AND CONTROL SHAFT COVER

(a) Remove the nut and washer.
(b) Remove the lever lock pin.
(c) Remove the control shift lever.
(d) Remove the dust boot.
(e) Remove the control shaft cover.

2. REMOVE SELECT SPRING SEAT NO.2 AND SHIFT INNER LEVER NO.2

(a) Using a screwdriver, pry out the E–ring.

Downloaded from www.Manualslib.com manuals search engine

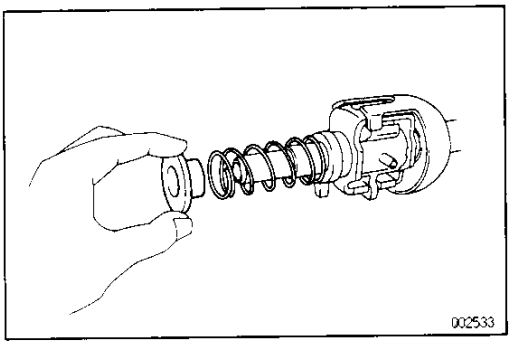

(b) Remove the reverse restrict pin holder, spring and shift inner lever No.2.

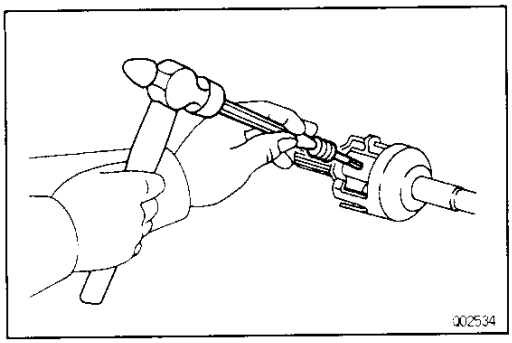

3. REMOVE SHIFT INTERLOCK PLATE, SHIFT INNER LEVER NO.1 AND SELECT SPRING SEAT

MX

(a) Using a pin punch and hammer, drive out the slotted spring pin.

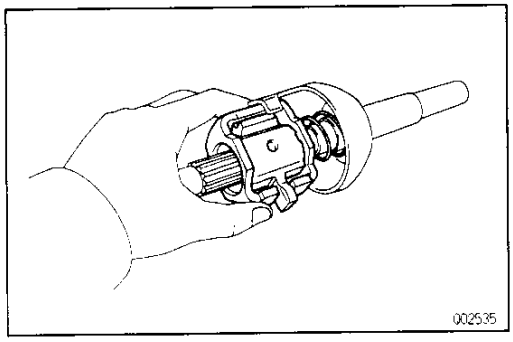

(b) Remove the shift interlock plate, shift inner lever No.1 and select spring seat.

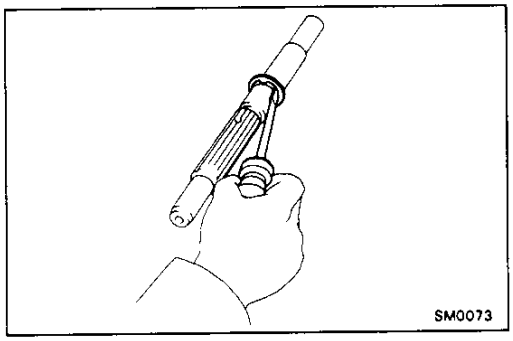

4. REMOVE E – RING FROM SHIFT AND SELECT LEVER SHAFT

Using a screwdriver, pry out the E–ring.

Downloaded from www.Manualslib.com manuals search engine

MX038-03

SHIFT AND SELECT LEVER SHAFT ASSEMBLY

(See page MX–48)

1. APPLY MP GREASE TO PARTS, AS SHOWN

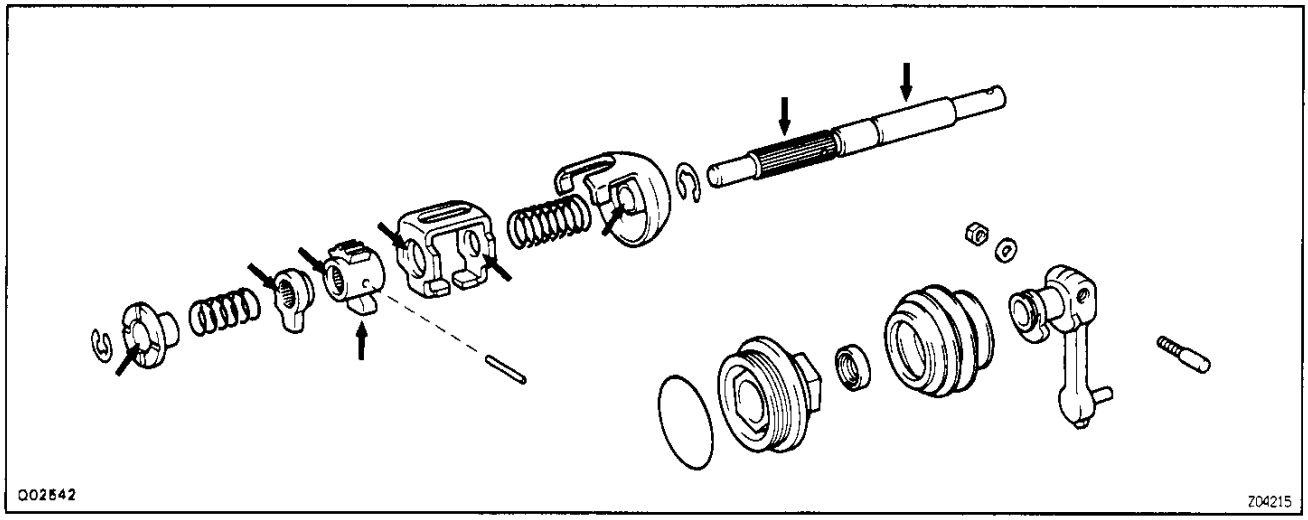

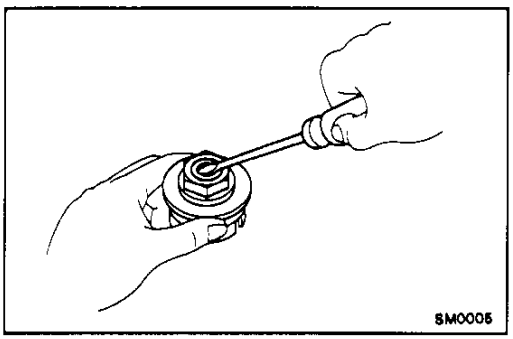

2. IF NECESSARY, REPLACE CONTROL SHAFT COVER OIL SEAL

(a) Using a screwdriver, pry out the oil seal.

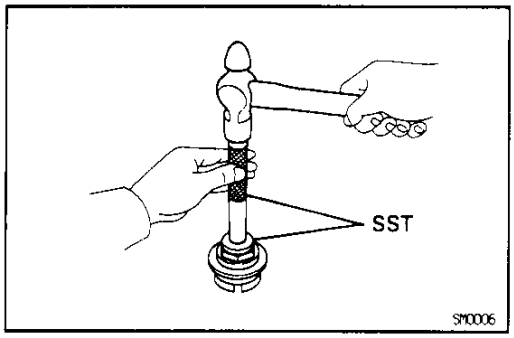

(b) Using SST and a hammer, tap in a new oil seal until its surface is flush with the shaft cover surface.
SST 09608–20012 (09608–00080, 09608–03020)

(c) Coat the lip of the oil seal with MP grease.

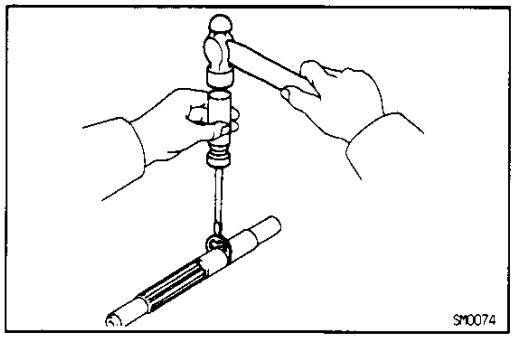

3. INSTALL E–RING TO SHIFT AND SELECT LEVER SHAFT

Downloaded from www.Manualslib.com manuals search engine

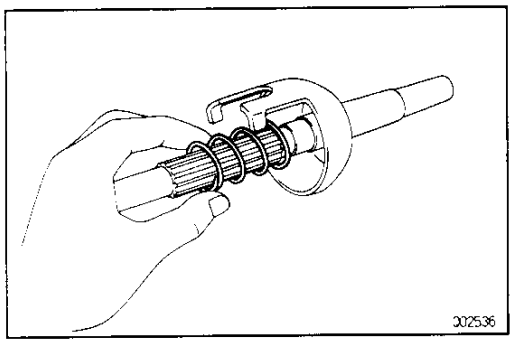

4. INSTALL SELECT SPRING SEAT, SHIFT INNER LEVER NO.1 AND SHIFT INTERLOCK PLATE

(a) Install the select spring seat and spring.

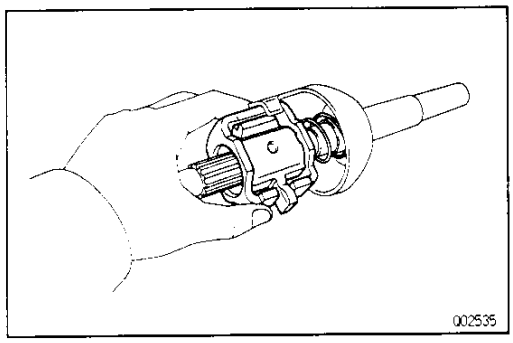

(b) Install the shift inner lever No.1 with the shift interlock plate.
HINT: One of the spline teeth of the shift and select lever shaft has been eliminated. Therefore, be certain to correctly align this portion to the matching portions on the parts during assembly.

MX

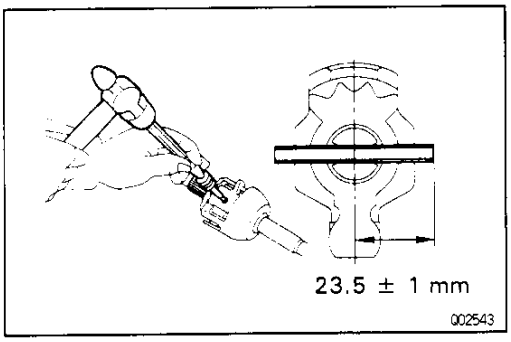

(c) Using a pin punch and hammer, drive in the slotted spring pin.
Drive in depth:
23.5 ± 1.0 mm (0.925 ± 0.039 in.)

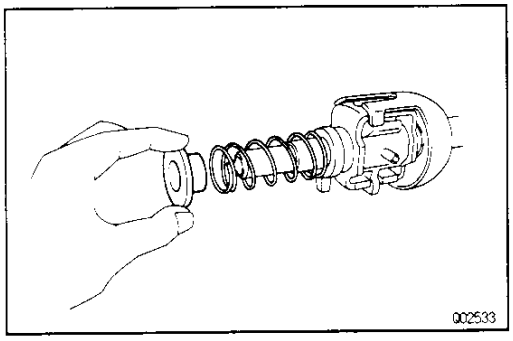

5. INSTALL SHIFT INNER LEVER NO.2 AND SELECT SPRING SEAT NO.2

(a) Install the shift inner lever No.2, spring and select spring seat No.2.

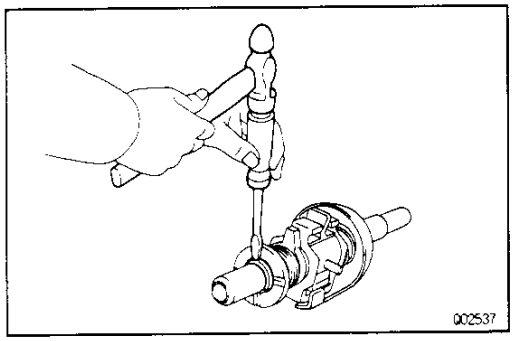

(b) Using a screwdriver and hammer, tap in the E–ring.

Downloaded from www.Manualslib.com manuals search engine

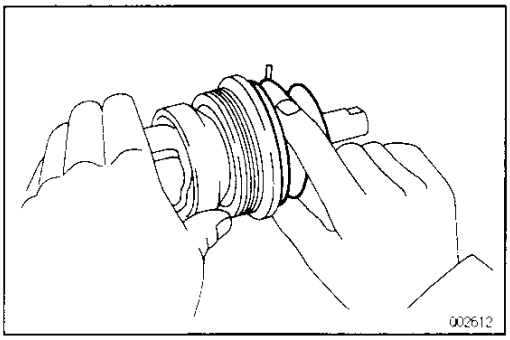

6. INSTALL CONTROL SHAFT COVER, DUST BOOT AND CONTROL SHIFT LEVER

(a) Install the control shaft cover and dust boot.
HINT: Make sure to install the boot in correct direction. Position the air bleed of the boot downward.

MX

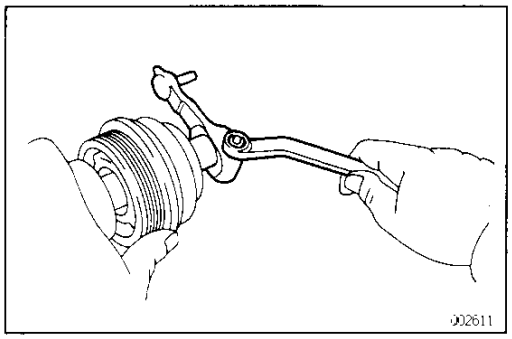

(b) Install the control shift lever.
(c) Install the lever lock pin to the control shift lever.
(d) Install the washer and lock nut.
Torque: 6.4 N·m (65 kgf·cm, 56 in.·lbf)

Downloaded from www.Manualslib.com manuals search engine

DIFFERENTIAL CASE
COMPONENTS

MX02U-03

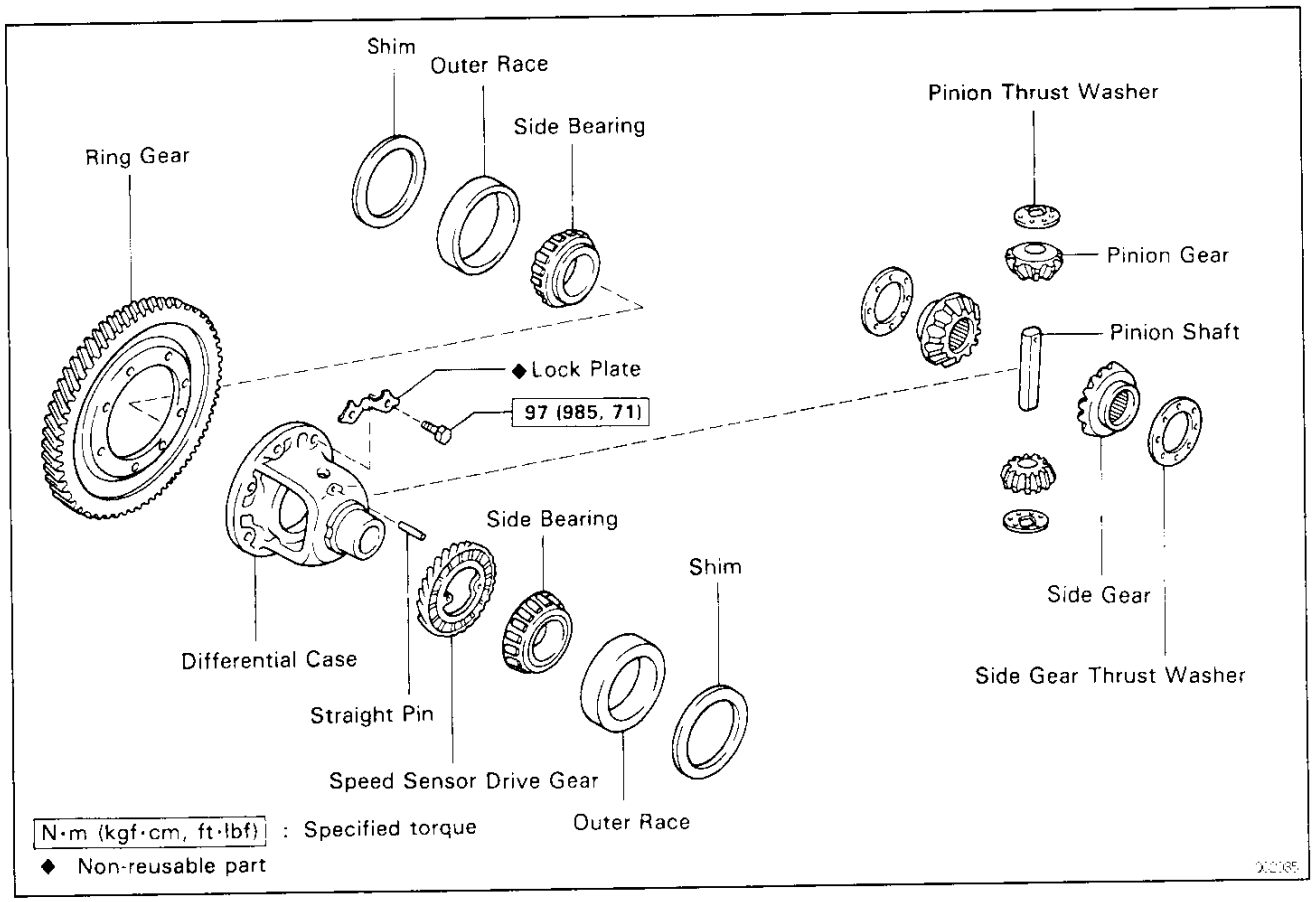

MX03A-0A

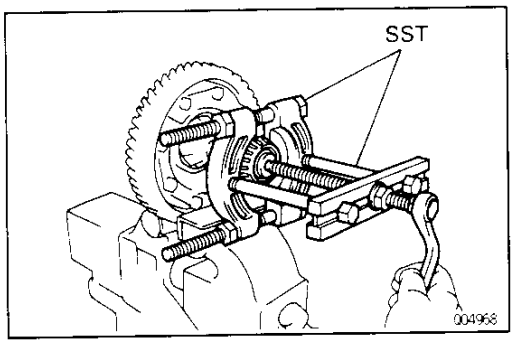

DIFFERENTIAL CASE DISASSEMBLY

1. REMOVE SIDE BEARING FROM DIFFERENTIAL CASE (SPEED SENSOR DRIVE GEAR SIDE)

(a) Using SST, remove the bearing from drive gear side of the case.
SST 09950–00020, 09950–00030

(b) Remove the speed sensor drive gear.

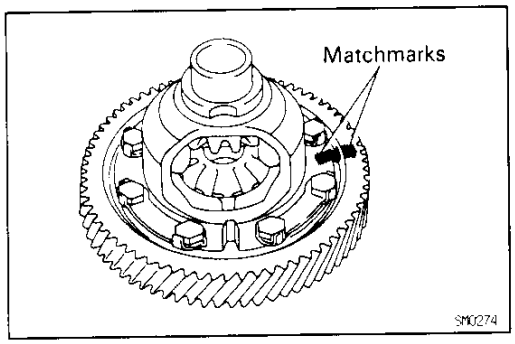

2. REMOVE RING GEAR

(a) Place matchmarks on the ring gear and the case.

Downloaded from www.Manualslib.com manuals search engine

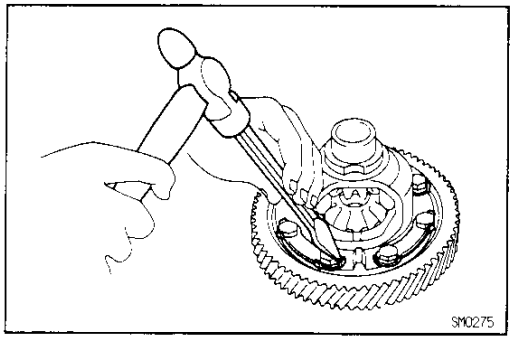

(b) Using a chisel and hammer, unstake the lock plates.
(c) Remove the 8 bolts and 4 lock plates.

MX

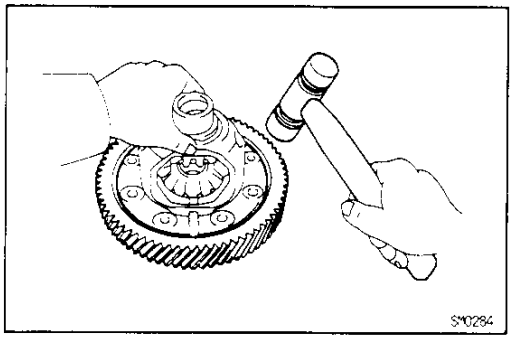

(d) Using a copper hammer, tap on the ring gear to remove it from the case.

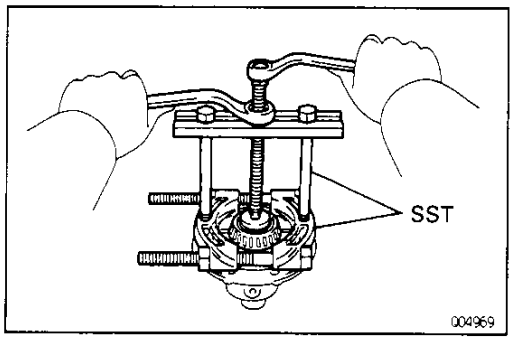

3. REMOVE SIDE BEARING FROM DIFFERENTIAL CASE (RING GEAR SIDE)

Using SST, remove the bearing from ring gear of side of the case.

SST 09950–00020, 09950–00030

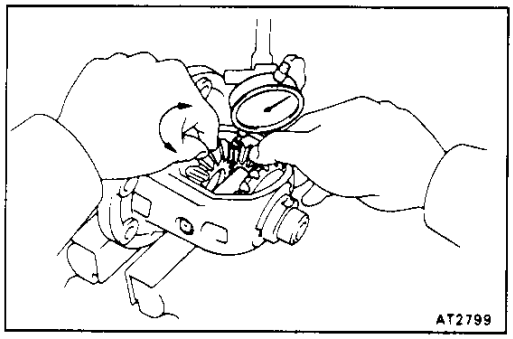

4. INSPECT SIDE GEAR BACKLASH

Using a dial indicator, measure the backlash of one side gear while holding one pinion toward the case.

Standard backlash:

0.05–0.20 mm (0.0020–0.0079 in.)

If the backlash does not meet specification, install the correct thrust washer to the side gears.

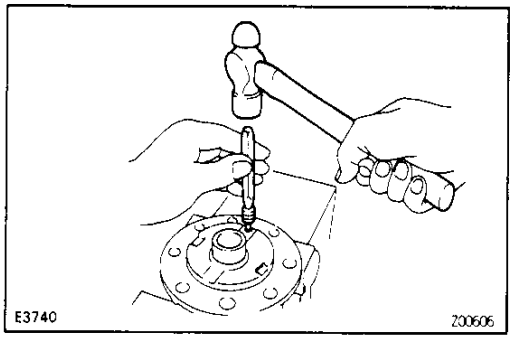

5. DISASSEMBLE DIFFERENTIAL CASE

(a) Using a pin punch and hammer, drive out the straight pin.

Downloaded from www.Manualslib.com manuals search engine

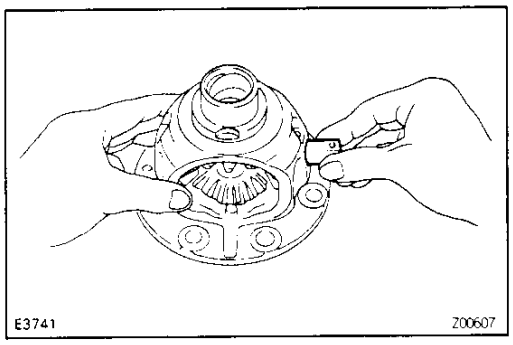

(b) Remove the pinion shaft from the case.
(c) Remove the 2 pinions and 2 side gears with the 4 thrust washers from each gear.

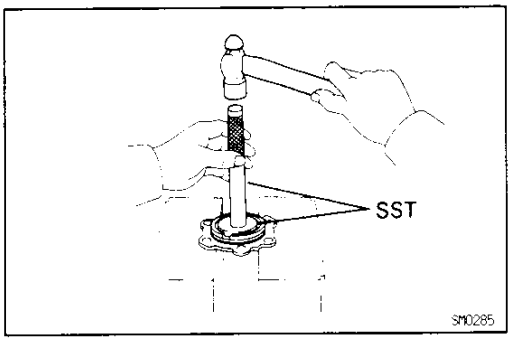

6. TRANSMISSION CASE SIDE:
IF NECESSARY, REPLACE DIFFERENTIAL SIDE BEARING RETAINER OIL SEAL

(a) Using SST and a hammer, drive out the oil seal from the retainer.
SST 09608–20012 (09608–03020, 09608–03060)

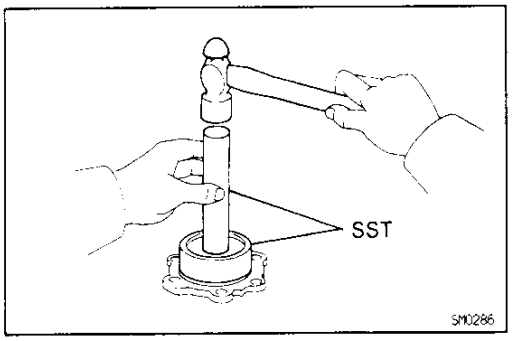

(b) Using SST and a hammer, drive in a new oil seal until its surface is flush with the case surface.
SST 09350–32014 (09351–32130, 09351–32150)
(c) Coat the lip of the oil seal with MP grease.

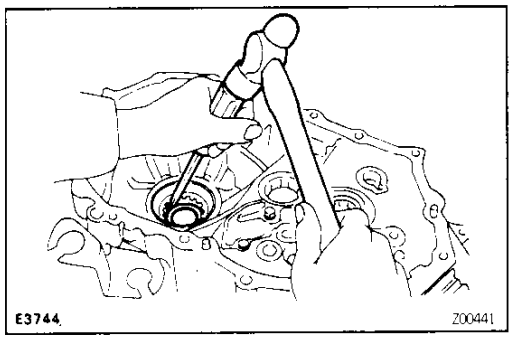

7. TRANSAXLE CASE SIDE:
IF NECESSARY, REPLACE SIDE OIL SEAL

(a) Using a screwdriver and hammer, drive out the oil seal.

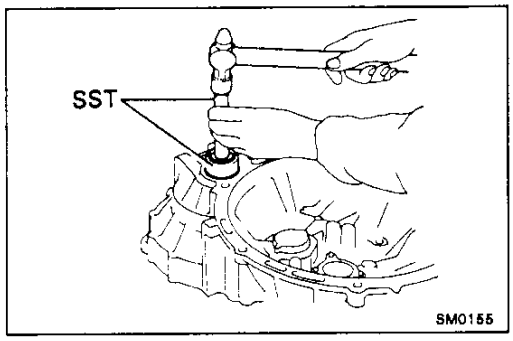

(b) Using SST and a hammer, drive in a new oil seal until its surface is flush with the case surface.
SST 09350–32014 (09351–32130, 09351–32150)
(c) Coat the lip of oil seal with MP grease.

Downloaded from www.Manualslib.com manuals search engine

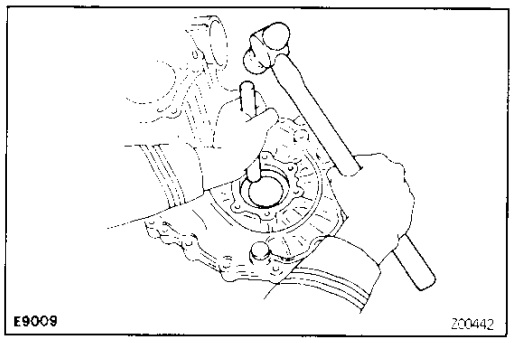

8. TRANSMISSION CASE SIDE:
IF NECESSARY, REPLACE SIDE BEARING OUTER RACE

(a) Using a brass bar and hammer, drive out the bearing outer race.

MX

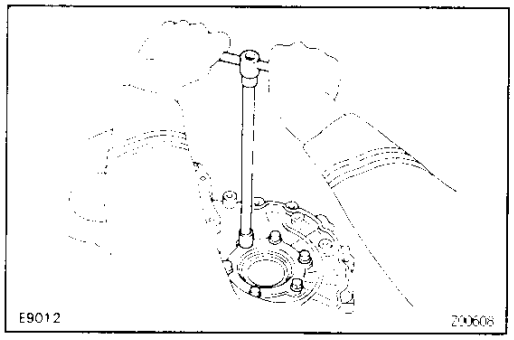

(b) Install the bearing retainer without an O–ring.
(c) Install and torque the 6 bolts.
Torque: 18 N·m (185 kgf·cm, 13 ft·lbf)

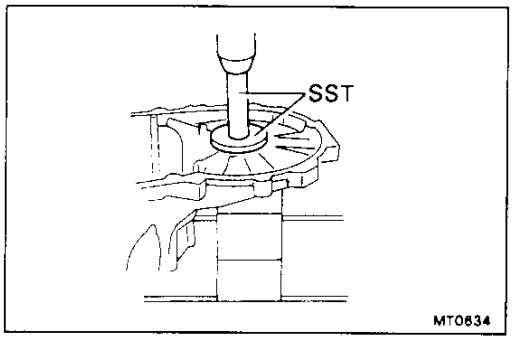

(d) Place the thinnest shim into the case.
(e) Using SST and a press, install a new bearing outer race.
SST 09608–20012 (09608–03020, 09608–03060)

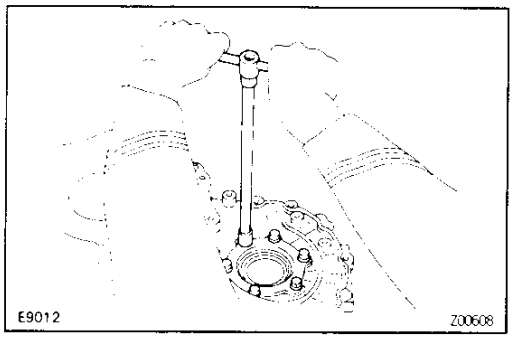

(f) Remove the 6 bolts.
(g) Remove the bearing retainer and shim.

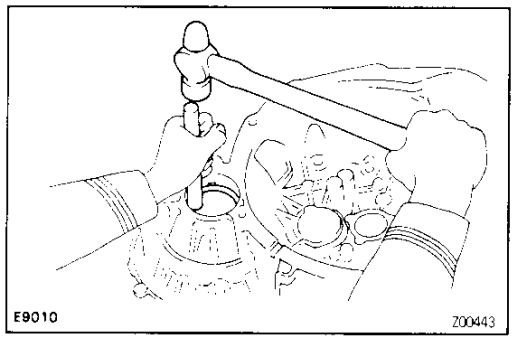

9. TRANSAXLE CASE SIDE:
IF NECESSARY, REPLACE SIDE BEARING OUTER RACE

(a) Using a brass bar and hammer, drive out the bearing outer race and shim.

Downloaded from www.Manualslib.com manuals search engine

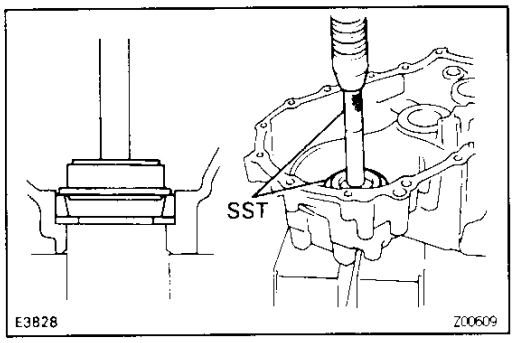

(b) Place the shim into the case.

(c) Using SST and a press, install a new bearing outer race.
SST 09608–20012 (09608–03020, 09608–03060)

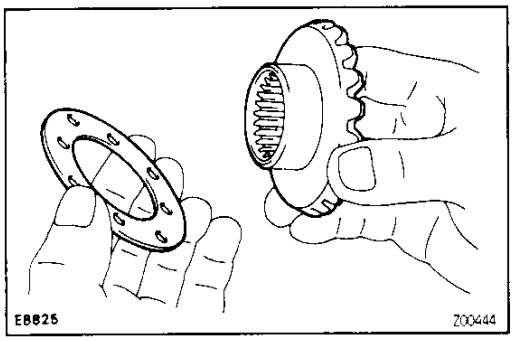

DIFFERENTIAL CASE ASSEMBLY
(See page MX–53)

MX

1. ASSEMBLE DIFFERENTIAL CASE

(a) Install the correct thrust washers and side gears.
Referring to the table below, select thrust washers which will ensure that the backlash is within specification. Try to select washers of the same size for both sides.

Standard backlash:

0.05–0.20 mm (0.0020–0.0079 in.)

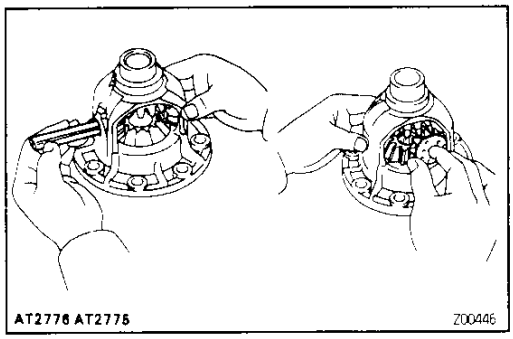

Thickness mm (in.)	Thickness mm (in.)
0.95 (0.0374)	1.10 (0.0433)
1.00 (0.0394)	1.15 (0.0453)
1.05 (0.0413)	1.20 (0.0472)

Install the thrust washers and side gears in the differential case.

(b) Install the pinion shaft.

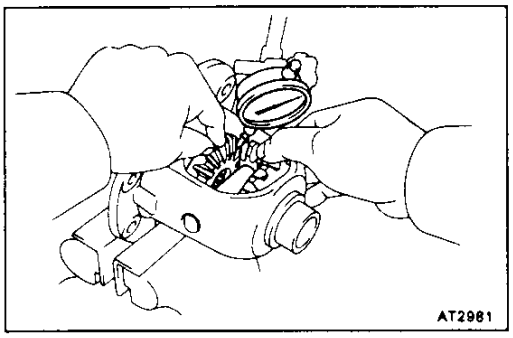

(c) Inspect the side gear backlash.
Measure the side gear backlash while holding one pinion gear toward the case.

Standard backlash:

0.05–0.20 mm (0.0020–0.0079 in.)

If the backlash is not within specification, install a thrust washer of different thickness.

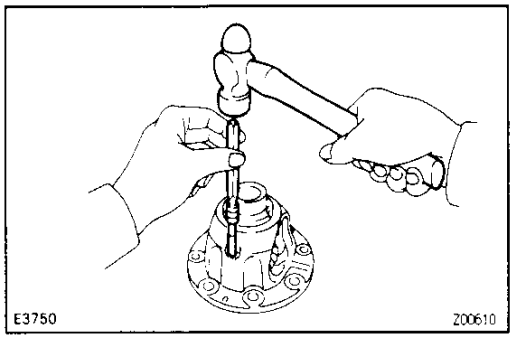

(d) Using a pin punch and hammer, drive in the straight pin through the case and hole in the pinion shaft.

Downloaded from www.Manualslib.com manuals search engine

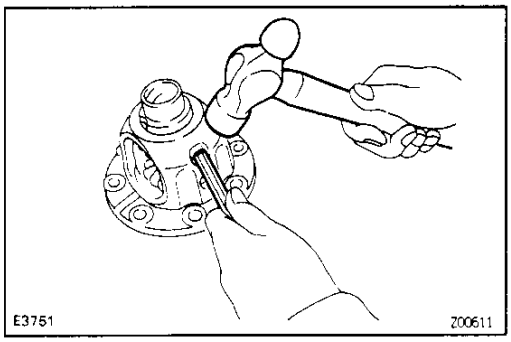

(e) Stake the differential case.

MX

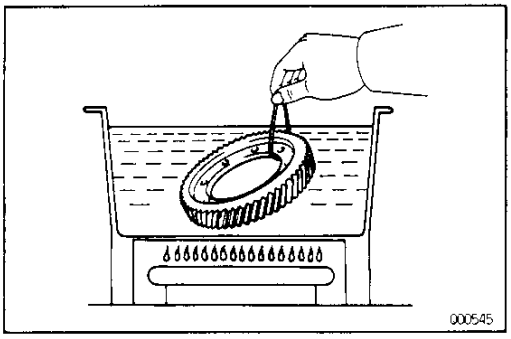

2. INSTALL RING GEAR ON DIFFERENTIAL CASE

(a) Clean the contact surface of the differential case and the threads of the ring gear and differential case.

(b) Heat the ring gear in boiling water.

(c) Carefully remove the ring gear from the water.

(d) After moisture on the ring gear has completely evaporated, quickly install the ring gear to the differential case.
HINT: Align the matchmarks on the differential case and contact the ring gear.

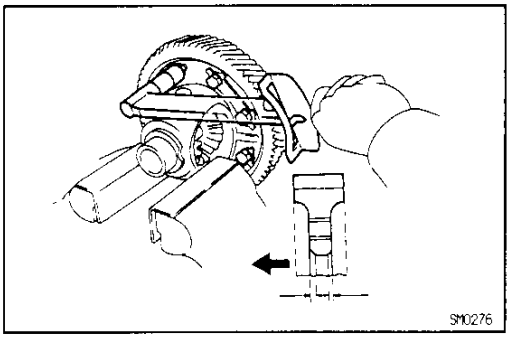

(e) Temporarily install the 8 bolts and 4 lock plates.
NOTICE: The ring gear set bolts should not be torqued until the ring gear has cooled sufficiently.

(f) After the ring gear has cooled sufficiently, torque the ring gear set bolts.
Torque: 97 N·m (985 kgf·cm, 71 ft·lbf)

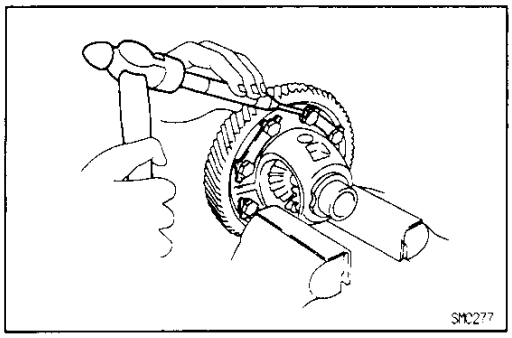

(g) Using a pin punch and hammer, stake the lock plates.
HINT: Stake one claw flush with the flat surface of the bolt. For the claw contacting the protruding portion of the bolt, stake only the tightened side.

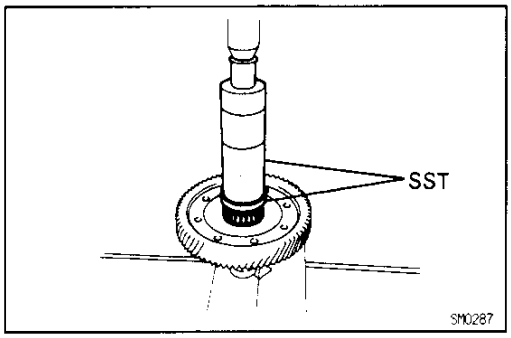

3. INSTALL SIDE BEARING TO DIFFERENTIAL CASE

(a) Using SST and a press, install a new side bearing to the transmission case side.
SST 09316–60010 (09316–00010)
09350–32014 (09351–32120)

Downloaded from www.Manualslib.com manuals search engine

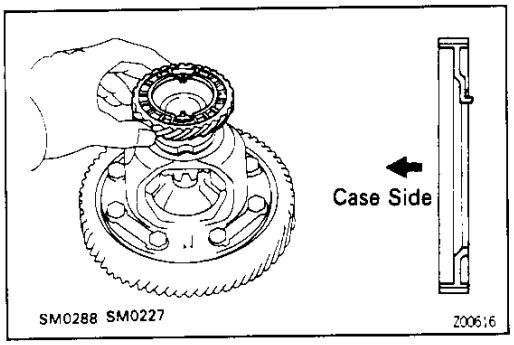

(b) Install the speed sensor drive gear to the transaxle case side.

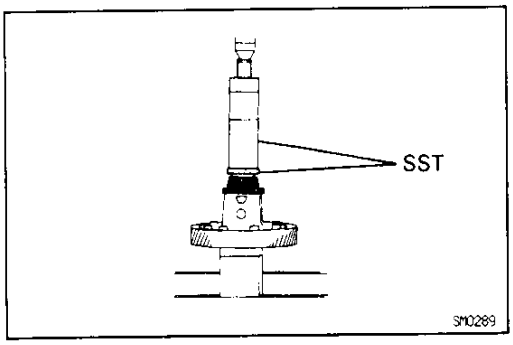

(c) Using SST and a press, install a new side bearing to the transaxle case side.
SST 09316–60010 (09316–00010)
09350–32014 (09351–32120)
NOTICE: Install the black cage bearing on the speed sensor drive gear side.

MX

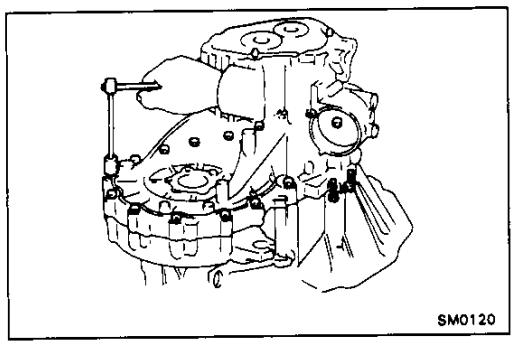

4. ADJUST DIFFERENTIAL CASE SIDE BEARING PRE-LOAD

(a) Install the differential to the transaxle case.
(b) Install the transmission case.
(c) Install and torque the case bolts.
Torque: 29 N·m (300 kgf·cm, 22 ft·lbf)

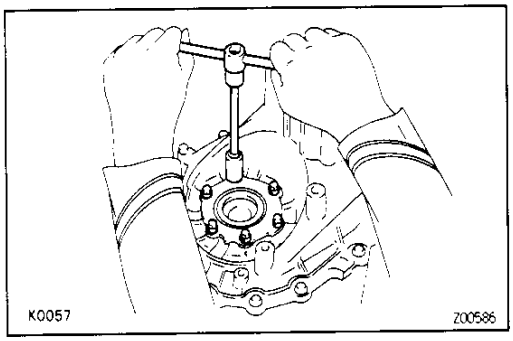

(d) Install the shim into the transmission case.
(e) Install the bearing retainer without an O–ring.
(f) Install and torque the retainer bolts.
Torque: 18 N·m (185 kgf·cm, 13 ft·lbf)

Downloaded from www.Manualslib.com manuals search engine

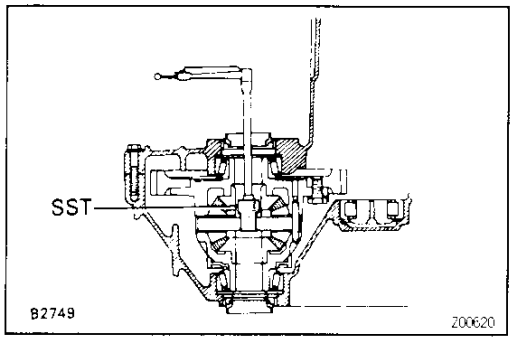

(g) Using SST and torque meter, measure the preload.
SST 09564–32011
Preload (at starting):
0.8–1.6 N·m (8–16 kgf·cm, 6.9–13.9 in.·lbf)
If the preload is not within specification, remove the transmission case side bearing retainer.
Select another shim.
HINT: The preload will change by about 0.3–0.4 N·m (3–4 kgf·cm, 2.6–3.5 in.·lbf) with each 0.05 mm change in shim thickness.

MX

Mark	Thickness mm (in.)	Mark	Thickness mm (in.)
1	1.90 (0.0748)	11	2.40 (0.0945)
2	1.95 (0.0768)	12	2.45 (0.0965)
3	2.00 (0.0787)	13	2.50 (0.0984)
4	2.05 (0.0807)	14	2.55 (0.1004)
5	2.10 (0.0827)	15	2.60 (0.1024)
6	2.15 (0.0846)	16	2.65 (0.1043)
7	2.20 (0.0866)	17	2.70 (0.1063)
8	2.25 (0.0886)	18	2.75 (0.1083)
9	2.30 (0.0906)	19	2.80 (0.1102)
10	2.35 (0.0925)		

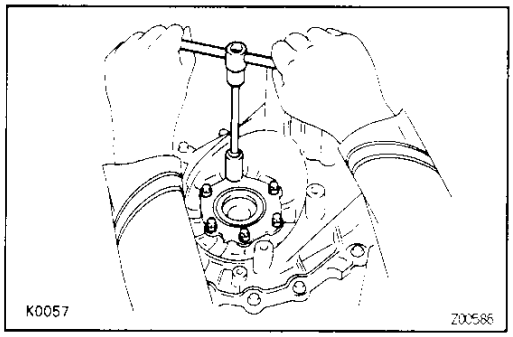

(h) Remove the 6 bolts.
(i) Remove the bearing retainer and shim.

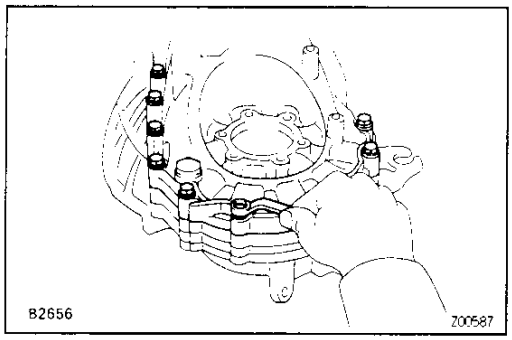

(j) Remove the 17 bolts.
(k) Remove the transmission case.

Downloaded from www.Manualslib.com manuals search engine

COMPONENT PARTS INSTALLATION

MX072-06

BASIC SUBASSEMBLY REASSEMBLY

(See page MX–21 and MX–22)

HINT: Coat all of the sliding and rotating surfaces with gear oil before assembly.

1. **INSPECT DIFFERENTIAL SIDE BEARING PRELOAD**
   (See step 4 on page MX–60)

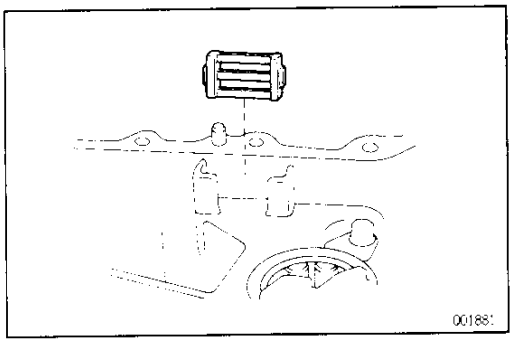

2. **INSTALL MAGNET TO TRANSAXLE CASE**

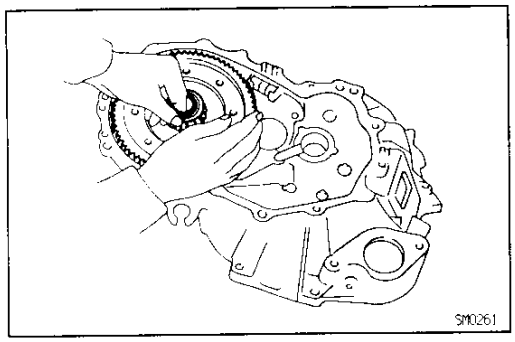

3. **INSTALL DIFFERENTIAL CASE ASSEMBLY**

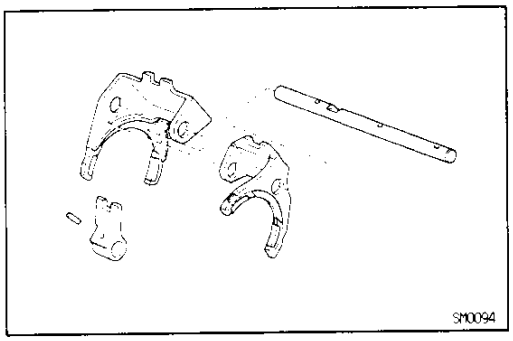

4. **ASSEMBLE NO.1 SHIFT FROK SHAFT, NO.1 SHIFT HEAD, NO.1 AND NO.2 SHIFT FORKS**

(a) Assemble the No.1 shift fork shaft, No.1 shift head, No.1 and No.2 shift forks.

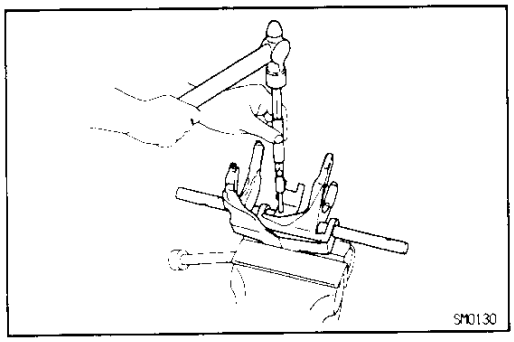

(b) Mount the shift forks to the vise.

(c) Using a pin punch and hammer, drive in the slotted spring pin to the No.1 fork shaft as shown in the illustration.

Downloaded from www.Manualslib.com manuals search engine

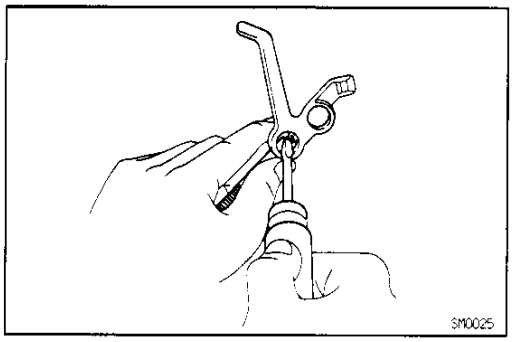

(d) Coat the interlock pin with MP grease.
(e) Using a screwdriver, install the interlock pin into the reverse shift fork hole.
(f) Install the reverse shift fork to the No.1 shift fork shaft.
HINT: When installing the reverse shift fork with interlock pin to the No.1 shift fork shaft, make sure the interlock pin does not drop out.
NOTICE: Be careful not to damage the bushing.

MX

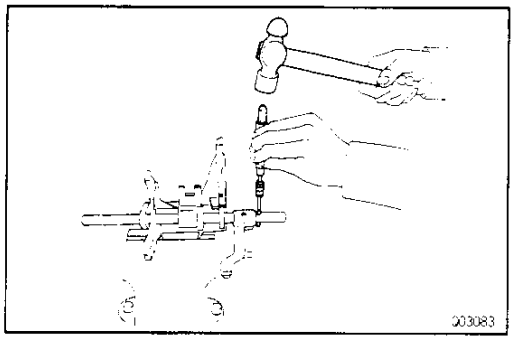

(g) Using a pin punch and hammer, drive in the slotted spring pin to the No.1 fork shaft.

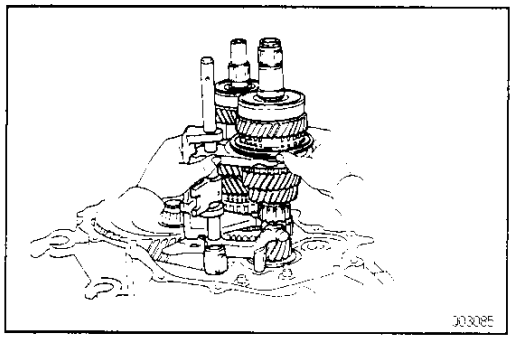

5. INSTALL NO.1 SHIFT FORK SHAFT, NO.1 SHIFT HEAD, NO.1, NO.2 SHIFT FORKS, REVERSE SHIFT FORK WITH INTERLOCK PIN, INPUT AND OUTPUT SHAFT ASSEMBLY

Install the input and output shaft assembly together with the No.1 fork shaft, shift head and shift forks with the interlock pin to the transaxle case.

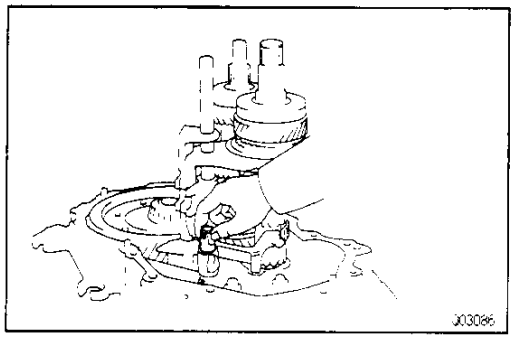

6. INSTALL NO.2 FORK SHAFT

(a) Install the No.2 fork shaft to the transaxle case through the reverse shift fork.

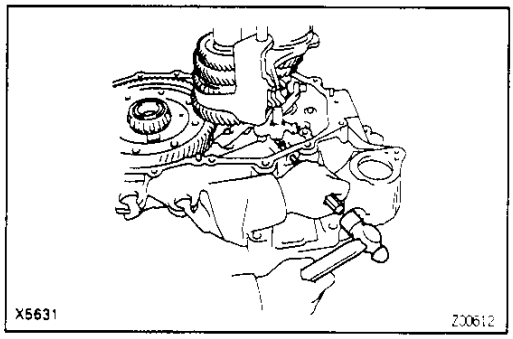

(b) Using a pin punch and hammer, drive in the slotted spring pin.

Downloaded from www.Manualslib.com manuals search engine

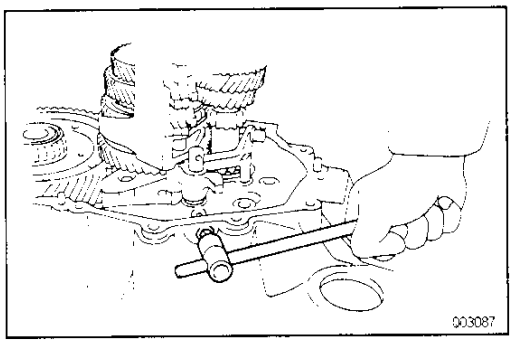

(c) Apply sealant to the plug threads.
Sealant:
Part No.08833–00080, THREE BOND 1344, LOCTITE 242 or equivalent

(d) Using a hexagon wrench, install the straight screw plug.
Torque: 13 N·m (130 kgf·cm, 9 ft·lbf)

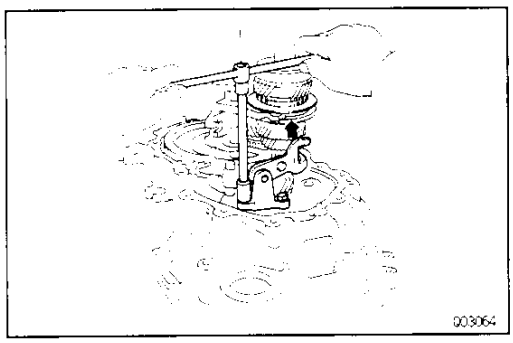

7. INSTALL REVERSE SHIFT ARM

(a) Put the reverse shift fork pivot into the reverse shift arm and install the reverse shift arm to the transaxle case.

(b) Shift the reverse shift arm into the reverse.

(c) Install and torque the 2 bolts.
Torque: 18 N·m (185 kgf·cm, 13 ft·lbf)

(d) Shift the reverse shift arm to the neutral position.

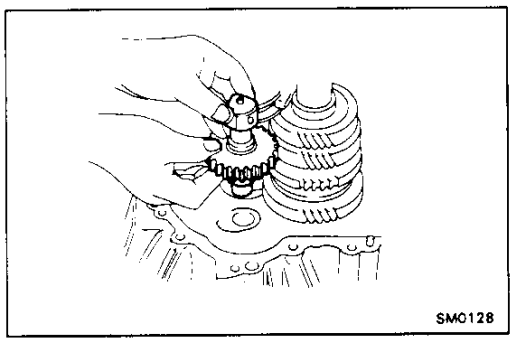

8. INSTALL REVERSE IDLER GEAR AND SHAFT

(a) Install the washer and reverse idler gear to the shaft.

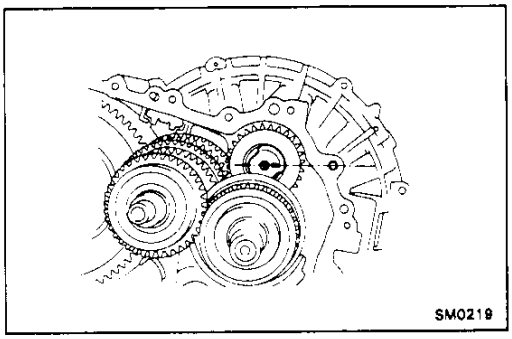

(b) Install the reverse idler gear and shaft as shown.

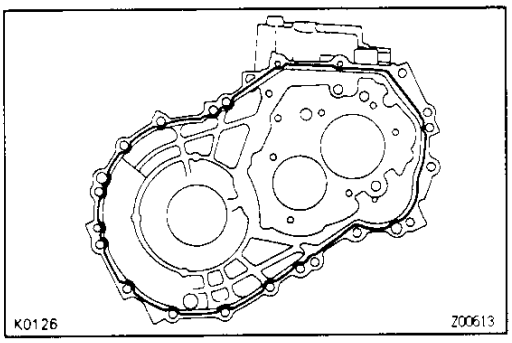

9. INSTALL TRANSMISSION CASE

(a) Remove any FIPG material and be careful not to drop oil on the contacting surface of the transaxle case or transmission case.

(b) Apply FIPG to the transmission case as shown.
FIPG:
Part No.08833–00090, THREE BOND 1281 or equivalent

Downloaded from www.Manualslib.com manuals search engine

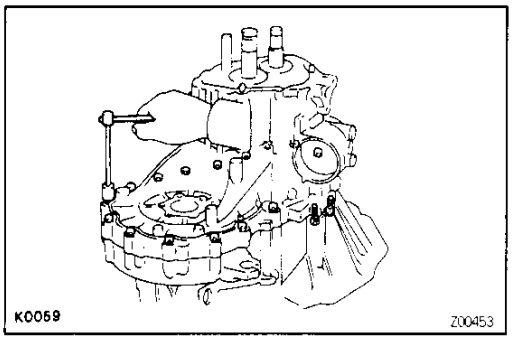

(c) Install and torque the 17 bolts.
Torque: 29 N·m (300 kgf·cm, 22 ft·lbf)

MX

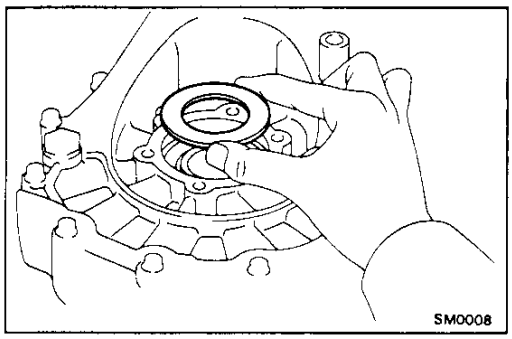

10. INSTALL SHIM AND SIDE BEARING RETAINER WITH O–RING

(a) Install a new O–ring on the retainer.
(b) Install the shim and retainer.

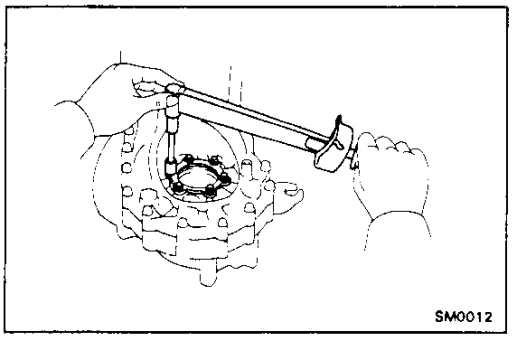

(c) Apply sealant to the bolt threads.
Sealant:
Part No.08833–00080, THREE BOND 1344, LOCTITE 242 or equivalent
(d) Install and torque the 6 bolts.
Torque: 18 N·m (185 kgf·cm, 13 ft·lbf)

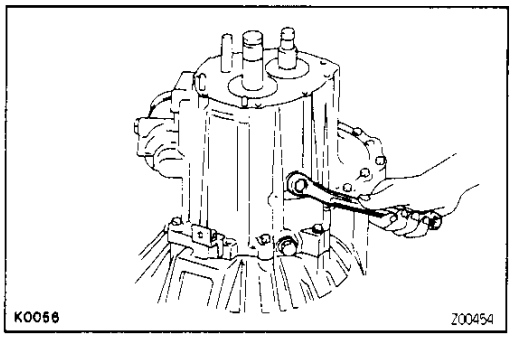

11. INSTALL AND TORQUE REVERSE IDLER GEAR SHAFT LOCK BOLT
Torque: 29 N·m (300 kgf·cm, 22 ft·lbf)

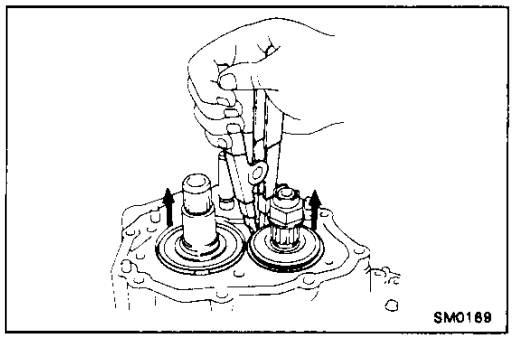

12. INSTALL BEARING SNAP RINGS
Using a snap ring expander, install the 2 snap rings.
HINT: If it is difficult to install the snap ring, pull up the shafts.

Downloaded from www.Manualslib.com manuals search engine

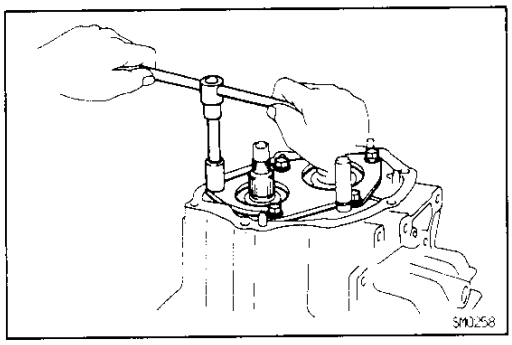

13. INSTALL REAR BEARING RETAINER

(a) Apply sealant to the bolt threads.
Sealant:
Part No.08833–00070, THREE BOND 1324 or equivalent

(b) Install and torque the 5 bolts.
Torque: 42 N·m (430 kgf·cm, 31 ft·lbf)

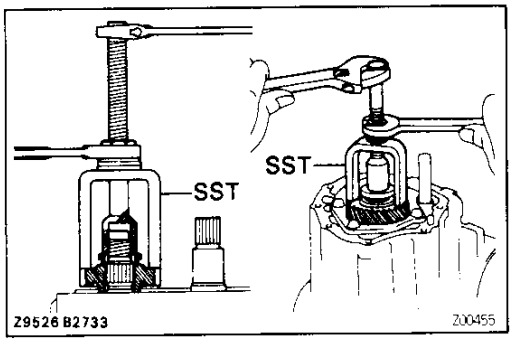

14. INSTALL 5TH DRIVEN GEAR

Using SST, install the 5th driven gear.
SST 09309–12020

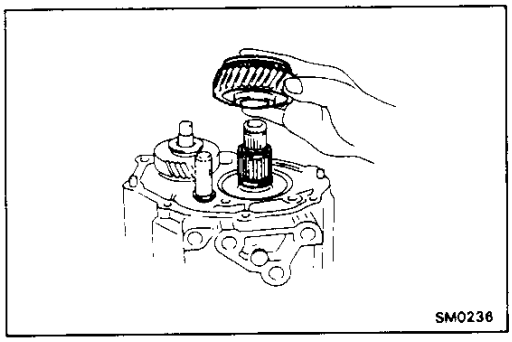

15. INSTALL SPACER, NEEDLE ROLLER BEARINGS, 5TH GEAR AND SYNCHRONIZER RING

(a) Install the spacer.
(b) Apply gear oil to the needle roller bearings.
(c) Install the 5th gear with the needle roller bearings and synchronizer ring.

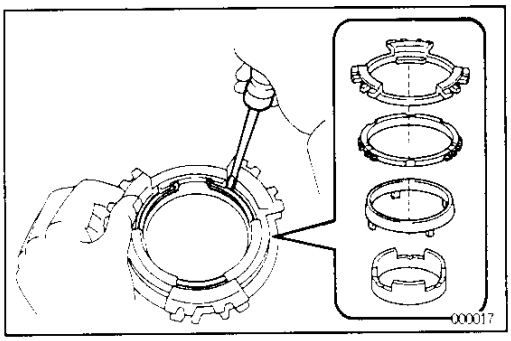

16. INSTALL NO.5 SYNCHRONIZER RINGS WITH KEY SPRING TO NO.3 CLUTCH HUB

(a) Assemble the No.5 synchronizer rings.
(b) Using a screwdriver, install the snap ring.
HINT: Wrap vinyl tape on the screwdriver to prevent damaging the synchronizer ring.

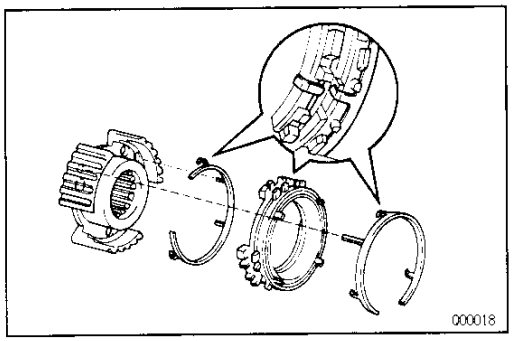

(c) Install the No.5 synchronizer rings with key springs to the No.3 clutch hub.
HINT: Align the holes of the clutch hub with key spring.

Downloaded from www.Manualslib.com manuals search engine

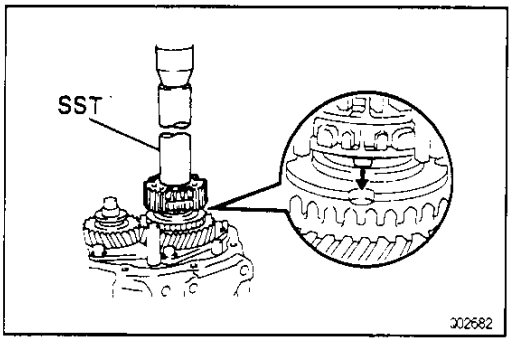

17. INSTALL NO.3 CLUTCH HUB

Using SST and a press, install the No.3 clutch hub assembly.

SST 09612–22011

NOTICE: Align the holes of the 5th gear and synchronizer ring.

MX

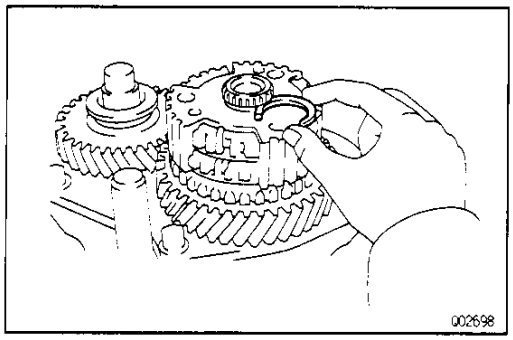

18. INSTALL SHIFTING KEY RETAINER AND SNAP RING

(a) Install the retainer.

(b) Select a snap ring that will allow minimum axial play.

Mark	Thickness mm (in.)	Mark	Thickness mm (in.)
13	2.20–2.25 (0.0866–0.0886)	21	2.60–2.65 (0.1024–0.1043)
14	2.25–2.30 (0.0886–0.0906)	22	2.65–2.70 (0.1043–0.1063)
15	2.30–2.35 (0.0906–0.0925)	23	2.70–2.75 (0.1063–0.1083)
16	2.35–2.40 (0.0925–0.0945)	24	2.75–2.80 (0.1083–0.1102)
17	2.40–2.45 (0.0945–0.0965)	25	2.80–2.85 (0.1102–0.1122)
18	2.45–2.50 (0.0965–0.0984)	26	2.85–2.90 (0.1122–0.1142)
19	2.50–2.55 (0.0984–0.1004)	27	2.90–2.95 (0.1142–0.1161)
20	2.55–2.60 (0.1004–0.1024)		

(c) Using a screwdriver and hammer, tap in the snap ring.

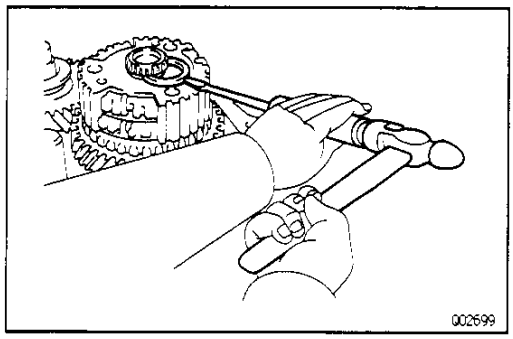

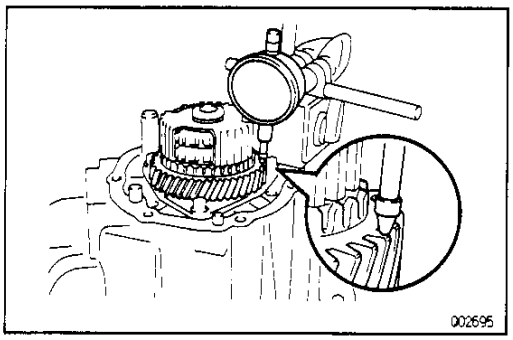

19. INSPECT 5TH GEAR THRUST CLEARANCE

Using a dial indicator, measure the thrust clearance.

Standard clearance:

0.20–0.40 mm (0.0079–0.0157 in.)

Downloaded from www.Manualslib.com manuals search engine

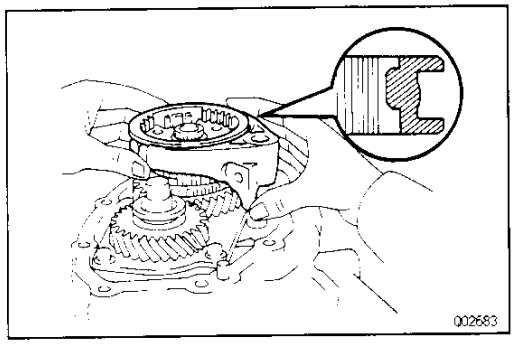

20. INSTALL NO. 3 HUB SLEEVE WITH NO. 3 SHIFT FORK

(a) Install the No.3 hub sleeve with No.3 shift fork to the No.3 clutch hub.

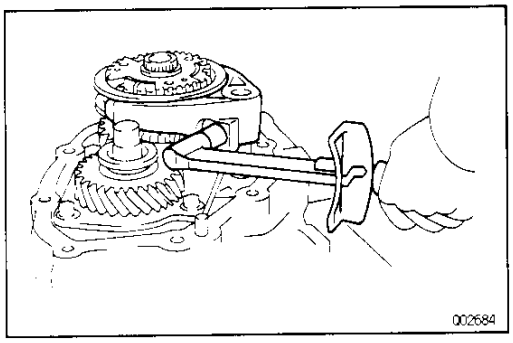

(b) Install and torque the set bolt.
Torque: 18 N·m (185 kgf·cm, 13 ft·lbf)

MX

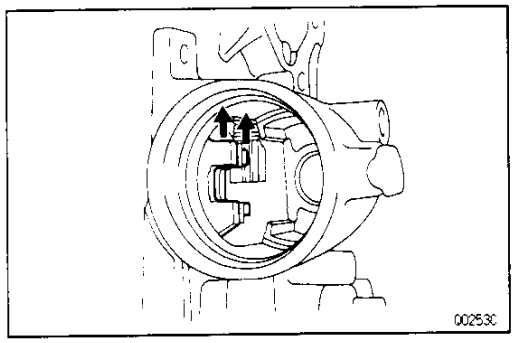

21. INSTALL OUTPUT SHAFT LOCK NUT

(a) Engage the gear double meshing.

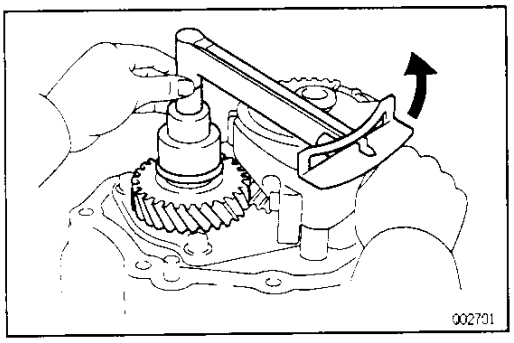

(b) Install and torque the new lock nut.
Torque: 123 N·m (1,250 kgf·cm, 90 ft·lbf)
HINT: The lock nut has LH threads.

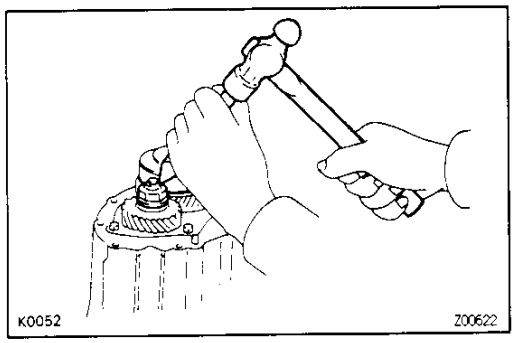

(c) Stake the lock nut.
(d) Disengage the gear double meshing.

Downloaded from www.Manualslib.com manuals search engine

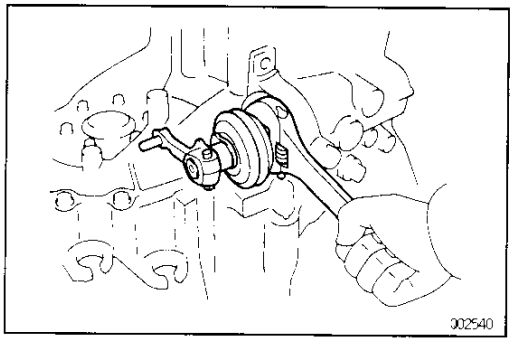

22. INSTALL SHIFT AND SELECT LEVER ASSEMBLY

(a) Apply FIPG to the underside of the flanged portion of the control shaft cover.
FIPG:
Part No.08826–00090, THREE BOND 1281 or equivalent

(b) Install the shift and select lever assembly and torque the control shaft cover.
Torque: 37 N·m (375 kgf·cm, 27 ft·lbf)

MX

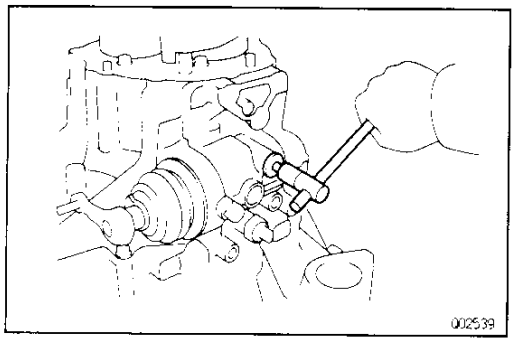

23. INSTALL PLUG

(a) Apply sealant to plug threads.
Sealant:
Part No.08833–00080, THREE BOND 1344, LOCTITE 242 or equivalent

(b) Using a hexagon wrench, install and torque the plug.
Torque: 23 N·m (230 kgf·cm, 17 ft·lbf)

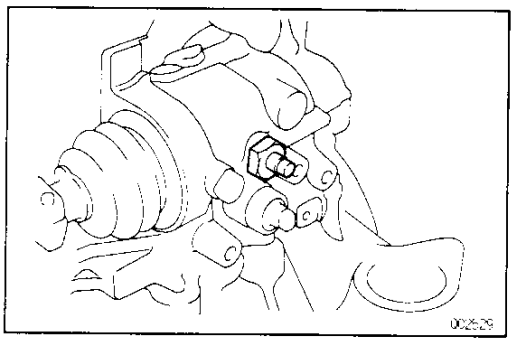

24. INSTALL LOCK BALL

Install and torque the No.1 lock ball.
Torque: 29 N·m (300 kgf·cm, 22 ft·lbf)

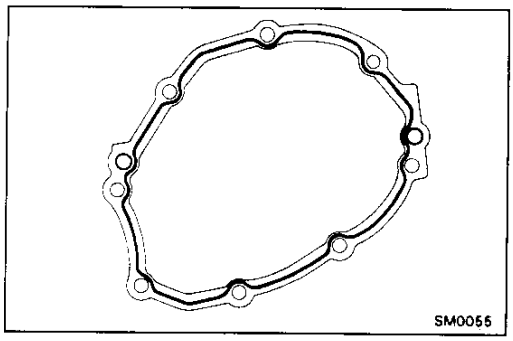

25. INSTALL TRANSMISSION CASE COVER

(a) Remove the FIPG material and be careful not to drop oil on the contacting surface of the transmission case or transmission case cover.

(b) Apply FIPG to the transmission case cover as shown.
FIPG:
Part No.08826–00090, THREE BOND 1281 or equivalent

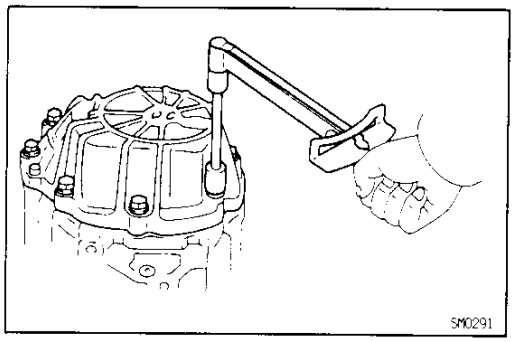

(c) Install the transmission case cover.

(d) Apply sealant to the bolt threads.
Sealant:
Part No.08833–00080, THREE BOND 1344, LOCTITE 242 or equivalent

(e) Install and torque the 8 bolts.
Torque: 29 N·m (300 kgf·cm, 22 ft·lbf)

Downloaded from www.Manualslib.com manuals search engine

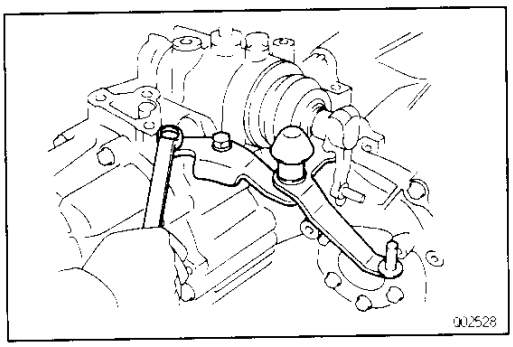

26. INSTALL SELECTING BELLCRANK AND ENGINE MOUNT BRACKET

(a) Install the selecting bellcrank and 2 bolts.
Torque: 37 N·m (380 kgf·cm, 27 ft·lbf)

(b) Install the engine mount bracket and torque the 3 bolts.
Torque: 52 N·m (530 kgf·cm, 38 ft·lbf)

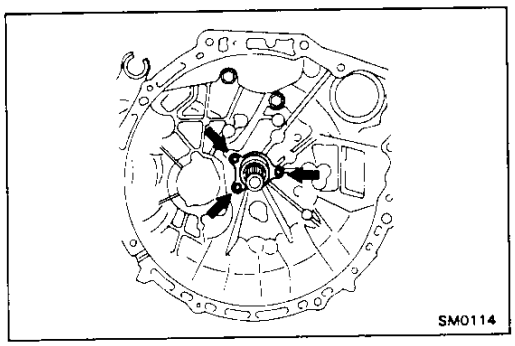

27. INSTALL RELEASE BEARING RETAINER

Install the release bearing retainer and torque the 3 bolts.
Torque: 7.4 N·m (75 kgf·cm, 65 in.·lbf)

MX

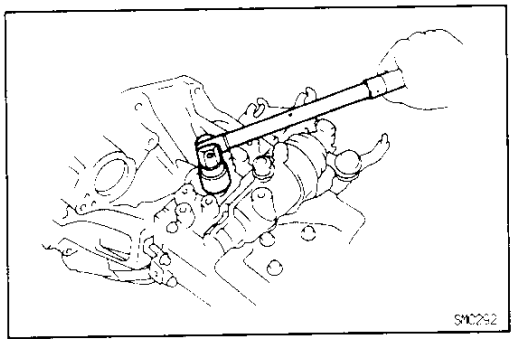

28. INSTALL BACK–UP LIGHT SWITCH
Torque: 44 N·m (450 kgf·cm, 33 ft·lbf)

29. INSTALL VEHICLE SPEED SENSOR

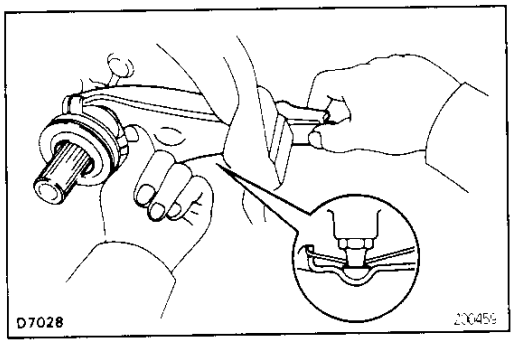

30. INSTALL RELEASE FORK AND BEARING

(a) Apply molybdenum disulphide lithium base grease to the following parts:
- **Input shaft spline**
- **Release fork contact surface**

(b) Apply MP grease to the front surface of the release bearing.

Downloaded from www.Manualslib.com manuals search engine

SHIFT LEVER AND CONTROL CABLE

MX02Y-07

COMPONENTS

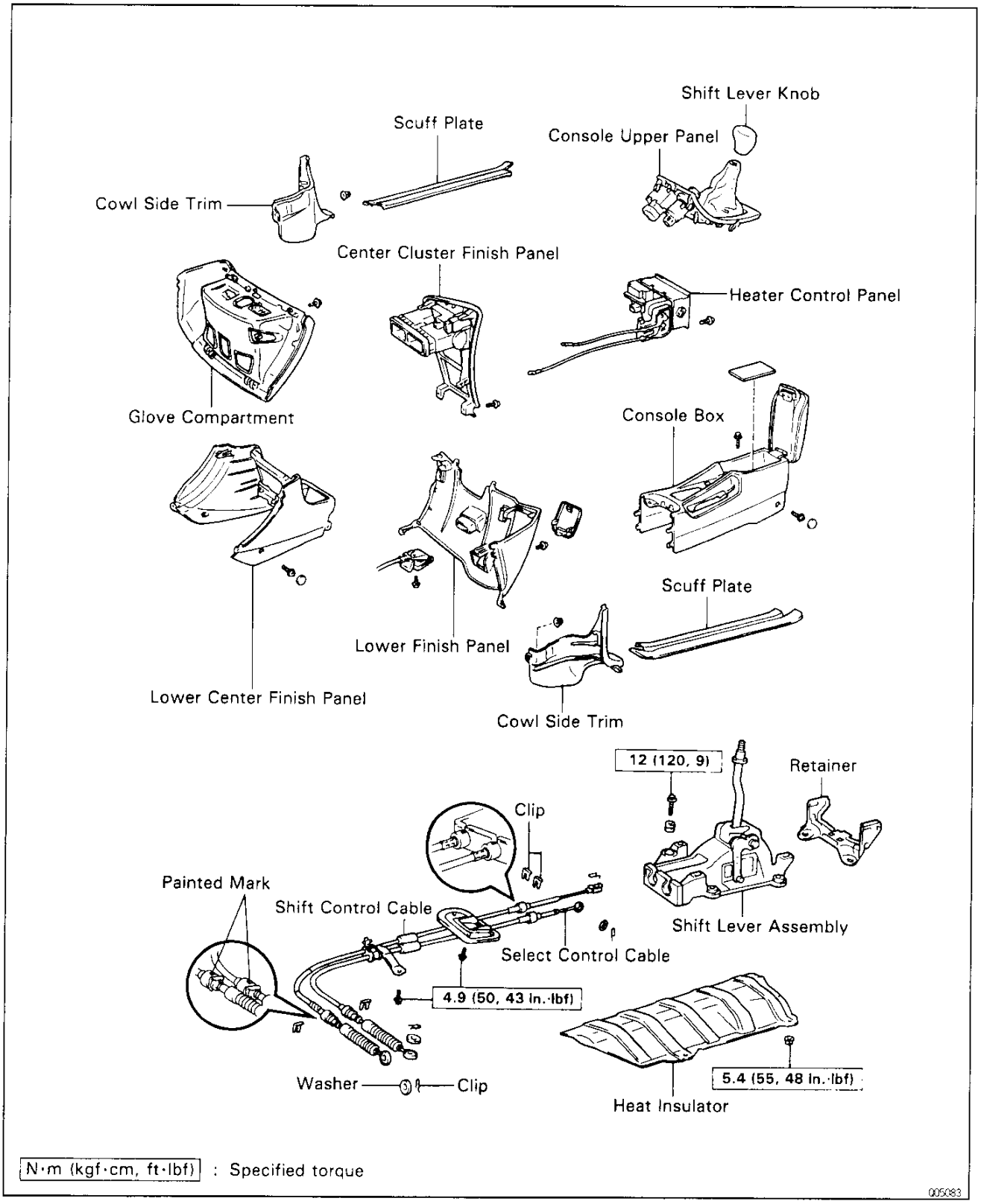

Downloaded from www.Manualslib.com manuals search engine

SERVICE SPECIFICATIONS

MX030-0C

SERVICE DATA

Input shaft		
Roller bearing joural diameter		
	Limit	29.970 mm (1.1799 in.)
3rd gear journal diameter		
	Limit	33.090 mm (1.3028 in.)
4th gear journal diameter		
	Limit	32.470 mm (1.2783 in.)
5th gear journal diameter		
	Limit	26.970 mm (1.0618 in.)
Runout		
	Limit	0.05 mm (0.0020 in.)
Output shaft		
Roller bearing journal diameter		
	Limit	31.970 mm (1.2587 in.)
1st gear journal diameter		
	Limit	37.970 mm (1.4949 in.)
2nd gear journal diameter		
	Limit	31.990 mm (1.2594 in.)
Runout		
	Limit	0.05 mm (0.0020 in.)
Gear thrust clearance 1st		
	STD	0.10–0.29 mm (0.0039–0.0114 in.)
	Limit	0.35 mm (0.0138 in.)
Gear thrust clearance 2nd		
	STD	0.20–0.44 mm (0.0079–0.0173 in.)
	Limit	0.50 mm (0.0197 in.)
Gear thrust clearance 3rd		
	STD	0.10–0.25 mm (0.0039–0.0098 in.)
	Limit	0.30 mm (0.0118 in.)
Gear thrust clearance 4th		
	STD	0.20–0.45 mm (0.0079–0.0177 in.)
	Limit	0.50 mm (0.0197 in.)
Gear thrust clearance 5th		
	STD	0.20–0.40 mm (0.0079–0.0157 in.)
	Limit	0.45 mm (0.0177 in.)
Gear radial clearance 1st, 2nd, 3rd and 4th		
	STD	0.009–0.053 mm (0.0004–0.0021 in.)
	Limit	0.070 mm (0.0028 in.)
Gear radial clearance 5th		
	STD	0.009–0.050 mm (0.0004–0.0020 in.)
	Limit	0.070 mm (0.0028 in.)
Shift fork to hub sleeve clearance		
	Limit	1.0 mm (0.039 in.)
Synchronizer ring to gear clearance 1st, 3rd and 4th		
	Limit	0.6 mm (0.024 in.)

MX

Downloaded from www.Manualslib.com manuals search engine

MX

Synchronizer ring to gear clearance 2nd		
Limit		0.7 mm (0.028 in.)
Input shaft snap ring thickness		
No.2 clutch hub	Mark 1	1.95–2.00 mm (0.0768–0.0787 in.)
No.2 clutch hub	Mark 2	2.00–2.05 mm (0.0787–0.0807 in.)
No.2 clutch hub	Mark 3	2.05–2.10 mm (0.0807–0.0827 in.)
No.2 clutch hub	Mark 4	2.10–2.15 mm (0.0827–0.0846 in.)
No.2 clutch hub	Mark 5	2.15–2.20 mm (0.0846–0.0866 in.)
No.2 clutch hub	Mark 6	2.20–2.25 mm (0.0866–0.0886 in.)
No.3 clutch hub	Mark 13	2.20–2.25 mm (0.0866–0.0886 in.)
No.3 clutch hub	Mark 14	2.25–2.30 mm (0.0886–0.0906 in.)
No.3 clutch hub	Mark 15	2.30–2.35 mm (0.0906–0.0925 in.)
No.3 clutch hub	Mark 16	2.35–2.40 mm (0.0925–0.0945 in.)
No.3 clutch hub	Mark 17	2.40–2.45 mm (0.0945–0.0965 in.)
No.3 clutch hub	Mark 18	2.45–2.50 mm (0.0965–0.0984 in.)
No.3 clutch hub	Mark 19	2.50–2.55 mm (0.0984–0.1004 in.)
No.3 clutch hub	Mark 20	2.55–2.60 mm (0.1004–0.1024 in.)
No.3 clutch hub	Mark 21	2.60–2.65 mm (0.1024–0.1043 in.)
No.3 clutch hub	Mark 22	2.65–2.70 mm (0.1043–0.1063 in.)
No.3 clutch hub	Mark 23	2.70–2.75 mm (0.1063–0.1083 in.)
No.3 clutch hub	Mark 24	2.75–2.80 mm (0.1083–0.1102 in.)
No.3 clutch hub	Mark 25	2.80–2.85 mm (0.1102–0.1122 in.)
No.3 clutch hub	Mark 26	2.85–2.90 mm (0.1122–0.1142 in.)
No.3 clutch hub	Mark 27	2.90–2.95 mm (0.1142–0.1161 in.)
Rear bearing		
	Mark A	2.15–2.20 mm (0.0846–0.0866 in.)
	Mark B	2.20–2.25 mm (0.0866–0.0886 in.)
	Mark C	2.25–2.30 mm (0.0886–0.0906 in.)
	Mark D	2.30–2.35 mm (0.0906–0.0925 in.)
	Mark E	2.35–2.40 mm (0.0925–0.0945 in.)
Differential side bearing adjusting shim thickness		
	Mark 1	1.90 mm (0.0748 in.)
	Mark 2	1.95 mm (0.0768 in.)
	Mark 3	2.00 mm (0.0787 in.)
	Mark 4	2.05 mm (0.0807 in.)
	Mark 5	2.10 mm (0.0827 in.)
	Mark 6	2.15 mm (0.0846 in.)
	Mark 7	2.20 mm (0.0866 in.)
	Mark 8	2.25 mm (0.0886 in.)
	Mark 9	2.30 mm (0.0906 in.)
	Mark 10	2.35 mm (0.0925 in.)
	Mark 11	2.40 mm (0.0945 in.)
	Mark 12	2.45 mm (0.0965 in.)
	Mark 13	2.50 mm (0.0984 in.)
	Mark 14	2.55 mm (0.1004 in.)
	Mark 15	2.60 mm (0.1024 in.)
	Mark 16	2.65 mm (0.1043 in.)
	Mark 17	2.70 mm (0.1063 in.)

Downloaded from www.Manualslib.com manuals search engine

Mark 18	2.75 mm (0.1083 in.)
Mark 19	2.80 mm (0.1102 in.)
Shift lever preload adjusting shim thickness	
Mark A	0.5 mm (0.020 in.)
Mark B	0.6 mm (0.024 in.)
Mark C	0.7 mm (0.028 in.)
Mark D	0.8 mm (0.031 in.)
Mark E	0.9 mm (0.035 in.)
Mark F	1.0 mm (0.039 in.)
Mark G	1.1 mm (0.043 in.)
Mark H	1.2 mm (0.047 in.)
Mark J	1.3 mm (0.051 in.)
Mark K	1.4 mm (0.055 in.)
Mark L	1.5 mm (0.059 in.)
Mark M	1.6 mm (0.063 in.)
Mark N	1.7 mm (0.067 in.)
Differential case side bearing preload (at starting)	0.8 – 1.6 N·m (8 – 16 kgf·cm, 6.9 – 13.9 in.·lbf)
Differential pinion to side gear backlash	0.05 – 0.20 mm (0.0020 – 0.0079 in.)
Differential side gear thrust washer thickness	
None Mark	0.95 mm (0.0374 in.)
None Mark	1.00 mm (0.0394 in.)
None Mark	1.05 mm (0.0413 in.)
None Mark	1.10 mm (0.0433 in.)
None Mark	1.15 mm (0.0453 in.)
None Mark	1.20 mm (0.0472 in.)

Downloaded from www.Manualslib.com manuals search engine

MX031-0B

TORQUE SPECIFICATIONS

Part tightened	N·m	kgf·cm	ft·lbf
Transmission case x Transaxle case	29	300	22
Transmission case x Case cover	29	300	22
Transmission case protector	18	185	13
Rear bearing retainer	21	210	15
Output shaft front bearing lock plate	18	185	13
Transaxle case oil receiver	7.4	75	65 in.·lbf
5th driven gear lock nut	123	1,250	90
Reverse idler shaft lock bolt	29	300	22
Control shaft cover	37	375	27
Control shift lever x lever shaft	6.4	65	56 in.·lbf
Ring gear x Differential case	97	985	71
Selecting bellcrank x Transmission case	37	380	27
Reverse shift arm bracket	18	185	13
No.3 shift fork x Shift fork shaft	18	185	13
No.1 lock ball assembly	29	300	22
No.2 lock ball assembly	23	230	17
Filler plug	49	500	36
Drain plug	49	500	36
Back—up light switch	44	450	33
Side bearing retainer	18	185	13
Clutch release bearing retainer	7.4	75	65 in.·lbf
Straight screw plug (Shift fork shaft)	13	130	9
Straight screw plug (Reverse restrict pin)	13	130	9
Straight screw plug (Shift and select lever shaft)	23	230	17
Transaxle x Engine (12mm bolt)	64	650	47
Transaxle x Engine (10mm bolt)	46	470	34
Stiffener plate x Engine	43	440	32
Stiffener plate x Transaxle	21	210	15
Exhaust pipe support bracket	19	195	14
Engine left mounting set bolt and nut	64	650	47
Center member x Body	52	530	38
Center member x Engine Mounting	64	650	47
Transaxle x Engine mounting	77	790	57
Engine mounting through bolt	87	890	64
Front exhaust pipe (Bolt)	43	440	32
Front exhaust pipe (Nut)	62	630	46
Ground cable set bolt	21	210	15
Clutch release cylinder x Transaxle	12	120	9
Starter x Transaxle	39	400	29

Downloaded from www.Manualslib.com manuals search engine

E56 MANUAL TRANSAXLE

DESCRIPTION ..... MX– 2
OPERATION ..... MX– 3
PREPARATION ..... MX– 4
TROUBLESHOOTING ..... MX– 7
PRECAUTION ..... MX– 7
ASSEMBLY REMOVAL
AND INSTALLATION ..... MX– 8
COMPONENT PARTS REMOVAL ..... MX– 17
INPUT SHAFT ..... MX– 34
OUTPUT SHAFT ..... MX– 40
OIL PUMP ..... MX– 47
SHIFT AND SELECT LEVER SHAFT ..... MX– 52
DIFFERENTIAL CASE ..... MX– 58
COMPONENT PARTS INSTALLATION ..... MX– 70
SHIFT LEVER AND CONTROL CABLE ..... MX– 83
SERVICE SPECIFICATIONS ..... MX– 84

Downloaded from www.Manualslib.com manuals search engine

DESCRIPTION

GENERAL

MX01R-0R

- A triple–cone type synchromesh mechanism is used in the 2nd gear and a double–cone type synchromesh mechanism is used in the 3rd gear to improve the shift feeling characteristics. This helps to reduce the shifting effort.
- A reverse synchromesh mechanism is used to suppress gear engagement noise in reverse gear shifting.

MX

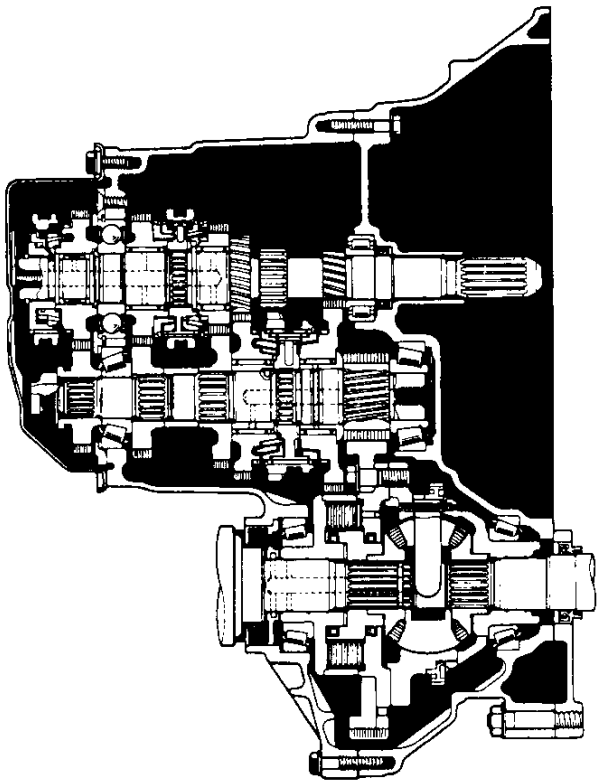

Q05580

V05390

Type of Transaxle		E56
Type of Engine		3S–GE
Gear Ratio	1st Gear	3.538
	2nd Gear	2.045
	3rd Gear	1.333
	4th Gear	1.028
	5th Gear	0.820
	Reverse Gear	3.583
Differntial Gear Ratio		3.944
Oil Capacity		3.5 liters (3.7 US qts, 3.1 Imp. qts)
Oil Viscosity		SAE 75W–90
Oil Grade		API GL–3, GL–4 or GL–5

Downloaded from www.Manualslib.com manuals search engine

OPERATION

MX00E-02

- The illustrations below show the engagements of transaxle gears.

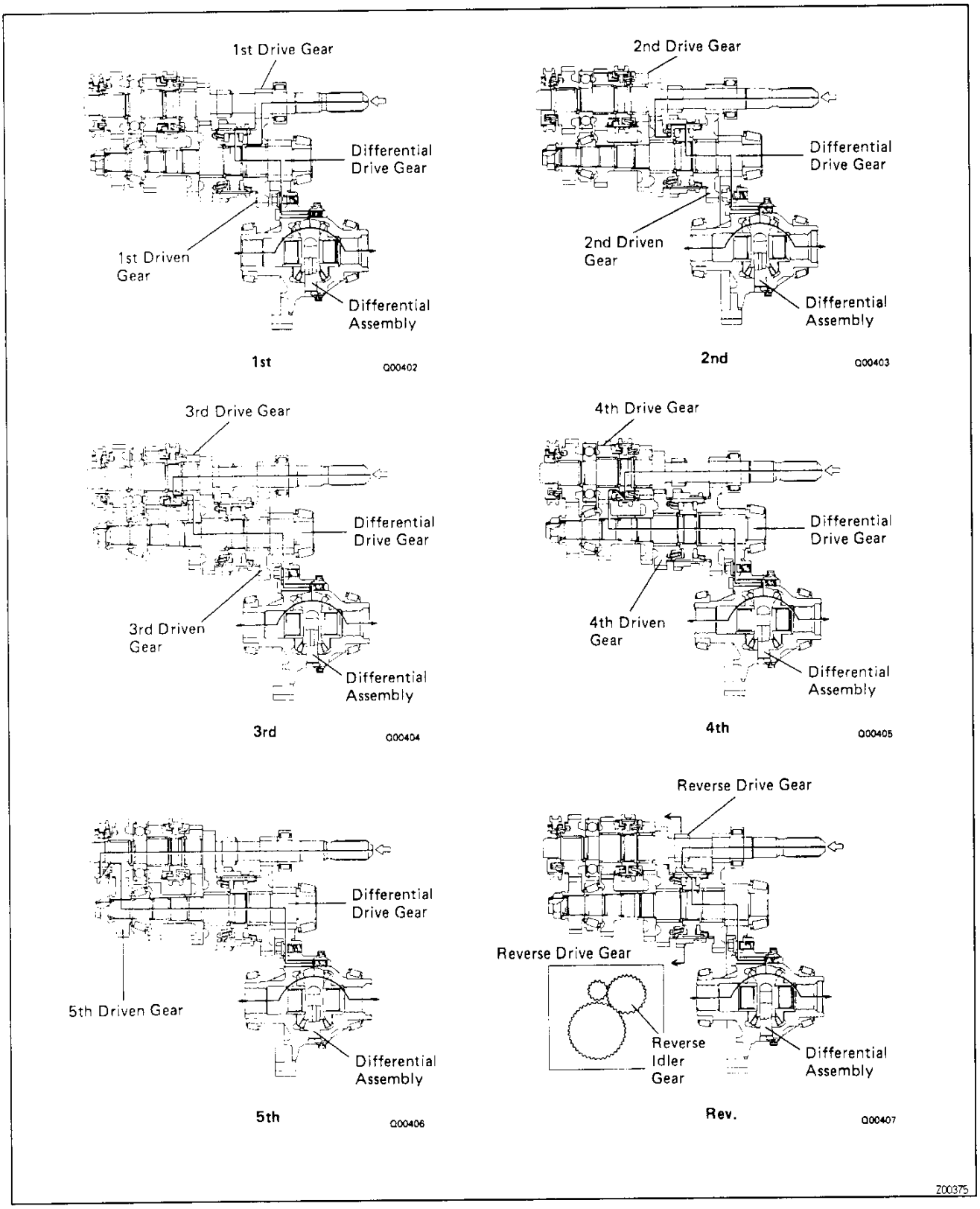

MX

Downloaded from www.Manualslib.com manuals search engine

PREPARATION

SST(SPECIAL SERVICE TOOLS)

MX018-04

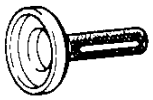	09223–15010 Crankshaft Rear Oil Seal Replacer	Differential case oil seal
	09308–00010 Oil Seal Puller	
	09316–20011 Transfer Bearing Replacer	Input shaft bearing Side bearing
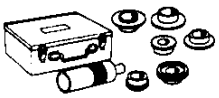	09316–60010 Transmission & Transfer Bearing Replacer	No.1 hub sleeve Differential case taper roller bearing outer race Transaxle case cover oil seal
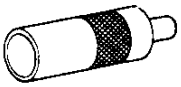	(09316–00010) Replacer Pipe	
	(09316–00020) Replacer "A"	
	(09316–00040) Replacer "C"	
	(09316–00070) Replacer "F"	
	09506–30012 Differential Drive Pinion Rear Bearing Cone Replacer	Output shaft rear bearing
	09506–35010 Differential Drive Pinion Rear Bearing Replacer	No.2 hub sleeve Side bearing Input shaft bearing
	09608–12010 Front Hub & Drive Pinion Bearing Replacer Set	Input shaft oil seal
	(09608–00020) Remover & Replacer Handle	
	(09608–00060) Drive Pinion Front Bearing Cup Replacer	

Downloaded from www.Manualslib.com manuals search engine

	(09608–00080)	Replacer	
	09612–65014	Steering Worm Bearing Puller	Input shaft bearing Differential taper roller bearing outer race
	09620–30010	Steering Gear Box Replacer Set	Control shaft cover oil seal
	(09627–30010)	Steering Sector Shaft Bushing Replacer	
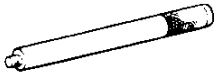	(09631–00020)	Handle	
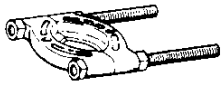	09950–00020	Bearing Remover	
	09950–00030	Bearing Remover Attachment	
	09950–30010	Puller A Set	
	09950–40010	Puller B Set	

MX01T–01

RECOMMENDED TOOLS

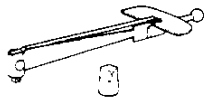	09025–00010	Small Torque Wrench	Differential preload
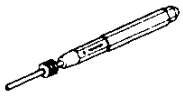	09031–00030	Pin Punch	
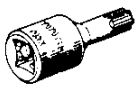	09042–00040	Torx Socket T50	
	09042–00050	Torx Socket T45	

Downloaded from www.Manualslib.com manuals search engine

	09905-00012 Snap Ring No. 1 Expander	

EQUIPMENT

MX01U-01

Dial indicator with magnetic base	
Feeler gauge	
Micrometer	
Straight edge	
Torque wrench	

MX

LUBRICANT

MX01B-08

Item	Capacity	Classification
Manual transaxle oil (w/Differential oil)	3.5 liters (3.7 US qts, 3.1 Imp. qts)	API GL-3, GL-4 or GL-5 SAE 75W-90 or 80W-90

SSM(SPECIAL SERVICE MATERIALS)

MX01V-04

08826-00090	Seal Packing 1281, THREE BOND 1281 or equivalent (FIPG)	Transaxle case x Case cover Transmission case x Transaxle case Transmission case x Case cover
08833-00080	Adhesive 1344, THREE BOND 1344, LOCTITE 242 or equivalent	Transaxle case cover bolt Straight screw plug Control shaft cover bolt

Downloaded from www.Manualslib.com manuals search engine

TROUBLESHOOTING

MX02A–0F

Use the table below to help you find the cause of the problem. The numbers indicate the priority of the likely cause of the problem. Check each part in order. If necessary, replace these parts.

See Page	–	MX-2	–	MX-17	MX-17	MX-17	MX-83	MX-17	MX-17	MX-17	MX-17	MX-34, 40	MX-34, 40			
Parts Name / Trouble	Oil (Level low)	Oil (Wrong)	Oil (Level too high)	Gasket (Damaged)	Oil seal (Worn or damaged)	O-Ring (Worn or damaged)	Control cable (Faulty)	Locking ball spring (Damaged)	Shift fork (Worn)	Gear (Worn or damaged)	Bearing (Worn or damaged)	Synchronizer ring (Worn or damaged)	Shifting key spring (Damaged)			
Noise	1	2								3	3					
Oil leakage			1	2	2	3										
Hard to shift or will not shift							1					2	3			
Jumps out of gear								1	2	3	3					

V00310

PRECAUTION

MX022–0E

When working with FIPG material, you must observe the following.

- Using a razor blade and gasket scraper, remove all the old FIPG material from the gasket surfaces.
- Thoroughly clean all components to remove all the loose material.
- Clean both sealing surfaces with a non–residue solvent.
- Apply the FIPG in an approx. 1 mm (0.04 in.) wide bead along the sealing surface.
- Parts must be assembled within 10 minutes of application. Otherwise, the FIPG material must be removed and reapplied.

MX

Downloaded from www.Manualslib.com manuals search engine

ASSEMBLY REMOVAL AND INSTALLATION

MX07T-02

Remove and install the parts as shown below.

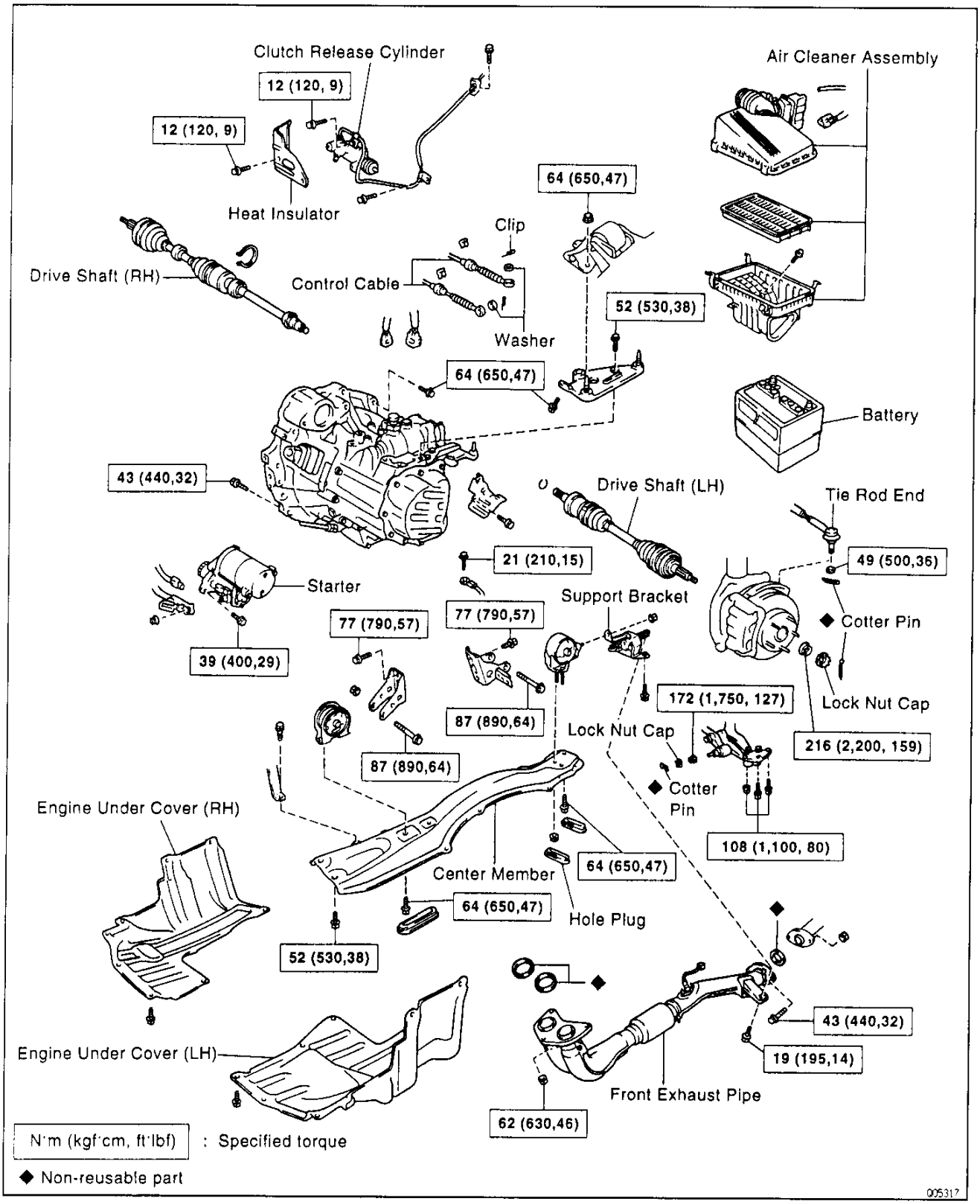

Downloaded from www.Manualslib.com manuals search engine

MX088-01

TRANSAXLE REMOVAL

1. **DISCONNECT NEGATIVE (–) TERMINAL CABLE FROM BATTERY**

   CAUTION: Work must be started after 90 seconds from the time the ignition switch is turned to the "LOCK" position and the negative (–) terminal cable is disconnected from the battery.

2. **REMOVE BATTERY AND AIR CLEANER CASE ASSEMBLY WITH AIR HOSE**

3. **REMOVE STARTER**

(a) Disconnect the connector and wire from the starter.

(b) Remove the 2 bolts and starter.

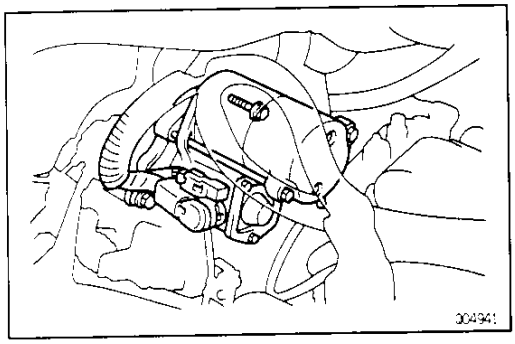

4. **REMOVE CLUTCH RELEASE CYLINDER AND TUBE CLAMPS**

(a) Remove the 2 bolts and heat insulator.

(b) Remove the 2 bolts and release cylinder.

(c) Remove the 2 bolts and 2 tube clamps.

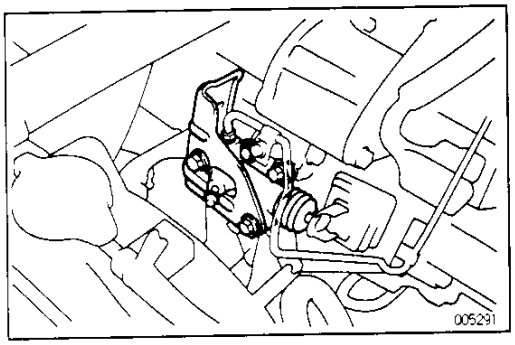

5. **REMOVE GROUND CABLE**

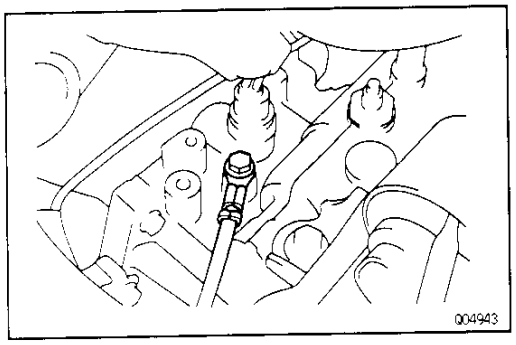

6. **DISCONNECT BACK–UP LIGHT SWITCH CONNECTOR**

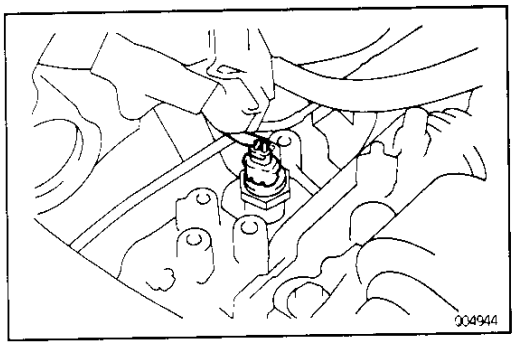

MX

Downloaded from www.Manualslib.com manuals search engine

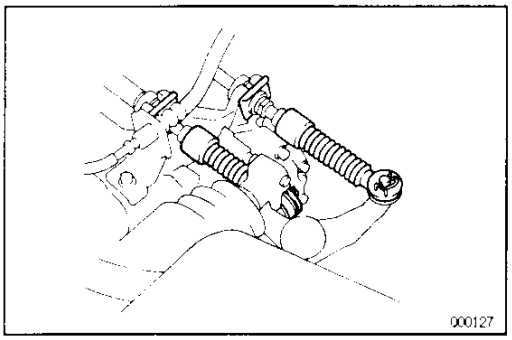

7. DISCONNECT CONTROL CABLES

(a) Remove the 2 clips and washers.

(b) Remove the 2 clips from the cables.

MX

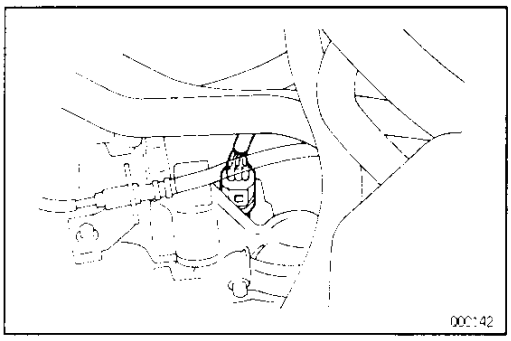

8. DISCONNECT VEHICLE SPEED SENSOR CONNECTOR

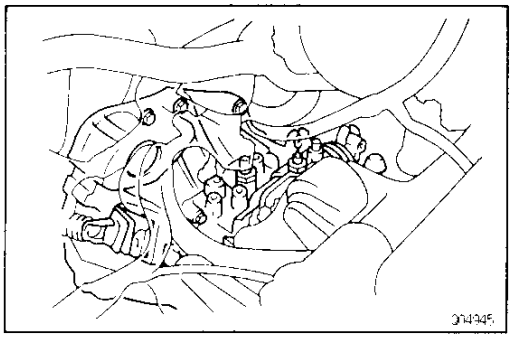

9. REMOVE TRANSAXLE MOUNTING BOLTS

Remove the 4 bolts of transaxle case upper side.

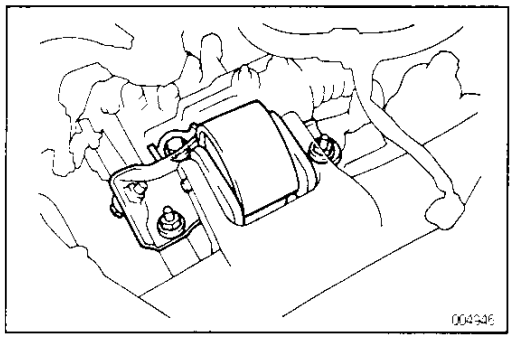

10. REMOVE ENGINE LEFT MOUNTING BOLT AND NUTS

Remove the bolt and 2 nuts of engine left mounting upper side.

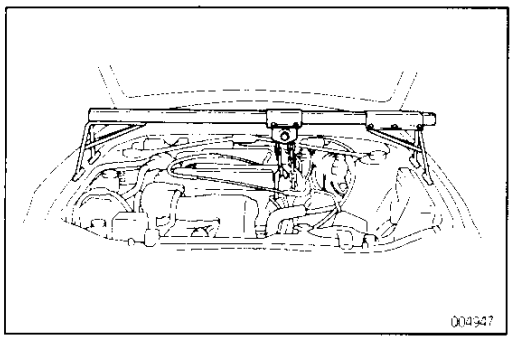

11. INSTALL ENGINE SUPPORT FIXTURE

Downloaded from www.Manualslib.com manuals search engine

12. REMOVE FRONT WHEEL

13. RAISE VEHICLE

NOTICE: Be sure the vehicle is securely supported.

14. REMOVE UNDER COVERS

15. DRAIN TRANSAXLE OIL

16. REMOVE LH AND RH DRIVE SHAFTS

(See page SA–42)

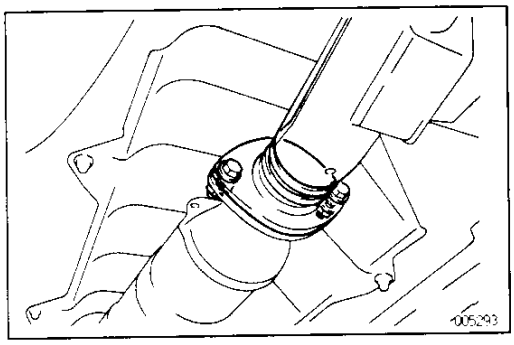

17. REMOVE FRONT EXHAUST PIPE

(a) Remove the 2 nuts and 2 bolts.

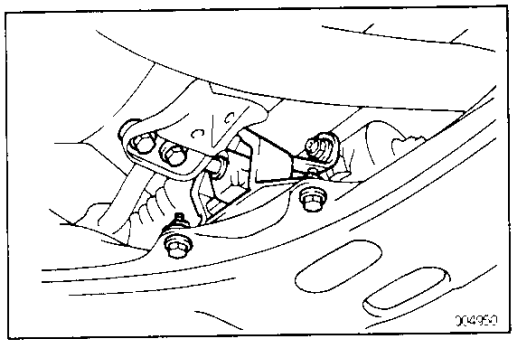

(b) Remove the nut, 4 bolts and exhaust pipe support bracket.

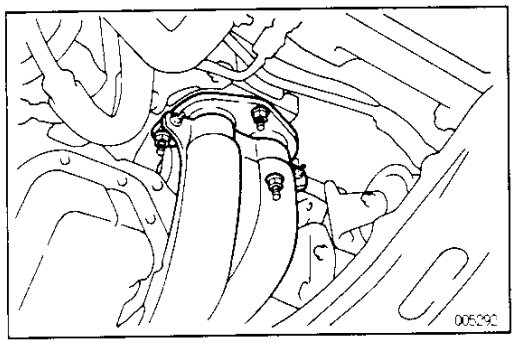

(c) Remove the 3 nuts and exhaust front pipe with the 2 gaskets.

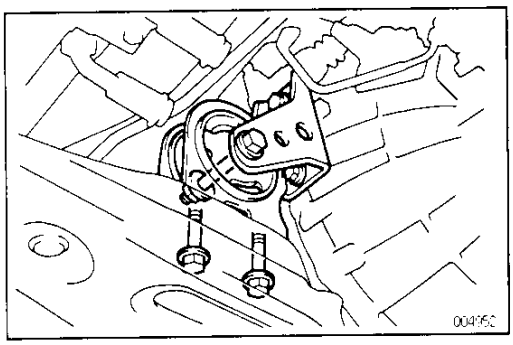

18. REMOVE ENGINE FRONT MOUNTING

(a) Remove the hole plug.

(b) Remove the nut and bolt.

(c) Remove the 4 bolts and engine front mounting.

Downloaded from www.Manualslib.com manuals search engine

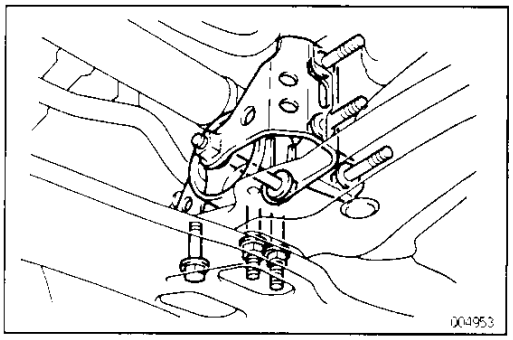

19. REMOVE ENGINE REAR MOUNTING

(a) Remove the 2 hole plugs.
(b) Remove the through bolt.
(c) Remove the 4 bolts, 2 nuts and engine rear mounting.

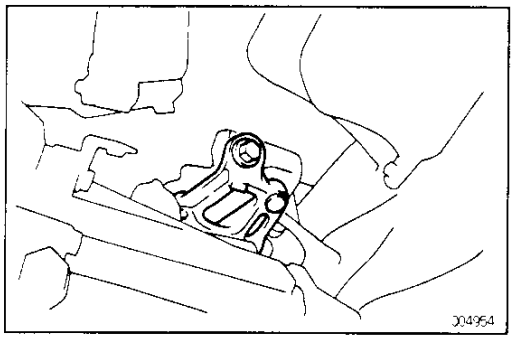

20. REMOVE ENGINE LEFT MOUNTING BOLT

Remove the bolt of engine left mounting lower side.

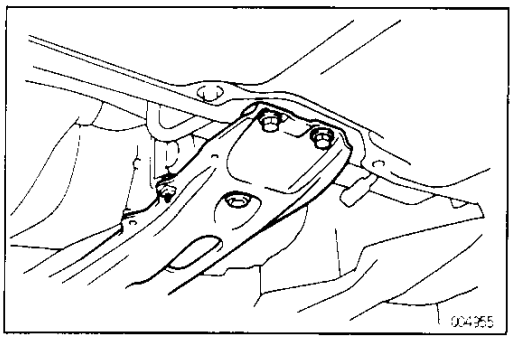

21. REMOVE CENTER MEMBER

(a) Remove the bolt and pipe bracket.
(b) Remove the 2 bolts and center member.

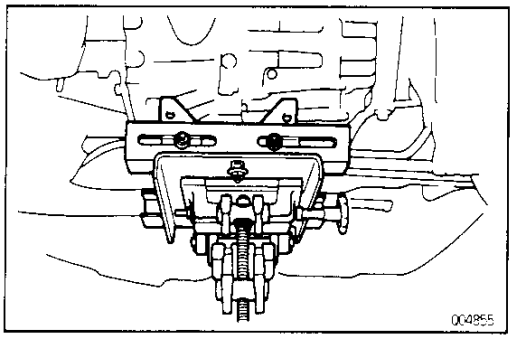

22. JACK UP TRANSAXLE SLIGHTLY

Using a transmission jack, support the transaxle.

23. REMOVE TRANSAXLE

(a) Remove the transaxle mounting bolts.
(b) Lower the engine left side and remove the transaxle from the engine.

Downloaded from www.Manualslib.com manuals search engine

MX089-01

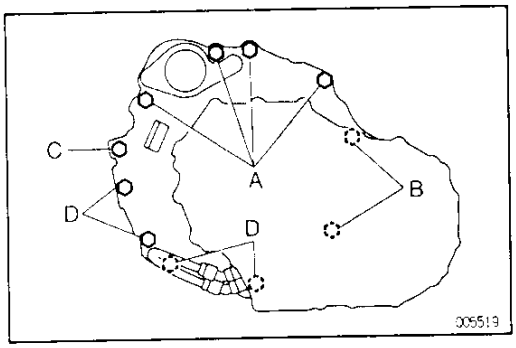

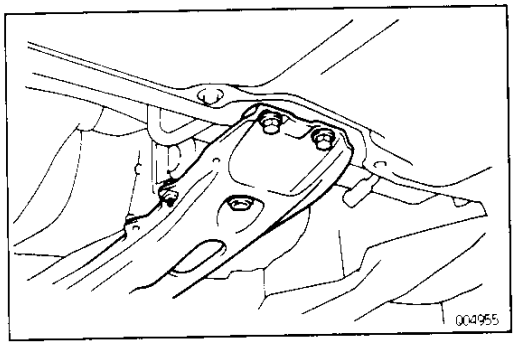

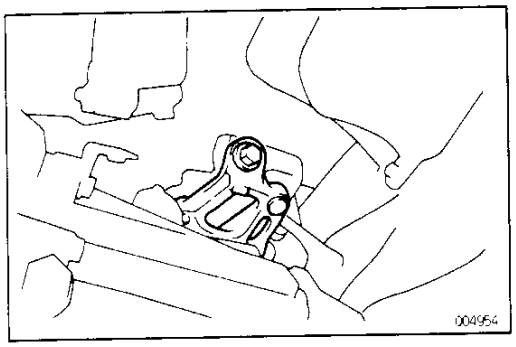

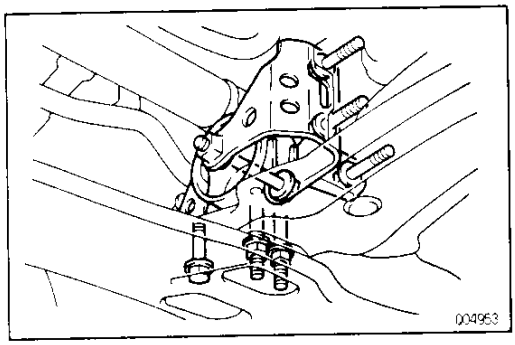

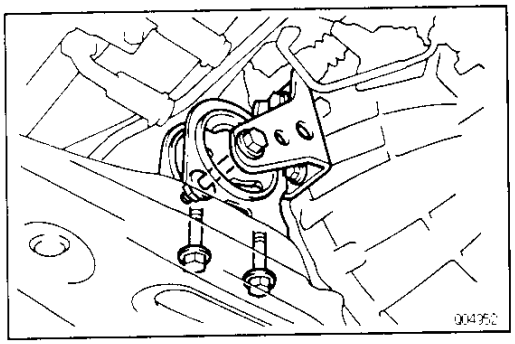

TRANSAXLE INSTALLATION

(See page MX–8)

1. INSTALL TRANSAXLE TO ENGINE

Align the input shaft spline with the clutch disc and install the transaxle to engine.

Bolt A

Torque: 64 N·m (650 kgf·cm, 47 ft·lbf)

Bolt B

Torque: 46 N·m (470 kgf·cm, 34 ft·lbf)

Bolt C

Torque: 21 N·m (210 kgf·cm, 15 ft·lbf)

Bolt D

Torque: 43 N·m (440 kgf·cm, 32 ft·lbf)

MX

2. INSTALL CENTER MEMBER

(a) Install the center member and torque the 2 bolts.

Torque: 52 N·m (530 kgf·cm, 38 ft·lbf)

(b) Install the pipe bracket with a bolt.

3. INSTALL ENGINE LEFT MOUNTING BOLT

Torque the bolt of engine left mounting lower side.

Torque: 64 N·m (650 kgf·cm, 47 ft·lbf)

4. INSTALL ENGINE REAR MOUNTING

(a) Install the engine rear mounting, torque the 4 bolts and 2 nuts.

Transaxle side:

Torque: 77 N·m (790 kgf·cm, 57 ft·lbf)

Center member side:

Torque: 64 N·m (650 kgf·cm, 47 ft·lbf)

Through bolt:

Torque: 87 N·m (890 kgf·cm, 64 ft·lbf)

(b) Install the 2 hole plugs.

5. INSTALL ENGINE FRONT MOUNTING

(a) Install the engine front mounting and torque the 4 bolts.

Transaxle side:

Torque: 77 N·m (790 kgf·cm, 57 ft·lbf)

Center member side:

Torque: 64 N·m (650 kgf·cm, 47 ft·lbf)

Through bolt:

Torque: 87 N·m (890 kgf·cm, 64 ft·lbf)

(b) Install the hole plug.

Downloaded from www.Manualslib.com manuals search engine

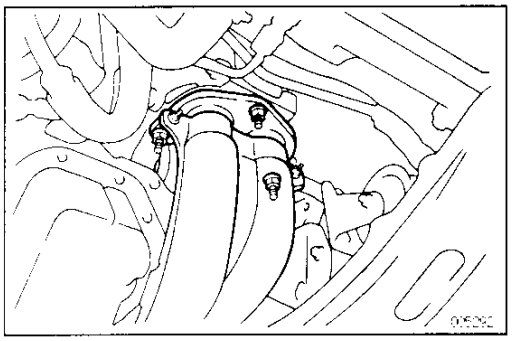

6. INSTALL FRONT EXHAUST PIPE

(a) Install the front exhaust pipe with 2 new gaskets and torque the 3 nuts.
Torque: 62 N·m (630 kgf·cm, 46 ft·lbf)

MX

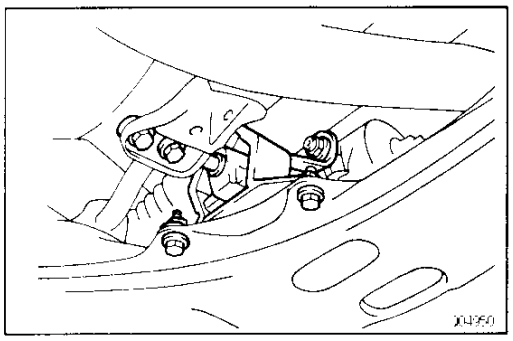

(b) Install the exhaust pipe support bracket, torque the nut and 4 bolts.
Torque: 19 N·m (195 kgf·cm, 14 ft·lbf)

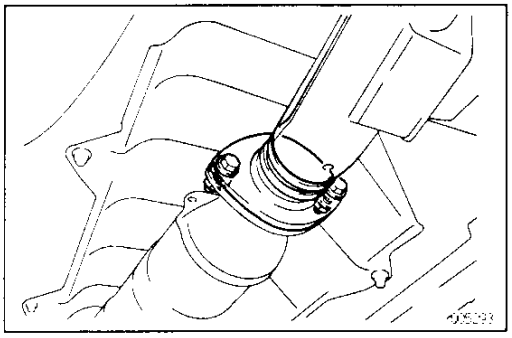

(c) Install a new gasket, torque the 2 bolts and 2 nuts.
Torque: 43 N·m (440 kgf·cm, 32 ft·lbf)

7. INSTALL LH AND RH DRIVE SHAFTS
(See page SA—54)

8. FILL TRANSAXLE WITH GEAR OIL

Oil grade:
API GL—3, GL—4 or GL—5

Viscosity:
SAE 75W—90
Above —18°C (0°F) SAE 90
Below —18°C (0°F) SAE 75W

Capacity:
3.5 liters (3.7 US qts, 3.1 Imp.qts)

9. INSTALL UNDER COVERS

10. INSTALL FRONT WHEEL AND LOWER VEHICLE

11. REMOVE ENGINE SUPPORT FIXTURE

Downloaded from www.Manualslib.com manuals search engine

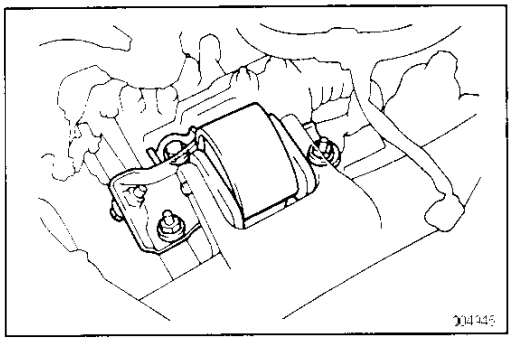

12. INSTALL ENGINE LEFT MOUNTING BOLT AND NUTS

Torque the bolt and 2 nuts of engine left mounting upper side.

Torque: 64 N·m (650 kgf·cm, 47 ft·lbf)

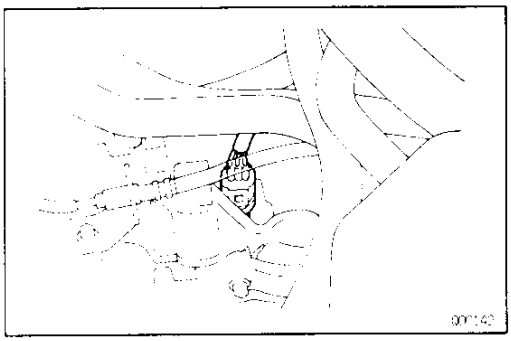

13. CONNECT VEHICLE SPEED SENSOR CONNECTOR

MX

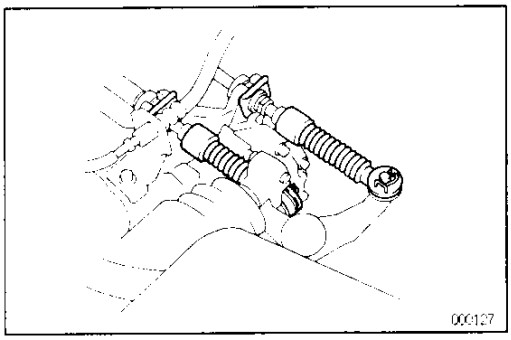

14. CONNECT CONTROL CABLES

(a) Install the 2 clips to the cables.

(b) Connect the 2 cables to the linkage with washers and clips.

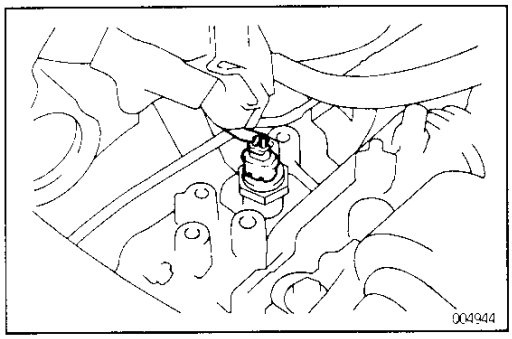

15. CONNECT BACK – UP LIGHT SWITCH CONNECTOR

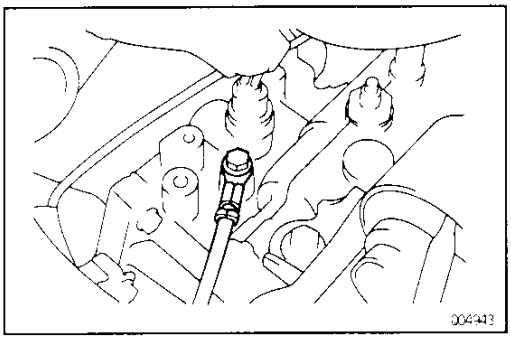

16. INSTALL GROUND CABLE

Torque: 21 N·m (210 kgf·cm, 15 ft·lbf)

Downloaded from www.Manualslib.com manuals search engine

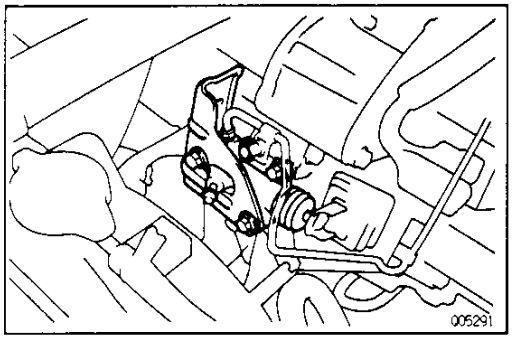

17. INSTALL CLUTCH RELEASE CYLINDER AND TUBE CLAMPS

(a) Install the 2 tube clamps and torque the 2 bolts.

(b) Install the release cylinder and torque the 2 bolts.
Torque: 12 N·m (120 kgf·cm, 9 ft·lbf)

(c) Install the heat insulator and torque the 2 bolts.
Torque: 12 N·m (120 kgf·cm, 9 ft·lbf)

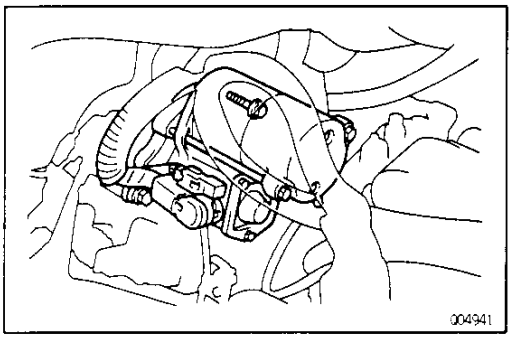

MX

18. INSTALL STARTER

(a) Install the starter and torque the 2 bolts.
Torque: 39 N·m (400 kgf·cm, 29 ft·lbf)

(b) Connect the connector and wire to the starter.

19. INSTALL AIR CLEANER CASE ASSEMBLY WITH AIR HOSE AND BATTERY

20. CONNECT NEGATIVE (–) TERMINAL CABLE TO BATTERY

21. INSPECT FRONT WHEEL ALIGNMENT
(See page SA–5)

22. PERFORM ROAD TEST
Check for abnormal noises and smooth shifting.

Downloaded from www.Manualslib.com manuals search engine

COMPONENT PARTS REMOVAL

MX614-08

COMPONENTS

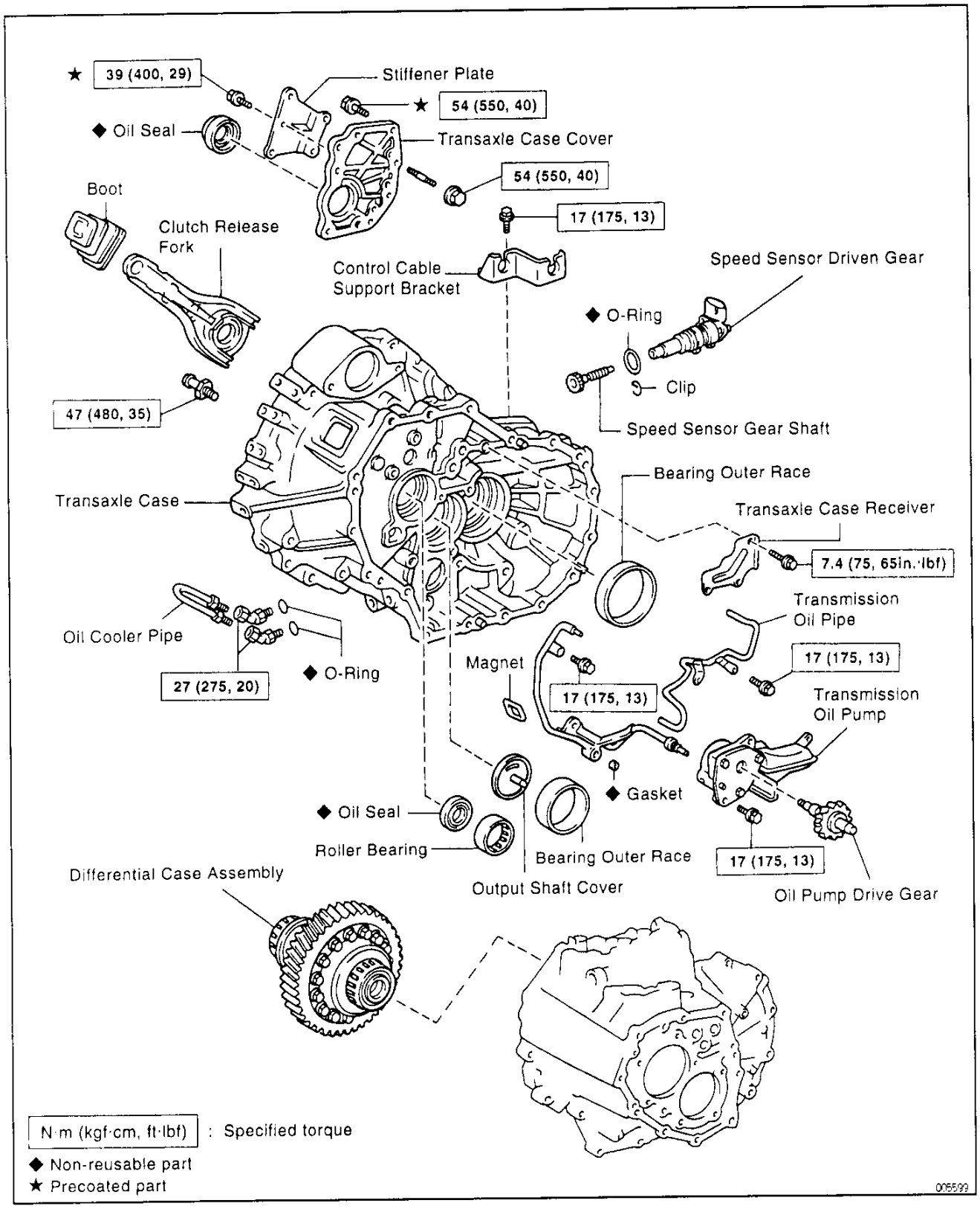

MX

Downloaded from www.Manualslib.com manuals search engine

E56 MANUAL TRANSAXLE – COMPONENT PARTS REMOVAL

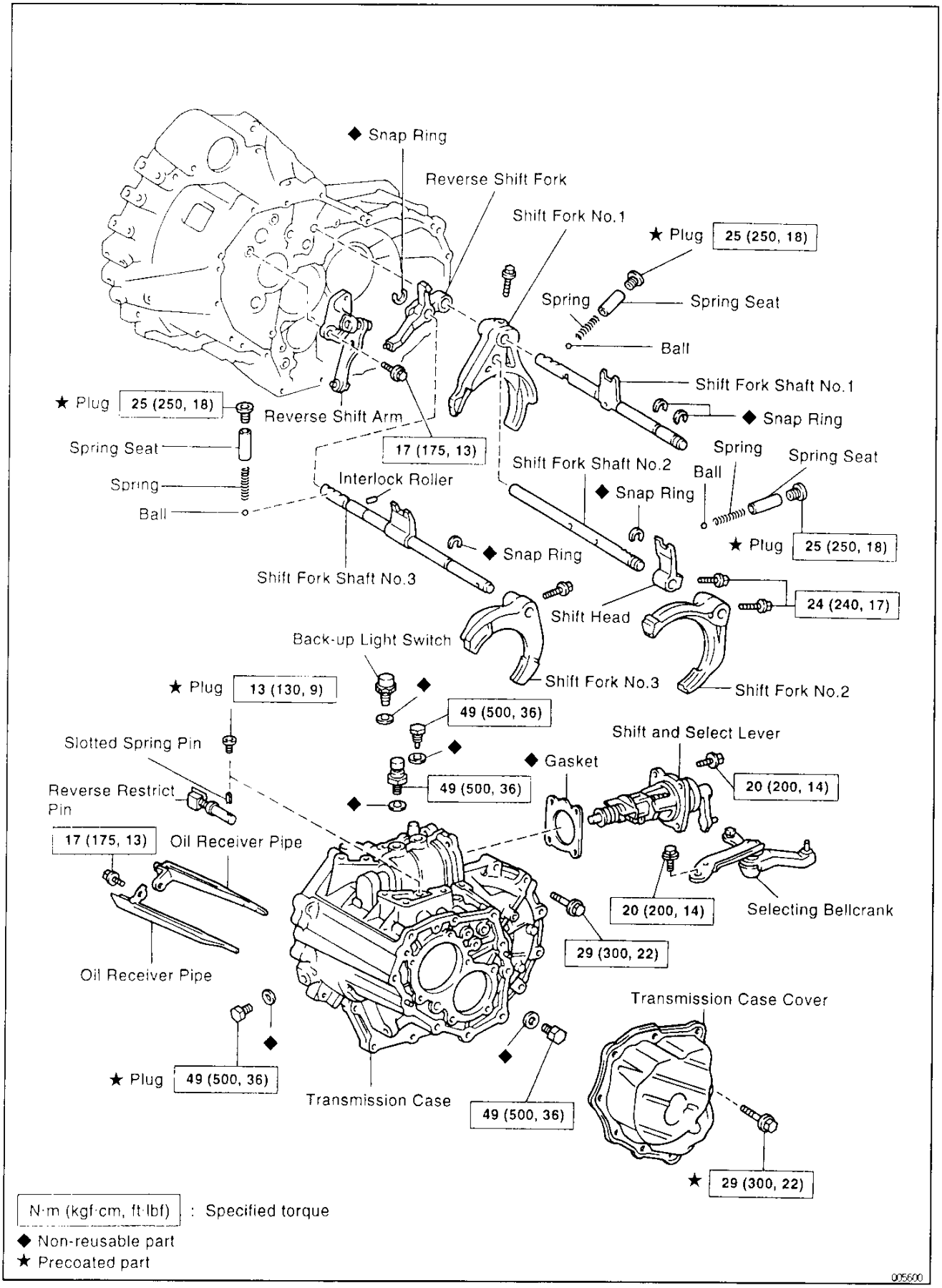

Downloaded from www.Manualslib.com manuals search engine

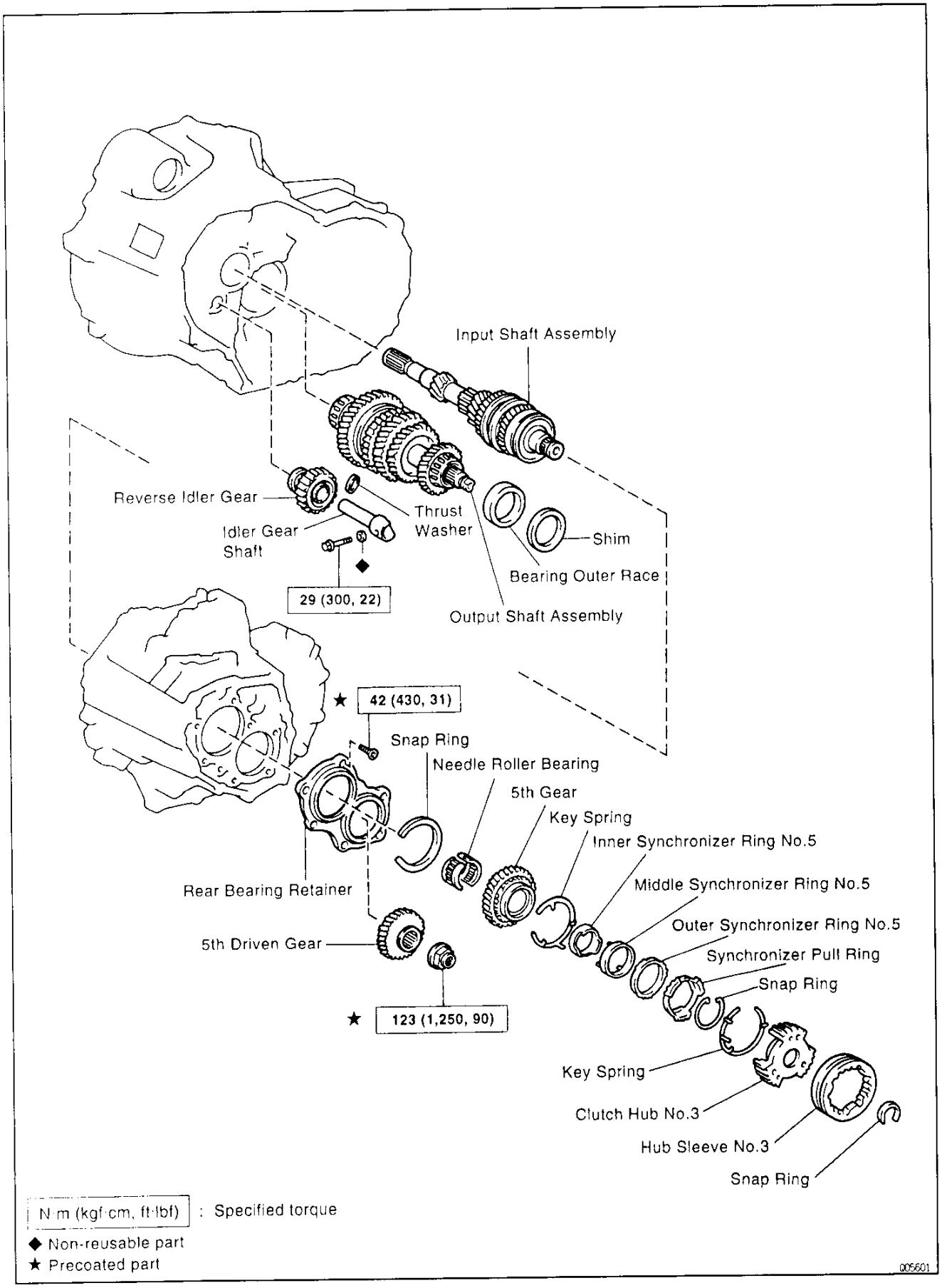

Downloaded from www.Manualslib.com manuals search engine

MX01Y-04

BASIC SUBASSEMBLY SEPARATION

(See pages MX–17 to MX–19)

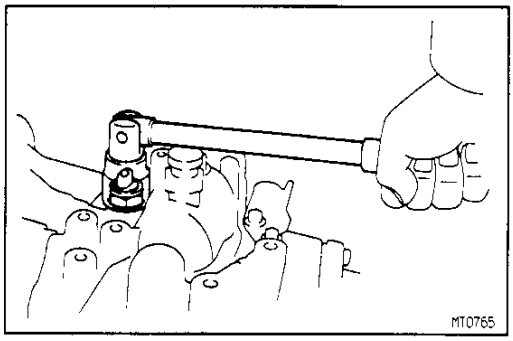

1. **REMOVE RELEASE FORK AND BEARING**
2. **REMOVE BACK–UP LIGHT SWITCH**

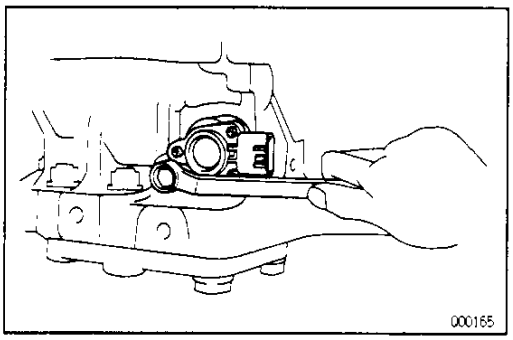

3. **REMOVE VEHICLE SPEED SENSOR**
   (a) Remove the set bolt and lock plate.
   (b) Remove the vehicle speed sensor.
4. **REMOVE 3 BOLTS AND SHIFT CONTROL BRACKET**

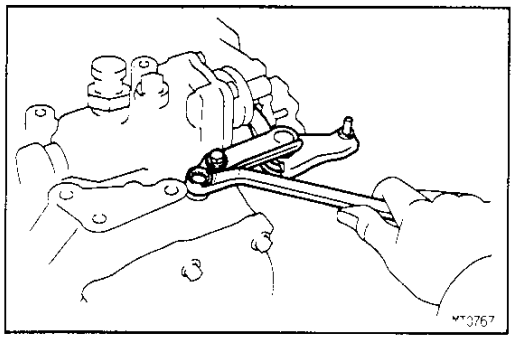

5. **REMOVE SELECTING BELLCRANK ASSEMBLY**

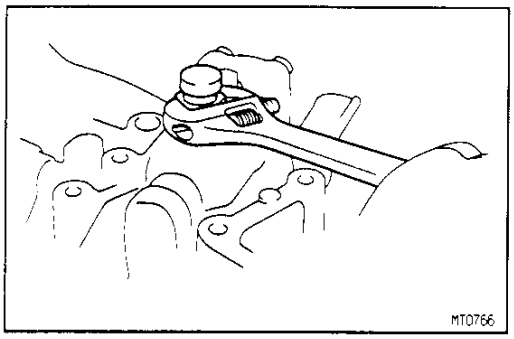

6. **REMOVE BREATHER PLUG**

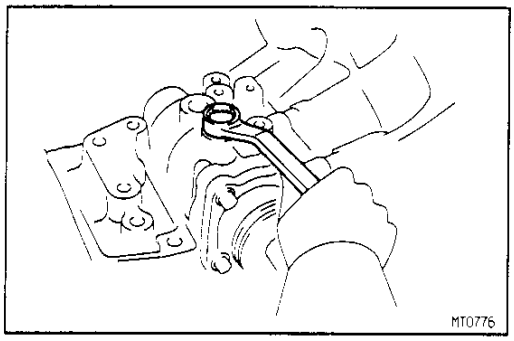

7. **REMOVE SHIFT AND SELECT LEVER SHAFT ASSEMBLY**
   (a) Remove the lock bolt.

Downloaded from www.Manualslib.com manuals search engine

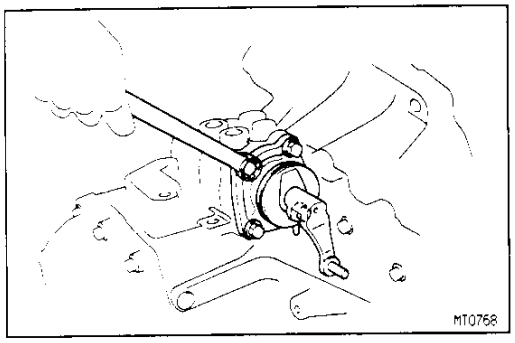

(b) Remove the 4 bolts and pull out the shift and select lever shaft assembly.

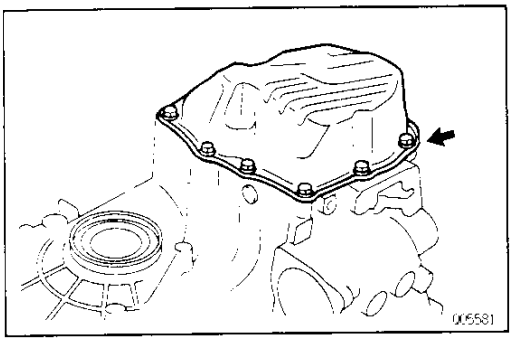

8. REMOVE TRANSMISSION CASE COVER

Remove the 10 bolts and transmission case cover.

MX

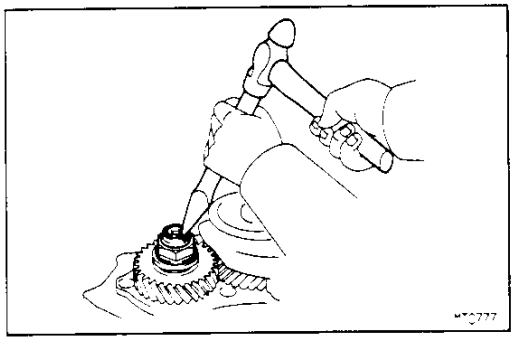

9. REMOVE LOCK NUT

(a) Unstake the lock nut.

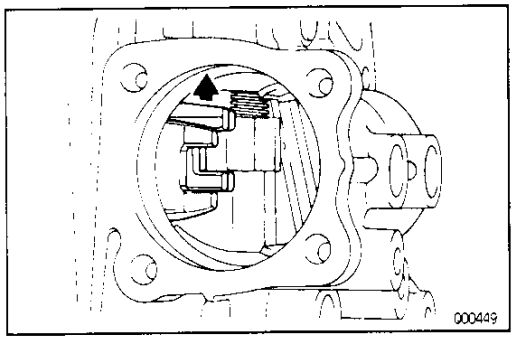

(b) Engage the gear double meshing.

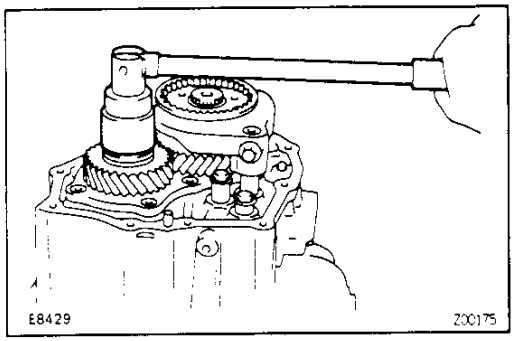

(c) Remove the lock nut.

(d) Disengage the gear double meshing.

Downloaded from www.Manualslib.com manuals search engine

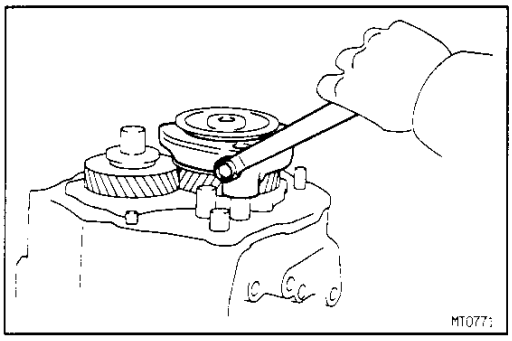

10. REMOVE NO. 3 HUB SLEEVE AND NO. 3 SHIFT FORK

(a) Remove the No.3 shift fork set bolt.

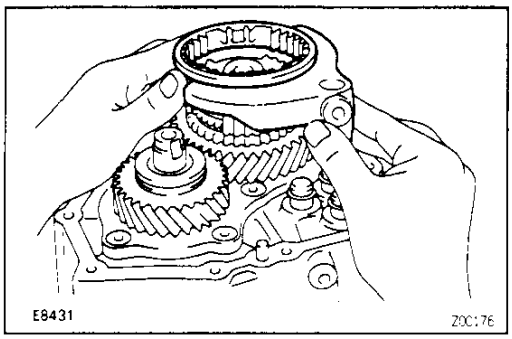

(b) Remove the No.3 hub sleeve and No.3 shift fork.

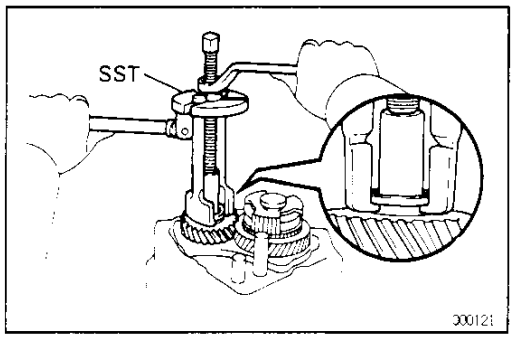

11. REMOVE 5TH DRIVEN GEAR

Using SST, remove the 5th driven gear.
SST 09950–30010

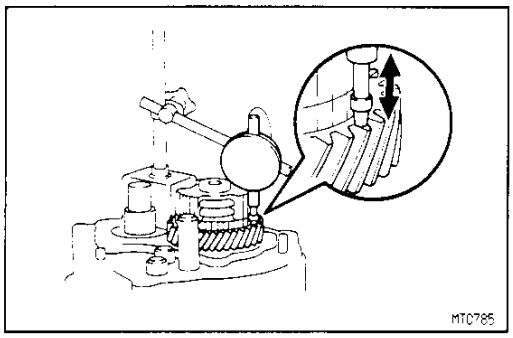

12. MEASURE 5TH GEAR THRUST CLEARANCE AND RADIAL CLEARANCE

(a) Using a dial indicator, measure the thrust clearance.

Standard clearance:

0.10–0.57 mm (0.0039–0.0224 in.)

Maximum clearance:

0.65 mm (0.0256 in.)

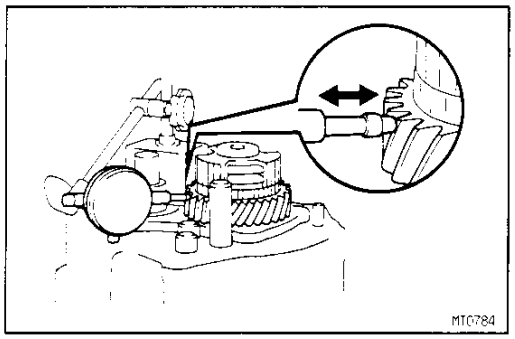

(b) Using a dial indicator, measure the radial clearance.

Standard clearance:

0.009–0.050 mm (0.0004–0.0020 in.)

Maximum clearance:

0.070 mm (0.0028 in.)

Downloaded from www.Manualslib.com manuals search engine

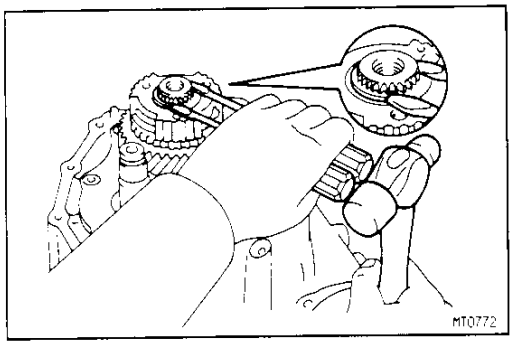

13. REMOVE NO.3 CLUTCH HUB AND 5TH GEAR

(a) Using 2 screwdrivers and a hammer, tap out the snap ring.

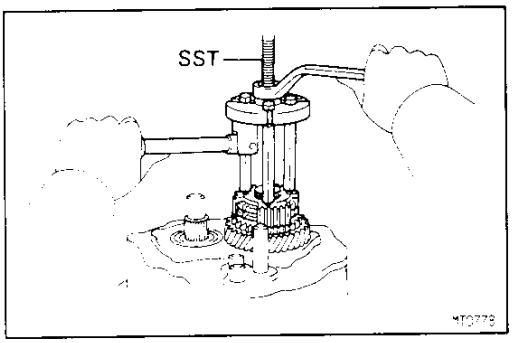

(b) Using SST, remove the No.3 clutch hub with synchronizer ring and 5th gear.
SST 09950–30010

(c) Remove the 5th gear.

14. REMOVE NEEDLE ROLLER BEARING

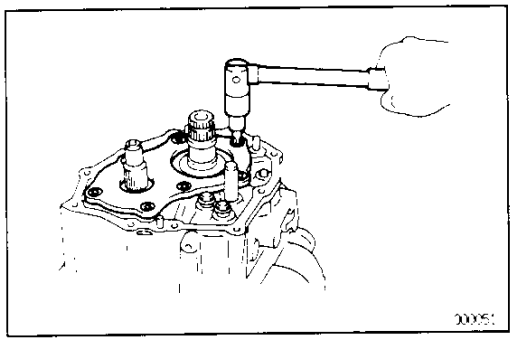

15. REMOVE REAR BEARING RETAINER

(a) Using a torx wrench, remove the 7 torx screws and bearing retainer.
(Torx wrench T45 09042–00050)

(b) Remove the adjust shim.

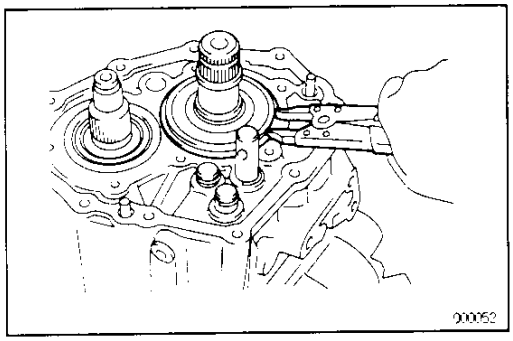

16. REMOVE SNAP RING

(a) Using a snap ring expander, remove the snap ring.

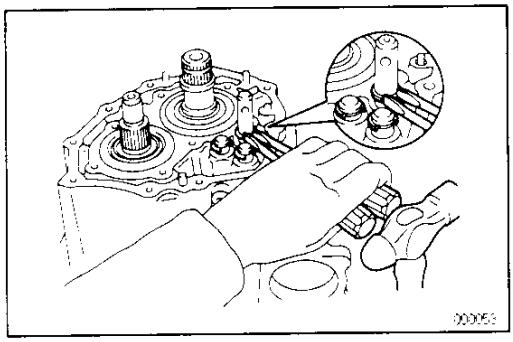

(b) Using 2 screwdrivers and a hammer, remove the 3 snap rings.

MX

Downloaded from www.Manualslib.com manuals search engine

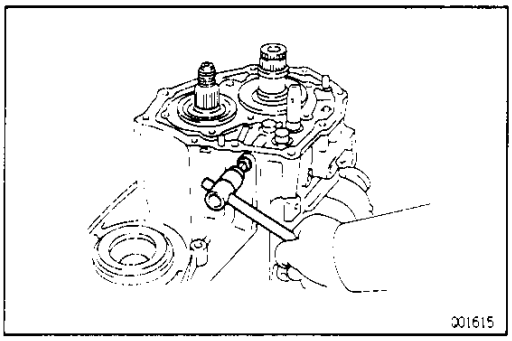

17. REMOVE PLUG, SEAT, SPRING AND LOCKING BALL

(a) Using a hexagon wrench, remove the plug.

MX

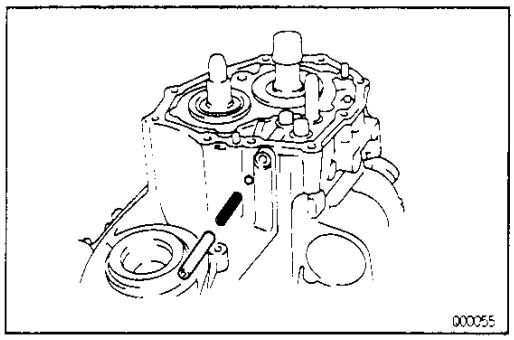

(b) Using a magnetic finger, remove the spring seat, spring and locking ball.

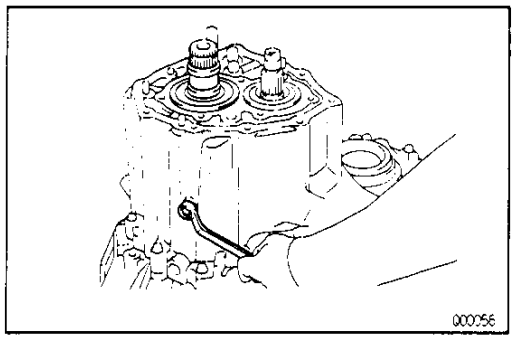

18. REMOVE REVERSE IDLER GEAR SHAFT RETAINING BOLT

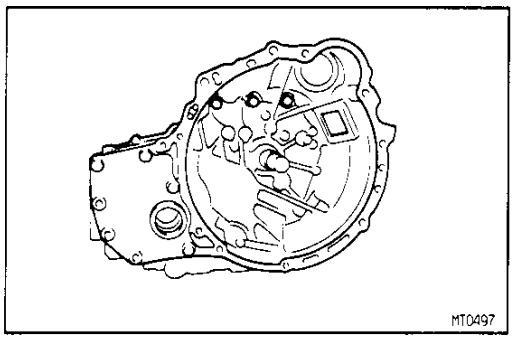

19. REMOVE TRANSMISSION CASE

(a) Remove the 3 bolts from transaxle case side.

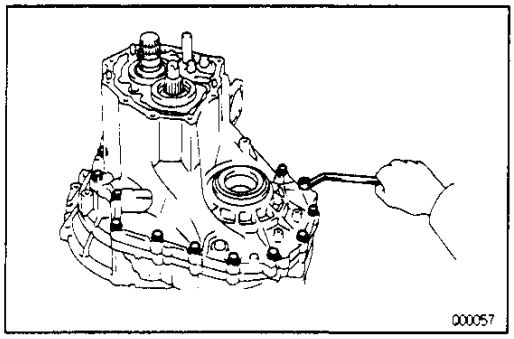

(b) Remove the 14 bolts from the transmission case side and tap off the case with a plastic hammer.

Downloaded from www.Manualslib.com manuals search engine

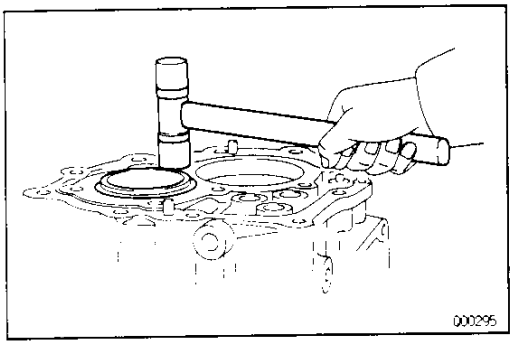

20. REMOVE OUTPUT SHAFT REAR TAPERED ROLLER BEARING OUTER RACE

Using a plastic hammer, tap out the outer race.

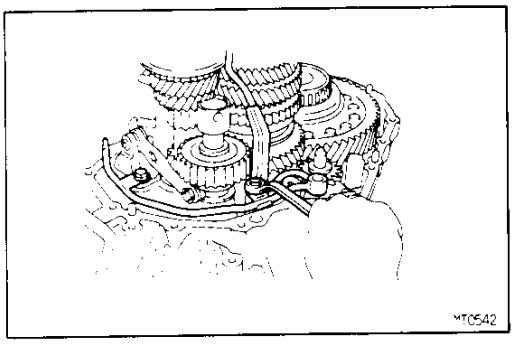

21. REMOVE NO.2 OIL PIPE

(a) Remove the gasket.

(b) Remove the 2 bolts and oil pipe.

MX

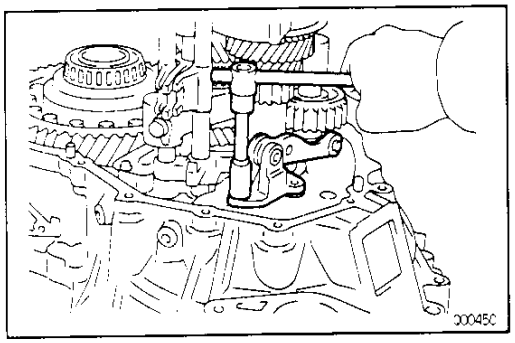

22. REMOVE REVERSE SHIFT ARM BRACKET

Remove the bolt and pull off the bracket.

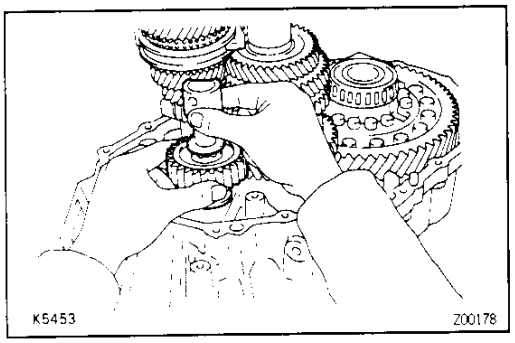

23. REMOVE REVERSE IDLER GEAR AND SHAFT

Pull out the shaft, remove the reverse idler gear and thrust washer.

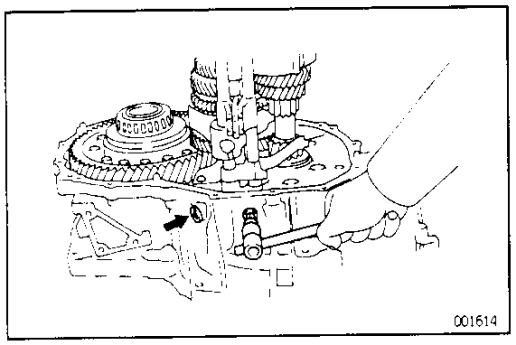

24. REMOVE STRAIGHT SCREW PLUGS, LOCKING BALLS AND SPRINGS

(a) Using a hexagon wrench, remove the 2 plugs.

Downloaded from www.Manualslib.com manuals search engine

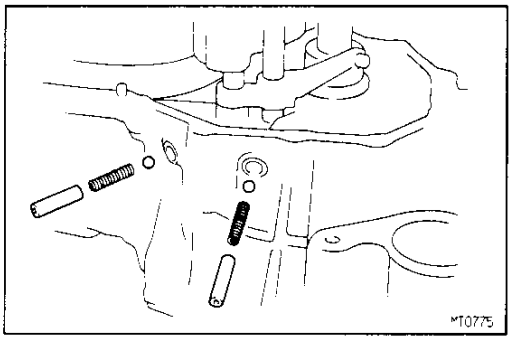

(b) Using a magnetic finger, remove the 2 spring seats, springs and balls.

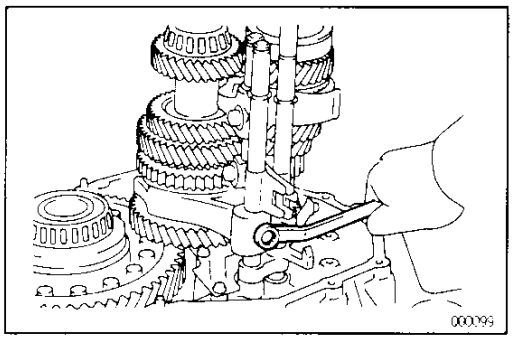

25. REMOVE NO.1 SHIFT FORK SHAFT

(a) Remove the set bolt.

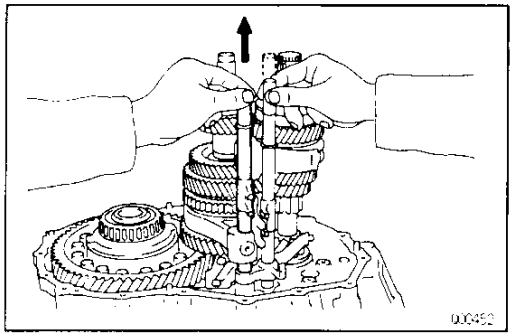

(b) Pull up the No.3 shift fork shaft, remove the No.1 shift fork shaft.

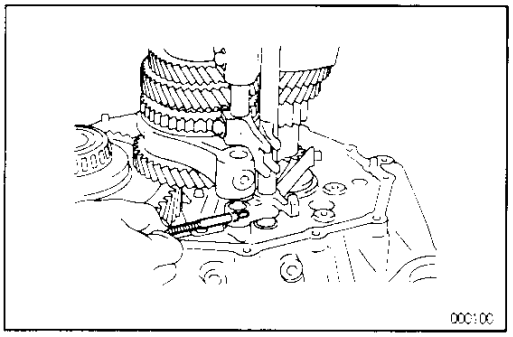

26. REMOVE INTERLOCK ROLLER

Using a magnetic finger, remove the interlock roller from the reverse shift fork.

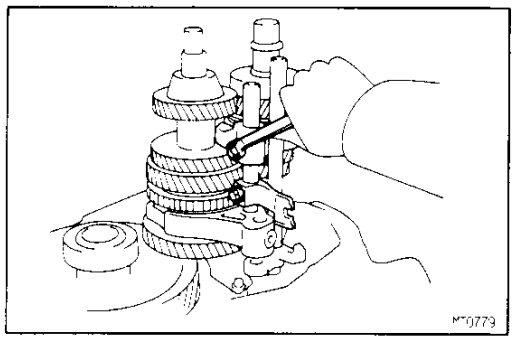

27. REMOVE NO.2 SHIFT FORK SHAFT, SHIFT HEAD AND NO.1 SHIFT FORK

(a) Remove the 2 set bolts.

Downloaded from www.Manualslib.com manuals search engine

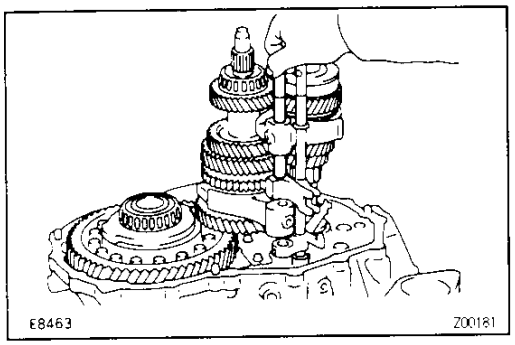

(b) Pull out the No.2 shift fork shaft.
(c) Remove the shift head and No.1 shift fork.

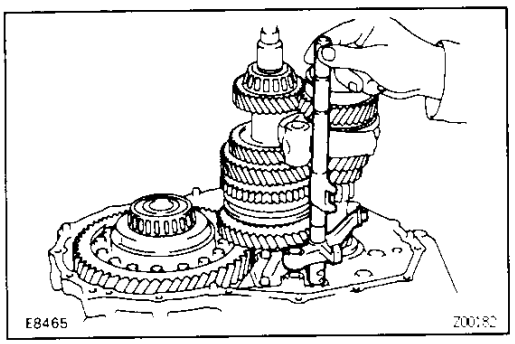

28. REMOVE NO.3 SHIFT FORK SHAFT WITH REVERSE SHIFT FORK AND NO.2 SHIFT FORK

(a) Pull out the No.3 shift fork shaft with reverse shift fork.
(b) Remove the No.2 shift fork.

MX

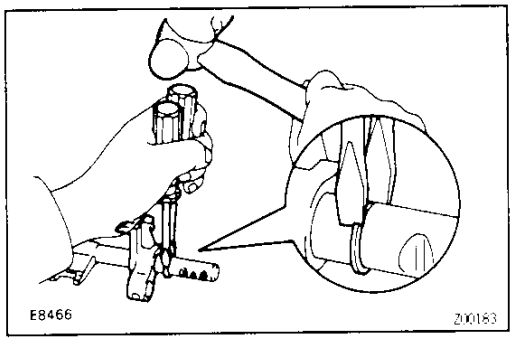

29. REMOVE SNAP RINGS

(a) Using 2 screwdrivers and a hammer, remove the snap ring and reverse shift fork from the No.3 shift fork shaft.
(b) Using 2 screwdrivers and a hammer, remove the snap rings from the No.1, No.2 and No.3 shift fork shaft.

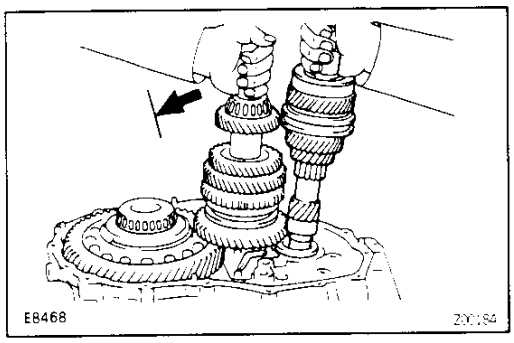

30. REMOVE INPUT AND OUTPUT SHAFT ASSEMBLY

(a) Leaning the output shaft to the differential side remove the input shaft assembly.

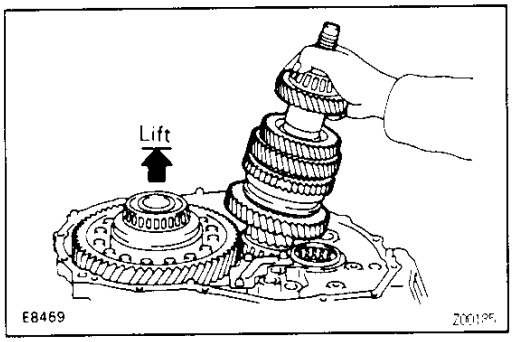

(b) Lift up the differential case assembly, remove the output shaft.

Downloaded from www.Manualslib.com manuals search engine

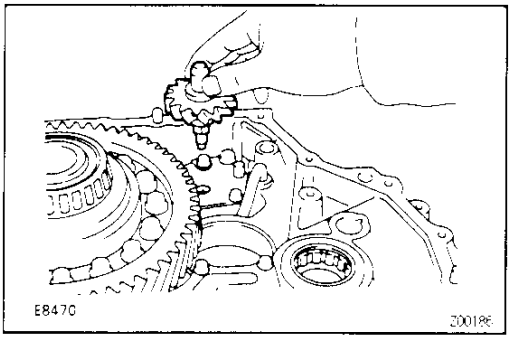

31. REMOVE DIFFERENTIAL ASSEMBLY

(a) Remove the oil pump drive gear.

MX

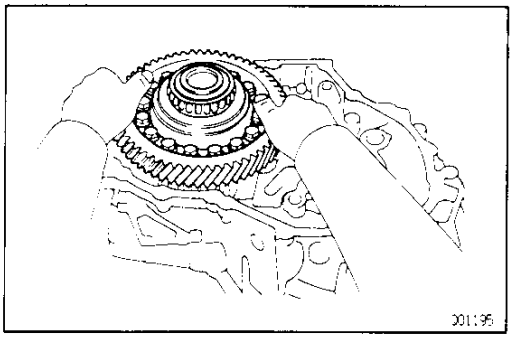

(b) Remove the differential case assembly.

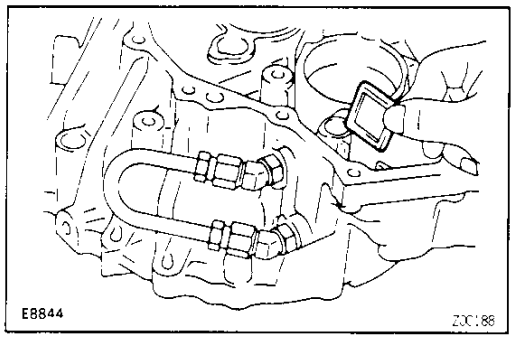

32. REMOVE MAGNET FROM TRANSAXLE CASE

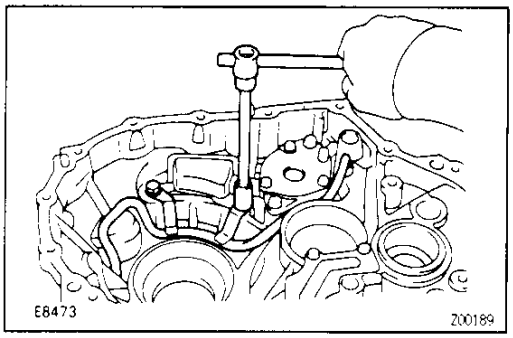

33. REMOVE OIL PUMP ASSEMBLY

(a) Remove the 2 bolts and oil pipe.

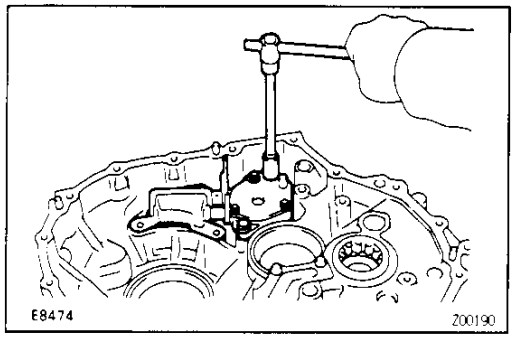

(b) Remove the 2 bolts and oil pump.

Downloaded from www.Manualslib.com manuals search engine

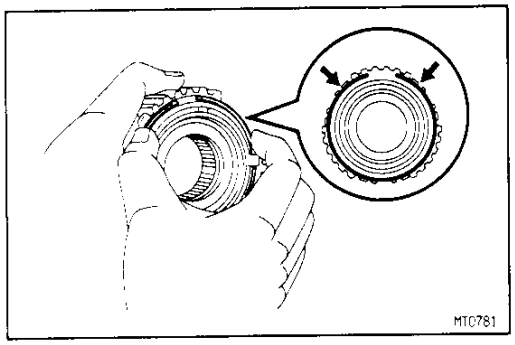

34. REMOVE NO.5 SYNCHRONIZER RING WITH KEY SPRING FROM NO.3 CLUTCH HUB

(a) Remove the No.5 synchronizer ring with key spring from No.3 clutch hub.

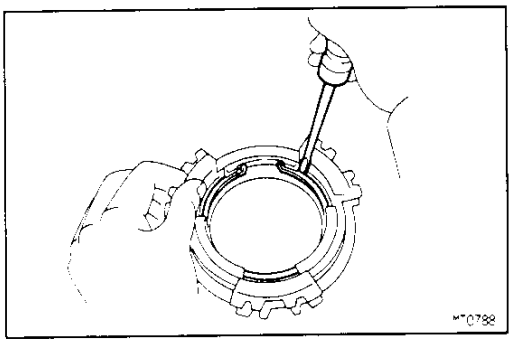

(b) Using a screwdriver, remove the snap ring.
HINT: Wrap vinyl tape on the screwdriver to prevent damaging the synchronizer ring.

(c) Remove the synchronizer rings.

MX

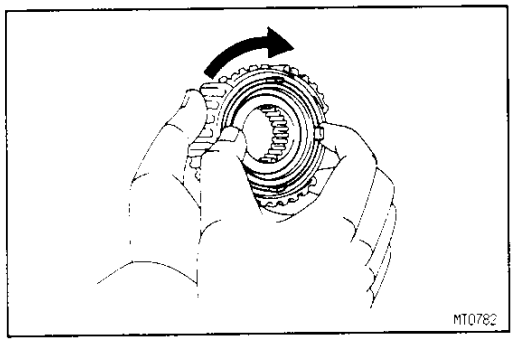

COMPONENT PARTS INSPECTION

MX015-04

1. INSPECT NO.5 SYNCHRONIZER RINGS

(a) Check for wear or damage.

(b) Check the braking effect of the synchronizer ring. Turn the middle No.5 synchronizer ring in one direction while pushing it to the outer No.5 synchronizer ring. Check that the ring locks.
If it does not lock, replace the synchronizer ring.

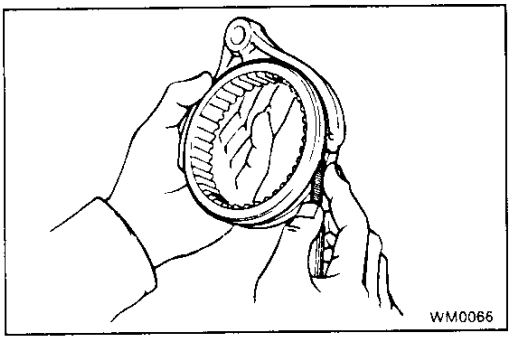

2. MEASURE SHIFT FORKS AND HUB SLEEVE CLEARANCE

Using a feeler gauge, measure the clearance between the hub sleeve and shift fork.

Maximum clearance:

1.0 mm (0.039 in.)

If the clearance exceeds the limit, replace the shift fork or hub sleeve.

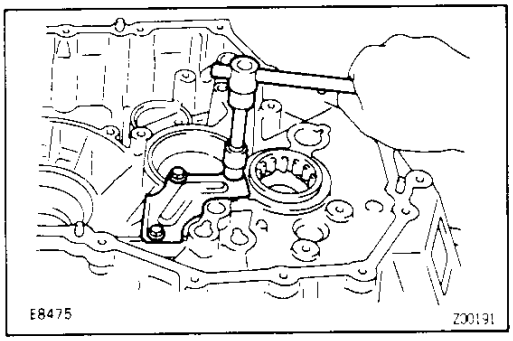

3. IF NECESSARY, REPLACE INPUT SHAFT BEARING AND OIL SEAL

(a) Remove the 3 bolts and transaxle case receiver.

Downloaded from www.Manualslib.com manuals search engine

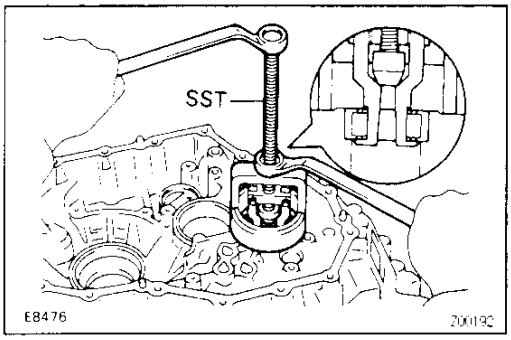

(b) Using SST, pull out the bearing.
SST 09612–65014

MX

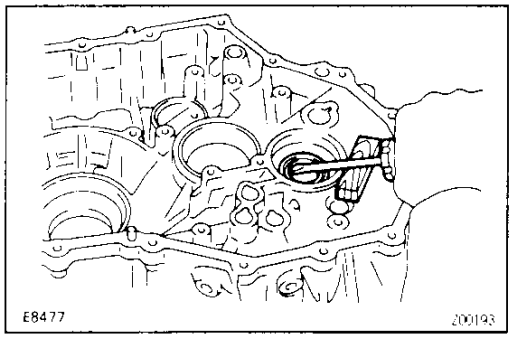

(c) Using a screwdriver, remove the oil seal.

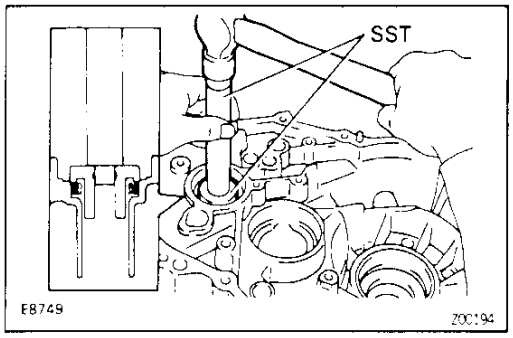

(d) Using SST, drive in a new oil seal.
SST 09608–12010 (09608–00020, 09608–00080)
(e) Coat the lip of seal with MP grease.

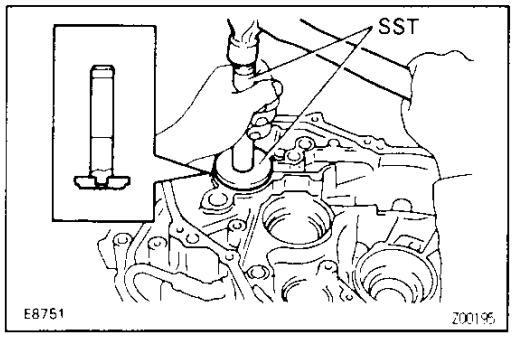

(f) Using SST, drive in a new bearing.
SST 09608–12010 (09608–00020, 09608–00060)

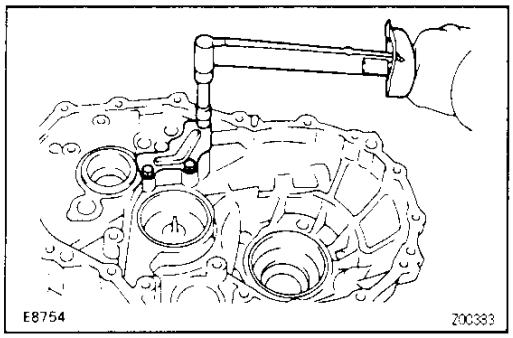

(g) Install the transaxle case receiver.
(h) Install and torque the 3 bolts.
Torque: 7.4 N·m (75 kgf·cm, 65 in.·lbf)

Downloaded from www.Manualslib.com manuals search engine

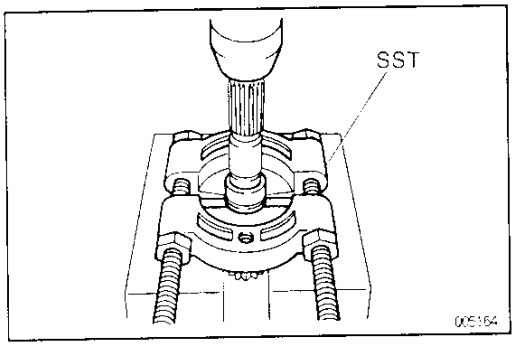

(i) Using SST and a press, remove the inner race.
SST 09950–00020

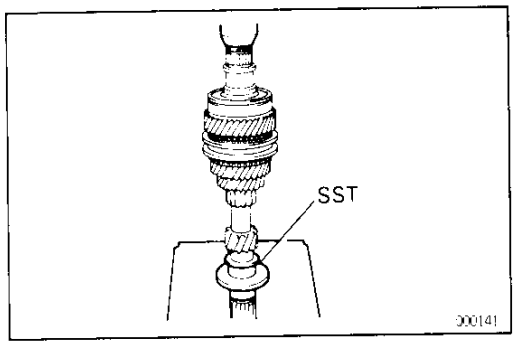

(j) Using SST and a press, install a new input shaft front bearing inner race.
SST 09316–60010 (09316–00020)

MX

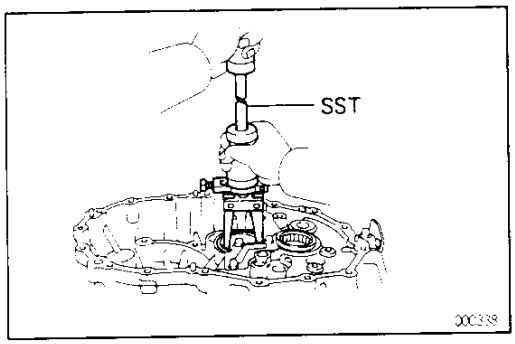

4. IF NECESSARY, REPLACE OUTPUT SHAFT FRONT BEARING AND OUTPUT SHAFT FRONT COVER

(a) Using SST, pull out the output shaft front bearing outer race.
SST 09308–00010

(b) Remove the output shaft front cover.

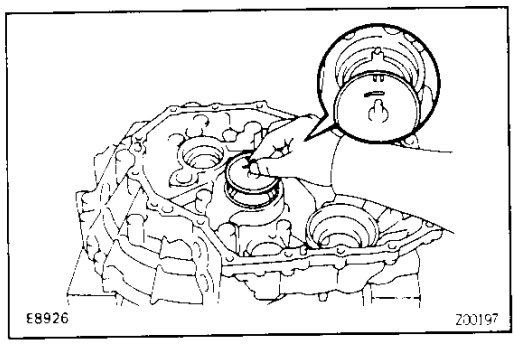

(c) Install a new output shaft front cover.
HINT: Install the output shaft front cover projection into the case side groove.

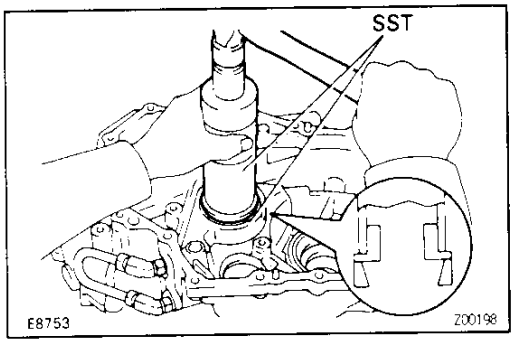

(d) Using SST and a hammer, drive in a new output shaft front bearing outer race.
SST 09316–60010 (09316–00010, 09316–00020)

Downloaded from www.Manualslib.com manuals search engine

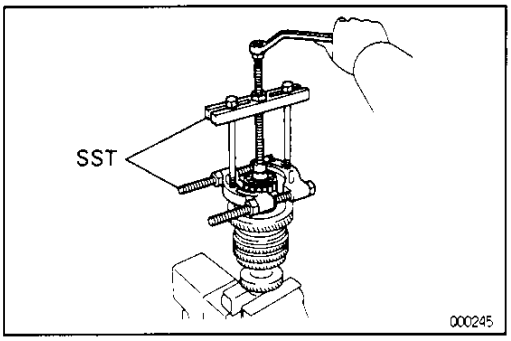

(e) Using SST and a socket wrench, remove the output shaft front bearing.
SST 09950–00020, 09950–00030

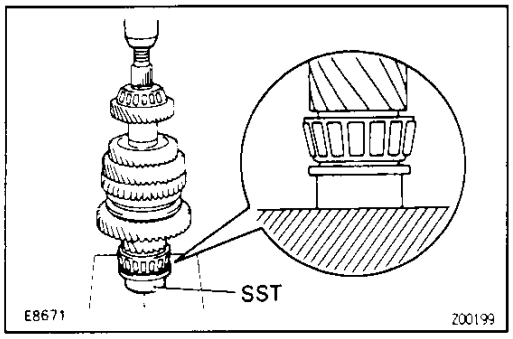

(f) Using SST and a press, install a new output shaft front bearing.
SST 09316–60010 (09316–00070)

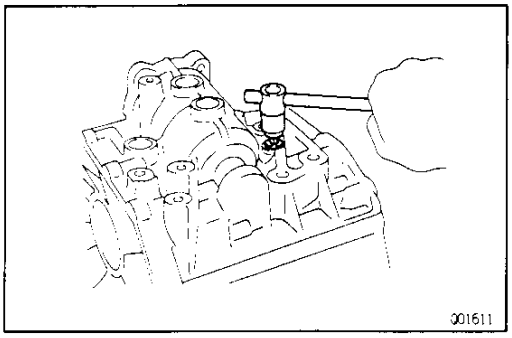

5. IF NECESSARY, REPLACE REVERSE RESTRICT PIN

(a) Using a hexagon wrench, remove the screw plug.

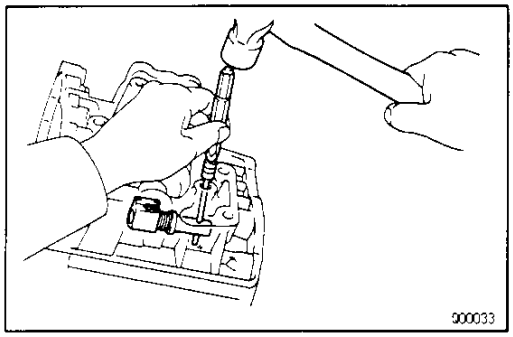

(b) Using a pin punch and a hammer, drive out the slotted spring pin.

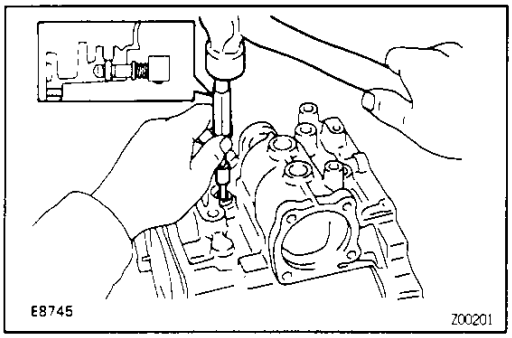

(c) Replace the reverse restrict pin.

(d) Using a pin punch and hammer, drive in the slotted spring pin.

Downloaded from www.Manualslib.com manuals search engine

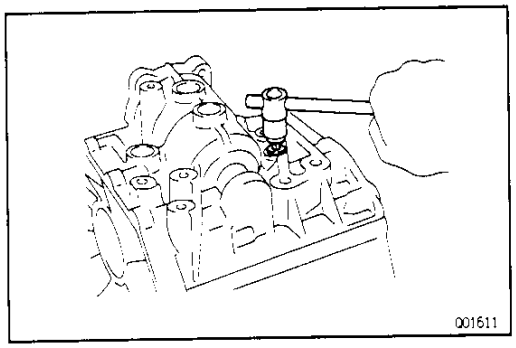

(e) Apply sealant to the screw plug threads.
Sealant:
Part No. 08833–00080, THREE BOND 1344, LOCTITE 242 or equivalent

(f) Using a hexagon wrench, install the screw plug.

Downloaded from www.Manualslib.com manuals search engine

INPUT SHAFT
COMPONENTS

MX016-01

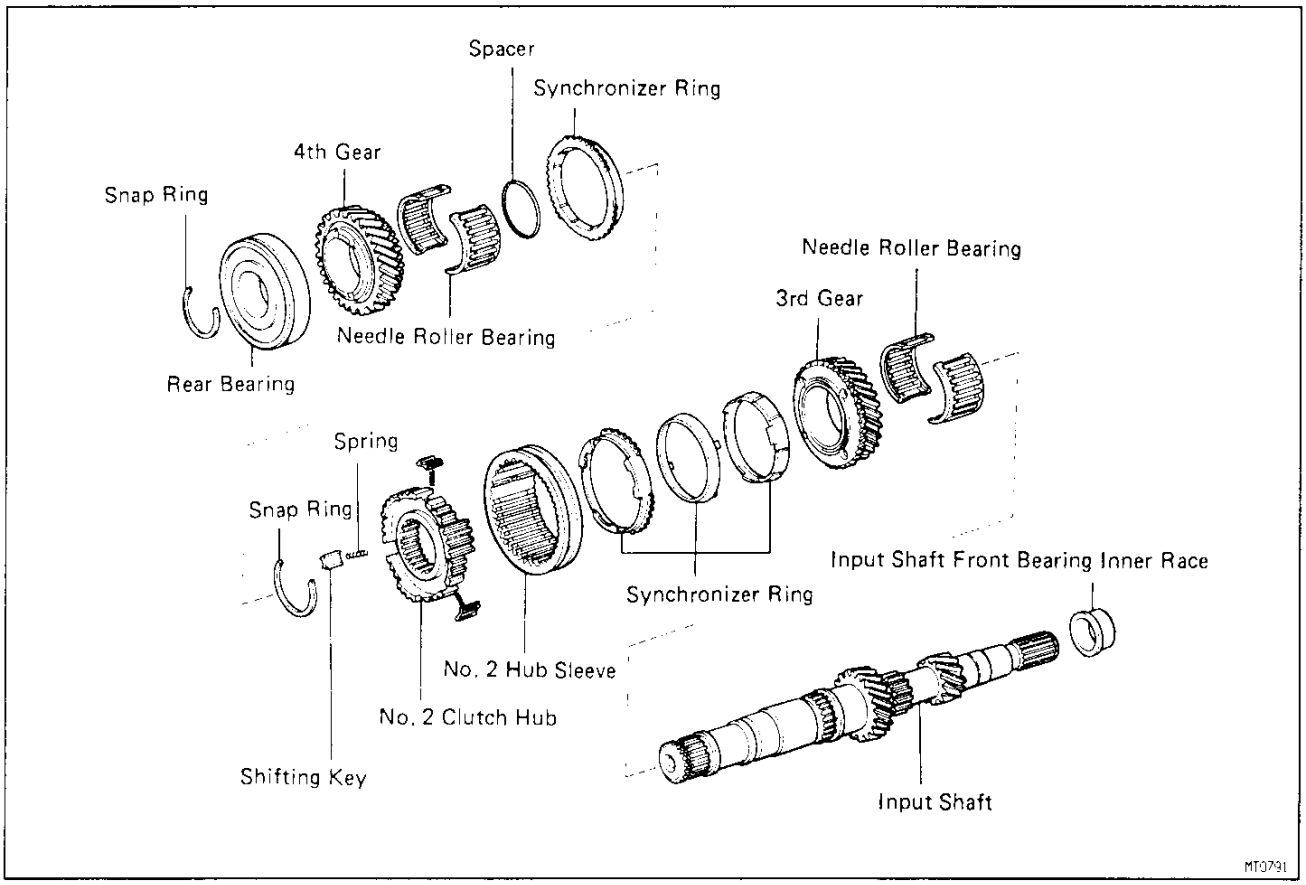

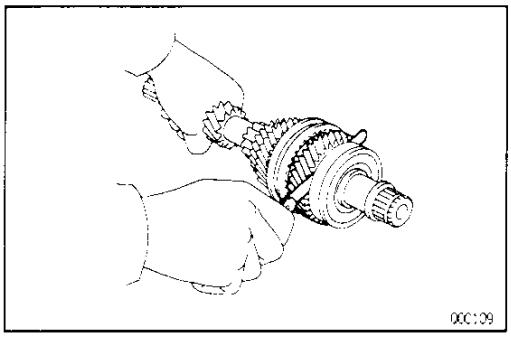

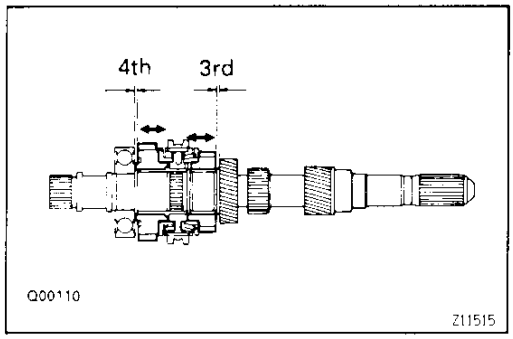

MX017-04

INPUT SHAFT DISASSEMBLY

1. MEASURE 3RD AND 4TH GEAR THRUST CLEARANCE

Using a feeler gauge, measure the thrust clearance.

Standard clearance:

3rd gear

0.10 – 0.45 mm (0.0039 – 0.0177 in.)

4th gear

0.10 – 0.55 mm (0.0039 – 0.0217 in.)

Maximum clearance:

3rd gear

0.50 mm (0.0197 in.)

4th gear

0.60 mm (0.0236 in.)

Downloaded from www.Manualslib.com manuals search engine

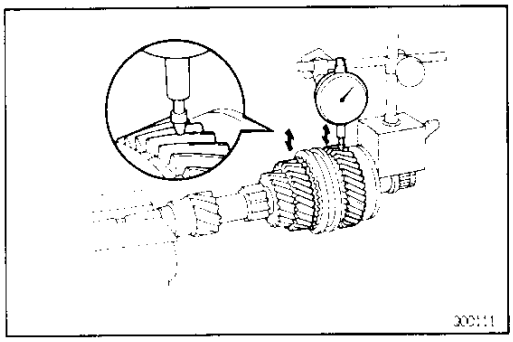

2. **CHECK 3RD AND 4TH GEAR RADIAL CLEARANCE**
Using dial indicator, measure the radial clearance between the gear and shaft.
Standard clearance:
3rd gear
0.009 – 0.053 mm (0.0004 – 0.0021 in.)
4th gear
0.009 – 0.051 mm (0.0004 – 0.0020 in.)
Maximum clearance:
3rd and 4th gear
0.070 mm (0.0028 in.)
If clearance exceeds the limit, replace the gear, needle roller bearing or shaft.

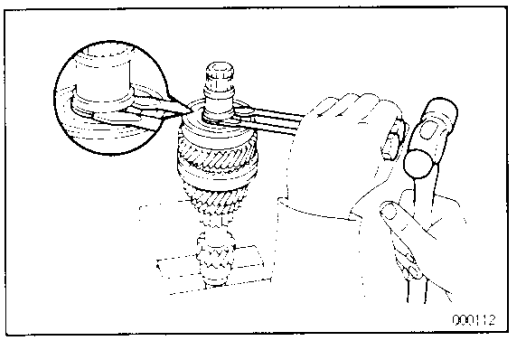

3. **REMOVE SNAP RING**
Using 2 screwdrivers and a hammer, tap out the snap ring.

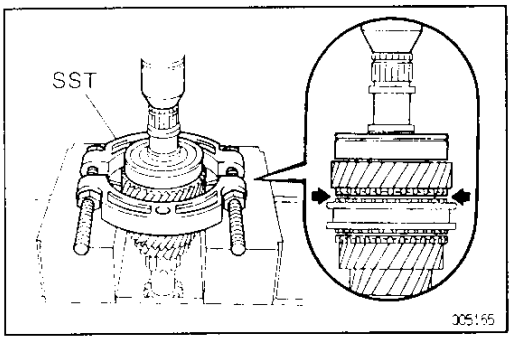

4. **REMOVE RADIAL BALL BEARING AND 4TH GEAR**
Using SST and a press, remove the radial bearing.
SST 09950–00020
5. **REMOVE NEEDLE ROLLER BEARINGS, SPACER AND SYNCHRONIZER RING**

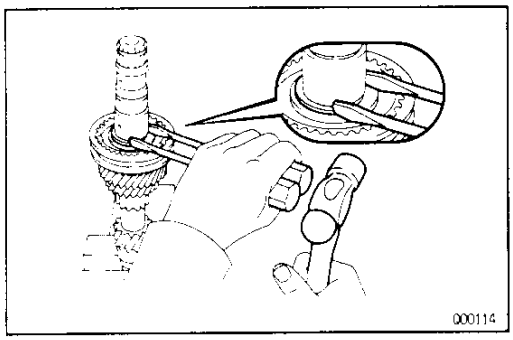

6. **REMOVE SNAP RING**
Using 2 screwdrivers and a hammer, tap out the snap ring.

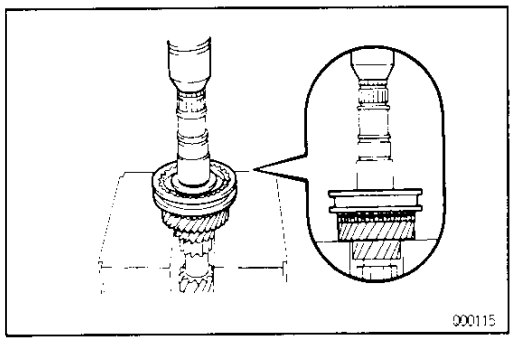

7. **REMOVE NO.2 CLUTCH HUB ASSEMBLY, SYNCHRONIZER RINGS AND 3RD GEAR**
Using a press, remove the No.2 hub sleeve, 3rd gear, synchronizer rings.
8. **REMOVE NEEDLE ROLLER BEARINGS**

MX

Downloaded from www.Manualslib.com manuals search engine

MX

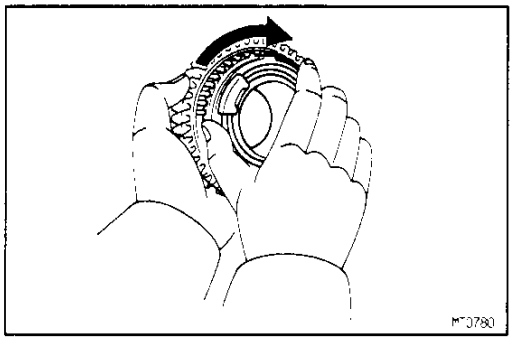

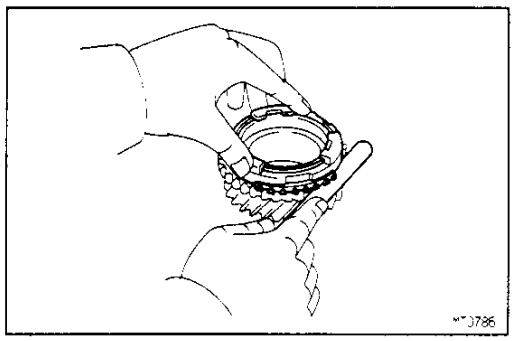

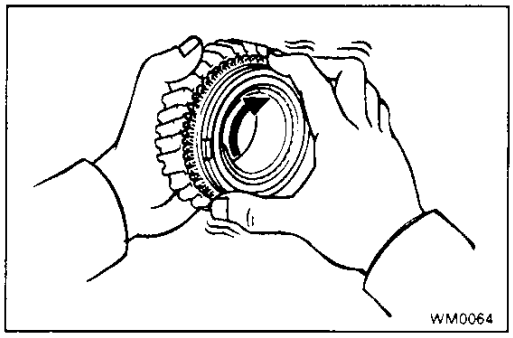

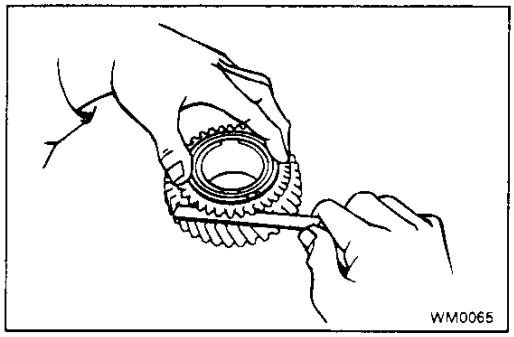

MX018-03

INPUT SHAFT COMPONENT PARTS INSPECTION

1. INSPECT 3RD GEAR SYNCHRONIZER RING

(a) Check for wear or damage.

(b) Check the braking effect of the synchronizer ring. Turn the synchronizer ring in one direction while pushing it to the gear cone. Check that the ring locks.
If it does not lock, replace the synchronizer ring.

(c) Measure the clearance between the synchronizer ring back and gear spline end.
Minimum clearance:
0.7 mm (0.028 in.)
If the clearance is less than the limit, replace the synchronizer ring.

2. INSPECT 4TH GEAR SYNCHRONIZER RING

(a) Check for wear or damage.

(b) Check the braking effect of the synchronizer ring. Turn the synchronizer ring in one direction while pushing it to the gear cone. Check that the ring locks.
If the braking effect is insufficient, apply a small amount of fine lapping compound between the synchronizer ring and gear cone.
Lightly rub the synchronizer ring and gear cone together.
NOTICE: Ensure the fine lapping compound is completely washed off after rubbing.

(c) Check again the braking effect of the synchronizer ring.

(d) Measure the clearance between the synchronizer ring back and spline end.
Minimum clearance:
0.6 mm (0.024 in.)
If the clearance is less than the limit, replace the synchronizer ring and gear cone by applying a small amount of fine lapping compound.
NOTICE: Ensure the fine lapping compound is completely washed off after rubbing.

Downloaded from www.Manualslib.com manuals search engine

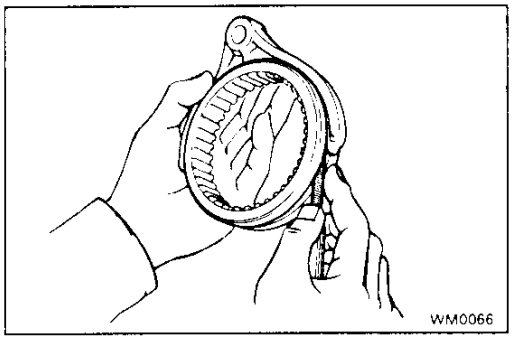

3. MEASURE NO.2 SHIFT FORK AND HUB SLEEVE CLEARANCE

Using a feeler gauge, measure the clearance between the hub sleeve and shift fork.

Maximum clearance:

1.0 mm (0.039 in.)

If the clearance exceeds the limit, replace the shift fork or hub sleeve.

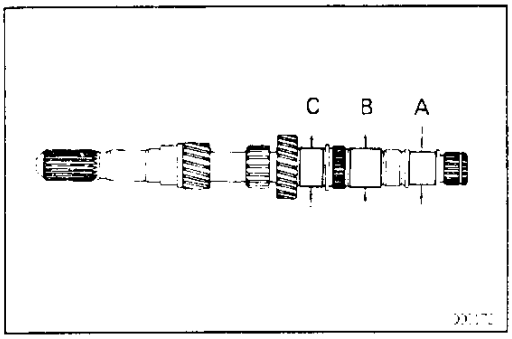

4. INSPECT INPUT SHAFT

(a) Check the input shaft for wear or damage.

(b) Using a micrometer, measure the outer diameter of the input shaft journal surface.

Minimum outer diameter:

Part A

27.950 mm (1.1004 in.)

Part B and C

35.950 mm (1.4154 in.)

MX

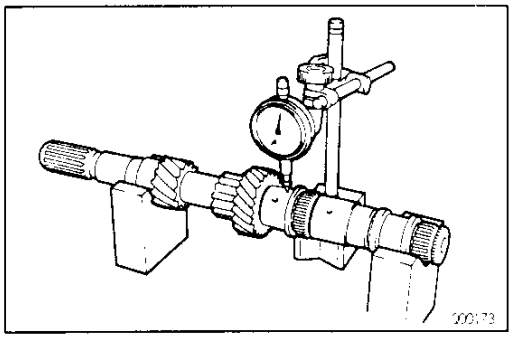

(c) Using a dial indicator, check the shaft runout.

Maximum runout:

0.05 mm (0.0020 in.)

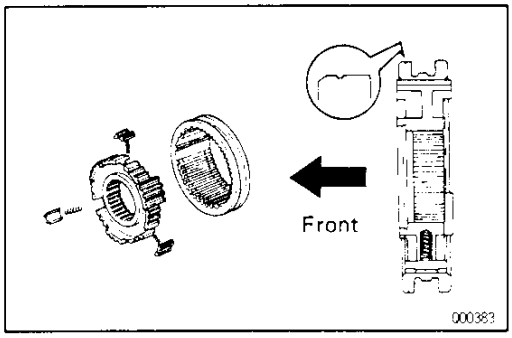

INPUT SHAFT ASSEMBLY

(See page MX–34)

HINT: Coat all of the sliding and rotating surfaces with gear oil before assembly.

1. INSTALL NO.2 CLUTCH HUB INTO HUB SLEEVE

(a) Install the 3 springs and shifting keys to the clutch hub.

(b) Install the hub sleeve to the clutch hub.

HINT: Direct identification groove of the hub sleeve to front of the transaxle.

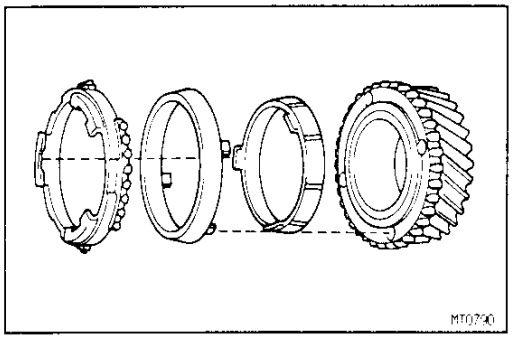

2. INSTALL NEEDLE ROLLER BEARINGS, 3RD GEAR, SYNCHRONIZER RINGS AND NO.2 HUB SLEEVE ASSEMBLY TO INPUT SHAFT

(a) Apply MP grease to the needle roller bearing.

(b) Assemble the needle roller bearings into the 3rd gear.

(c) Place the synchronizer rings on the gear and align the ring slots with the shifting keys.

Downloaded from www.Manualslib.com manuals search engine

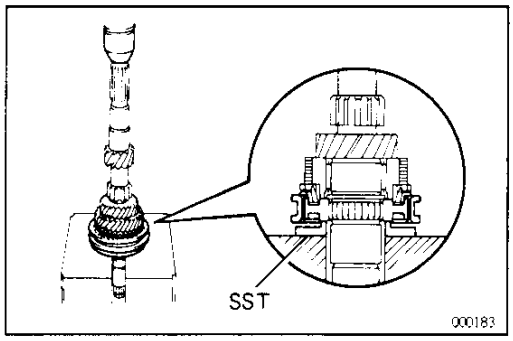

(d) Using SST and a press, install the 3rd gear and No.2 hub sleeve.
SST 09506–35010

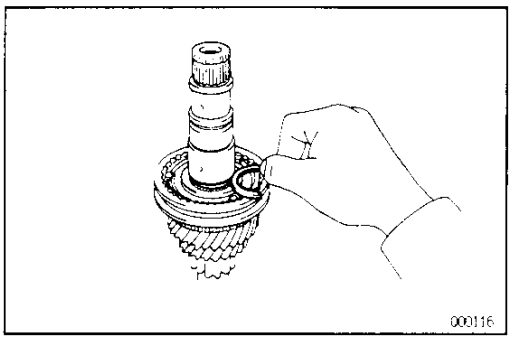

3. INSTALL SNAP RING

(a) Select a snap ring that will allow minimum axial play.

Mark	Thickness mm (in.)	Mark	Thickness mm (in.)
H	2.30 (0.0906)	M	2.50 (0.0984)
J	2.35 (0.0925)	N	2.55 (0.1004)
K	2.40 (0.0945)	P	2.60 (0.1024)
L	2.45 (0.0965)	–	–

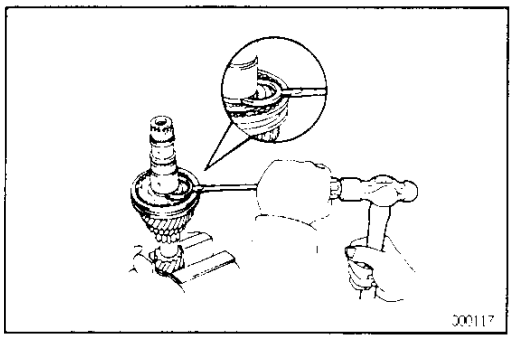

(b) Using a screwdriver and hammer, tap in the snap ring.

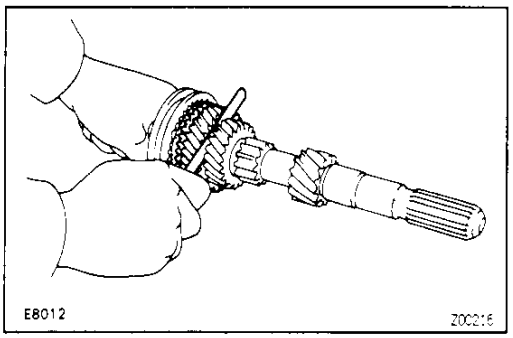

4. MEASURE 3RD GEAR THRUST CLEARANCE

Using a feeler gauge, measure the 3rd gear thrust clearance.

Standard clearance:

0.10 – 0.45 mm (0.0039 – 0.0177 in.)

Downloaded from www.Manualslib.com manuals search engine

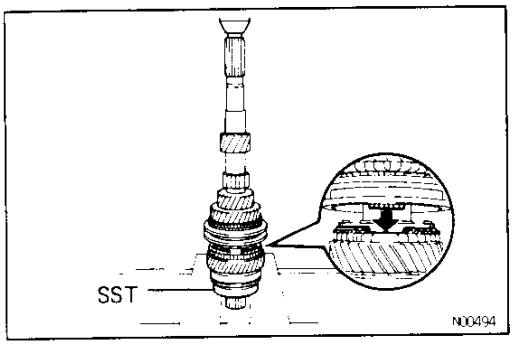

5. INSTALL SPACER, SYNCHRONIZER RING, NEEDLE ROLLER BEARINGS, 4TH GEAR AND RADIAL BALL BEARING

(a) Install the spacer.

(b) Apply MP grease to the needle roller bearings.

(c) Place the synchronizer ring on the gear and align the ring slots with the shifting keys.

(d) Install the 4th gear.

(e) Using SST and a press, install the radial ball bearing.
SST 09506–35010

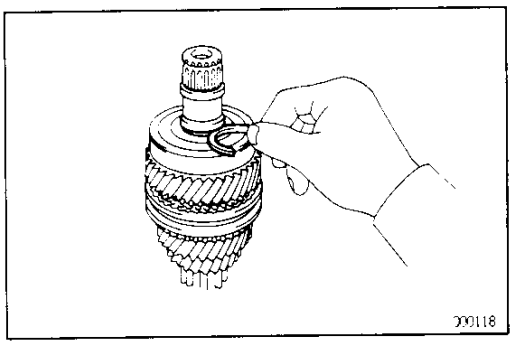

6. INSTALL SNAP RING

(a) Select a snap ring that will allow minimum axial play.

Mark	Thickness mm (in.)	Mark	Thickness mm (in.)
1	2.35 (0.0925)	5	2.55 (0.1004)
2	2.40 (0.0945)	6	2.60 (0.1024)
3	2.45 (0.0965)	7	2.65 (0.1043)
4	2.50 (0.0984)	8	2.70 (0.1063)

MX

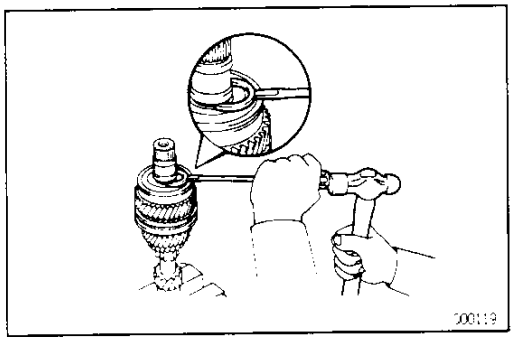

(b) Using a screwdriver and hammer, tap in the snap ring.

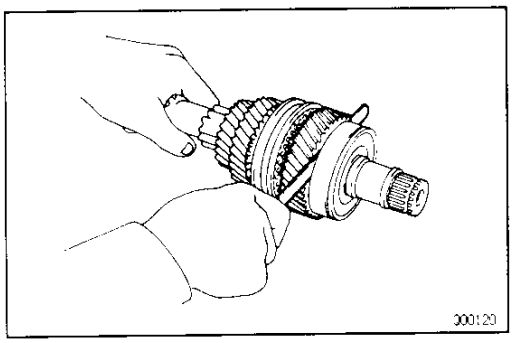

7. MEASURE 4TH GEAR THRUST CLEARANCE

Using a feeler gauge, measure the 4th gear thrust clearance.

Standard clearance:

0.10 – 0.55 mm (0.0039 – 0.0217 in.)

Downloaded from www.Manualslib.com manuals search engine

OUTPUT SHAFT
COMPONENTS

MX01A-01

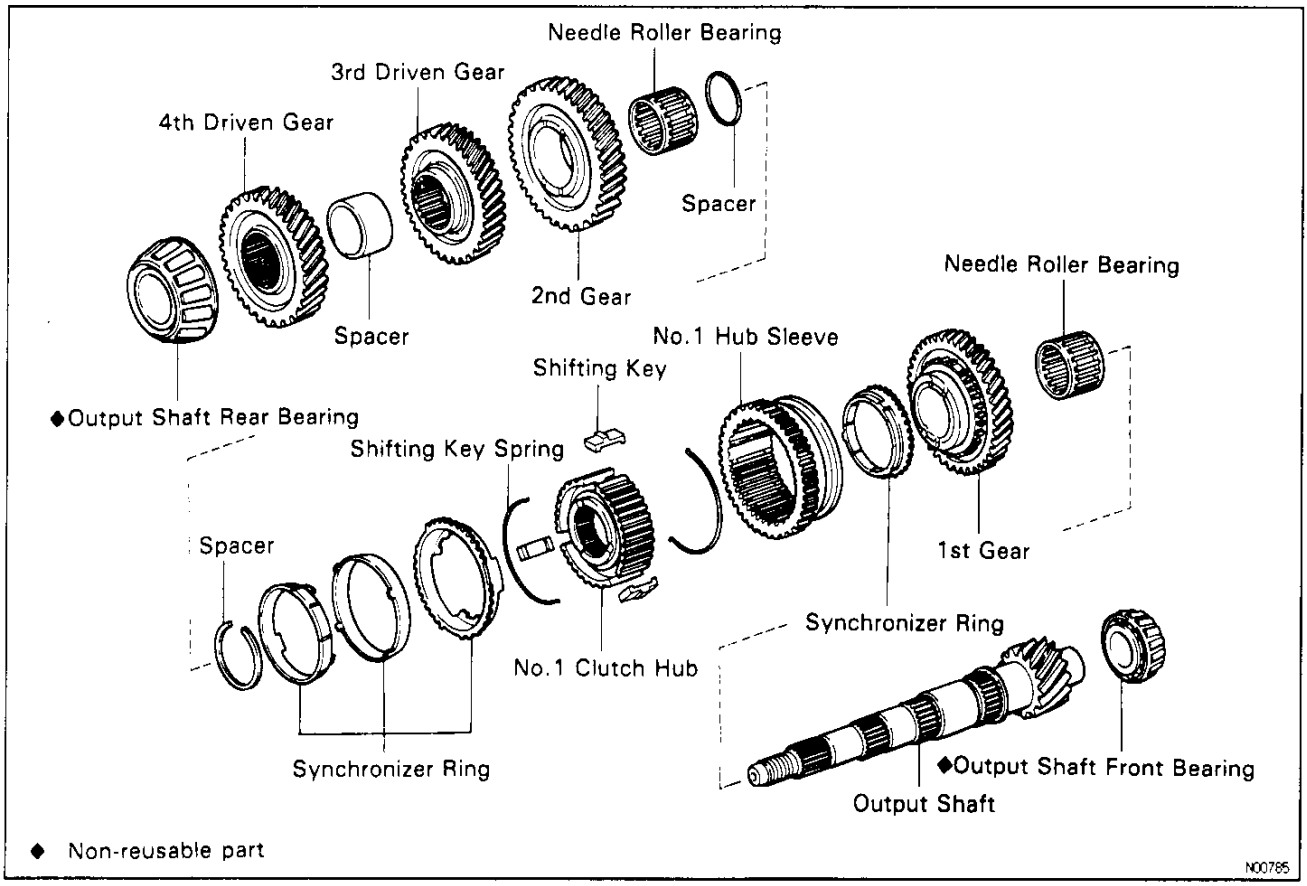

MX

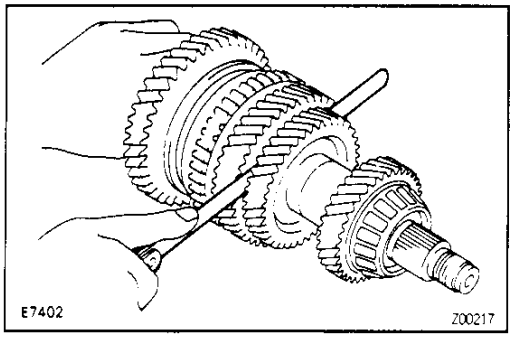

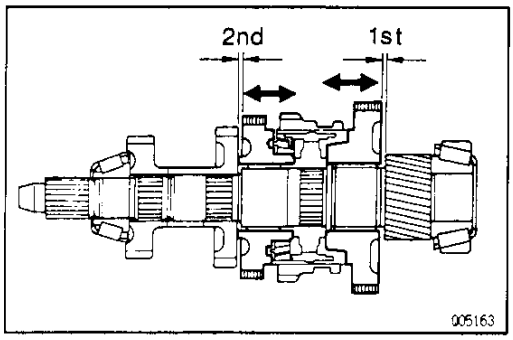

OUTPUT SHAFT DISASSEMBLY

MX01B-03

1. MEASURE 1ST AND 2ND GEAR THRUST CLEARANCE

Using a feeler gauge, measure the thrust clearance.

Standard clearance:

1st gear

0.10 – 0.35 mm (0.0039 – 0.0138 in.)

2nd gear

0.10 – 0.45 mm (0.0039 – 0.0177 in.)

Maximum clearance:

1st gear

0.40 mm (0.0157 in.)

2nd gear

0.50 mm (0.0197 in.)

Downloaded from www.Manualslib.com manuals search engine

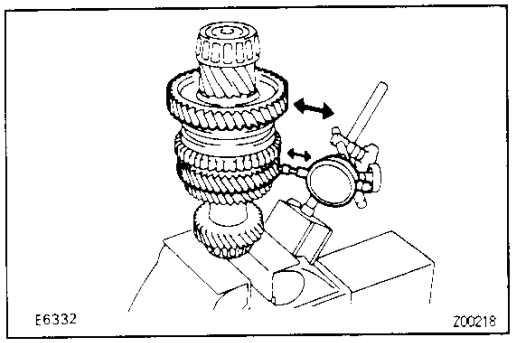

2. CHECK 1ST AND 2ND GEAR RADIAL CLEARANCE

Using a dial indicator, measure the radial clearance between the gear and shaft.

Standard clearance:

1st gear

0.009 – 0.051 mm (0.0004 – 0.0020 in.)

2nd gear

0.009 – 0.053 mm (0.0004 – 0.0021 in.)

Maximum clearance:

1st and 2nd gear

0.070 mm (0.0028 in.)

If the clearance exceeds the limit, replace the gear, needle roller bearing or shaft.

MX

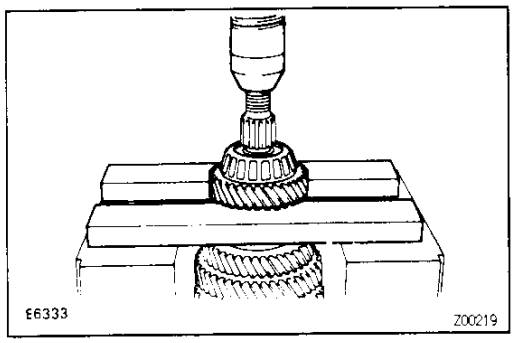

3. REMOVE OUTPUT SHAFT REAR BEARING, 4 TH DRIVEN GEAR AND SPACER

(a) Using a press, remove the bearing and 4th driven gear.

(b) Remove the spacer.

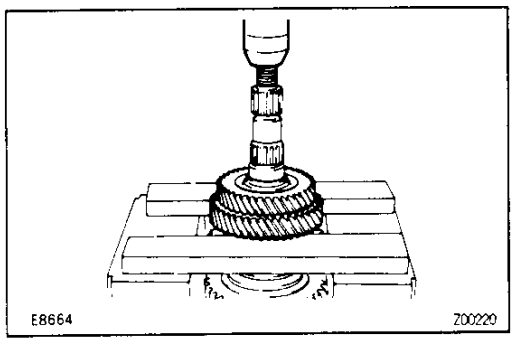

4. REMOVE 3RD DRIVEN GEAR AND 2ND GEAR

Using a press, remove the 3rd driven gear and 2nd gear.

5. REMOVE NEEDLE ROLLER BEARING, SPACER AND SYNCHRONIZER RINGS

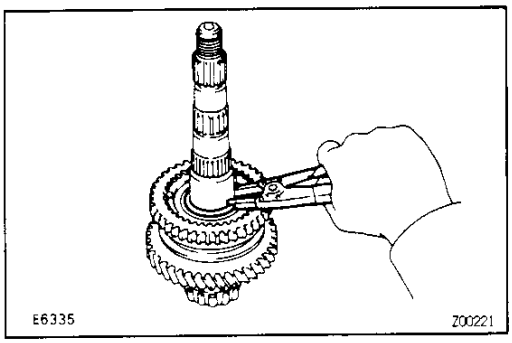

6. REMOVE SNAP RING

Using a snap ring expander, remove the snap ring.

Downloaded from www.Manualslib.com manuals search engine

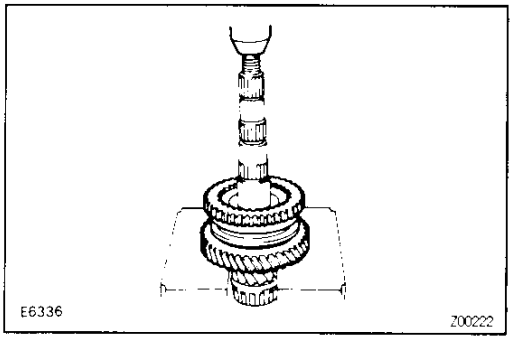

7. **REMOVE NO.1 HUB SLEEVE ASSEMBLY AND 1ST GEAR**
   Using a press, remove the No.1 hub sleeve and 1st gear.
8. **REMOVE SYNCHRONIZER RING AND NEEDLE ROLLER BEARING**

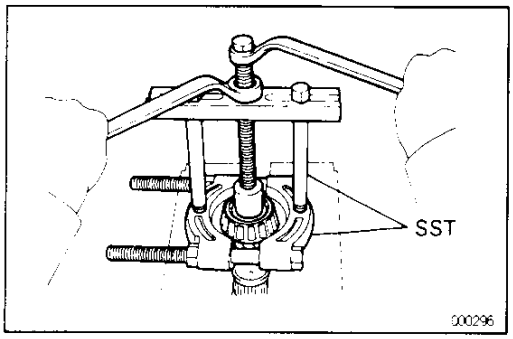

9. **REMOVE OUTPUT SHAFT FRONT BEARING**
   Using SST, remove the output shaft front bearing.
   SST 09950–00020, 09950–00030

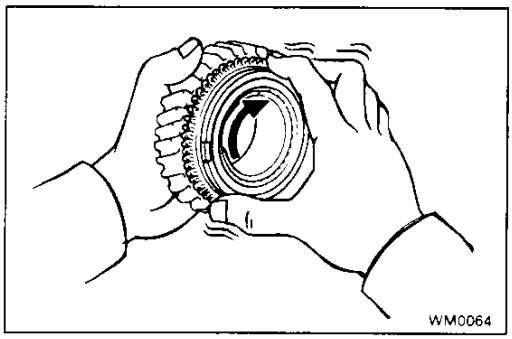

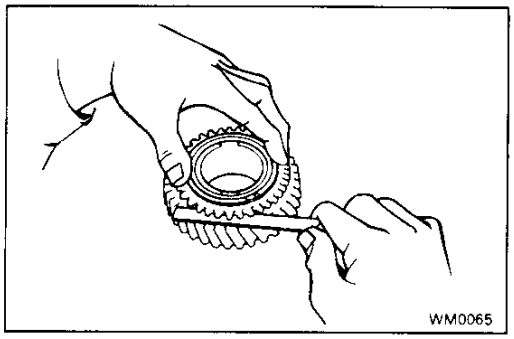

OUTPUT SHAFT COMPONENT PARTS INSPECTION

MX01C-03

1. **INSPECT 1ST GEAR SYNCHRONIZER RING**

(a) Check for wear or damage.

(b) Check the braking effect of the synchronizer ring.
Turn the synchronizer ring in one direction while pushing it to the gear cone. Check that the ring locks.
If the braking effect is insufficient, apply a small amount of fine lapping compound between the synchronizer ring and gear cone.
Lightly rub the synchronizer ring and gear cone together.
NOTICE: Ensure the fine lapping compound is completely washed off after rubbing.

(c) Check again the braking effect of the synchronizer ring.

(d) Measure the clearance between the synchronizer ring back and gear spline end.
Minimum clearance:
0.6 mm (0.024 in.)
If the clearance is less than the limit, replace the synchronizer ring and gear cone by applying a small amount of fine lapping compound.
NOTICE: Ensure the fine lapping compound is completely washed off after rubbing.

Downloaded from www.Manualslib.com manuals search engine

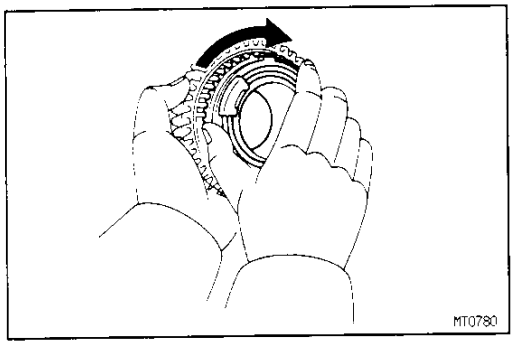

2. INSPECT 2ND GEAR SYNCHRONIZER RING

(a) Check for wear or damage.

(b) Check the braking effect of the synchronizer direction while pushing it to the gear cone. Check that the ring locks.
If it does not lock, replace the synchronizer ring.

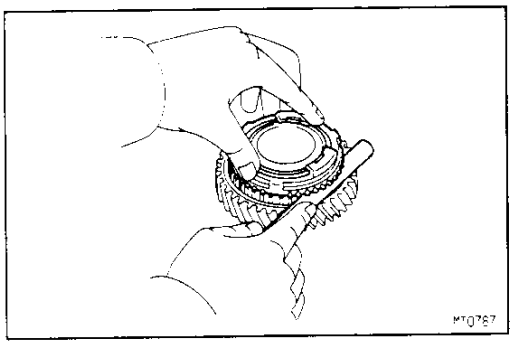

(c) Measure the clearance between the synchronizer ring back and gear spline end.
Minimum clearance:
0.7 mm (0.028 in.)
If the clearance is less than the limit, replace the synchronizer ring.

MX

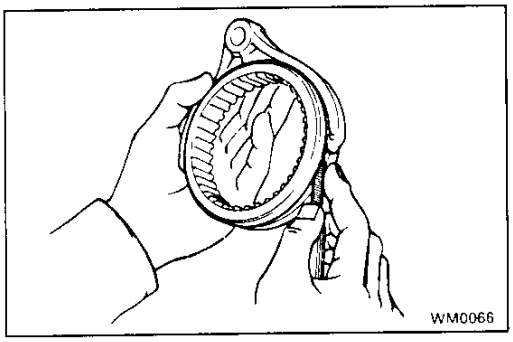

3. MEASURE NO.1 SHIFT FORK AND HUB SLEEVE CLEARANCE

Using a feeler gauge, measure the clearance between the hub sleeve and shift fork.
Maximum clearance:
1.0 mm (0.039 in.)
If the clearance exceeds the limit, replace the shift fork or hub sleeve.

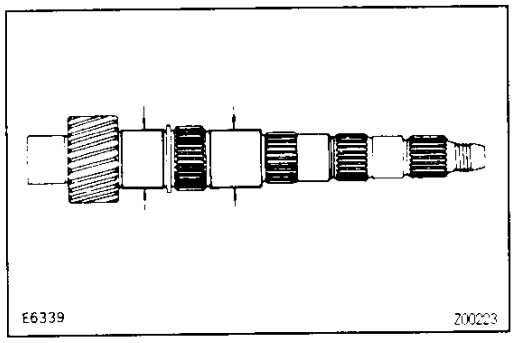

4. INSPECT OUTPUT SHAFT

(a) Check the output shaft for wear or damage.

(b) Using a micrometer, measure the outer diameter of the output shaft journal surface.
Minimum outer diameter:
38.950 mm (1.5335 in.)

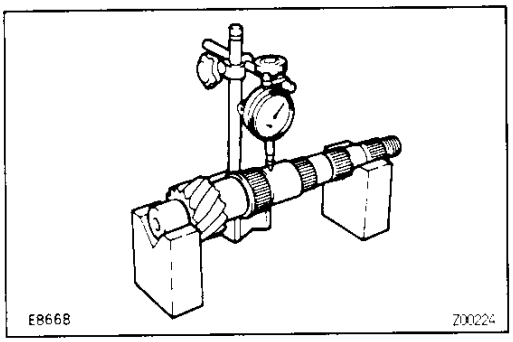

(c) Using a dial indicator, check the shaft runout.
Maximum runout:
0.06 mm (0.0024 in.)

Downloaded from www.Manualslib.com manuals search engine

MX01D-03

OUTPUT SHAFT ASSEMBLY

(See page MX–40)

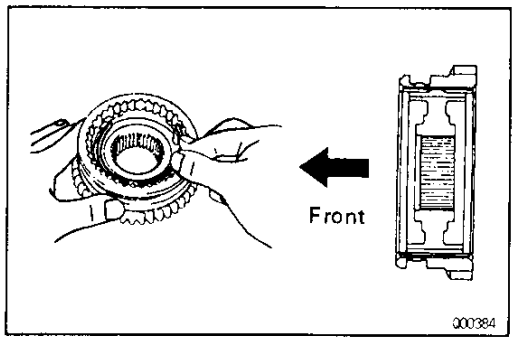

HINT: Coat all of the sliding and rotating surfaces with gear oil before assembly.

1. INSTALL NO.1 CLUTCH HUB INTO HUB SLEEVE

(a) Install the clutch hub and shifting keys to the hub sleeve.

(b) Install the shifting key springs under the shifting keys.
NOTICE: Install the key springs positioned so that their ends are not in line.

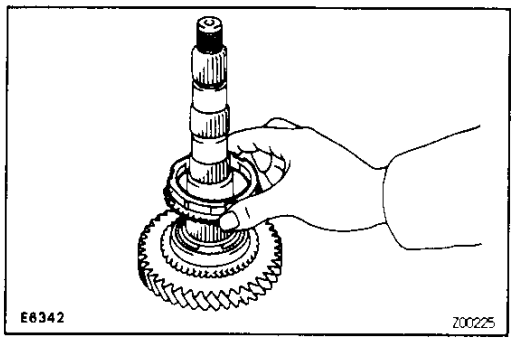

2. INSTALL NEEDLE ROLLER BEARING, 1ST GEAR, SYNCHRONIZER RING AND NO.1 HUB SLEEVE TO OUTPUT SHAFT

(a) Apply MP grease to the needle roller bearing.

(b) Install the 1st gear.

(c) Place the synchronizer ring (for 1st gear) on the gear and align the ring slots with the shifting keys.

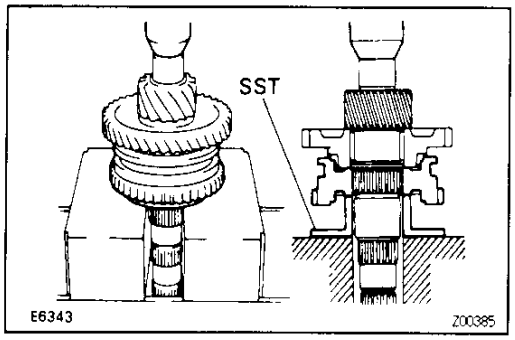

(d) Using SST and a press, install the 1st gear and No.1 hub sleeve.
SST 09316–60010 (09316–00040)

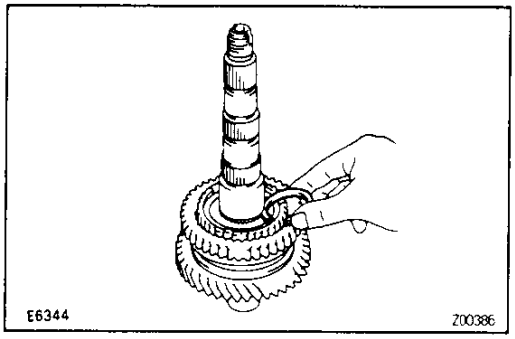

3. INSTALL SNAP RING

(a) Select a snap ring that will allow minimum axial play.

Mark	Thickness mm (in.)	Mark	Thickness mm (in.)
A	2.80 (0.1102)	E	3.00 (0.1181)
B	2.85 (0.1122)	F	3.05 (0.1201)
C	2.90 (0.1142)	G	3.10 (0.1220)
D	2.95 (0.1161)	–	–

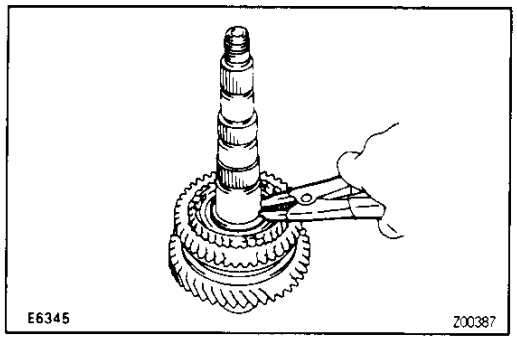

(b) Using a snap ring expander, install the snap ring.

Downloaded from www.Manualslib.com manuals search engine

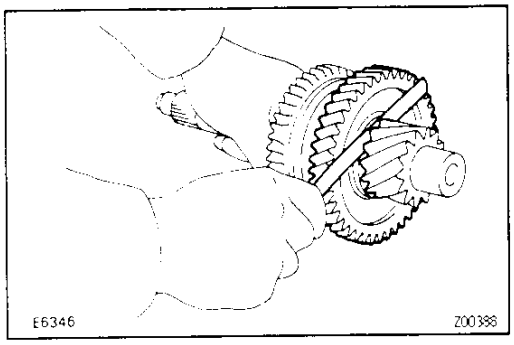

4. MEASURE 1ST GEAR THRUST CLEARANCE

Using a feeler gauge, measure the 1st gear thrust clearance.

Standard clearance:

0.10 – 0.35 mm (0.0039 – 0.0138 in.)

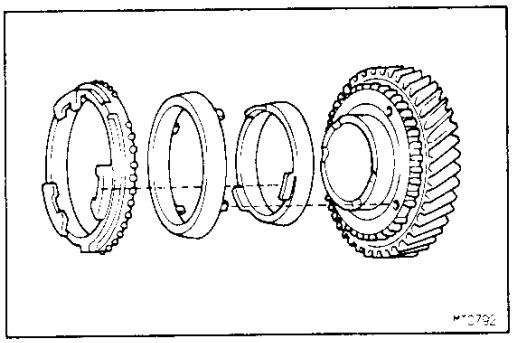

5. INSTALL SPACER, NEEDLE ROLLER BEARING, SYNCHRONIZER RINGS, 2 ND GEAR AND 3 RD DRIVEN GEAR

MX

(a) Install the spacer.

(b) Apply MP grease to the needle roller bearing.

(c) Place the synchronizer rings (for 2nd gear) on the gear.

NOTICE: Do not install the synchronizer ring for the 1st gear.

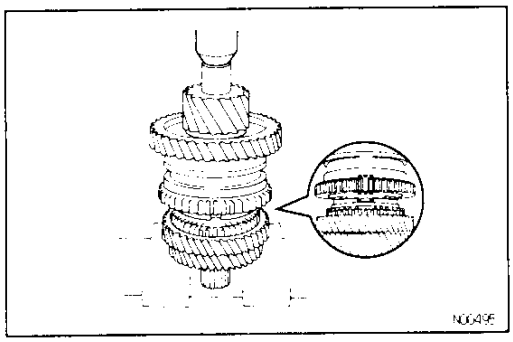

(d) Install the 2nd gear.

(e) Using a press, install the 3rd driven gear.

NOTICE: Align the clutch hub grooves with the projections on the synchronizer ring.

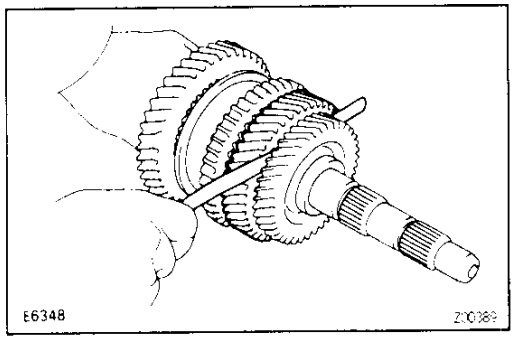

6. MEASURE 2ND GEAR THRUST CLEARANCE

Using a feeler gauge, measure the 2nd gear thrust clearance.

Standard clearance:

0.10 – 0.45 mm (0.0039 – 0.0177 in.)

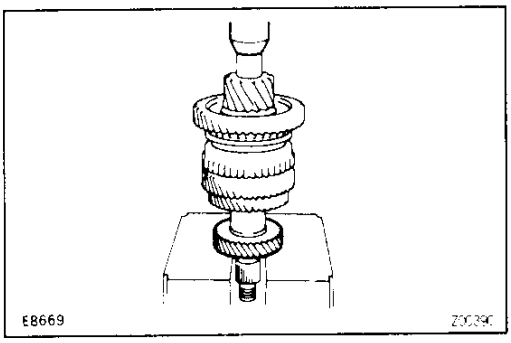

7. INSTALL SPACER AND 4TH DRIVEN GEAR

(a) Install the spacer.

(b) Using a press, install the 4th driven gear.

Downloaded from www.Manualslib.com manuals search engine

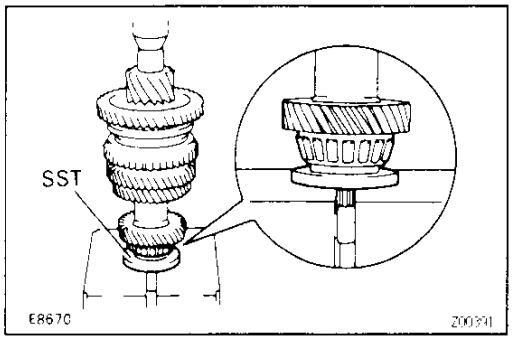

8. INSTALL OUTPUT SHAFT REAR BEARING

Using SST and a press, install the bearing.
SST 09506–30012

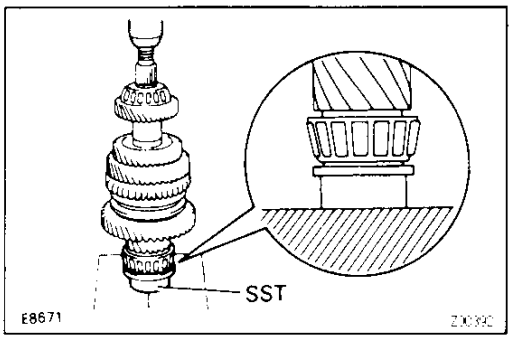

9. INSTALL OUTPUT SHAFT FRONT BEARING

Using SST and a press, install a new output shaft front bearing.
SST 09316–60010 (09316–00070)

MX

Downloaded from www.Manualslib.com manuals search engine

OIL PUMP
COMPONENTS

MX01E-02

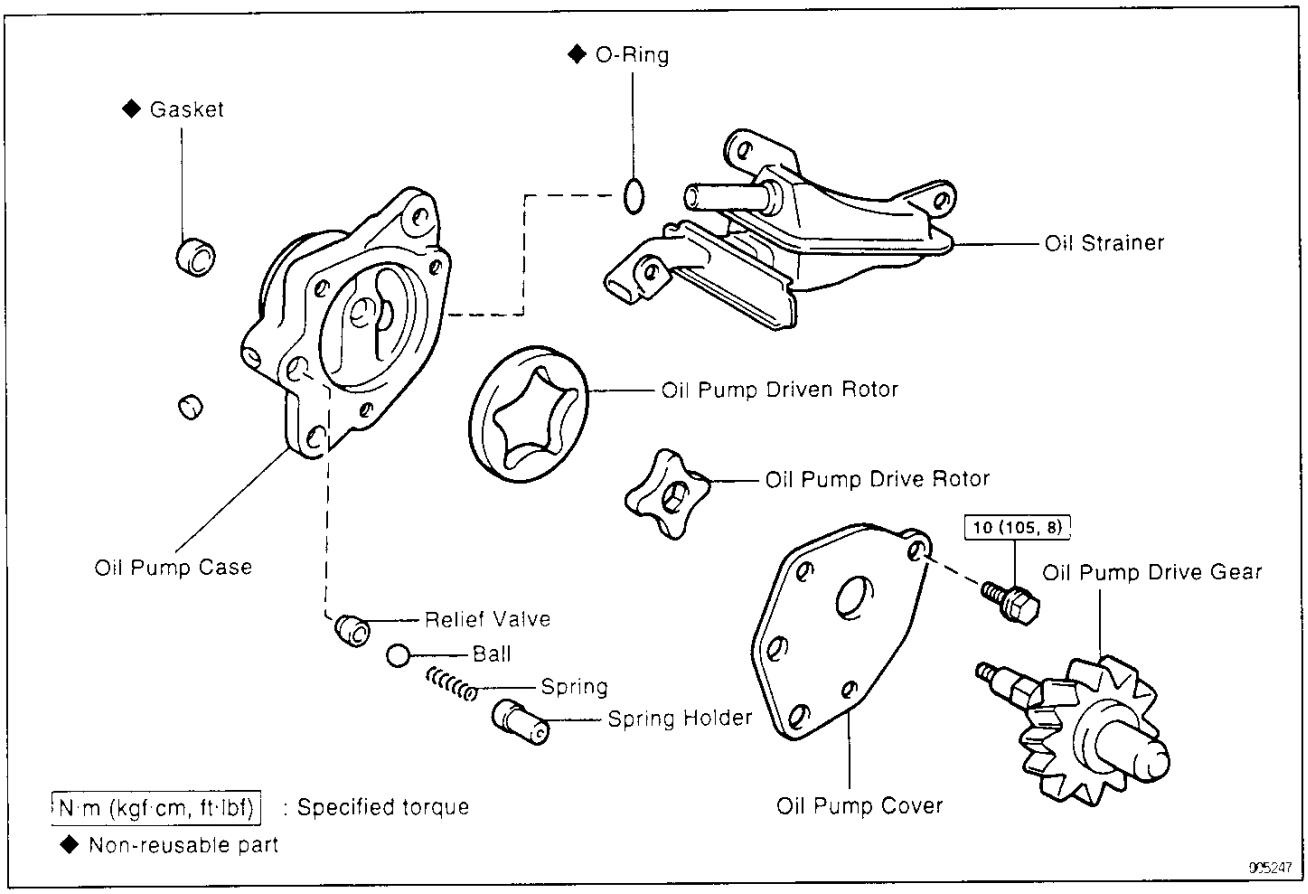

MX

MX01F-04

OIL PUMP DISASSEMBLY

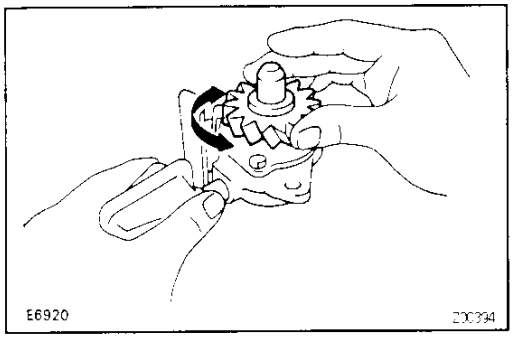

1. CHECK OPERATION OF OIL PUMP

Install the oil pump drive gear to the drive rotor, check that the drive rotor turns smoothly.

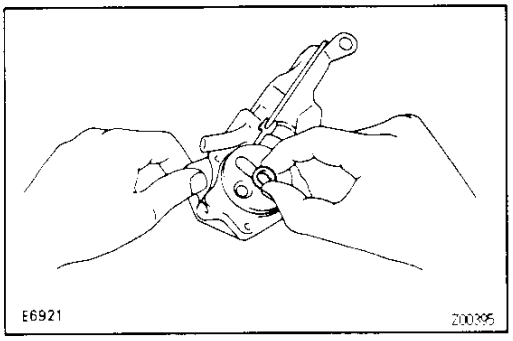

2. REMOVE GASKET FROM OIL PUMP CASE

Downloaded from www.Manualslib.com manuals search engine

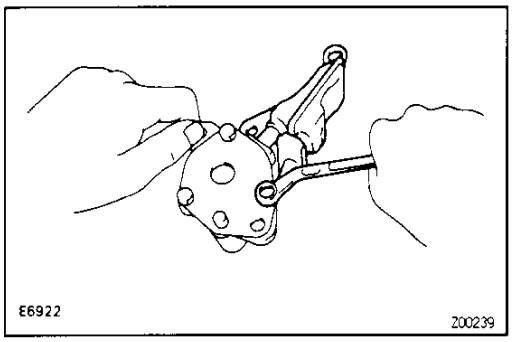

3. REMOVE OIL STRAINER SET BOLT

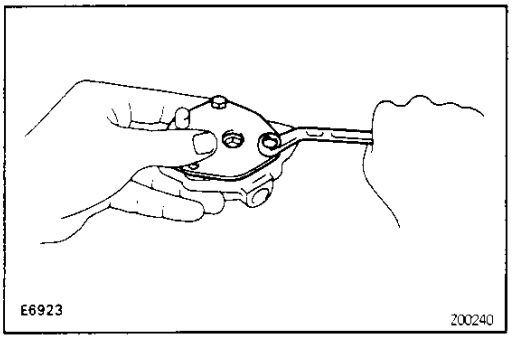

4. REMOVE OIL PUMP COVER

(a) Hold the pump cover, remove the 2 bolts and cover.

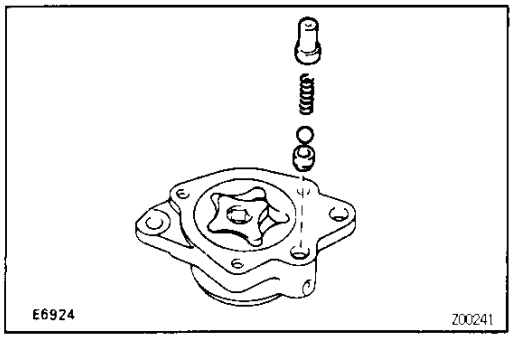

(b) Remove the spring holder, spring, ball and relief valve seat.

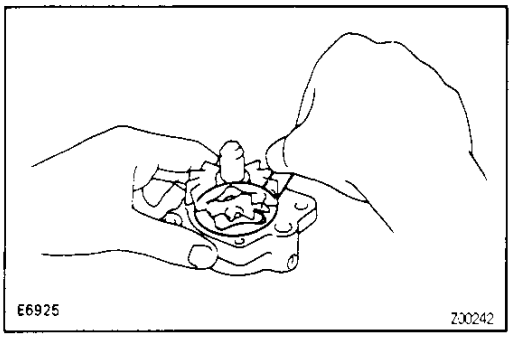

5. CHECK ROTOR BODY CLEARANCE

(a) Install the oil pump drive gear to the drive rotor.

(b) Using a feeler gauge, measure the body clearance between the drive rotor and oil pump case.

Standard clearance:

0.10 — 0.16 mm (0.0039 — 0.0063 in.)

Maximum clearance:

0.30 mm (0.0118 in.)

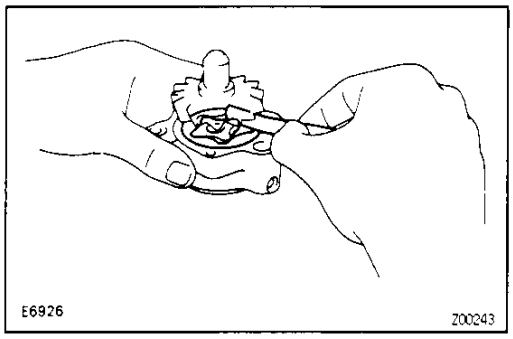

6. CHECK ROTOR TIP CLEARANCE

(a) Install the oil pump drive gear to the drive rotor.

(b) Using a feeler gauge, measure the tip clearance between the drive and driven rotors.

Standard clearance:

0.08 — 0.15 mm (0.0031 — 0.0059 in.)

Maximum clearance:

0.30 mm (0.0118 in.)

Downloaded from www.Manualslib.com manuals search engine

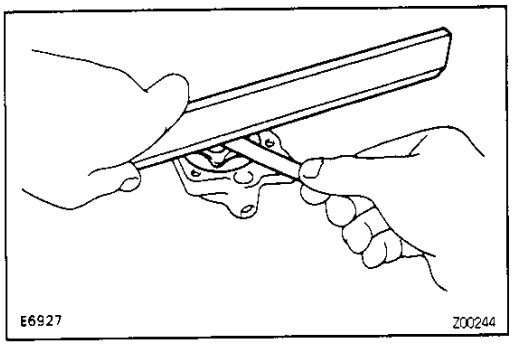

7. CHECK SIDE CLEARANCE

Using a precision straight edge and feeler gauge, measure the side clearance of both rotors.

Standard clearance:

0.03 – 0.08 mm (0.0012 – 0.0031 in.)

Maximum clearance:

0.15 mm (0.0059 in.)

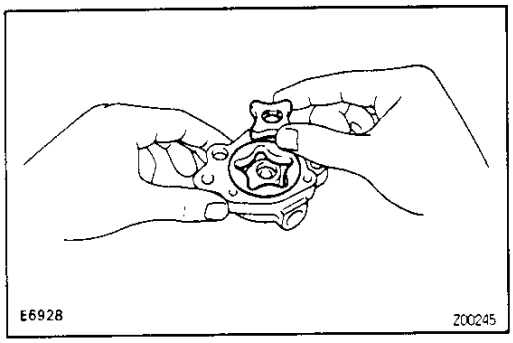

8. REMOVE OIL PUMP DRIVE ROTOR AND DRIVEN ROTOR

MX

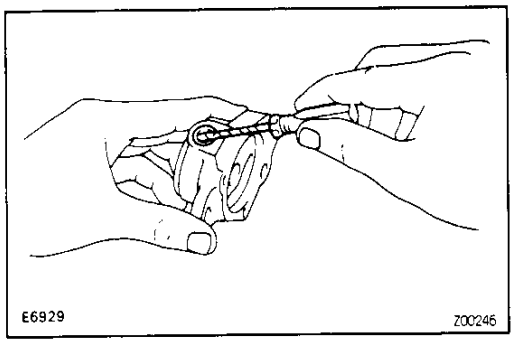

9. IF NECESSARY, REPLACE O–RING

(a) Using a screwdriver, remove the O–ring.

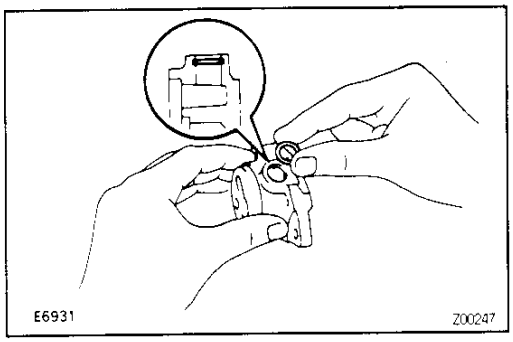

(b) Apply gear oil to a new O–ring.

(c) Install the O–ring.

MX01G-02

OIL PUMP ASSEMBLY

(See page MX–47)

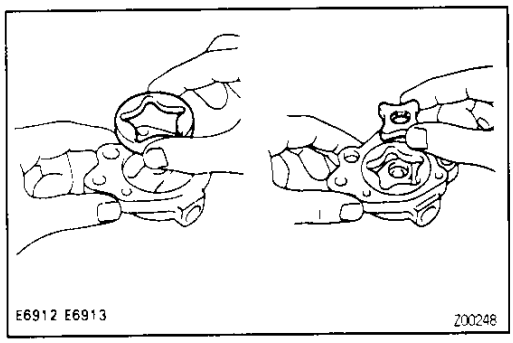

1. INSTALL DRIVEN ROTOR AND DRIVE ROTOR

Downloaded from www.Manualslib.com manuals search engine

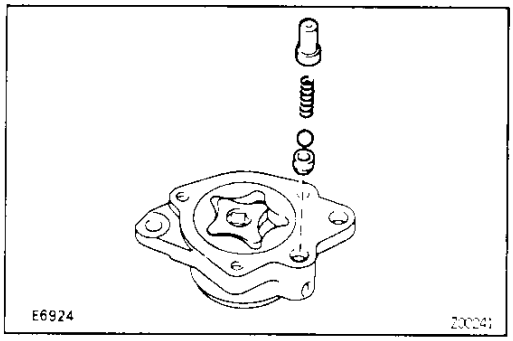

2. INSTALL OIL PUMP COVER

(a) Install the relief valve, ball, spring and spring holder to the oil pump case.

MX

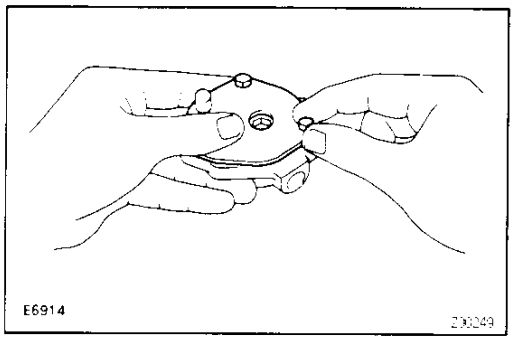

(b) Hold the oil pump cover, temporarily install the 2 bolts.

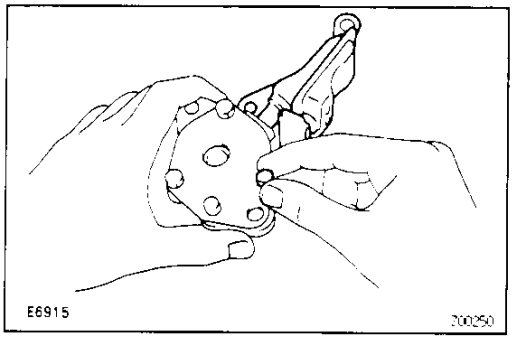

3. INSTALL OIL STRAINER

Install the oil strainer to the oil pump case, temporarily install the bolt.

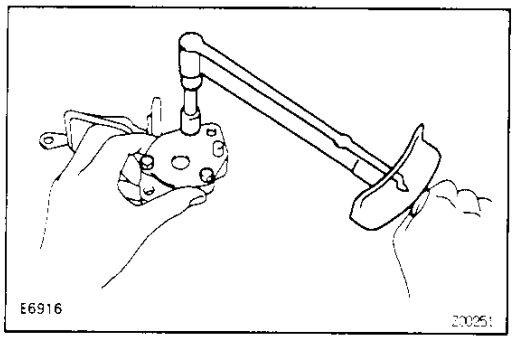

4. TORQUE OIL PUMP COVER BOLTS

Torque the 3 bolts evenly.

Torque: 10 N·m (105 kgf·cm, 8 ft·lbf)

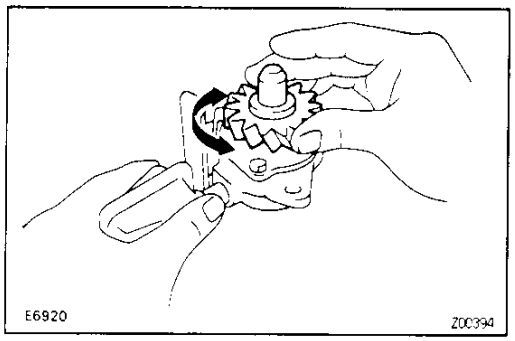

5. CHECK OPERATION OF OIL PUMP

Install the oil pump drive gear to the drive rotor, check that the drive rotor turns smoothly.

Downloaded from www.Manualslib.com manuals search engine

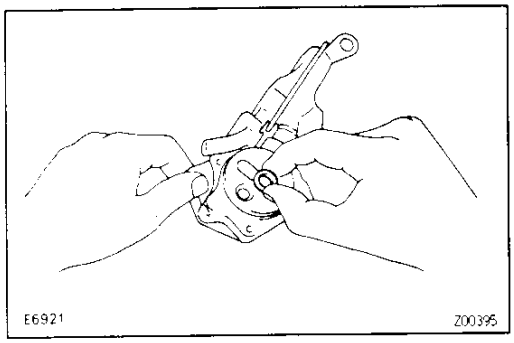

6. INSTALL GASKET

Install a new gasket to the oil pump case.

Downloaded from www.Manualslib.com manuals search engine

SHIFT AND SELECT LEVER SHAFT

MX01H-01

COMPONENTS

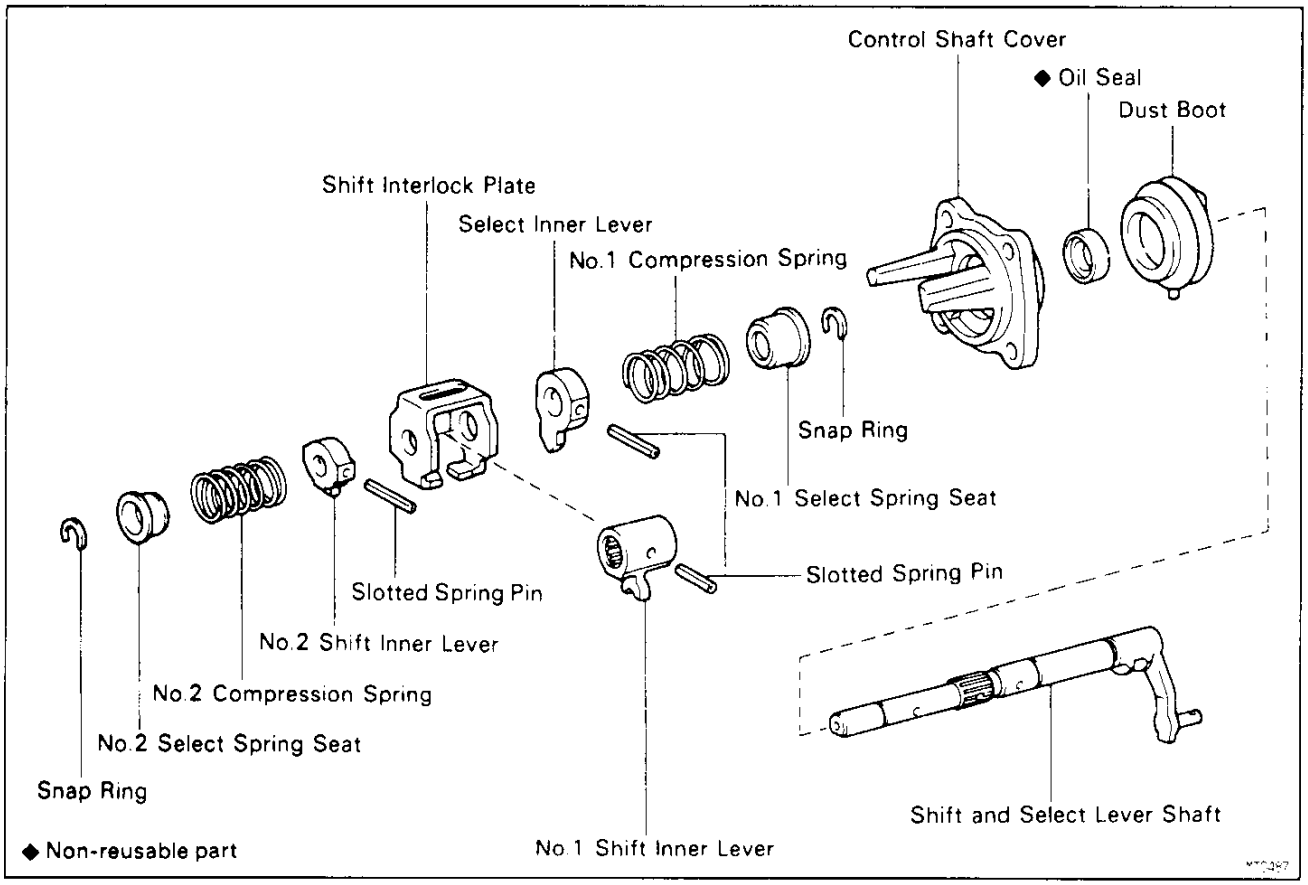

MX01J-03

SHIFT AND SELECT LEVER SHAFT DISASSEMBLY

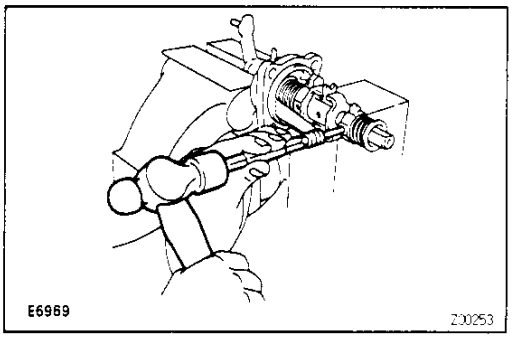

1. REMOVE NO.2 SHIFT INNER LEVER

(a) Using a pin punch and hammer, drive out the slotted spring pin.

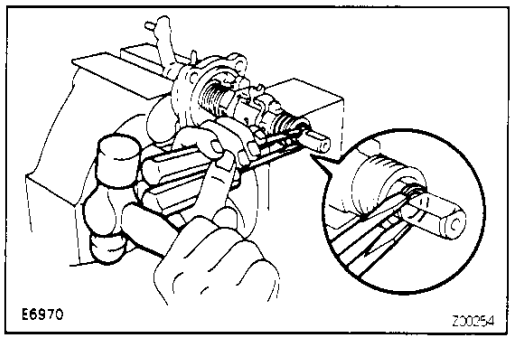

(b) Using 2 screwdrivers and a hammer, remove the snap ring.

Downloaded from www.Manualslib.com manuals search engine

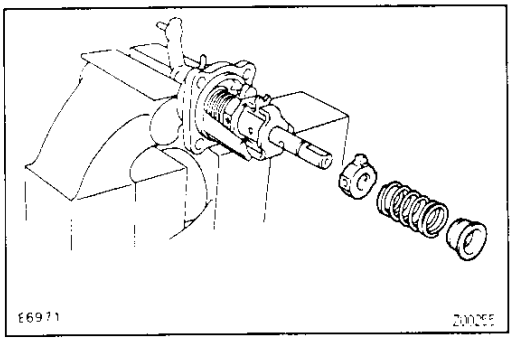

(c) Remove the No.2 select spring seat, No.2 compression spring and No.2 shift inner lever.

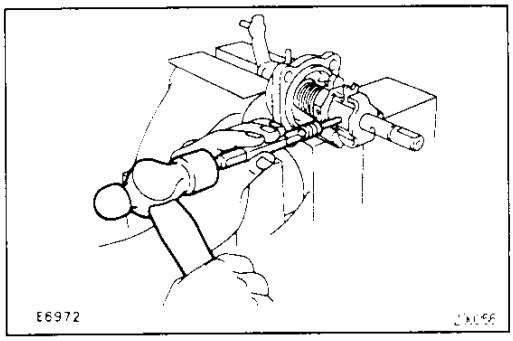

2. REMOVE SHIFT INTERLOCK PLATE AND NO. 1 SHIFT INNER LEVER

(a) Using a pin punch and hammer, drive out the slotted spring pin.

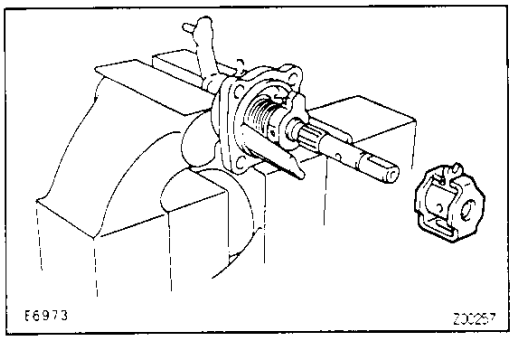

(b) Remove the shift interlock plate and No.1 shift inner lever.

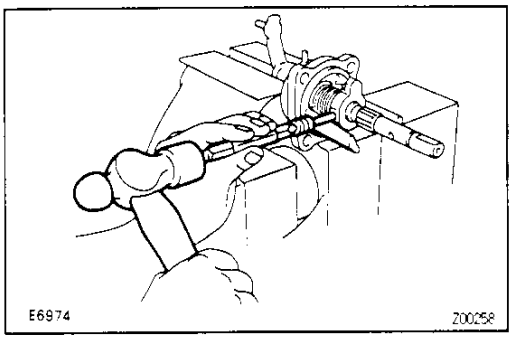

3. REMOVE SELECT INNER LEVER

(a) Using a pin punch and hammer, drive out the slotted spring pin.

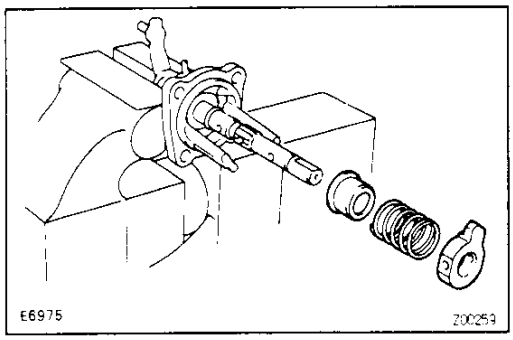

(b) Remove the select inner lever, No. 1 compression spring and No.1 select spring seat.

Downloaded from www.Manualslib.com manuals search engine

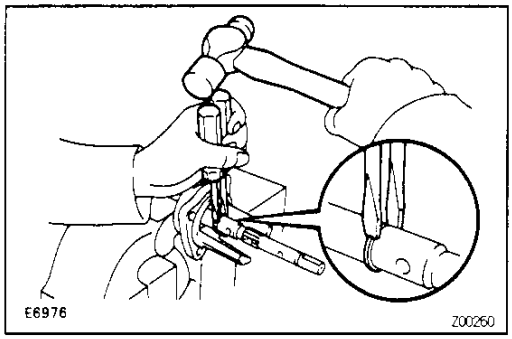

4. REMOVE SNAP RING

Using 2 screwdrivers and a hammer, remove the snap ring.

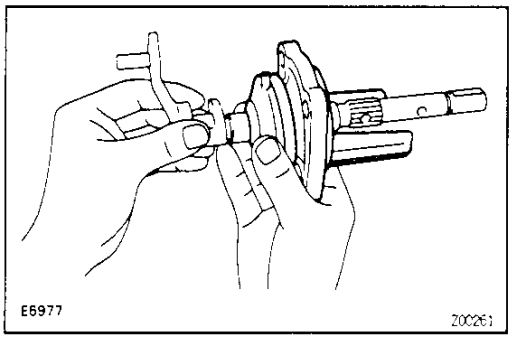

5. REMOVE CONTROL SHAFT COVER AND DUST BOOT

(a) Remove the control shaft with dust boot from the shaft.

(b) Remove the dust boot from the control shaft cover.

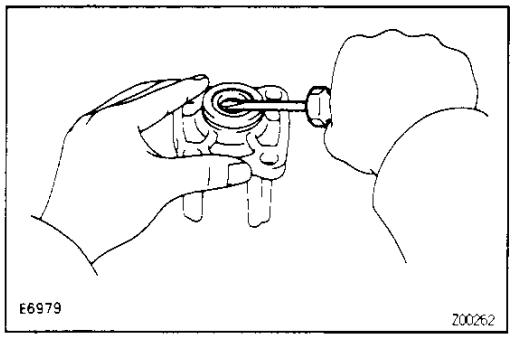

6. IF NECESSARY, REPLACE CONTROL SHAFT COVER OIL SEAL

(a) Using a screwdriver, pry out the oil seal.

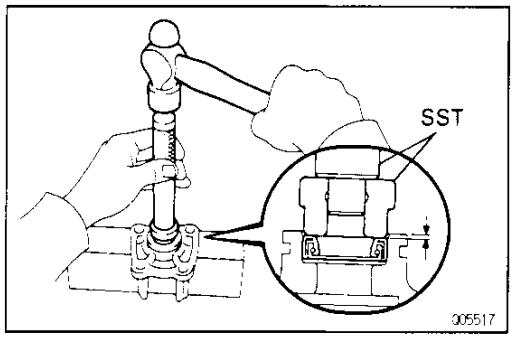

(b) Using SST and a hammer, drive in a new oil seal.
SST 09620–30010 (09627–30010, 09631–00020)
Drive in depth:
0 – 1.0 mm (0 – 0.039 in.)

(c) Coat the oil seal lip with MP grease.

Downloaded from www.Manualslib.com manuals search engine

MX020-03

SHIFT AND SELECT LEVER SHAFT ASSEMBLY

(See page MX–52)

1. **COAT SHAFT WITH MP GREASE, AS SHOWN**

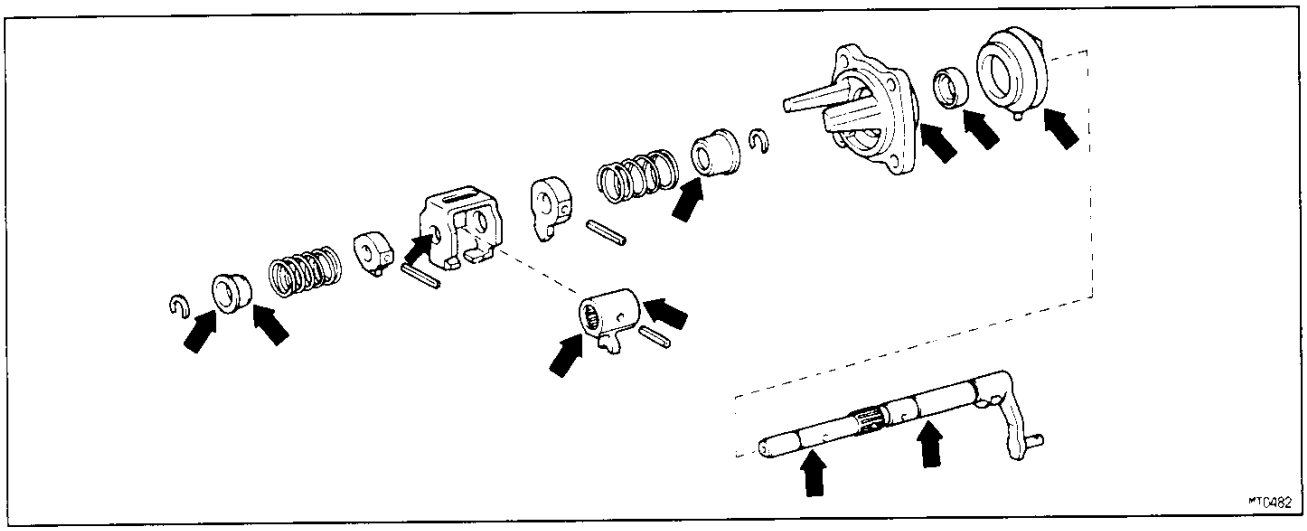

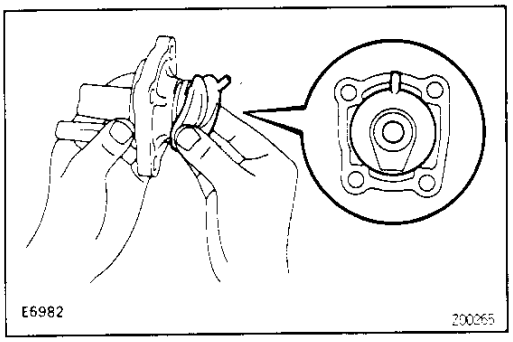

2. **INSTALL DUST BOOT AND CONTROL SHAFT COVER**

(a) Install the dust boot to the control shaft cover as shown.

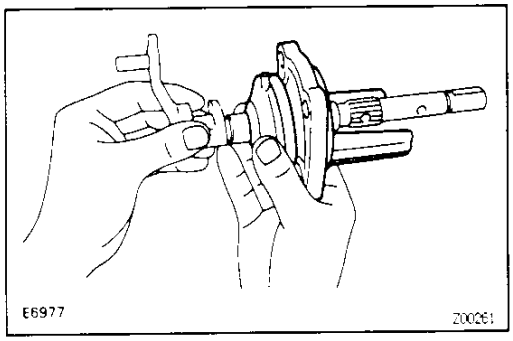

(b) Install the control shaft to the control shaft cover.

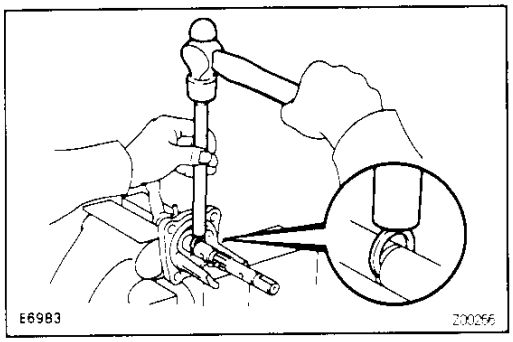

3. **INSTALL SNAP RING**

Using a brass bar and hammer, install the snap ring.

Downloaded from www.Manualslib.com manuals search engine

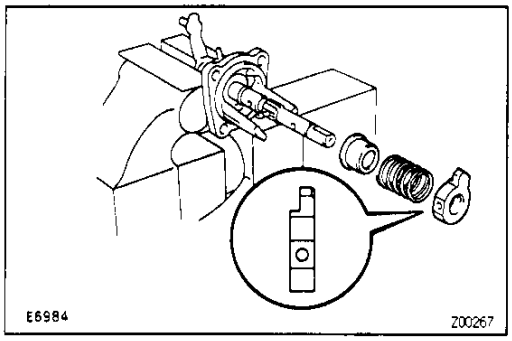

4. INSTALL SELECT INNER LEVER

(a) Install the No.1 select spring seat, No.1 compression spring and select inner lever.

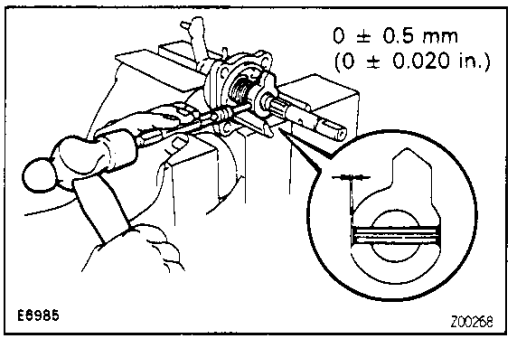

(b) Using a pin punch and hammer, drive in the slotted spring pin.
Drive in depth:
0 ± 0.5 mm (0 ± 0.020 in.)

(c) Check that the No.1 select spring seat slides smoothly.

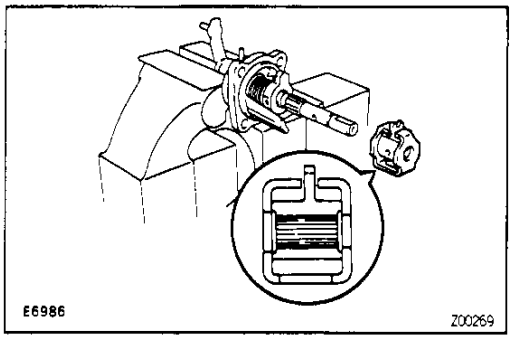

5. INSTALL SHIFT INTERLOCK PLATE AND NO. 1 SHIFT INNER LEVER

(a) Install the shift interlock plate and No.1 shift inner lever as shown.

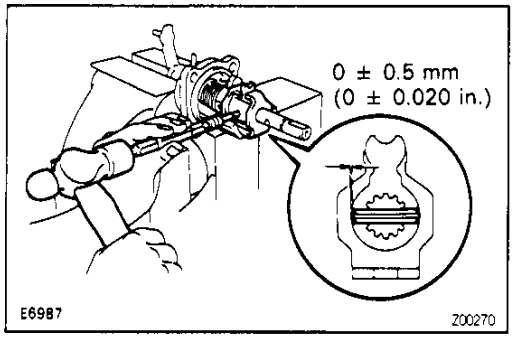

(b) Using a pin punch and hammer, drive in the slotted spring pin.
Drive in depth:
0 ± 0.5 mm (0 ± 0.020 in.)

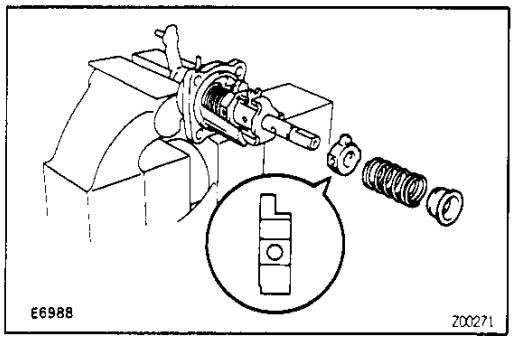

6. INSTALL NO.2 SHIFT INNER LEVER

(a) Install the No.2 shift inner lever, No.2 compression spring and No.2 select spring seat.

Downloaded from www.Manualslib.com manuals search engine

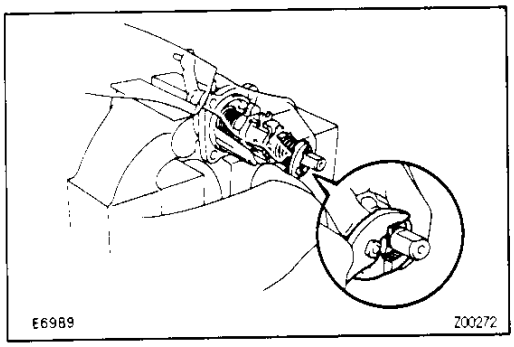

(b) Compress the spring and install the snap ring with pliers.

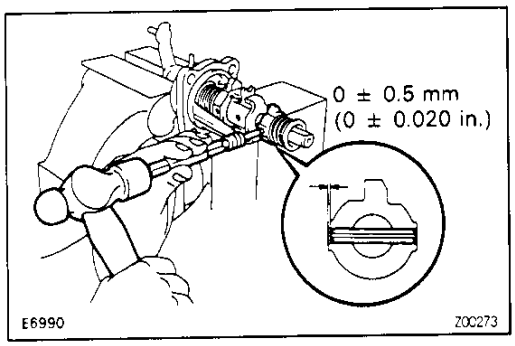

(c) Using a pin punch and hammer, drive in the slotted spring pin.

Drive in depth:

0 ± 0.5 mm (0 ± 0.020 in.)

(d) Check that the No.2 select spring seat slides smoothly.

MX

Downloaded from www.Manualslib.com manuals search engine

DIFFERENTIAL CASE
COMPONENTS

MX01K-07

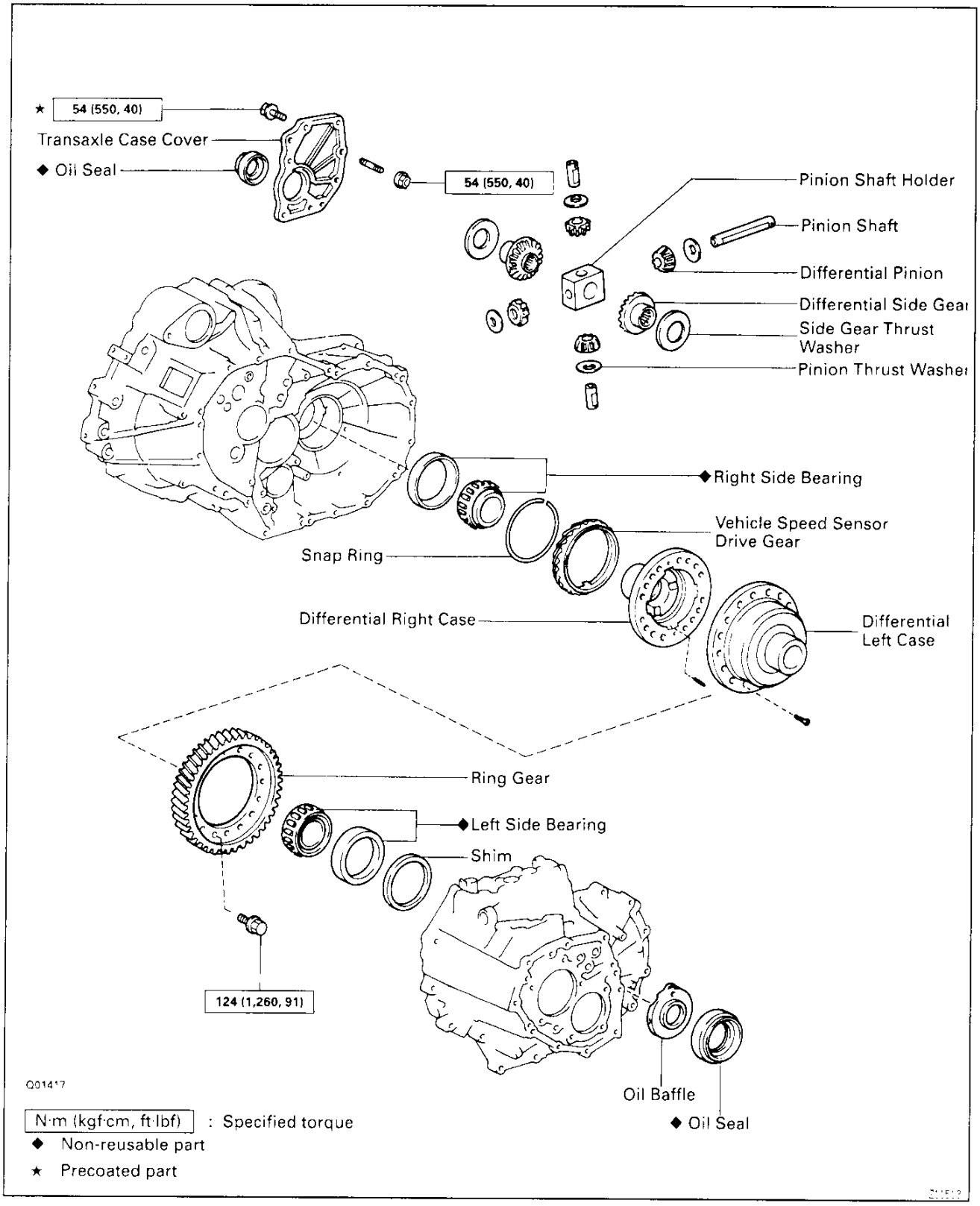

Downloaded from www.Manualslib.com manuals search engine

MX050-04

DIFFERENTIAL CASE DISASSEMBLY

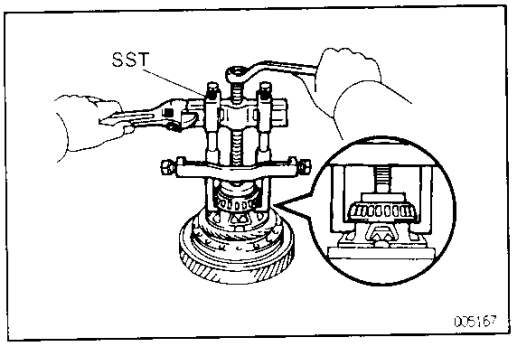

1. REMOVE SIDE BEARING

(a) Using SST, remove the RH side bearing.
SST 09950–40010

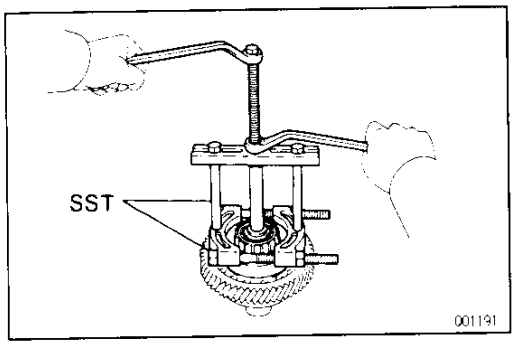

(b) Using SST, remove the LH side bearing.
SST 09950–00020, 09950–00030

MX

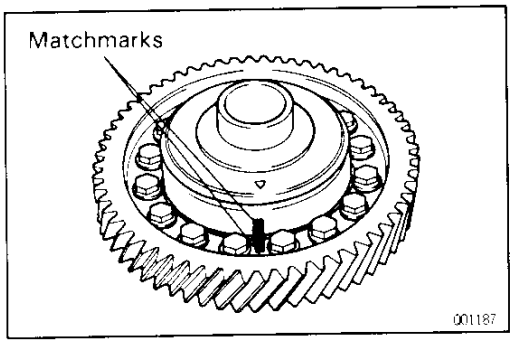

2. REMOVE RING GEAR

(a) Place matchmarks on both the differential case and ring gear.

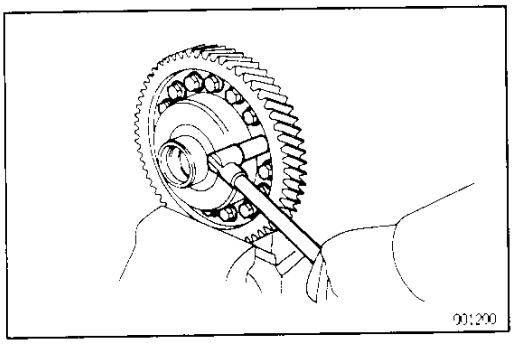

(b) Remove the 16 bolts.

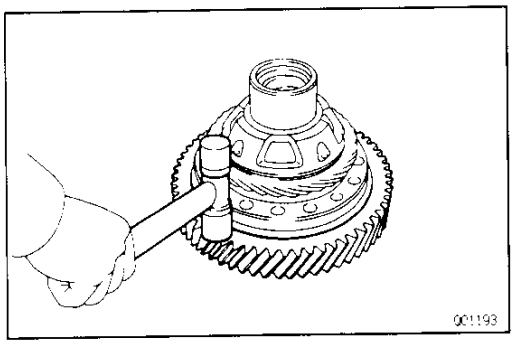

(c) Using a plastic hammer, tap out the ring gear.

Downloaded from www.Manualslib.com manuals search engine

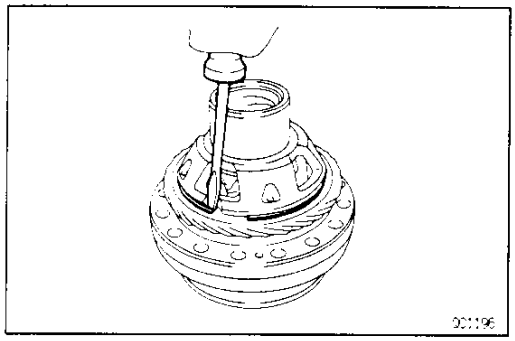

3. REMOVE VEHICLE SPEED SENSOR DRIVE GEAR

(a) Using a screwdriver, remove the snap ring.

(b) Remove the vehicle speed sensor drive gear.

MX

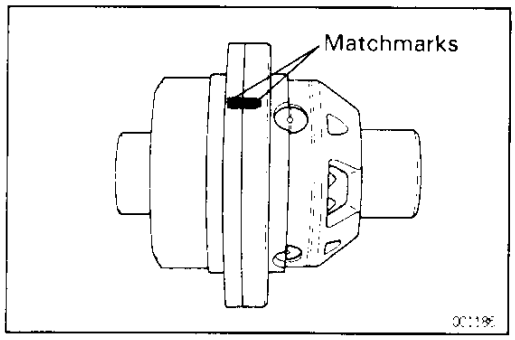

4. DISASSEMBLE DIFFERENTIAL CASE

(a) Place matchmarks on the differential right and left case.

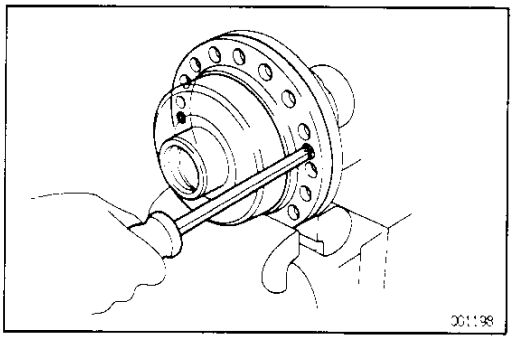

(b) Remove the 2 screws.

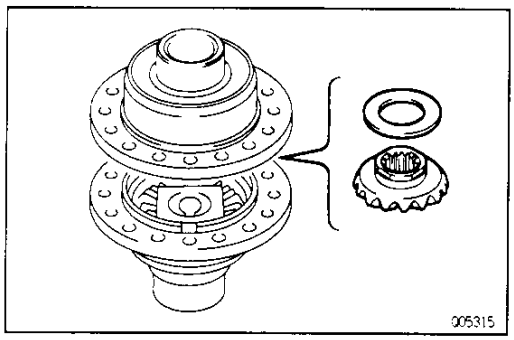

(c) Disassemble the differential case, side gear and thrust washer.

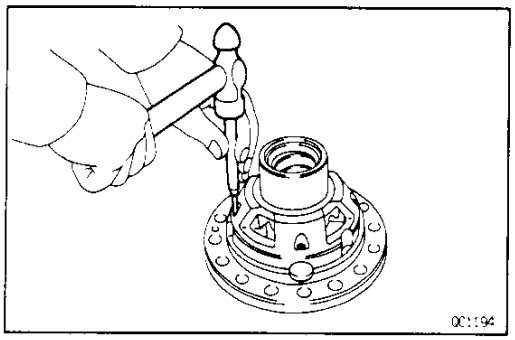

(d) Using a pin punch, drive out the 3 slotted spring pins.

Downloaded from www.Manualslib.com manuals search engine

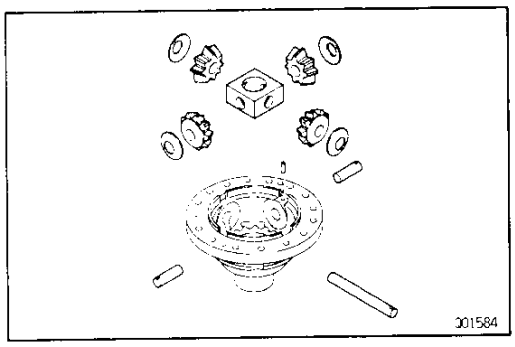

(e) Remove the 3 pinion shafts, 4 pinion gears, 4 pinion washers and shaft holder.

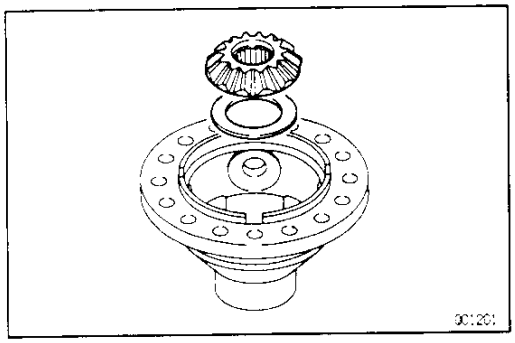

(f) Remove the side gear and thrust washer from the differential right case.

MX

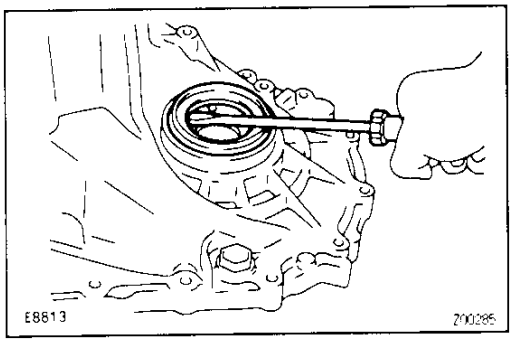

5. TRANSMISSION CASE SIDE:
IF NECESSARY, REPLACE OIL SEAL AND TAPER ROLLER BEARING OUTER RACE

(a) Using a screwdriver, remove the oil seal.

(b) Remove the transmission oil baffle.

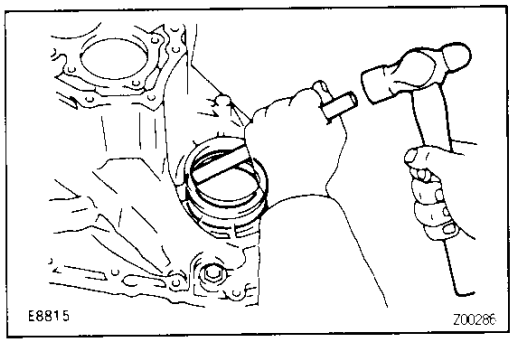

(c) Using a brass bar and hammer, drive out the bearing outer race lightly and evenly.

(d) Remove the shim.

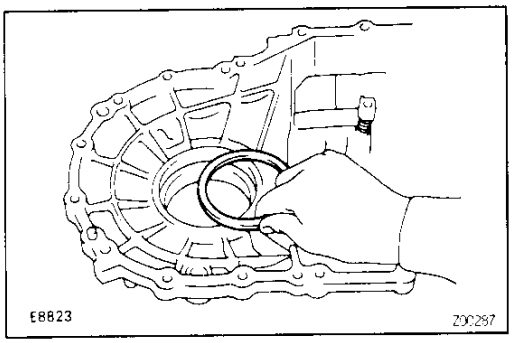

(e) Install the shim.
(See page MX–58)
HINT: First select and install a shim of lesser thickness than before.

Downloaded from www.Manualslib.com manuals search engine

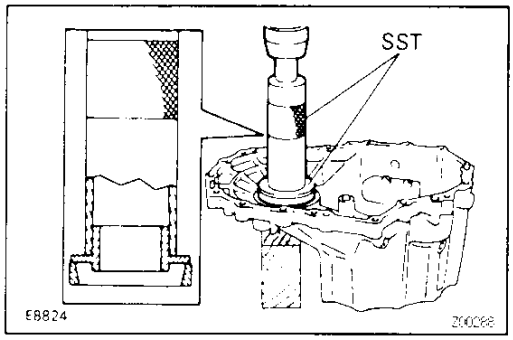

(f) Using SST and a press, install a new taper roller bearing outer race.
SST 09316–60010 (09316–00010, 09316–00040)

MX

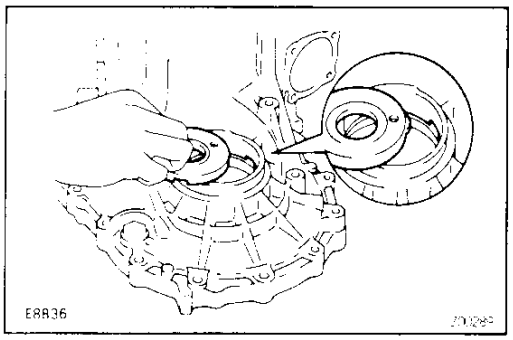

(g) Install the transmission oil baffle.
HINT: Install the transmission oil baffle protection into the case side cutout.

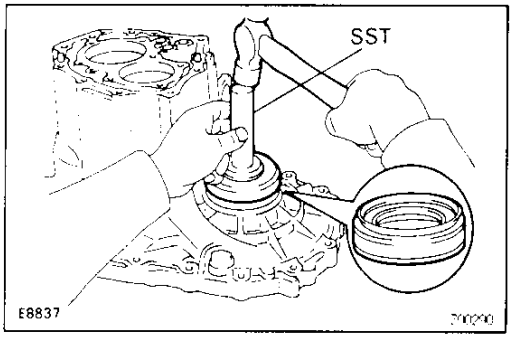

(h) Using SST and a hammer, drive in a new oil seal.
SST 09223–15010
(i) Coat the lip of oil seal with MP grease.

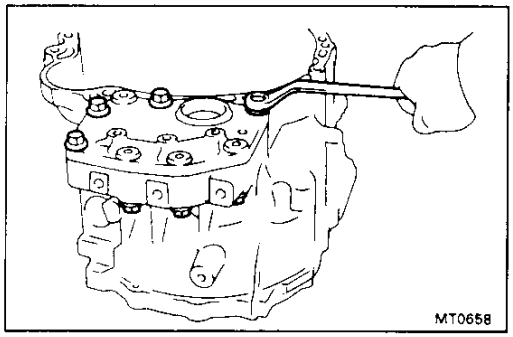

6. TRANSAXLE CASE SIDE:
IF NECESSARY, REPLACE OIL SEAL AND TAPER ROLLER BEARING OUTER RACE

(a) Remove the 4 bolts and 3 nuts.

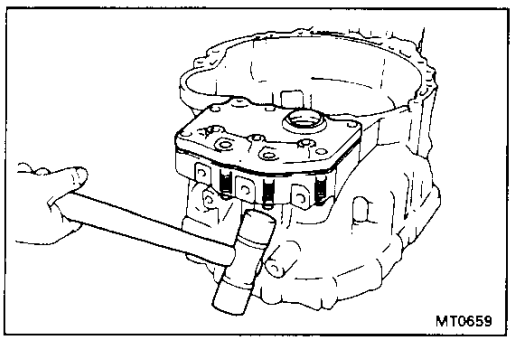

(b) Using a plastic hammer, tap the stud bolts and remove the transaxle case cover.

Downloaded from www.Manualslib.com manuals search engine

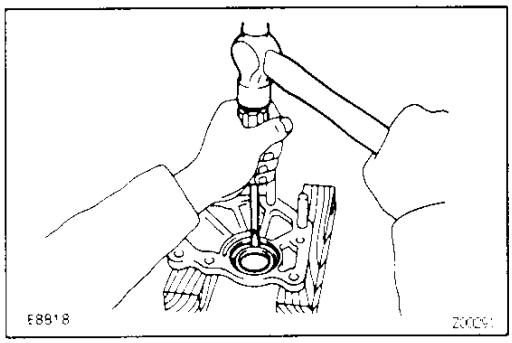

(c) Using a screwdriver and hammer, drive out the oil seal.

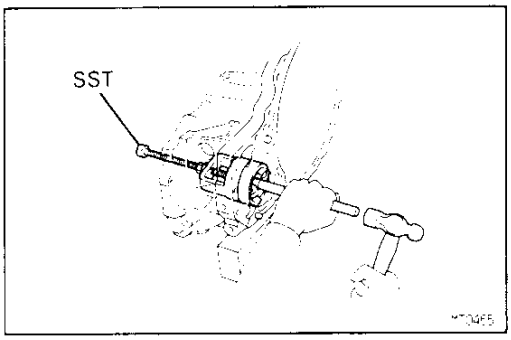

(d) Using SST, a brass bar and hammer, remove the taper roller bearing outer race.
SST 09612–65014

MX

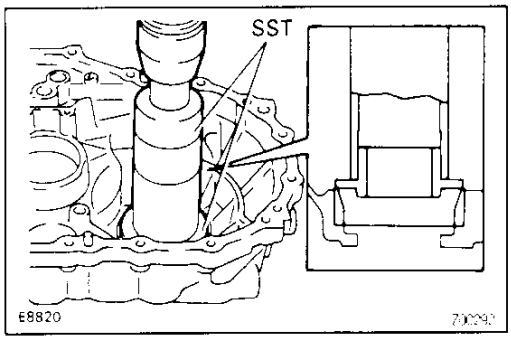

(e) Using SST and a hammer, install a new taper roller bearing outer race.
SST 09316–60010 (09316–00010, 09316–00040)

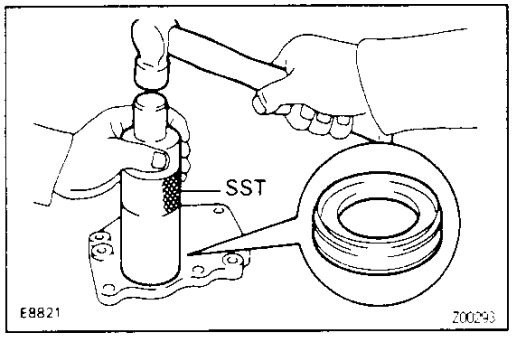

(f) Using SST and a hammer, drive in a new oil seal.
SST 09316–60010 (09316–00010)

(g) Coat the oil seal lip with MP grease.

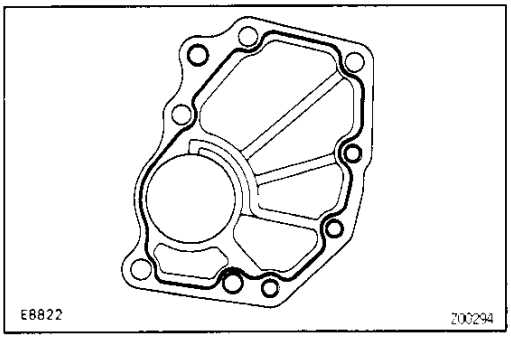

(h) Remove the FIPG material and be careful not to drop oil on the contacting surfaces of the transaxle case or case cover.

(i) Apply FIPG to the transaxle case cover, as shown.
FIPG:

Part No.08826–00090, THREE BOND 1281 or equivalent

HINT: Install the transaxle case cover, as the FIPG is applied.

Downloaded from www.Manualslib.com manuals search engine

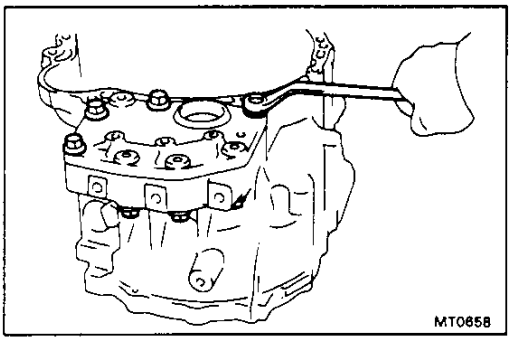

(j) Apply sealant to the bolt threads.
Sealant:
Part No.08833–00080, THREE BOND 1344, LOCTITE 242 or equivalent

(k) Install and torque the 4 bolts and 3 nuts.
Torque: 54 N·m (550 kgf·cm, 40 ft·lbf)

Downloaded from www.Manualslib.com manuals search engine

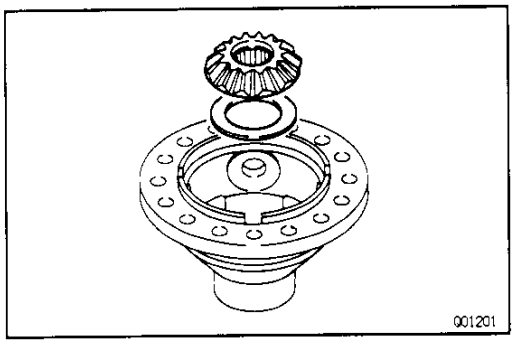

DIFFERENTIAL CASE ASSEMBLY

(See page MX–58)

1. ASSEMBLE DIFFERENTIAL CASE

HINT: Coat all of the sliding and rotating surfaces with gear oil before assembly.

(a) Install the thrust washer and differential side gear to the differential right case.

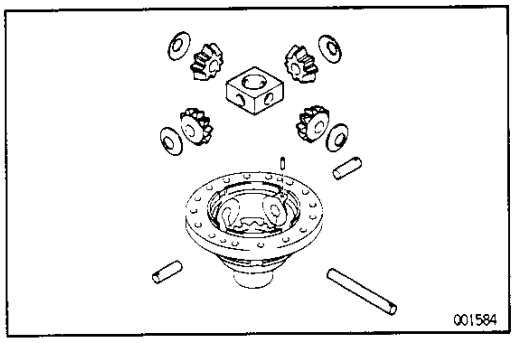

(b) Install the 3 pinion shafts, 4 pinions, 4 pinion washers and shaft holder.

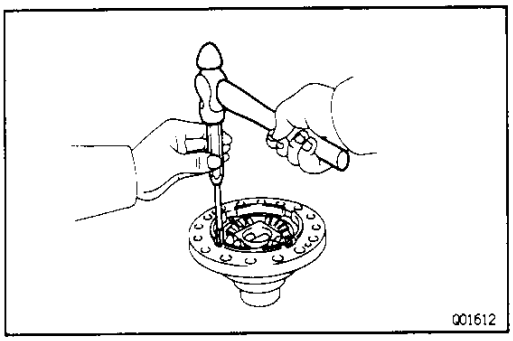

(c) Using a pin punch, drive in the 3 slotted spring pins to the differential right case.

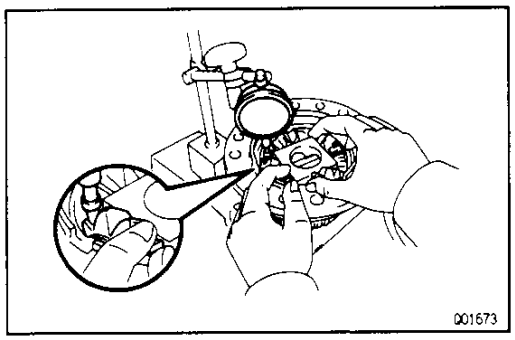

(d) Using a dial indicator, measure the backlash of pinion gear while holding the No.2 shaft holder.

Standard backlash:

0.05–0.20 mm (0.0020–0.0079 in.)

HINT: Push the pinion gear of the left side of the differential case.

(e) Install the side gear, pinion shafts and shaft holder with the 4 pinions to the right side of the differential case.

And check the side gear backlash.

(f) Referring to the table below, select the thrust washer which will ensure that the backlash is within specification. Try to select a washer of the same size.

Thickness mm (in.)	Thickness mm (in.)
0.80 (0.0315)	1.20 (0.0472)
0.90 (0.0354)	1.30 (0.0512)
1.00 (0.0394)	1.40 (0.0551)
1.10 (0.0433)	–

Downloaded from www.Manualslib.com manuals search engine

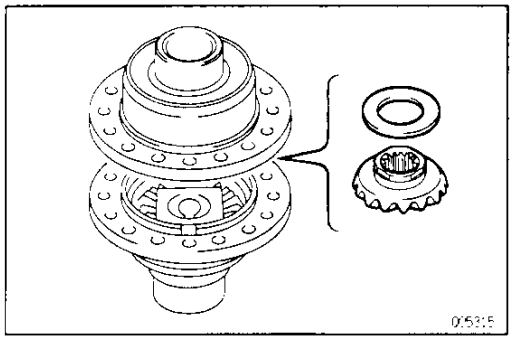

(g) Assemble the differential case, side gear and thrust washer.

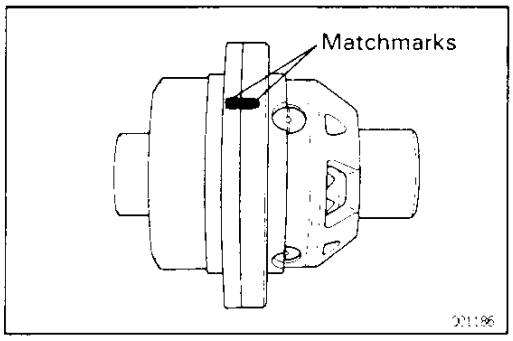

(h) Align the matchmarks on the differntial cases.

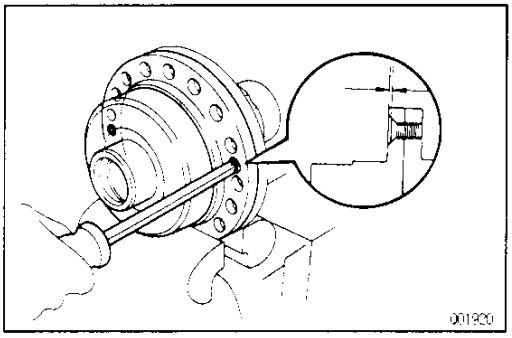

(i) Install and tighten the 2 screws.

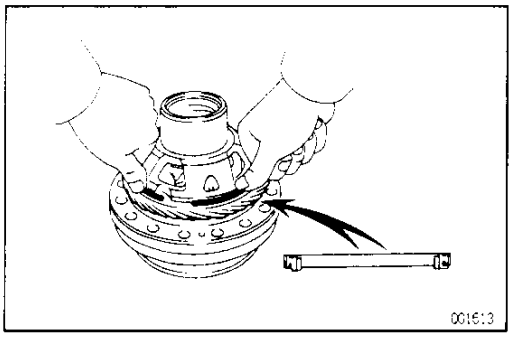

2. INSTALL VEHICLE SPEED SENSOR DRIVE GEAR

(a) Install the vehicle speed sensor drive gear to the differential right case.

(b) Install the snap ring.

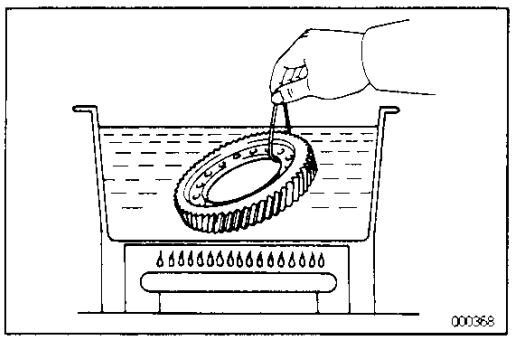

3. INSTALL RING GEAR

(a) Clean the contact surface of the differential case and the threads of the ring gear and differential case.

(b) Heat the ring gear in boiling water.

(c) Carefully remoe the ring gear from the water.

(d) After the moisture on the ring gear has completely evaporated, quickly install the ring gear to the differential case.

Downloaded from www.Manualslib.com manuals search engine

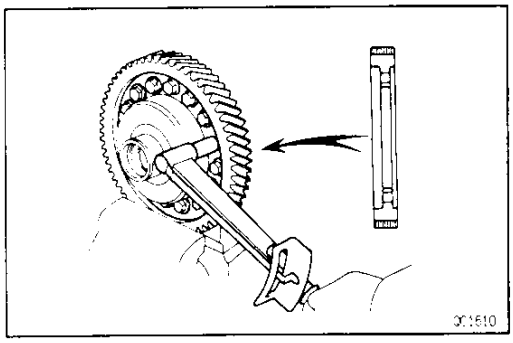

HINT: Align the matchmarks on the differential left case and contact the ring gear.

(e) Temporarily install the 16 bolts.

NOTICE: The ring gear set bolts should not be tightened until the ring gear has cooled sufficiently.

(f) After the ring gear has cooled sufficiently, torque the ring gear set bolts.

Torque: 124 N·m (1,260 kgf·cm, 91 ft·lbf)

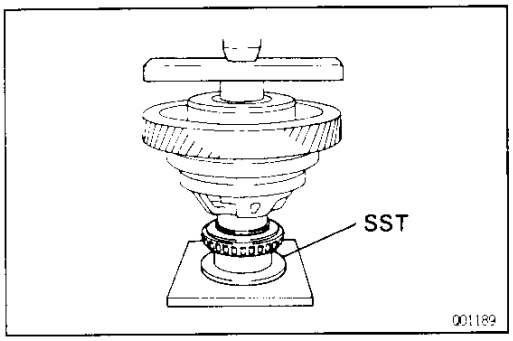

4. INSTALL SIDE BEARING

(a) Using SST and a press, install a new RH side bearing.

SST 09316–20011

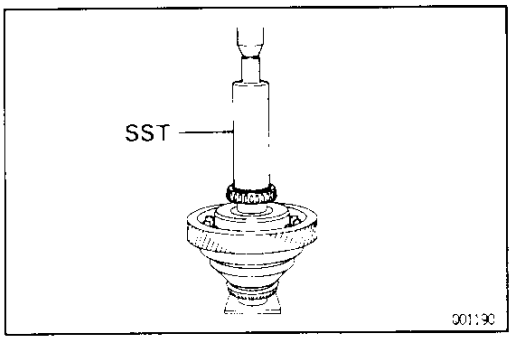

(b) Using SST and a press, install a new LH side bearing.
SST 09316–60010 (09316–00010)

5. ADJUST OUTPUT SHAFT ASSEMBLY PRELOAD
(See page MX–70)

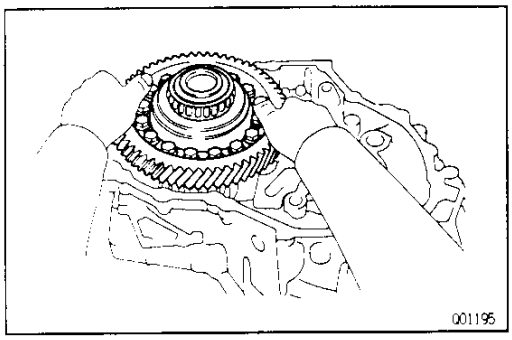

6. INSTALL DIFFERENTIAL CASE ASSEMBLY

Install the differential case assembly to the transaxle case.

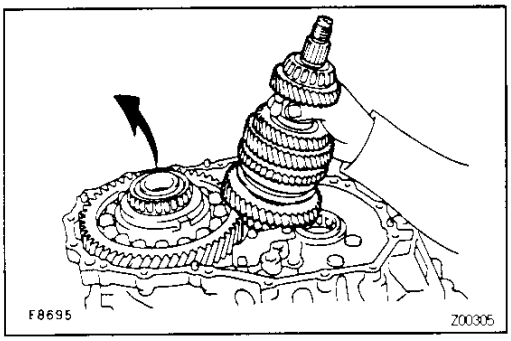

7. INSTALL OUTPUT SHAFT ASSMBLY

Lift up the differential case, install the input shaft assembly.

Downloaded from www.Manualslib.com manuals search engine

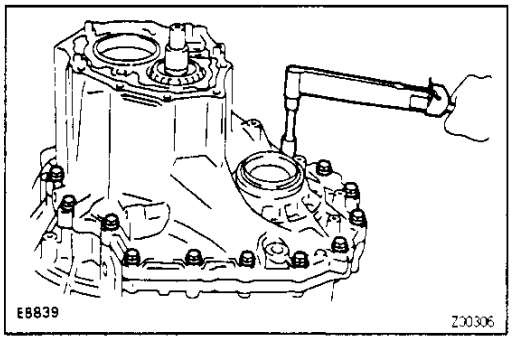

8. INSTALL TRANSMISSION CASE

(a) Install the transmission case.
HINT: If necessary, tap on the case with a plastic hammer.

(b) Install and torque the 17 bolts.
Torque: 29 N·m (300 kgf·cm, 22 ft·lbf)

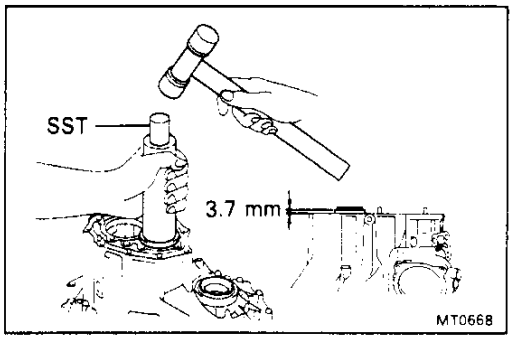

9. INSTALL OUTPUT SHAFT REAR TAPER ROLLER BEARING OUTER RACE

Using SST and a hammer, install a new output shaft rear taper roller bearing outer race.
SST 09316–60010 (09316–00010)

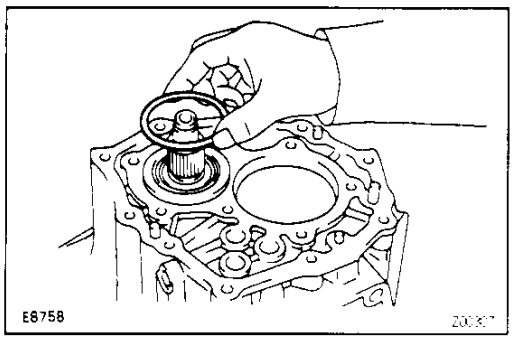

10. INSTALL SHIM

(See page MX–70 and MX–71)

HINT: Install the previously selected shim.

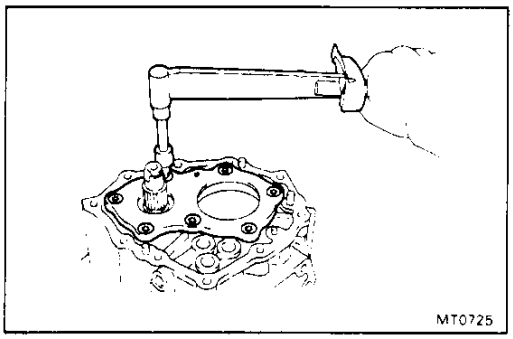

11. INSTALL REAR BEARING RETAINER

Using a torx wrench, install and torque the 7 torx screws.
(Torx wrench T45 09042–00050)
Torque: 42 N·m (430 kgf·cm, 31 ft·lbf)

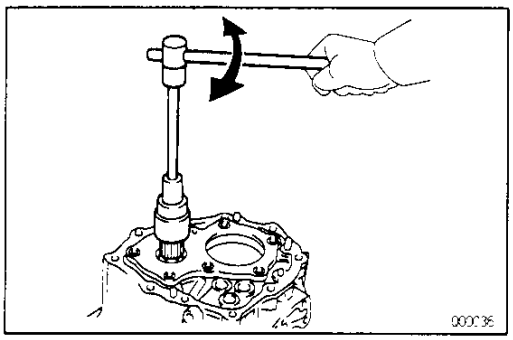

12. ADJUST DIFFERENTIAL CASE SIDE BEARING PRE-LOAD

(a) Install a new lock nut to the output shaft.

(b) Turn the output shaft right and left 2 or 3 times to allow the bearings to settle.

Downloaded from www.Manualslib.com manuals search engine

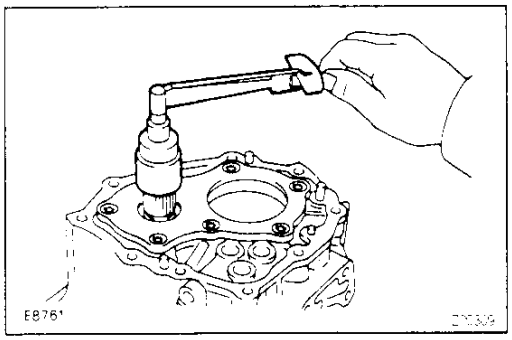

(c) Using a small torque wrench, measure the preload.

Preload (at starting):

New bearing (Add output shaft preload)

0.2 – 0.4 N·m (2.0 – 4.1 kgf·cm, 1.7 – 3.6 in.·lbf)

Reused bearing (Add output shaft preload)

0.1 – 0.2 N·m (1.3 – 2.5 kgf·cm, 1.1 – 2.2 in.·lbf)

If the preload is not within specification, select an appropriate adjusting shim.

HINT: The total preload will change about 0.1 – 0.2 N·m (1 – 2 kgf·cm, 0.9 – 1.7 ft·lbf) for every 0.05 mm change in adjusting shim thickness.

Mark	Thickness mm (in.)	Mark	Thickness mm (in.)
0	2.00 (0.0787)	9	2.45 (0.0965)
1	2.05 (0.0807)	A	2.50 (0.0984)
2	2.10 (0.0827)	B	2.55 (0.1004)
3	2.15 (0.0846)	C	2.60 (0.1024)
4	2.20 (0.0866)	D	2.65 (0.1043)
5	2.25 (0.0886)	E	2.70 (0.1063)
6	2.30 (0.0906)	F	2.75 (0.1083)
7	2.35 (0.0925)	G	2.80 (0.1102)
8	2.40 (0.0945)	H	2.85 (0.1122)

MX

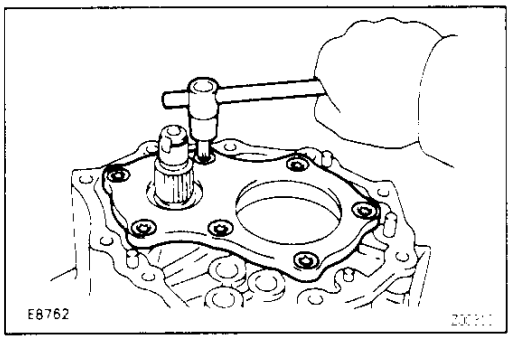

13. REMOVE REAR BEARING RETAINER

Using a torx wrench, remove the 7 torx screws and rear bearing retainer.

(Torx wrench T45 09042–00050)

14. REMOVE SHIM

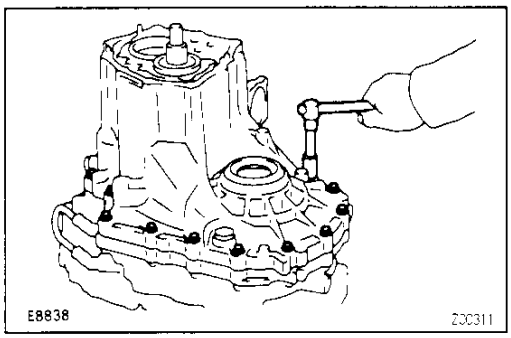

15. REMOVE TRANSMISSION CASE

(a) Remove the 17 bolts.

(b) Using a plastic hammer, tap the transmission case.

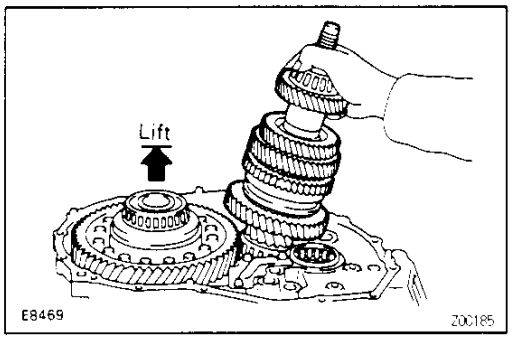

16. REMOVE OUTPUT SHAFT ASSEMBLY

17. REMOVE DIFFERENTIAL CASE ASSEMBLY

Downloaded from www.Manualslib.com manuals search engine

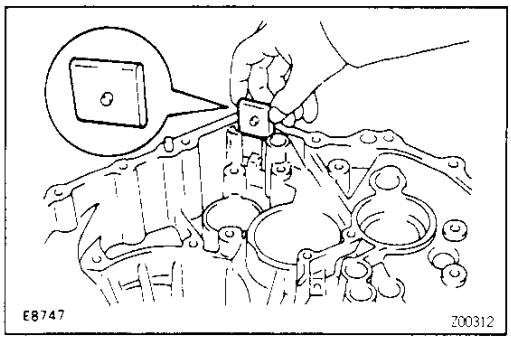

COMPONENT PARTS INSTALLATION

MX01M-07

BASIC SUBASSEMBLY REASSEMBLY

(See pages MX–17 to MX–19)

HINT: Coat all of the sliding and rotating surface with gear oil before assembly.

1. INSTALL MAGNET TO TRANSAXLE CASE

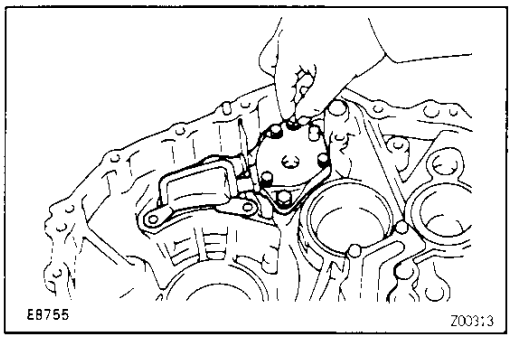

MX

2. INSTALL OIL PUMP ASSEMBLY AND OIL PIPE

(a) Install the oil pump assembly.

(b) Install the 2 bolts.

HINT: Be careful not to drop the oil pump gasket.

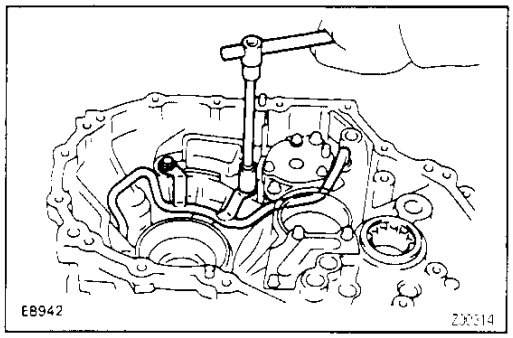

(c) Install the oil pipe and 2 bolts.

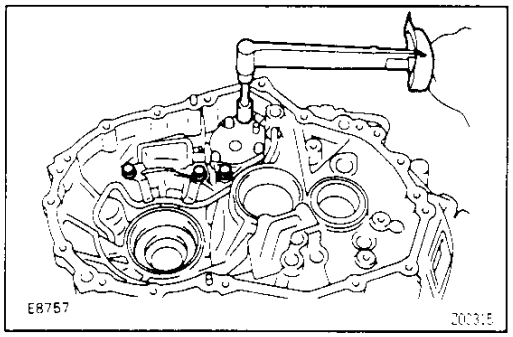

(d) Torque the 4 bolts.

Torque: 17 N·m (175 kgf·cm, 13 ft·lbf)

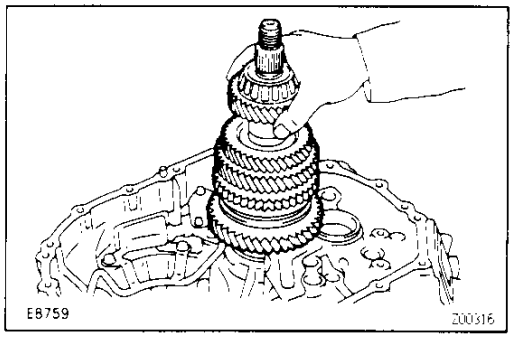

3. ADJUST OUTPUT SHAFT PRELOAD

(a) Install the output shaft assembly.

Downloaded from www.Manualslib.com manuals search engine

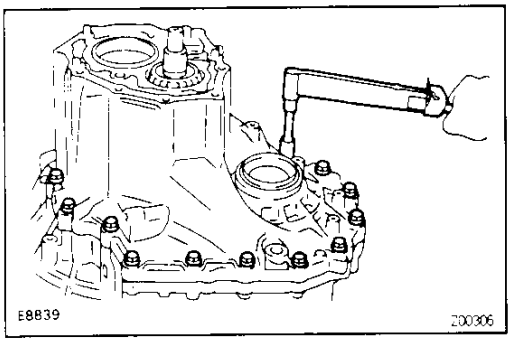

(b) Install the transmission case.
HINT: If necessary, tap on the case with a plastic hammer.

(c) Install and torque the 17 bolts.
Torque: 29 N·m (300 kgf·cm, 22 ft·lbf)

(d) Install the output shaft rear taper roller bearing outer race.

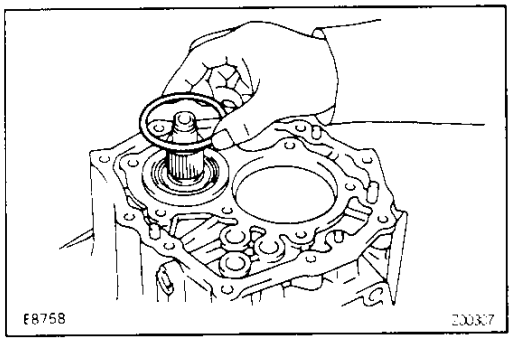

(e) Install the adjusting shim.
HINT: When re–using the output shaft bearing, first install a shim of the same thickness as before. If installing a new tapered roller bearing, first select and install a shim of lesser thickness than before.

MX

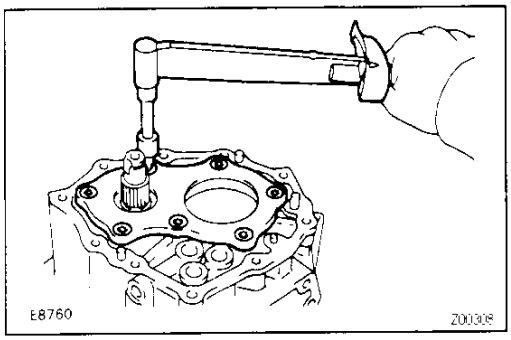

(f) Install the bearing retainer.

(g) Using a torx wrench, install and torque the 7 bolts.
(Torx wrench T45 09042–00050)
Torque: 42 N·m (430 kgf·cm, 31 ft·lbf)

(h) Install a new lock nut to the output shaft.

(i) Turn the output shaft right and left 2 or 3 times to allow the bearings to settle.

Downloaded from www.Manualslib.com manuals search engine

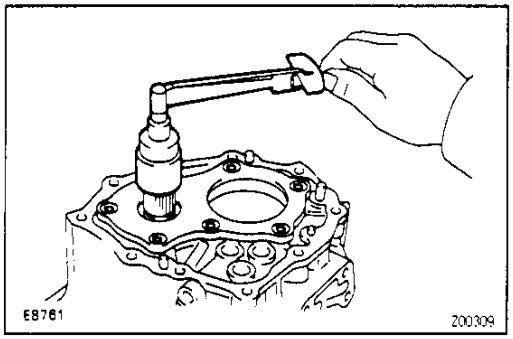

(j) Using a small torque wrench, measure the preload.
Preload (at starting):
New bearing
0.8 – 1.6 N·m (8 – 16 kgf·cm, 6.9 – 13.9 in.·lbf)
Reused bearing
0.5 – 1.0 N·m (5 – 10 kgf·cm, 4.3 – 8.7 in.·lbf)
If the preload is not within specification, select the adjusting shims.
HINT: The preload will change about 0.4 – 0.5 N·m (4 – 5 kgf·cm, 3.5 – 4.3 in.·lbf) for every 0.05 mm change in shim thickness.

MX

Mark	Thickness mm (in.)	Mark	Thickness mm (in.)
0	1.30 (0.0512)	D	1.95 (0.0768)
1	1.35 (0.0531)	E	2.00 (0.0787)
2	1.40 (0.0551)	F	2.05 (0.0807)
3	1.45 (0.0571)	G	2.10 (0.0827)
4	1.50 (0.0591)	H	2.15 (0.0846)
5	1.55 (0.0610)	J	2.20 (0.0866)
6	1.60 (0.0630)	K	2.25 (0.0886)
7	1.65 (0.0650)	L	2.30 (0.0906)
8	1.70 (0.0669)	M	2.35 (0.0925)
9	1.75 (0.0689)	N	2.40 (0.0945)
A	1.80 (0.0709)	P	2.45 (0.0965)
B	1.85 (0.0728)	Q	2.50 (0.0984)
C	1.90 (0.0748)	–	–

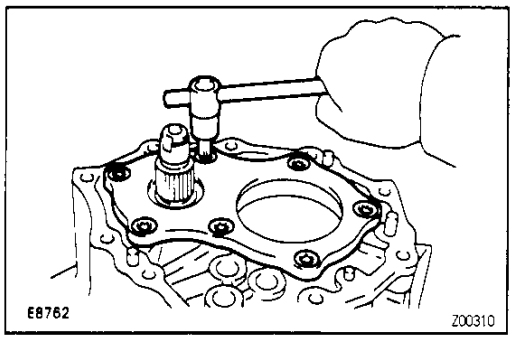

(k) Remove the lock nut.
(l) Using a torx wrench, remove the 7 torx screws and rear bearing retainer.
(Torx wrench T45 09042–00050)

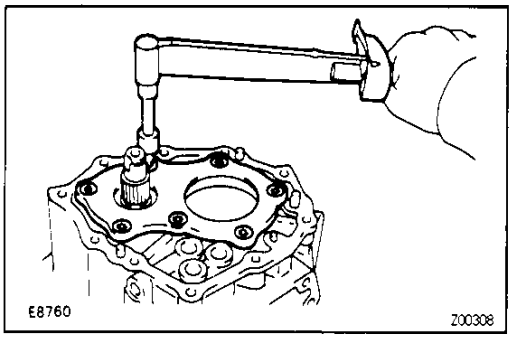

(m) Remove the shim.
(n) Remove the 17 bolts and transmission case.
(o) Remove the output shaft assembly.

Downloaded from www.Manualslib.com manuals search engine

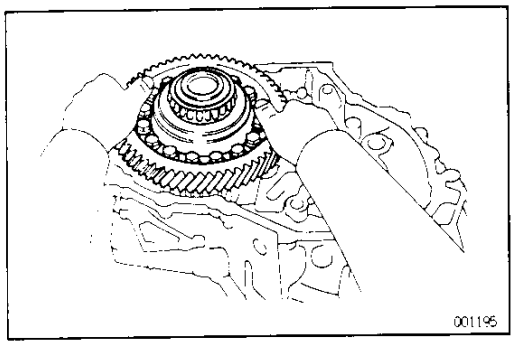

4. INSTALL DIFFERENTIAL CASE ASSEMBLY

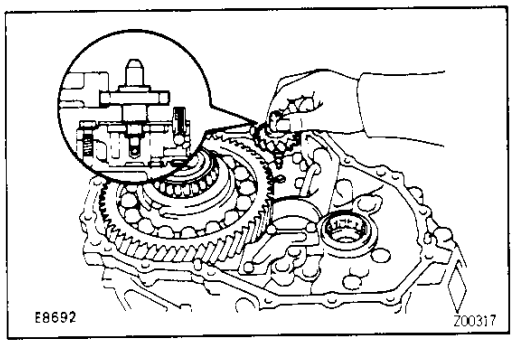

5. INSTALL OIL PUMP DRIVE GEAR

MX

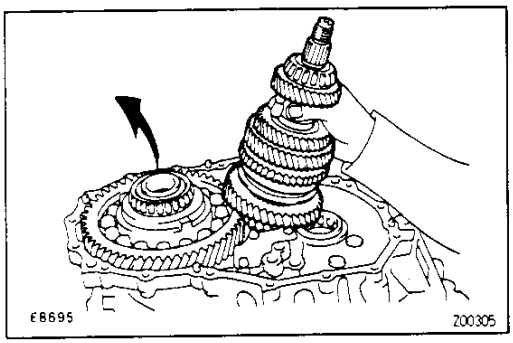

6. INSTALL OUTPUT SHAFT ASSEMBLY

(a) Lift up the differential case, install the output shaft assembly.

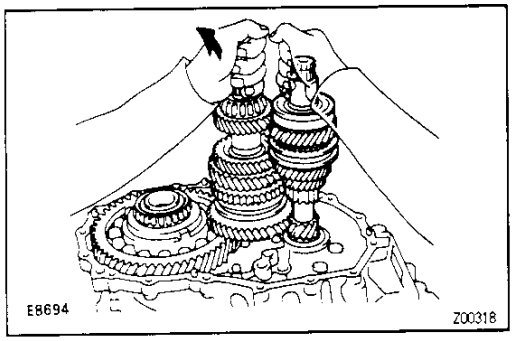

(b) Leaning the output shaft to the differential side, install the input shaft assembly.

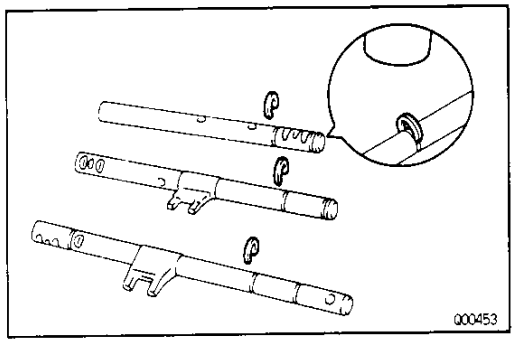

7. INSTALL SNAP RINGS

(a) Using a plastic hammer, install the snap rings to the No.1, No.2 and No.3 shift fork shafts.

Downloaded from www.Manualslib.com manuals search engine

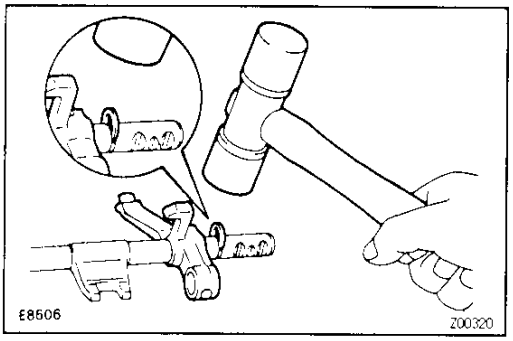

(b) Using a plastic hammer, the reverse shift fork and snap ring to the No.3 shift fork shaft.

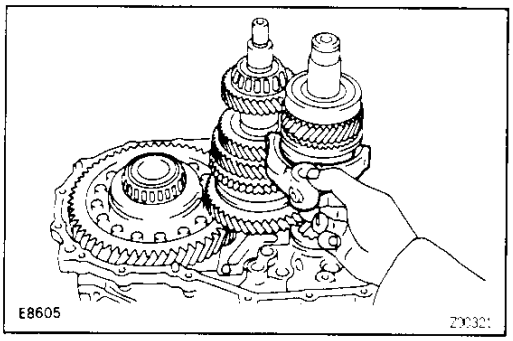

8. INSTALL NO.2 SHIFT FORK AND NO.3 SHIFT FORK SHAFT WITH REVERSE SHIFT FORK

(a) Install the No.2 shift fork to the No.2 hub sleeve.

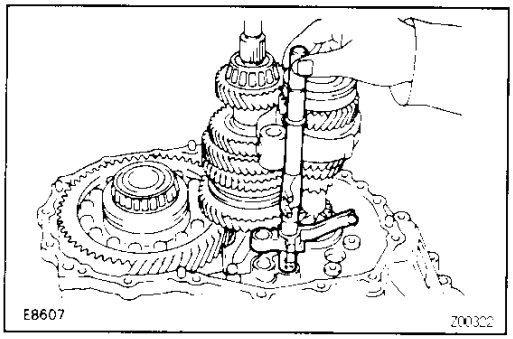

(b) Install the No.3 shift fork shaft with reverse shift fork.

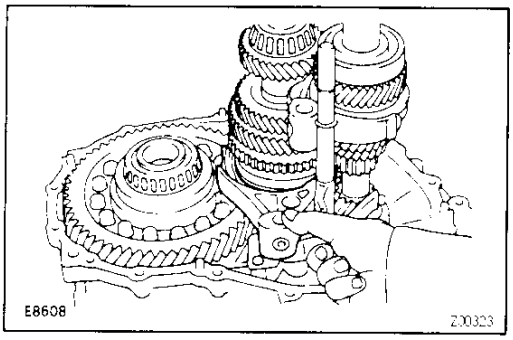

9. INSTALL NO.1 SHIFT FORK, SHIFT HEAD AND NO.2 SHIFT FORK SHAFT

(a) Install the No.1 shift fork to the No.1 hub sleeve.

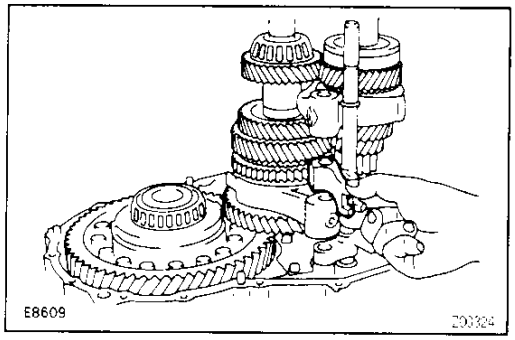

(b) Put shift head onto the No.1 shift fork.

Downloaded from www.Manualslib.com manuals search engine

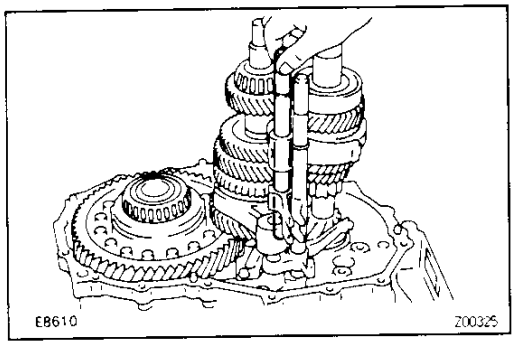

(c) Install the No.2 shift fork shaft to the transaxle case, through the shift head and No.1 shift fork.

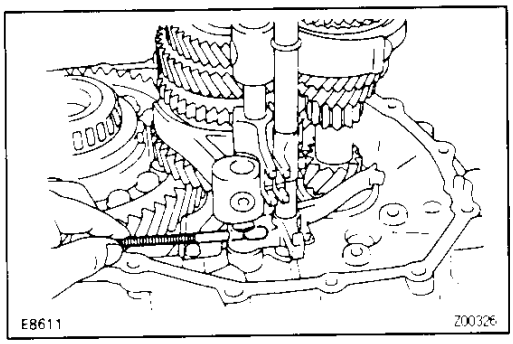

10. INSTALL INTERLOCK ROLLER

Using a magnetic finger, install the interlock roller to the reverse shift fork.

MX

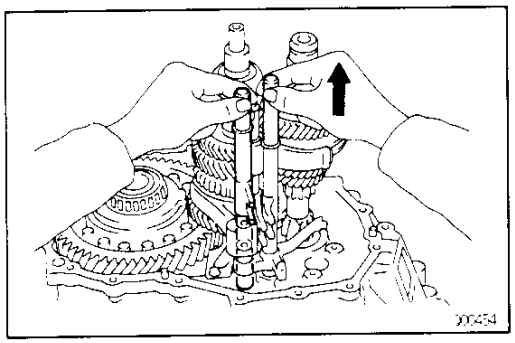

11. INSTALL NO.1 SHIFT FORK SHAFT

Install the No.1 shift fork shaft to the case, through the No.1 shift fork and reverse shift fork.

HINT: When it is difficult to push the fork shaft through the reverse shift fork, pull up the No.3 shift fork shaft.

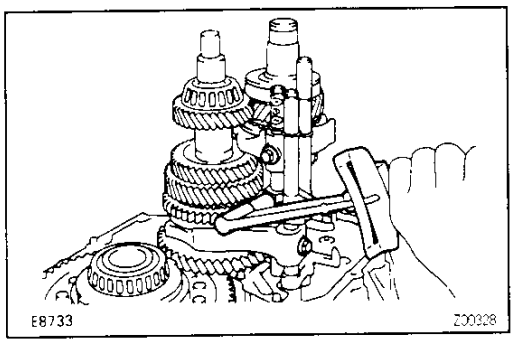

12. INSTALL SET BOLTS

Install and torque the 3 set bolts.

Torque: 24 N·m (240 kgf·cm, 17 ft·lbf)

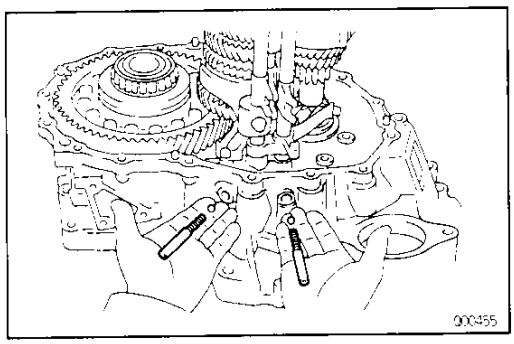

13. INSTALL LOCKING BALLS, SPRINGS, SEATS AND PLUGS

(a) Install the 2 locking balls, springs and seats.

Downloaded from www.Manualslib.com manuals search engine

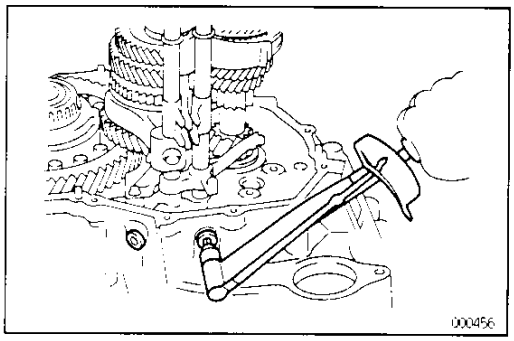

(b) Apply sealant to the 2 plugs.
Sealant:
Part No.08833–00080, THREE BOND 1344, LOCTITE 242 or equivalent

(c) Using a hexagon wrench, install and torque 2 plugs.
Torque: 25 N·m (250 kgf·cm, 18 ft·lbf)

MX

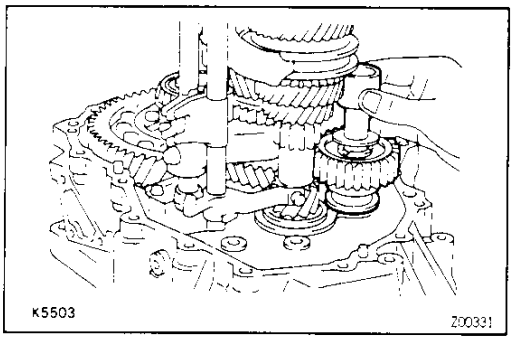

14. INSTALL REVERSE IDLER GEAR AND SHAFT

(a) Install the reverse idler gear shaft and thrust washer to the shaft.

(b) Install the reverse idler gear shaft into the case hole.

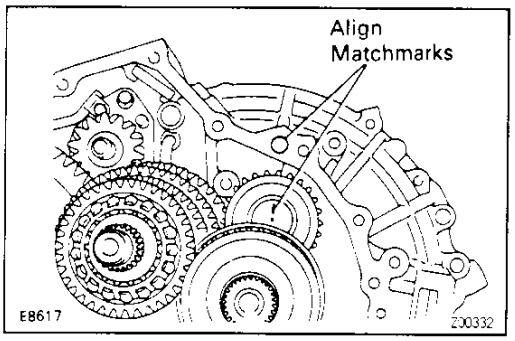

(c) Align matchmarks as shown.

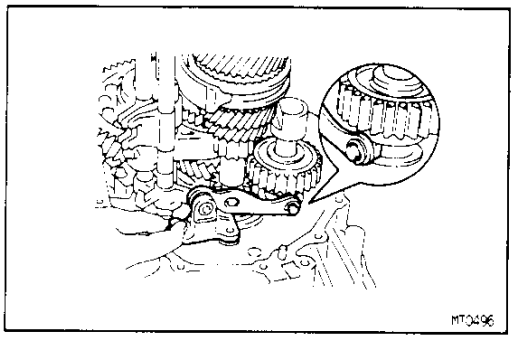

15. INSTALL REVERSE SHIFT ARM BRACKET AND NO.2 OIL PIPE

(a) Put the reverse shift fork pivot into the reverse shift arm install the reverse shift arm bracket to the transaxle case.

(b) Install the bolt.

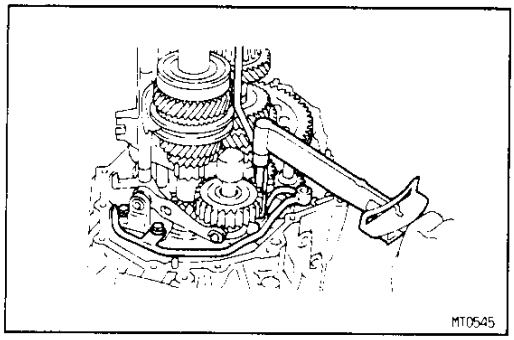

(c) Install the No.2 oil pipe and 2 bolts.

(d) Torque the reverse shift arm and oil pump bolts.
Torque: 17 N·m (175 kgf·cm, 13 ft·lbf)

Downloaded from www.Manualslib.com manuals search engine

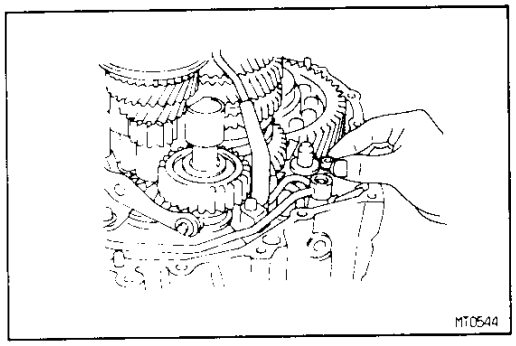

(e) Install a new gasket to the No.2 oil pipe.

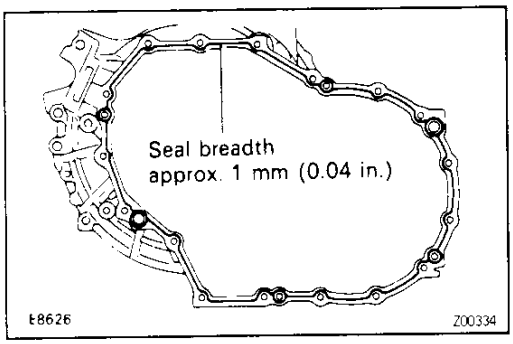

16. INSTALL TRANSMISSION CASE

(a) Remove the FIPG material and be careful not to drop oil on the contacting surfaces of the transmission case or transaxle case.

(b) Apply FIPG to the transmission case as shown in the illustration.

FIPG:

Part No.08826–00090, THREE BOND 1281 or equivalent

HINT: Install the transmission case as shown as the FIPG is applied.

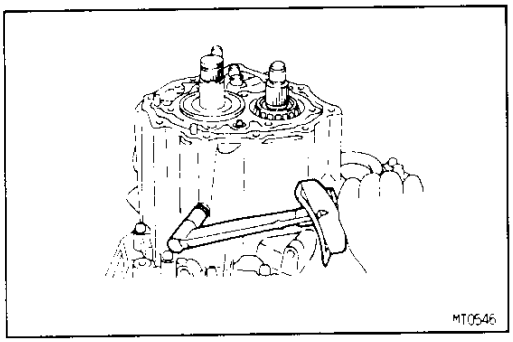

(c) Install and torque the 14 bolts to the transmission case side.

Torque: 29 N·m (300 kgf·cm, 22 ft·lbf)

(d) Install and torque the 3 bolts to the transaxle case side.

Torque: 29 N·m (300 kgf·cm, 22 ft·lbf)

17 INSTALL AND TORQUE REVERSE IDLER GEAR SHAFT RETAINING BOLT

Torque: 29 N·m (300 kgf·cm, 22 ft·lbf)

18. INSTALL LOCKING BALL, SPRING, SEAT AND PLUG

(a) Install the locking ball, spring and seat.

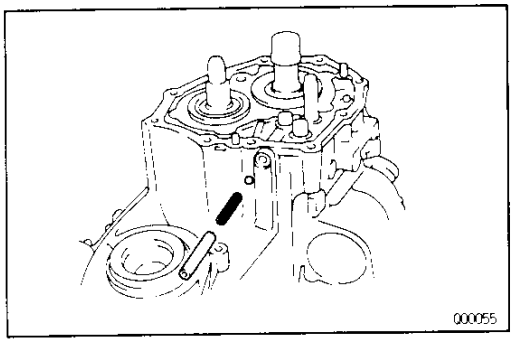

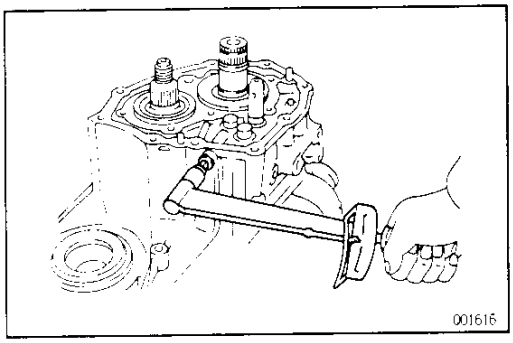

(b) Apply sealant to the plug.

Sealant:

Part No. 08833–00080, THREE BOND 1344, LOCTITE 242 or equivalent

(c) Using a hexagon wrench, install and torque the plug.

Torque: 25 N·m (250 kgf·cm, 18 ft·lbf)

MX

Downloaded from www.Manualslib.com manuals search engine

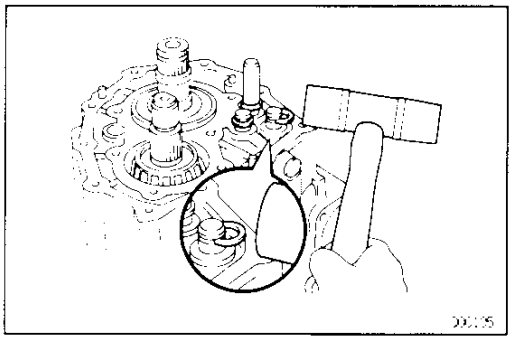

19. INSTALL SNAP RINGS

Using a plastic hammer, install the 3 snap rings.

MX

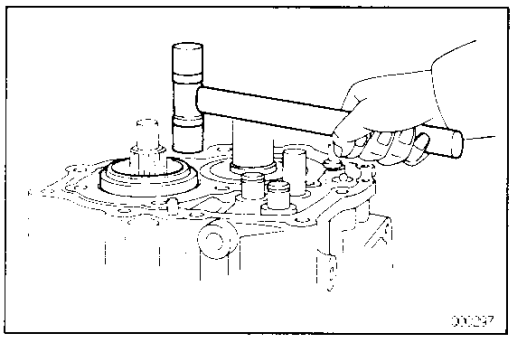

20. INSTALL OUTPUT SHAFT REAR TAPER ROLLER BEARING OUTER RACE

Using a plastic hammer, tap in the outer race.

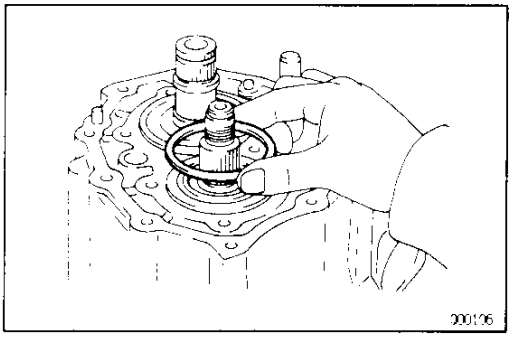

21. INSTALL SHIM

HINT: Install the previously selected shim.

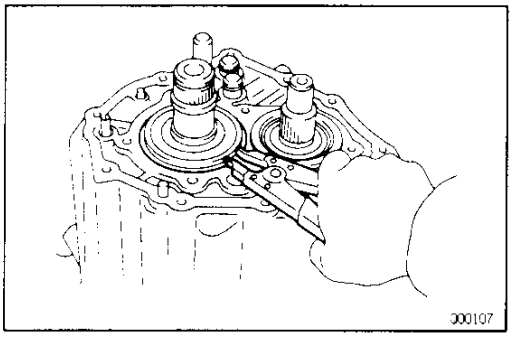

22. INSTALL SNAP RING

Using a snap ring expander, install the snap ring to the input shaft rear bearing.

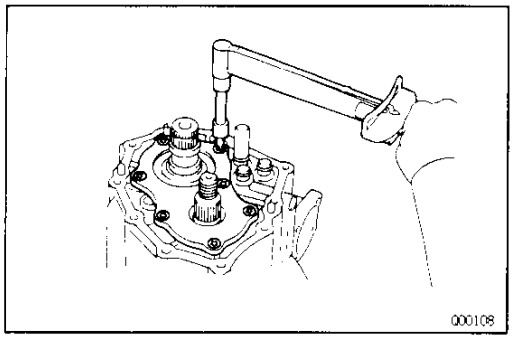

23. INSTALL REAR BEARING RETAINER

(a) Clean the threads of the torx screws.

(b) Using a torx wrench, install and torque the 7 torx screws.

(Torx wrench T45 09042–00050)

Torque: 42 N·m (430 kgf·cm, 31 ft·lbf)

Downloaded from www.Manualslib.com manuals search engine

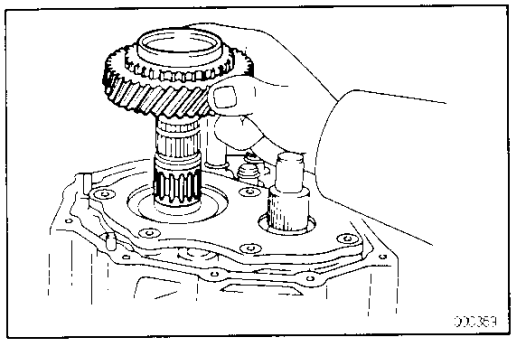

24. INSTALL NEEDLE ROLLER BEARING AND 5 TH GEAR

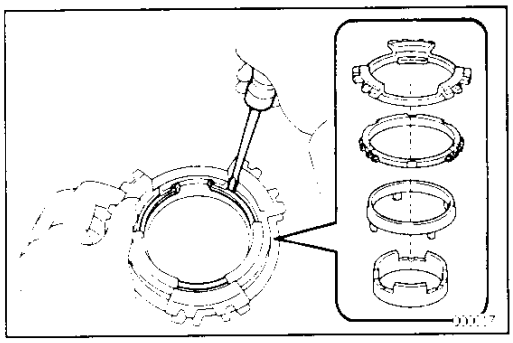

25. INSTALL NO.5 SYNCHRONIZER RINGS WITH KEY SPRING TO NO.3 CLUTCH HUB

(a) Assemble the No.5 synchronizer rings.

(b) Using a screwdriver, install the snap ring.
HINT: Wrap vinyl tape on the screwdriver to prevent damaging the synchronizer ring.

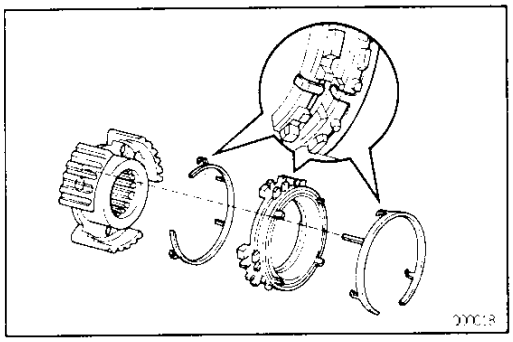

(c) Install the No.5 synchronizer rings with key springs to the No.3 clutch hub.
HINT: Align the holes of the clutch hub with key spring.

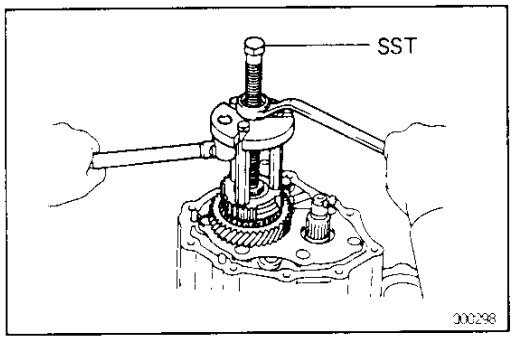

26. INSTALL NO.3 CLUTCH HUB

Using SST, install the No. 3 clutch hub with synchronizer ring and key spring.
SST 09950–30010

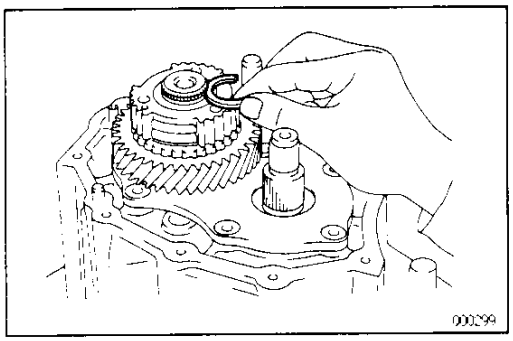

27. INSTALL SNAP RING

(a) Select a snap ring that will allow minimum axial play.

Mark	Thickness mm (in.)	Mark	Thickness mm (in.)
Q	2.25 (0.0886)	V	2.50 (0.0984)
R	2.30 (0.0906)	W	2.55 (0.1004)
S	2.35 (0.0925)	X	2.60 (0.1024)
T	2.40 (0.0945)	Y	2.65 (0.1043)
U	2.45 (0.0965)	–	–

Downloaded from www.Manualslib.com manuals search engine

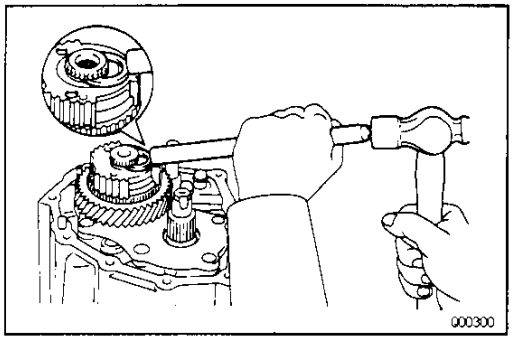

(b) Using a brass bar and a hammer, install the snap ring.

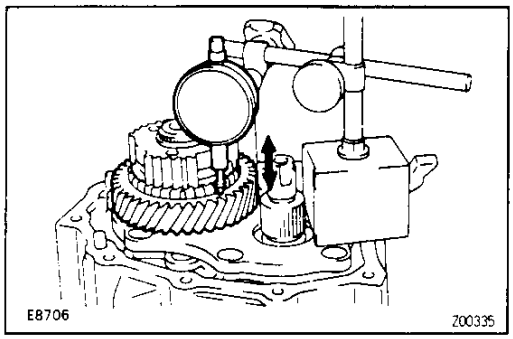

28. INSPECT 5TH GEAR THRUST CLEARANCE

Using a dial indicator, measure the 5th gear thrust clearance.

Standard clearance:

0.10 – 0.57 mm (0.0039 –0.0224 in.)

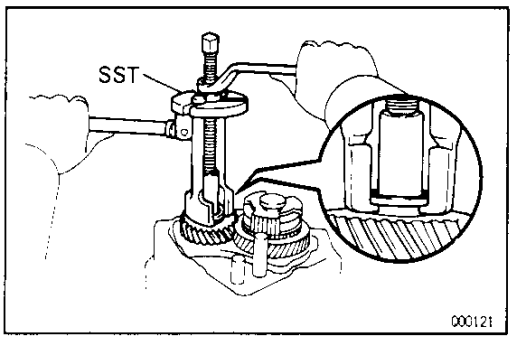

29. INSTALL 5TH DRIVEN GEAR

Using SST, install the 5th driven gear.

SST 09950–30010

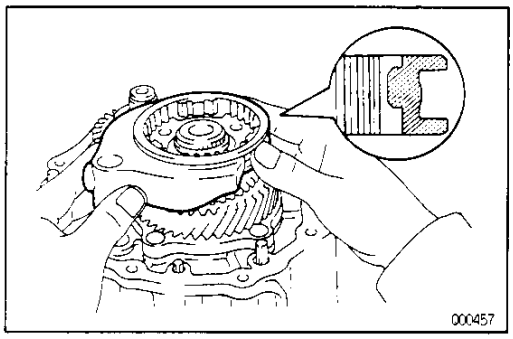

30. INSTALL NO. 3 HUB SLEEVE WITH NO. 3 SHIFT FORK

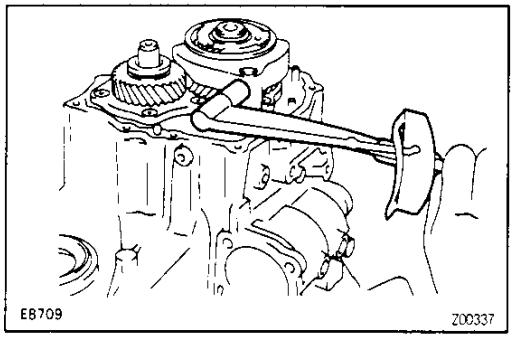

31. INSTALL SET BOLT

Install and torque the set bolt.

Torque: 24 N·m (240 kgf·cm, 17 ft·lbf)

Downloaded from www.Manualslib.com manuals search engine

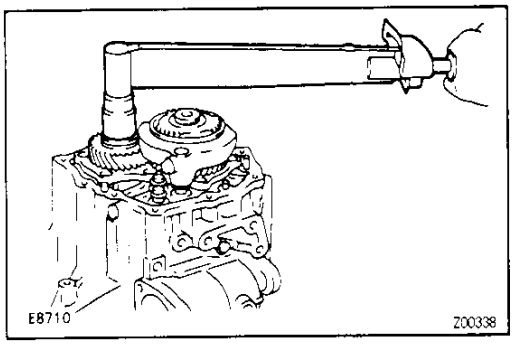

32. INSTALL LOCK NUT

(a) Engage the gear double meshing.

(b) Install and torque the lock nut.
Torque: 123 N·m (1,250 kgf·cm, 90 ft·lbf)

(c) Disengage the gear double meshing.

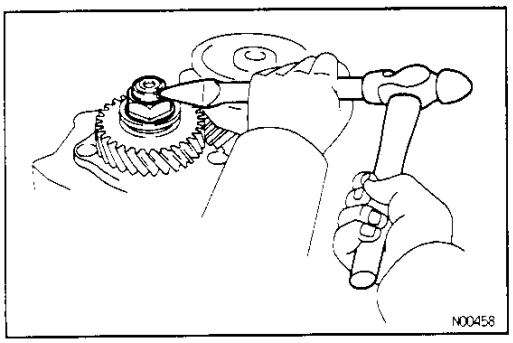

(d) Stake the lock nut.

MX

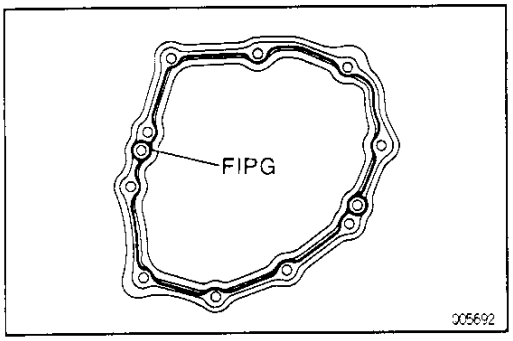

33. INSTALL TRANSMISSION CASE COVER

(a) Remove the FIPG material and be careful not to drop oil on the contacting surfaces of the transmission case cover.

(b) Apply FIPG to the transmission case as shown in the figure.
FIPG:
Part No. 08826–00090, THREE BOND 1281 or equivalent
HINT: Install the transmission case cover as soon as the FIPG is applied.

(c) Install and torque the 10 bolts.
Torque: 29 N·m (300 kgf·cm, 22 ft·lbf)

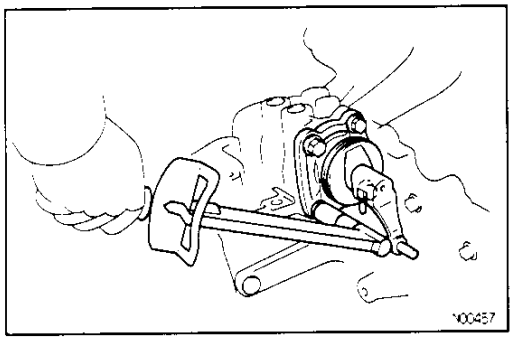

34. INSTALL SHIFT AND SELECT LEVER SHAFT ASSEMBLY

(a) Place a new gasket in position on the control shaft cover.

(b) Install the control shaft cover.

(c) Apply sealant to the bolt threads.
Sealant:
Part No. 08833–00080, THREE BOND 1344, LOCTITE 242 or equivalent

(d) Install and torque the 4 bolts.
Torque: 20 N·m (200 kgf·cm, 14 ft·lbf)

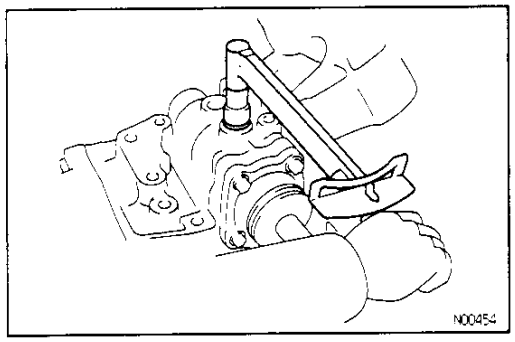

35. INSTALL AND TORQUE LOCK BOLT
Torque: 49 N·m (500 kgf·cm, 36 ft·lbf)

Downloaded from www.Manualslib.com manuals search engine

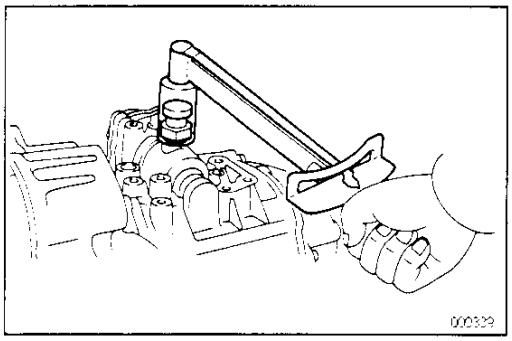

36. INSTALL BREATHER PLUG
Torque: 49 N·m (500 kgf·cm, 36 ft·lbf)

MX

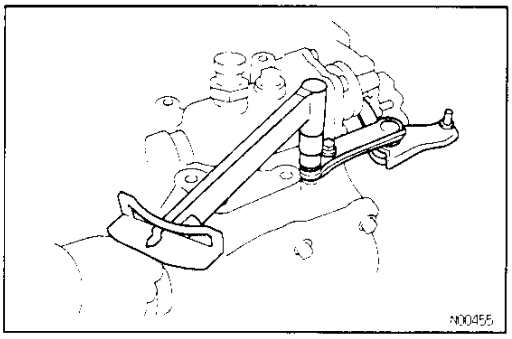

37. INSTALL AND TORQUE SELECTING BELLCRANK ASSEMBLY
Torque: 20 N·m (200 kgf·cm, 14 ft·lbf)

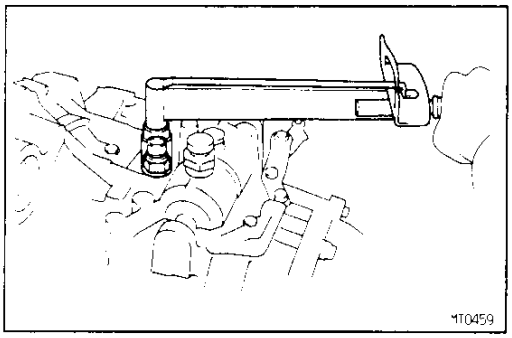

38. INSTALL BACK–UP LIGHT SWITCH
Torque: 40 N·m (410 kgf·cm, 30 ft·lbf)

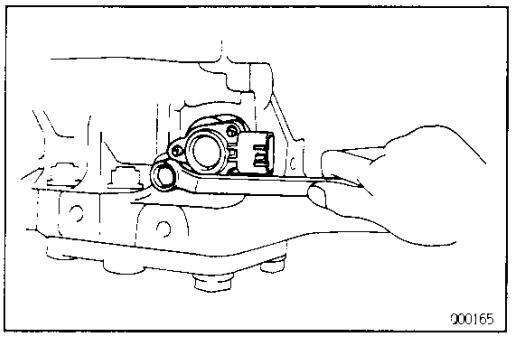

39. INSTALL SPEED SENSOR DRIVEN GEAR
Torque: 7.4 N·m (75 kgf·cm, 65 in.·lbf)

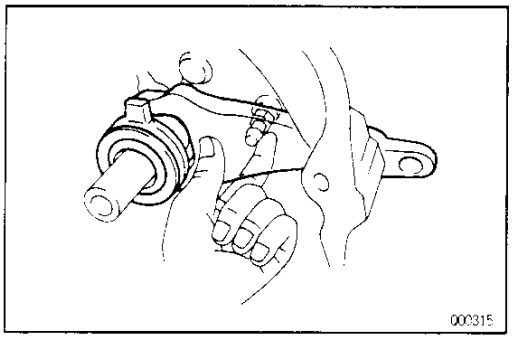

40. INSTALL RELEASE FORK AND BEARING
Apply molybdenum disulphide lithium base grease to the following parts:

- Input shaft spline
- Release fork contact surface

Downloaded from www.Manualslib.com manuals search engine

SHIFT LEVER AND CONTROL CABLE

MX01N-04

COMPONENTS

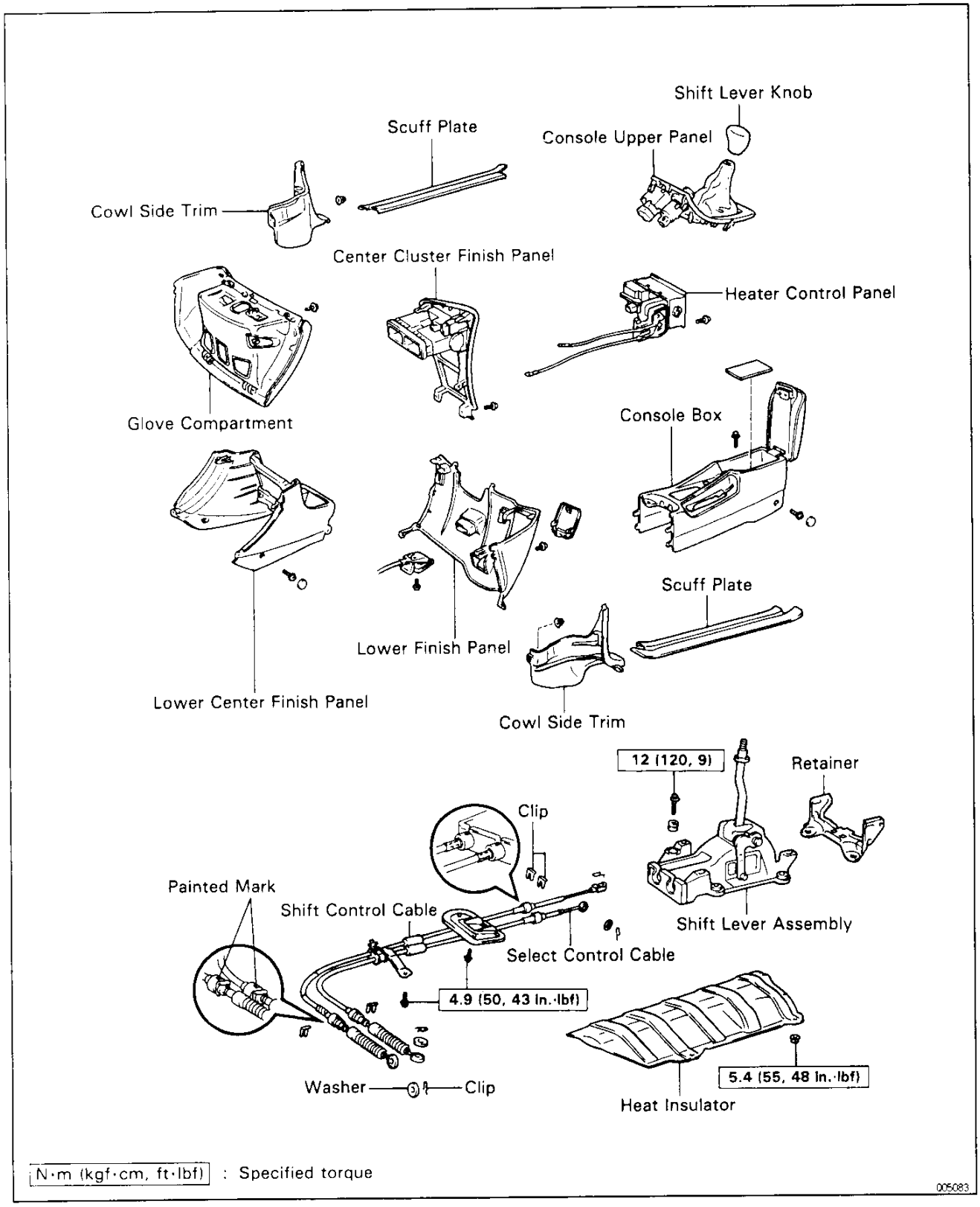

MX

Downloaded from www.Manualslib.com manuals search engine

SERVICE SPECIFICATIONS
SERVICE DATA

MX00Z-08

Input shaft 3rd and 4th gear journal diameter	
Limit	35.950 mm (1.4154 in.)
Input shaft 5th gear journal diameter	
Limit	27.950 mm (1.1004 in.)
Input shaft runout	
Limit	0.05 mm (0.0020 in.)
Output shaft 1st and 2nd gear journal diameter	
Limit	38.950 mm (1.5335 in.)
Output shaft runout	
Limit	0.06 mm (0.0024 in.)
Gear thrust clearance 1st	
STD	0.10 – 0.35 mm (0.0039 – 0.0138 in.)
Limit	0.40 mm (0.0157 in.)
Gear thrust clearance 2nd	
STD	0.10 – 0.45 mm (0.0039 – 0.0177 in.)
Limit	0.50 mm (0.0197 in.)
Gear thrust clearance 3rd	
STD	0.10 – 0.45 mm (0.0039 – 0.0177 in.)
Limit	0.50 mm (0.0197 in.)
Gear thrust clearance 4th	
STD	0.10 – 0.55 mm (0.0039 – 0.0217 in.)
Limit	0.60 mm (0.0236 in.)
Gear thrust clearance 5th	
STD	0.10 – 0.57 mm (0.0039 – 0.0224 in.)
Limit	0.65 mm (0.0256 in.)
Gear radial clearance 1st	
STD	0.009 – 0.051 mm (0.0004 – 0.0020 in.)
Limit	0.070 mm (0.0028 in.)
Gear radial clearance 2nd	
STD	0.009 – 0.053 mm (0.0004 – 0.0021 in.)
Limit	0.070 mm (0.0028 in.)
Gear radial clearance 3rd	
STD	0.009 – 0.053 mm (0.0004 – 0.0021 in.)
Limit	0.070 mm (0.0028 in.)
Gear radial clearance 4th	
STD	0.009 – 0.051 mm (0.0004 – 0.0020 in.)
Limit	0.070 mm (0.0028 in.)
Gear radial clearance 5th	
STD	0.009 – 0.050 mm (0.0004 – 0.0020 in.)
Limit	0.070 mm (0.0028 in.)
Shift fork to hub sleeve clearance	
Limit	1.0 mm (0.039 in.)
Shynchronizer ring to gear clearance 1st, 4th and 5th	
Limit	0.6 mm (0.024 in.)
Synchronizer ring to gear clearance 2nd and 3rd	
Limit	0.7 mm (0.028 in.)

MX

Downloaded from www.Manualslib.com manuals search engine

Input shaft snap ring thickness		
No.2 clutch hub	Mark H	2.30 mm (0.0906 in.)
No.2 clutch hub	Mark J	2.35 mm (0.0925 in.)
No.2 clutch hub	Mark K	2.40 mm (0.0945 in.)
No.2 clutch hub	Mark L	2.45 mm (0.0965 in.)
No.2 clutch hub	Mark M	2.50 mm (0.0984 in.)
No.2 clutch hub	Mark N	2.55 mm (0.1004 in.)
No.2 clutch hub	Mark P	2.60 mm (0.1024 in.)
No.3 clutch hub	Mark Q	2.25 mm (0.0886 in.)
No.3 clutch hub	Mark R	2.30 mm (0.0906 in.)
No.3 clutch hub	Mark S	2.35 mm (0.0925 in.)
No.3 clutch hub	Mark T	2.40 mm (0.0945 in.)
No.3 clutch hub	Mark U	2.45 mm (0.0965 in.)
No.3 clutch hub	Mark V	2.50 mm (0.0984 in.)
No.3 clutch hub	Mark W	2.55 mm (0.1004 in.)
No.3 clutch hub	Mark X	2.60 mm (0.1024 in.)
No.3 clutch hub	Mark Y	2.65 mm (0.1043 in.)
Output shaft snap ring thickness		
No.1 clutch hub	Mark A	2.80 mm (0.1102 in.)
No.1 clutch hub	Mark B	2.85 mm (0.1122 in.)
No.1 clutch hub	Mark C	2.90 mm (0.1142 in.)
No.1 clutch hub	Mark D	2.95 mm (0.1161 in.)
No.1 clutch hub	Mark E	3.00 mm (0.1181 in.)
No.1 clutch hub	Mark F	3.05 mm (0.1201 in.)
No.1 clutch hub	Mark G	3.10 mm (0.1220 in.)
Oil pump body clearance		
	STD	0.10 — 0.16 mm (0.004 — 0.006 in.)
	Limit	0.30 mm (0.012 in.)
Oil pump tip clearance		
	STD	0.08 — 0.15 mm (0.003 — 0.006 in.)
	Limit	0.30 mm (0.012 in.)
Oil pump side clearance		
	STD	0.03 — 0.08 mm (0.001 — 0.003 in.)
	Limit	0.15 mm (0.006 in.)
Control shaft cover oil seal drive in depth		0 — 1.0 mm (0—0.039 in.)

MX

Downloaded from www.Manualslib.com manuals search engine

Differential pinion to side gear backlash	0.05 — 0.20 mm (0.0020—0.0079 in.)
Differential side gear thrust washer thickness	
None Mark	0.80 mm (0.0315 in.)
None Mark	0.90 mm (0.0354 in.)
None Mark	1.00 mm (0.0394 in.)
None Mark	1.10 mm (0.0433 in.)
None Mark	1.20 mm (0.0472 in.)
None Mark	1.30 mm (0.0512 in.)
None Mark	1.40 mm (0.0551 in.)
Differential case side bearing preload (at starting)	
New bearing (add output shaft preload)	0.2 — 0.4 N·m (2.0 — 4.1 kgf·cm, 1.7 — 3.6 in.·lbf)
Reused bearing (add output shaft preload)	0.1 — 0.2 N·m (1.3 — 2.5 kgf·cm, 1.1 — 2.2 in.·lbf)
Differential side bearing adjusting shim thickness	
Mark 0	2.00 mm (0.0787 in.)
Mark 1	2.05 mm (0.0807 in.)
Mark 2	2.10 mm (0.0827 in.)
Mark 3	2.15 mm (0.0846 in.)
Mark 4	2.20 mm (0.0866 in.)
Mark 5	2.25 mm (0.0886 in.)
Mark 6	2.30 mm (0.0906 in.)
Mark 7	2.35 mm (0.0925 in.)
Mark 8	2.40 mm (0.0945 in.)
Mark 9	2.45 mm (0.0965 in.)
Mark A	2.50 mm (0.0984 in.)
Mark B	2.55 mm (0.1004 in.)
Mark C	2.60 mm (0.1024 in.)
Mark D	2.65 mm (0.1043 in.)
Mark E	2.70 mm (0.1063 in.)
Mark F	2.75 mm (0.1083 in.)
Mark G	2.80 mm (0.1102 in.)
Mark H	2.85 mm (0.1122 in.)
Output shaft bearing preload (at starting)	
New bearing	0.8 — 1.6 N·m (8 — 16 kgf·cm, 6.9 — 13.9 in.·lbf)
Reused bearing	0.5 — 1.0 N·m (5 — 10 kgf·cm, 4.3 — 8.7 in.·lbf)

Downloaded from www.Manualslib.com manuals search engine

Output shaft rear bearing adjusting shim thickness	
Mark 0	1.30 mm (0.0512 in.)
Mark 1	1.35 mm (0.0531 in.)
Mark 2	1.40 mm (0.0551 in.)
Mark 3	1.45 mm (0.0571 in.)
Mark 4	1.50 mm (0.0591 in.)
Mark 5	1.55 mm (0.0610 in.)
Mark 6	1.60 mm (0.0630 in.)
Mark 7	1.65 mm (0.0650 in.)
Mark 8	1.70 mm (0.0669 in.)
Mark 9	1.75 mm (0.0689 in.)
Mark A	1.80 mm (0.0709 in.)
Mark B	1.85 mm (0.0728 in.)
Mark C	1.90 mm (0.0748 in.)
Mark D	1.95 mm (0.0768 in.)
Mark E	2.00 mm (0.0787 in.)
Mark F	2.05 mm (0.0807 in.)
Mark G	2.10 mm (0.0827 in.)
Mark H	2.15 mm (0.0846 in.)
Mark J	2.20 mm (0.0866 in.)
Mark K	2.25 mm (0.0886 in.)
Mark L	2.30 mm (0.0906 in.)
Mark M	2.35 mm (0.0925 in.)
Mark N	2.40 mm (0.0945 in.)
Mark P	2.45 mm (0.0965 in.)
Mark Q	2.50 mm (0.0984 in.)
Shift lever preload	0.49 – 1.47 N·m (60 – 150 kgf·cm, 0.1 – 0.3 ft·lbf)
Shift lever preload adjusting shim thickness	
Mark A	0.5 mm (0.020 in.)
Mark B	0.6 mm (0.024 in.)
Mark C	0.7 mm (0.028 in.)
Mark D	0.8 mm (0.031 in.)
Mark E	0.9 mm (0.035 in.)
Mark F	1.0 mm (0.039 in.)
Mark G	1.1 mm (0.043 in.)
Mark H	1.2 mm (0.047 in.)
Mark J	1.3 mm (0.051 in.)
Mark K	1.4 mm (0.055 in.)
Mark L	1.5 mm (0.059 in.)
Mark M	1.6 mm (0.063 in.)
Mark N	1.7 mm (0.067 in.)

Downloaded from www.Manualslib.com manuals search engine

MX010-08

TORQUE SPECIFICATIONS

Part tigtened	N·m	kgf·cm	ft·lbf
Transaxle x Engine			
12 mm bolt	64	650	47
10 mm bolt	46	470	34
Center member x Body	52	530	38
Engine left mounting x Transaxle	64	650	47
Engine rear mounting x Transaxle	77	790	57
Engine rear mounting x Center member	64	650	47
Engine rear mounting x through bolt	87	890	64
Engine front mounting x Transaxle	77	790	57
Engine front mounting x Center member	64	650	47
Engine front mounting through bolt	87	890	64
Front exhaust pipe x Exhaust manifold	62	630	46
Exhaust pipe support bracket set bolt and nut	19	195	14
Front exhaust pipe x Rear exhaust pipe	43	440	32
Ground cable x Transaxle	21	210	15
Clutch release cylinder x Transaxle	12	120	9
Heat insulator x Clutch release cylinder	12	120	9
Starter x Transaxle	39	400	29
Transaxle x Transaxle case receiver	7.4	75	65 in.·lbf
Oil pump x Cover	10	105	8
Transaxle case x Transaxle case cover	54	550	40
Differential right case x Differential left case	63	640	46
Differential ring gear x Differential case	124	1,260	91
Transaxle case x Oil pump	17	175	13
Transaxle case x Transmission case	29	300	22
Reverse idler gear lock bolt	29	300	22
Transmission case x Rear bearing retainer	42	430	31
5th driven gear lock nut	123	1,250	90
Transmission case x Transmission case cover	29	300	22
Shift and select lever shaft lock bolt	20	200	14
Shift lever lock bolt	49	500	36
Breather plug	49	500	36
Selecting bellcrank lock bolt	20	200	14
Back–up light switch	40	410	30
Vehicle speed sensor lock bolt	7.4	75	65 in.·lbf
Shift lever ball cover lock bolt	5.0	50	43 in.·lbf

Downloaded from www.Manualslib.com manuals search engine

AUTOMATIC TRANSAXLE

DESCRIPTION ..... AX– 2
OPERATION ..... AX– 4
PREPARATION ..... AX– 9
TROUBLESHOOTING ..... AX– 11
ON–VEHICLE REPAIR ..... AX– 47
ASSEMBLY REMOVAL AND
INSTALLATION ..... AX– 54
SERVICE SPECIFICATIONS ..... AX– 70

Downloaded from www.Manualslib.com manuals search engine

DESCRIPTION

PRECAUTIONS

AT0GY-02

When working with FIPG material, you must observe the following.

- **Using a razor blade and gasket scraper, remove all the old FIPG material from the gasket surfaces.**
- **Thoroughly clean all components to remove all the loose material.**
- **Clean both sealing surfaces with a non—residue solvent.**
- **Apply the FIPG in an approx. 1 mm (0.04 in.) wide bead along the sealing surface.**
- **Parts must be assembled within 10 minutes of application. Otherwise, the FIPG material must be removed and reapplied.**

If the vehicle is equipped with a mobile communication system, refer to the precaution in the IN section.

GENERAL DESCRIPTION

AX0CJ-04

AX

The A140E Electronically Controlled Transaxle (hereafter called ECT) described in this AX section is a lock—up four—speed automatic transaxle developed exclusively for use with transversely—mounted engines.

Sectional View

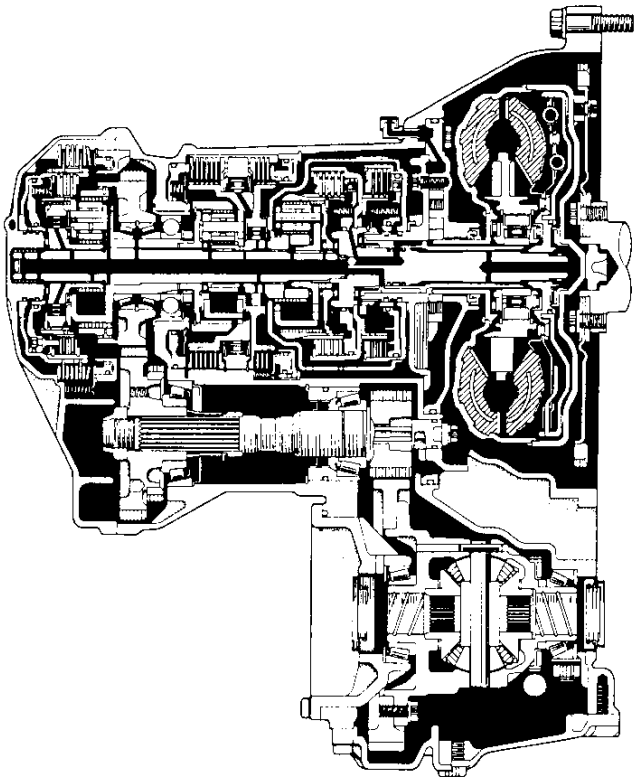

005289

Downloaded from www.Manualslib.com manuals search engine

SPECIFICATIONS

Type of Transaxle		A140E
Type of Engine		5S−FE, 3S−FE
Torque Converter Stall Torque Ratio		2.0 : 1
Torque Converter Lock−up Mechanism		Equipped
Gear Ratio	1st Gear	2.810
	2nd Gear	1.549
	3rd Gear	1.000
	O/D Gear	0.706
	Reverse Gear	2.296
Number of Discs / Plates	O/D Direct Clutch (C_0)	2 / 2
	Forward Clutch (C_1)	4 / 4
	Direct Clutch (C_2)	3 / 3
	2nd Brake (B_2)	3 / 3
	1st & Reverse Brake (B_3)	6 / 5
	O/D Brake (B_0)	2 / 4
2nd Coast Brake (B_1) Band Width	mm (in.)	25 (0.98)
ATF Type		ATF DEXRON® II
Capacity liter (US qts, Imp.qts)	Total	5.6 (5.9, 4.9)
	Drain & Refill	1.6 (1.7, 1.4)

AX

Downloaded from www.Manualslib.com manuals search engine

OPERATION

AX0T8-01

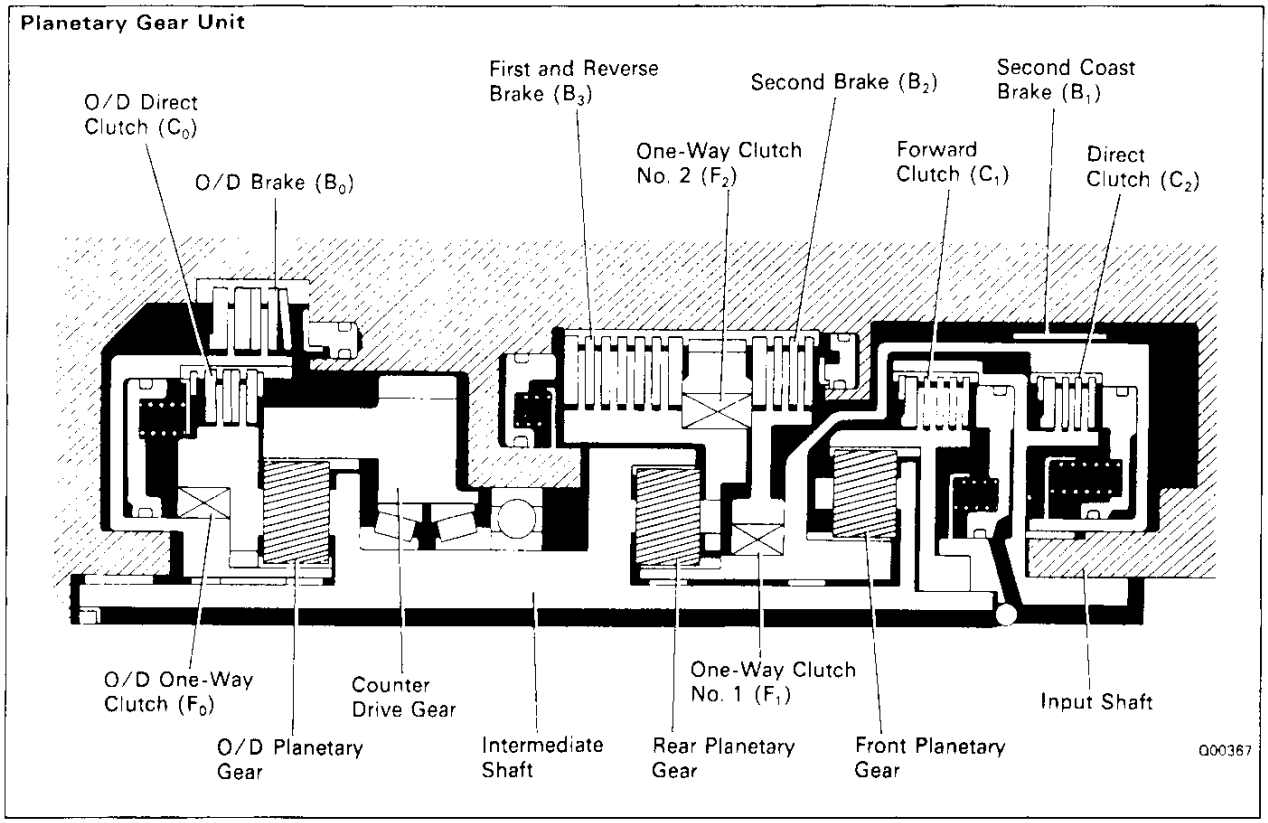

○ . . . . . Operating

Shift lever position	Gear Position	C_0	C_1	C_2	B_0	B_1	B_2	B_3	F_0	F_1	F_2
P	Parking	○									
R	Reverse	○		○				○			
N	Neutral	○									
D	1st	○	○						○		○
	2nd	○	○				○		○	○	
	3rd	○	○	○			○		○		
	O/D		○	○	○		○				
2	1st	○	○						○		○
	2nd	○	○			○	○		○	○	
	* 3rd	○	○	○			○		○		
L	1st	○	○					○	○		○
	* 2nd	○	○			○	○		○	○	

* Down-shift only – no up-shift

V00374

Downloaded from www.Manualslib.com manuals search engine

1. FUNCTION OF COMPONENTS

COMPONENT	FUNCTION
O/D Direct Clutch (Co)	Connects overdrive sun gear and overdrive carrier.
O/D Brake (B_0)	Prevents overdrive sun gear from turning either clockwise or counterclockwise.
O/D One-Way Clutch (F_0)	When transaxle is being driven by engine, connects overdrive sun gear and overdrive carrier.
Front Clutch (C_1)	Connects input shaft and intermediate shaft.
Rear Clutch (C_2)	Connects input shaft and front and rear planetary gear.
No. 1 Brake (B_1)	Prevents front and rear planetary sun gear from turning either clockwise or counterclockwise.
No. 2 Brake (B_2)	Prevents outer race of F. from turning either clockwise or counterclockwise, thus preventing front and rear planetary sun gear from turning counterclockwise.
No. 3 Brake (B_3)	Prevents front planetary carrier from turning either clockwise or counterclockwise.
No. 1 One-Way Clutch (F_1)	When B_2 is operating, prevents front and rear planetary sun gear from turning counterclockwise.
No. 2 One-Way Clutch (F_2)	Prevents front planetary carrier from turning counterclockwise.

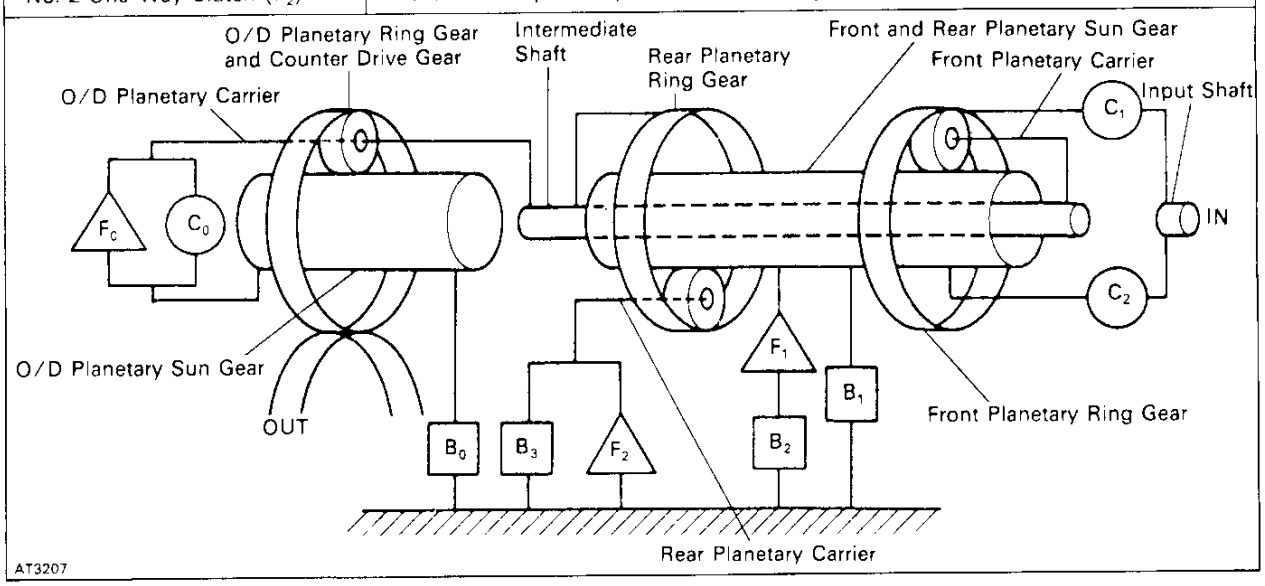

AX

Downloaded from www.Manualslib.com manuals search engine

Power from the engine transmitted to the input shaft via the torque converter is then transmitted to the planetary gears by the operation of the clutch.
By operation of the brake and one—way clutch, either the planetary carrier or the planetary sun gear are immobilized, altering the speed of revolution of the planetary gear unit.
Shift change is carried out by altering the combination of clutch and brake operation.
Each clutch and brake operates by hydraulic pressure. Gear positions are decided according to the throttle opening angle and vehicle speed, and shift change automatically occurs.
The conditions of operation for each gear position are shown in the following illustrations:

AX

D or 2 Range 1st Gear

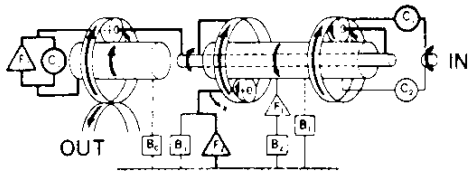

AT1097

2 Range 2nd Gear

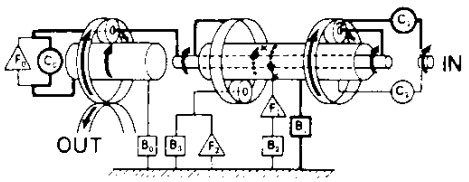

AT1102

D Range 2nd Gear

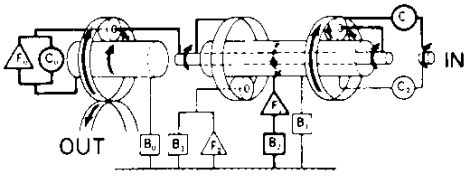

AT1098

L Range 1st Gear

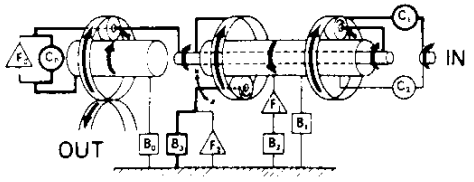

AT1103

D Range 3rd Gear

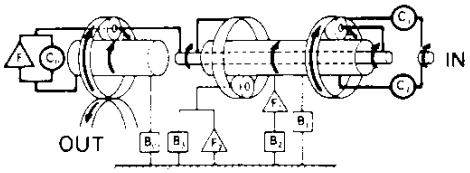

AT1099

R Range Reverse Gear

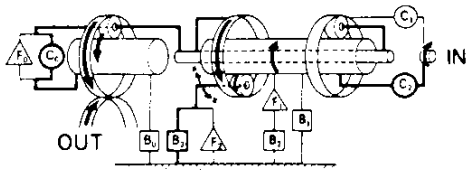

AT1101

D Range O/D Gear

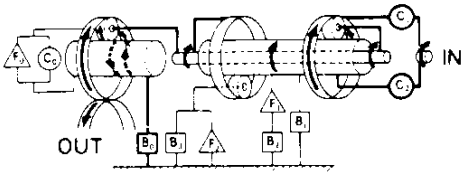

AT1100

V00342

Downloaded from www.Manualslib.com manuals search engine

2. HYDRAULIC CONTROL SYSTEM

The hydraulic control system is composed of the oil pump, the valve body, the solenoid valves, the accumulator, the clutches and brakes, and the governor valve as well as the fluid passages which connect all of these components.

Based on the hydraulic pressure created by the oil pump, the hydraulic control system governs the hydraulic pressure acting on the torque converter, clutches and brakes in accordance with the vehicle driving conditions.

There are three solenoid valves on the valve body.

The No.1 and No.2 solenoid valves are turned on and off by signals from the Engine and ECT ECU to operate the shift valves and change the gear shift position.

The No.3 solenoid valve is operated by signals from the Engine and ECT ECU to engage or disengage the lock—up clutch of the torque converter.

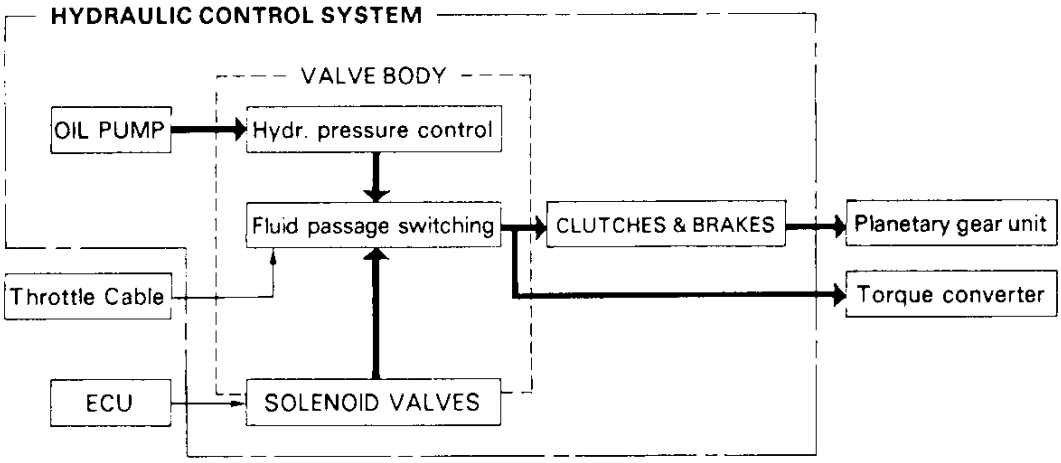

V00332

Downloaded from www.Manualslib.com manuals search engine

AX

3. ELECTRONIC CONTROL SYSTEM

The electronic control system for controlling the shift timing and the operation of the lock–up clutch is composed of the following three parts:

(a) Sensors: These sense the vehicle speed and throttle position and send this data to the Engine and ECT ECU in the form of electronic signals.

(b) Engine and ECT ECU: This determines the shift and lock–up timing based upon the signals from the sensors.

(c) Actuators: Solenoid valves divert hydraulic pressure from one circuit of the hydraulic control unit to another, thus controlling shifting and lock–up timing.

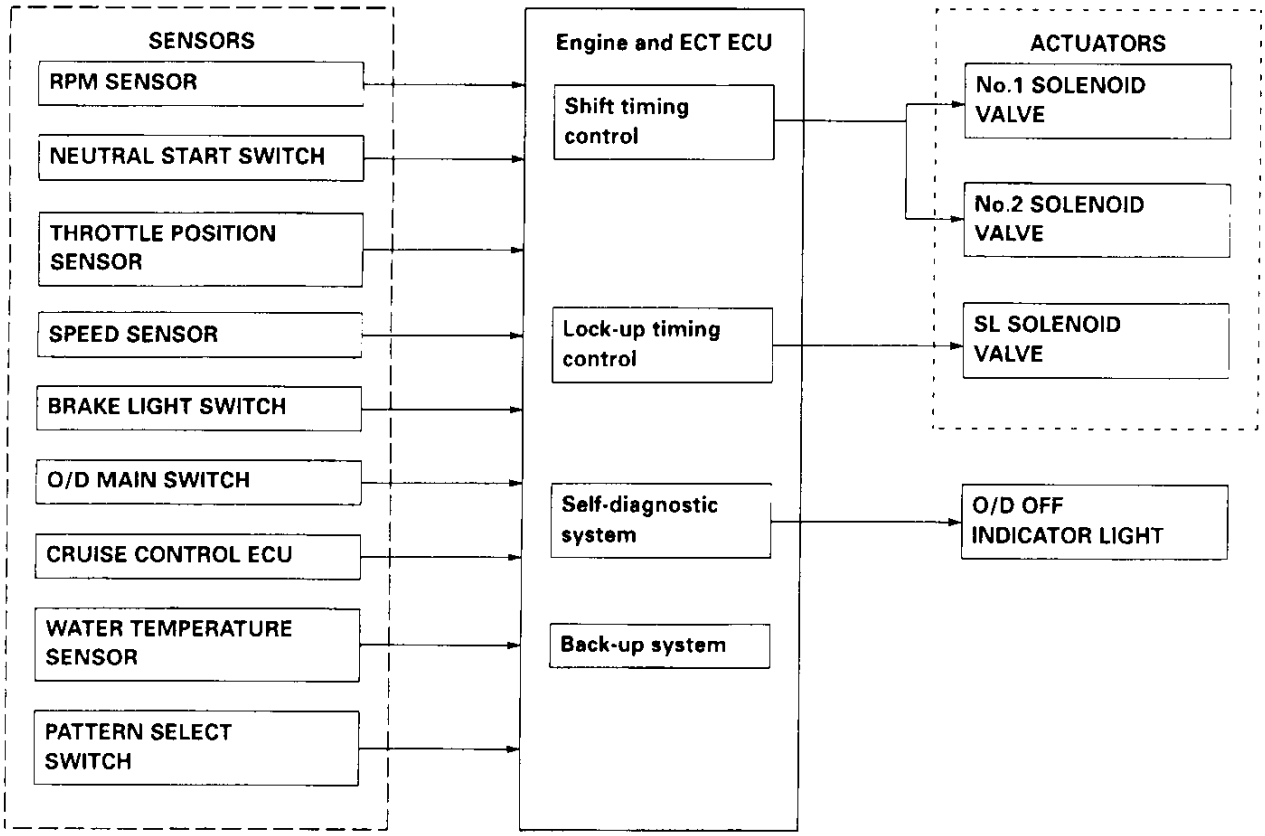

V05143

Downloaded from www.Manualslib.com manuals search engine

PREPARATION

AX00J-01

SST (SPECIAL SERVICE TOOLS)

	09308-00010	Oil Seal Puller	Remove side gear shaft oil seal.
	09350-32014	TOYOTA Automatic Transmission Tool Set	
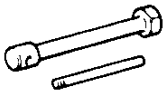	(09351-32010)	One-way Clutch Test Tool	
	(09351-32020)	Stator Stopper	
	(09351-32130)	Handle	
	(09351-32150)	Oil Seal Replacer	
	09843-18020	Diagnosis Check Wire	
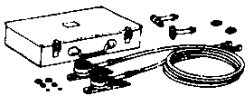	09992-00094	Automatic Transmission Oil Pressure Gauge Set	Line pressure

AX01D-0A

RECOMMENDED TOOLS

	09082-00050	TOYOTA Electrical Tester Set	

AX

Downloaded from www.Manualslib.com manuals search engine

EQUIPMENT

AX00K-06

Straight edge	Check torque converter installation.
Vernier calipers	Check torque converter installation.
Dial indicator or dial indicator with magnetic base	Measures drive plate runout.
Torque wrench	

LUBRICANT

AX00L-06

Item	Capacity	Classification
Automatic transaxle fluid w/o Differential oil: Dry fill Drain and refill	 5.6 liters (5.9 US qts, 4.9 Imp.qts) 2.5 liters (2.6 US qts, 2.2 Imp.qts)	ATF DEXRON® II
Differential oil (w/ Automatic transaxle)	1.6 liters (1.7 US qts, 1.4 Imp. qts)	ATF DEXRON® II

AX

SSM (SPECIAL SERVICE MATERIALS)

AX00M-06

08833-00070	Adhesive 1324, THREE BOND 1324 or equivalent	Torque converter mounting bolt

Downloaded from www.Manualslib.com manuals search engine

TROUBLESHOOTING

AX087-03

GENERAL INFORMATION

Trouble occurring in the ECT can stem from one of three sources; the engine, the ECT electronic control unit or the transaxle itself. Before troubleshooting, determine in which of these three sources the problem lies, and begin troubleshooting with the simplest operation, gradually working up in order of difficulty.

AX088-03

BASIC TROUBLESHOOTING

Before troubleshooting the ECT, first determine whether the problem is electrical or mechanical. To do this, just refer to the basic troubleshooting flow—chart provided below.
If the cause is already known, using the basic troubleshooting chart below along with the general troubleshooting chart on the following page should speed the procedure.

AX

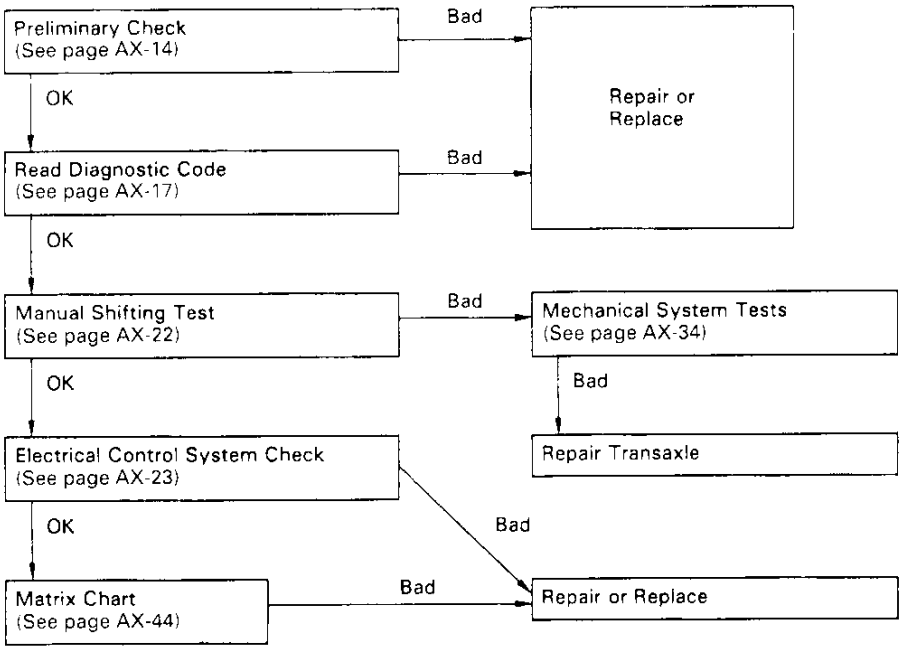

V01076

Downloaded from www.Manualslib.com manuals search engine

AX069-03

GENERAL TROUBLESHOOTING

★: Refer to A140E Automatic Transaxle Repair Manual. (Pub. No. RM248E)

AX

Problem	Possible cause	Remedy	Page
Fluid discolored or smells burnt	Fluid contaminated	Replace fluid	AX-14
	Torque converter faulty	Replace torque converter	AX-54
	Transaxle faulty	Disassemble and inspect transaxle	★
Vehicle does not move in any forward range or reverse	Shift cable out of adjustment	Adjust shift cable	AX-15
	Valve body or primary regulator faulty	Inspect valve body	★
	Parking lock pawl faulty	Inspect parking lock pawl	★
	Torque converter faulty	Replace torque converter	AX-54
	Converter drive plate broken	Replace drive plate	AX-54
	Oil strainer intake screen blocked	Clean screen	★
	Transaxle faulty	Disassemble and inspect transaxle	★
Shift lever position incorrect	Shift cable out of adjustment	Adjust shift cable	AX-15
	Manual valve and lever faulty	Inspect valve body	★
	Transaxle faulty transaxle	Disassemble and inspect	★
Harsh engagement into any drive range	Throttle cable out of adjustment	Adjust throttle cable	AX-15
	Valve body or primary regulator faulty	Inspect valve body	★
	Accumulator pistons faulty	Inspect accumulator pistons	★
	Transaxle faulty	Disassemble and inspect transaxle	★
Delayed 1-2, 2-3 or 3-O/D up-shift, or down-shifts from O/D-3 or 3-2 and shift back to O/D or 3	Electronic control faulty	Inspect electronic control	AX-23
	Valve body faulty	Inspect valve body	★
	Solenoid valve faulty	Inspect solenoid valve	AX-31
	Throttle cable out of adjustment	Adjust throttle cable	AX-15
Slips on 1-2, 2-3 or 3-O/D up-shift, or slips or shudders on acceleration	Shift cable out of adjustment	Adjust shift cable	AX-15
	Throttle cable out of adjustment	Adjust throttle cable	AX-15
	Valve body faulty	Inspect valve body	★
	Solenoid valve faulty	Inspect solenoid valve	AX-31
	Transaxle faulty	Disassemble and inspect transaxle	★
Drag, binding or tie-up on 1-2, 2-3, or 3-O/D up-shift	Shift cable out of adjustment	Adjust shift cable	AX-15
	Valve body faulty	Inspect valve body	★
	Transaxle faulty	Disassemble and inspect transaxle	★

Downloaded from www.Manualslib.com manuals search engine

★: Refer to A140E Automatic Transaxle Repair Manual. (Pub. No. RM248E)

Problem	Possible cause	Remedy	Page
No lock-up in 2nd, 3rd or O/D	Electronic control faulty	Inspect electronic control	AX-23
	Valve body faulty	Inspect valve body	★
	Solenoid valve faulty	Inspect solenoid valve	AX-31
	Transaxle faulty	Disassemble and inspect transaxle	★
Harsh down-shift	Throttle cable out of adjustment	Adjust throttle cable	AX-15
	Throttle cable and cam faulty	Inspect throttle cable and cam	AX-15
	Accumulator pistons faulty	Inspect accumulator pistons	★
	Valve body faulty	Inspect valve body	★
	Transaxle faulty	Disassemble and inspect transaxle	★
No down-shift when coasting	Valve body faulty	Inspect valve body	★
	Solenoid valve faulty	Inspect solenoid valve	AX-31
	Electronic control faulty	Inspect electronic control	AX-23
Down-shift occurs too quickly or too late while coasting	Throttle cable faulty	Inspect throttle cable	AX-15
	Valve body faulty	Inspect valve body	★
	Transaxle faulty	Disassemble and inspect transaxle	★
	Solenoid valve faulty	Inspect solenoid valve	AX-31
	Electronic control faulty	Inspect electronic control	AX-23
No O/D-3, 3-2 or 2-1 kick-down	Solenoid valve faulty	Inspect solenoid valve	AX-31
	Electronic control faulty	Inspect electronic control	AX-23
	Valve body faulty	Inspect valve body	★
	Throttle cable out of adjustment	Adjust throttle cable	AX-15
No engine braking in 2 or L range	Solenoid valve faulty	Inspect solenoid valve	AX-31
	Electronic control faulty	Inspect electronic control	AX-23
	Valve body faulty	Inspect valve body	★
	Transaxle faulty	Disassemble and inspect transaxle	★
Vehicle does not hold in P range	Shift cable out of adjustment	Adjust shift cable	AX-15
	Parking lock pawl and spring faulty	Inspect cam and spring	★

AX

V01078

Downloaded from www.Manualslib.com manuals search engine

AX0XN-01

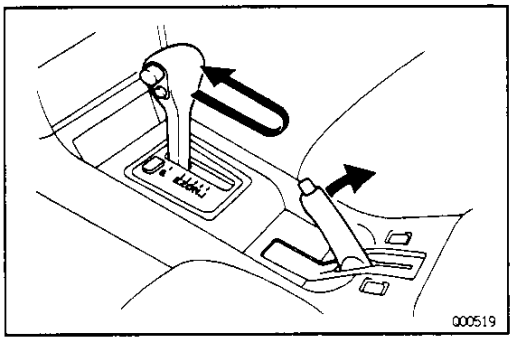

PRELIMINARY CHECK

1. CHECK TRANSAXLE FLUID LEVEL

HINT: The vehicle must have been driven so that the engine and transaxle are at normal operating temperature. Transaxle fluid temperature: 70–80°C (158–176°F)

(a) Park the vehicle on a level surface, set the parking brake.

(b) With the engine idling and the brake pedal depressed, shift the shift lever into each gear from the P range to L range smoothly and return to P range.

(c) Pull out the transaxle dipstick and wipe it clean.

(d) Push it back fully into the pipe.

(e) Pull it out and check that the fluid level is in the HOT range.

If the level is at the low side of the hot range, add fluid.

Fluid type:

ATF DEXRON® II

NOTICE: Do not overfill.

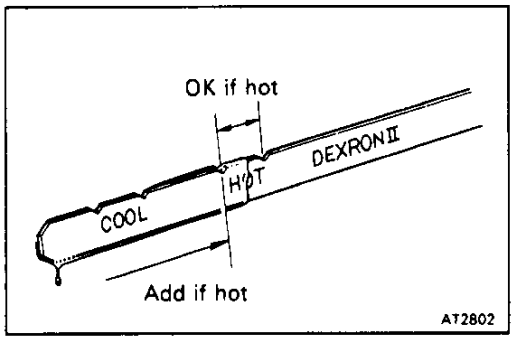

2. CHECK FLUID CONDITION

If the fluid smells burnt or is black, replace it.

3. REPLACE ATF

NOTICE: Do not overfill.

(a) Using 10 mm hexagon wrench remove the drain plug, gasket and drain the fluid.

(b) Install a new gasket and the drain plug securely.

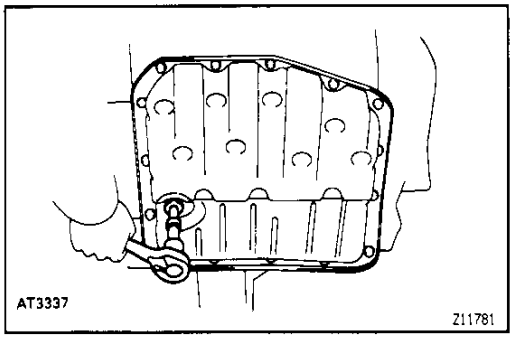

(c) Add new fluid through the filler pipe.

Fluid:

ATF DEXRON® II

Dry fill:

5.6 liters (5.9 US qts, 4.9 Imp.qts)

Drain and refill:

2.5 liters (2.6 US qts, 2.2 Imp.qts)

(d) Start the engine and shift the selector into all positions from P through L and then shift into P range.

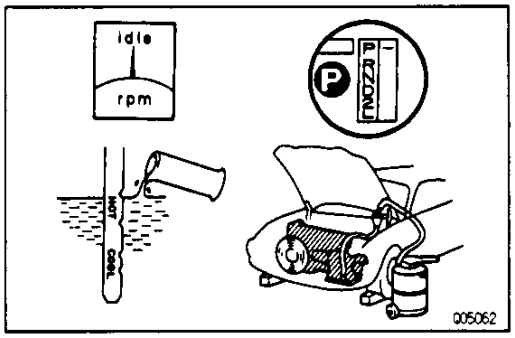

(e) With the engine idling, check the fluid level. Add fluid up to the COOL level on the dipstick.

(f) Check the fluid level with the normal fluid temperature 70 – 80 °C (158 – 176 °F) and add as necessary.

NOTICE: Do not overfill.

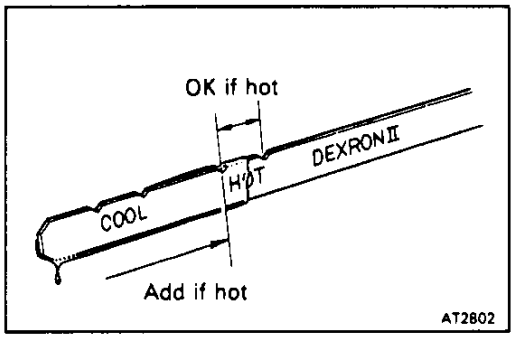

Downloaded from www.Manualslib.com manuals search engine

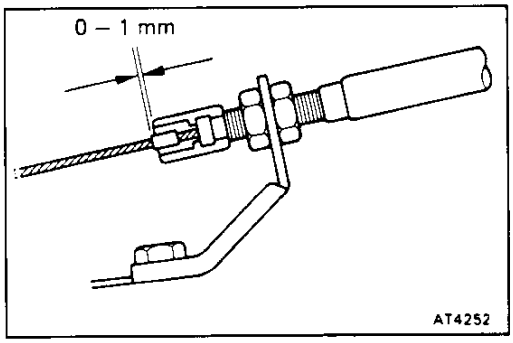

4. INSPECT AND ADJUST THROTTLE CABLE

(a) Check that the throttle valve is fully closed.

(b) Check that the inner cable is not slack.

(c) Loosen the adjustment nuts.

(d) Adjust the outer cable so that the distance between the end of the boot and stopper on the cable is as standard.

Standard boot and cable stopper distance:

0 – 1 mm (0 – 0.04 in.)

(e) Tighten the adjusting nuts.

(f) Recheck the adjustments.

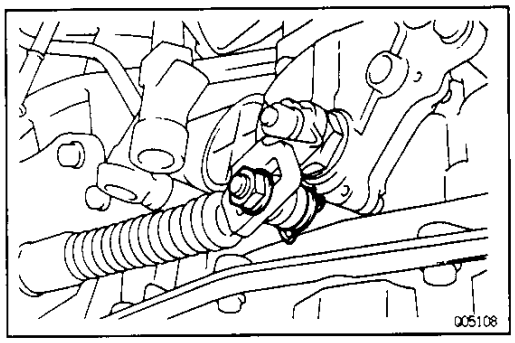

5. ADJUST SHIFT CONTROL CABLE

(a) Loosen the nut on the lever.

(b) Push the manual lever fully toward the right side of the vehicle.

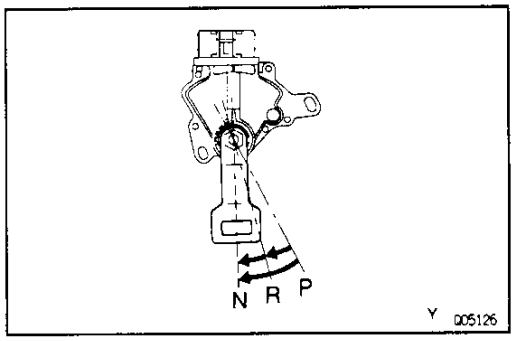

(c) Return the lever 2 notches to the NEUTRAL range.

(d) Set the shift lever in N range.

(e) While holding the lever lightly toward the "R" range side, tighten the shift lever nut.

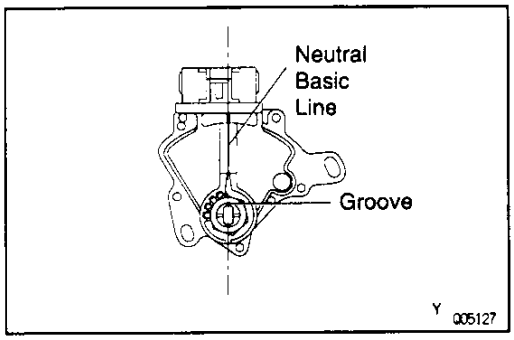

6. ADJUST NEUTRAL START SWITCH

If the engine will start with the shift selector in any range other than N or P range, adjustment is required.

(a) Loosen the neutral start switch bolts and set the shift selector to the N range.

(b) Align the groove and neutral basic line.

(c) Hold in position and tighten the bolts.

Torque: 5.4 N·m (55 kgf·cm, 48 in.·lbf)

7. INSPECT IDLE SPEED

Idle speed:

750 ± 50 rpm

(In N range and air conditioner OFF)

Downloaded from www.Manualslib.com manuals search engine

AX088-08

DIAGNOSIS SYSTEM

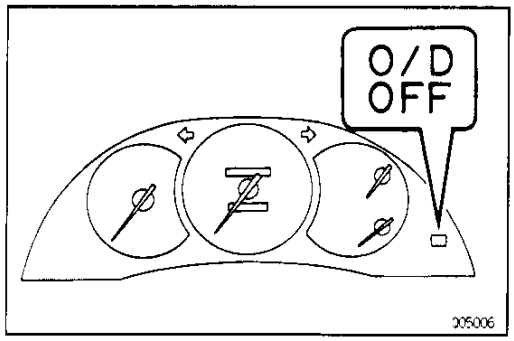

1. DESCRIPTION

(a) A self–diagnosis function is built into the electrical control system. Warning is indicated by the overdrive OFF indicator.
HINT: Warning and diagnostic codes can be read only when the overdrive switch is ON. If OFF, the overdrive OFF indicator is lit continuously and will not blink.

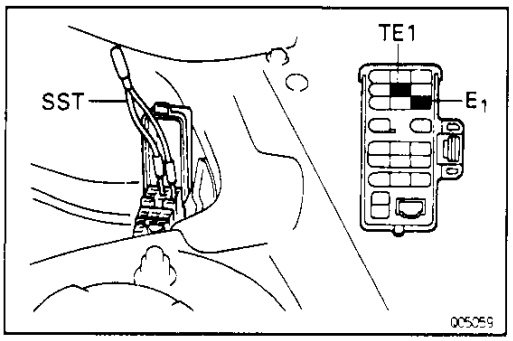

- If a malfunction occurs within the speed sensors or solenoids, the overdrive OFF light will blink to warn the driver.
  However, there will be no warning of a malfunction with lock–up solenoid.
- The diagnostic code can be read by the number of blinks of the overdrive OFF indicator when terminals TE1 and E1 are short–circuited. (See page AX–17)
- The throttle position sensor or brake signal are not indicated, but inspection can be made by checking the voltage at terminal TT of the check connector.
- The signals to each gear can be checked by measuring the voltage at terminal TT of the check connector while driving.

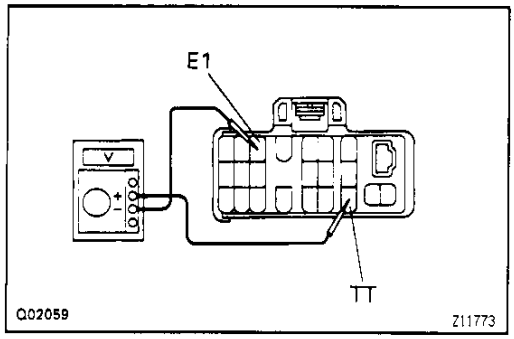

(b) The diagnostic (malfunction) code is retained in memory by the ECU and due to back–up voltage, is not canceled out when the engine is turned OFF. Consequently, after repair, it is necessary to turn the ignition switch OFF and remove the EFI fuse (15 A) or disconnect the ENGINE and ECT ECU connector to cancel out the diagnostic (malfunction) code. (See page AX–18)
HINT:
- Low battery voltage will cause faulty operation of the diagnosis system. Therefore, always check the battery first.
- Use a voltmeter and ohmmeter that have an impedance of at least 10 kΩ/V.

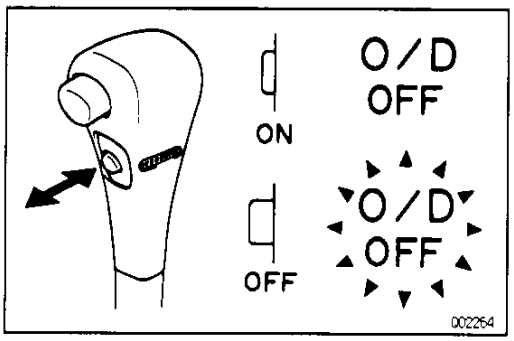

2. CHECK O/D OFF INDICATOR LIGHT

(a) Turn the ignition switch ON.
(b) The O/D OFF light will come on when the O/D switch is placed at OFF.
(c) When the O/D switch is set to ON, the O/D OFF light should go out.
If the O/D OFF light flashes when the O/D switch is set to ON, the electronic control system is faulty.

Downloaded from www.Manualslib.com manuals search engine

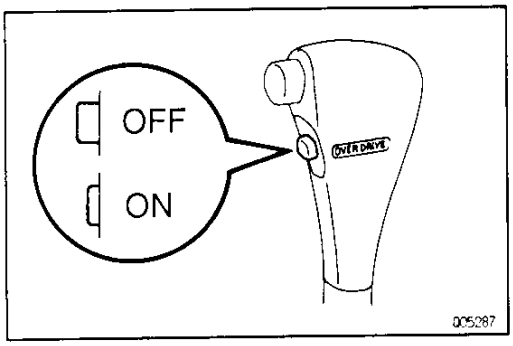

3. READ DIAGNOSTIC CODE

(a) Turn ignition switch and O/D main switch to ON. Do not start the engine.
HINT: Warning and diagnostic codes can be read only when the overdrive switch is ON. If OFF, the overdrive OFF light will light continuously and will not blink.

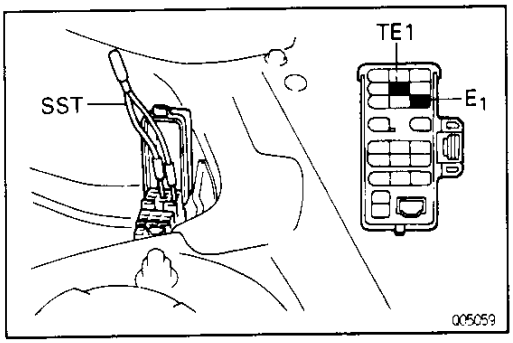

(b) Using SST, short terminals TE1and E1of the check-connector.
SST 09843–18020

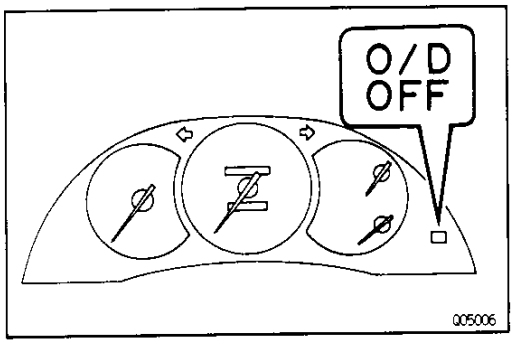

(c) Read the diagnostic code as indicated by the number of times the O/D OFF indicator flashes.

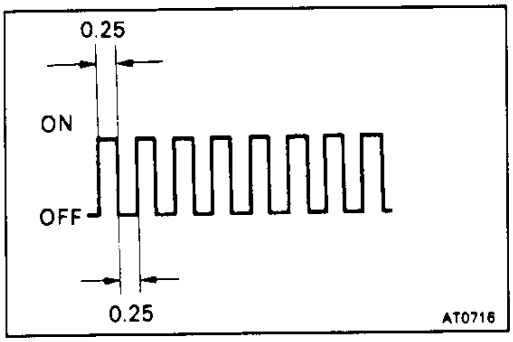

Diagnostic Code Indication

- If the system is operating normally, the light will blink once every 0.25 seconds.

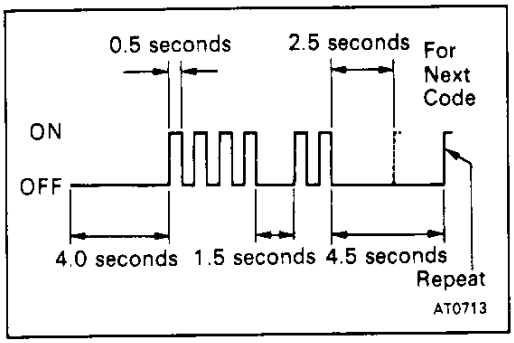

- In the event of a malfunction, the light will blink once every 0.5 seconds. The number of blinks will equal the 1st number and, after 1.5 seconds pause, the 2nd number of the 2 digit diagnostic code. If there are 2 or more codes, there will be a 2.5 seconds pause between each.

HINT: In the event of several trouble codes occurring simultaneously, indication will begin from the smaller value and continue to the larger.

(d) Remove SST.

AX

Downloaded from www.Manualslib.com manuals search engine

4. DIAGNOSTIC CODES

HINT: If codes 62, 63 or 64 appear, there is an electrical malfunction in the solenoid.
Causes due to mechanical failure, such as a stuck valve, will not appear.

Code No.	Light Pattern	Diagnosis System
–		Normal
42		Defective speed sensor (in ATM) – severed wire harness or short circuit
62		Severed No.1 solenoid or short circuit – severed wire harness or short circuit
63		Severed No.2 solenoid or short circuit – severed wire harness or short circuit
64		Severed lock-up soslenoid or short circuit – severed wire harness or short circuit

AT2020

V05184

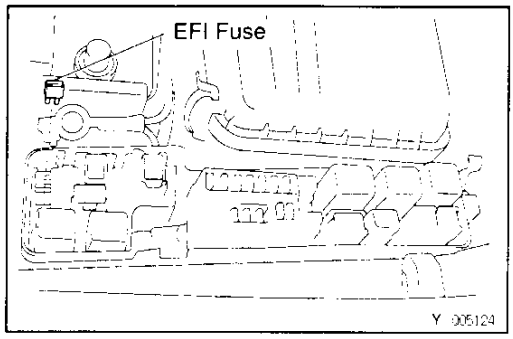

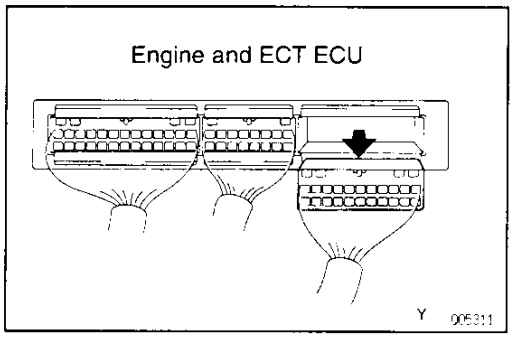

5. CANCEL OUT DIAGNOSTIC CODE

(a) After repair of the trouble area, the diagnostic code retained in memory by the Engine and ECT ECU must be canceled by removing the EFI fuse (15 A) for 10 seconds or more, depending on ambient temperature (the lower the temperature, the longer the fuse must be left out) with the ignition switch OFF.
HINT:
- Cancellation can be also done by removing the battery negative (−) terminal, but in this case other memory systems will be also canceled out.
- The diagnostic code can be also canceled out by disconnecting the Engine and ECT ECU connector.
- If the diagnostic code is not canceled out, it will be retained by the Engine and ECT ECU and appear along with a new code in the event of future trouble.

(b) After cancellation, perform a road test to confirm that a "normal code" is now read on the O/D OFF light.

Downloaded from www.Manualslib.com manuals search engine

AX0T6-01

DIAGNOSTIC CODE TROUBLESHOOTING FLOW—CHART

HINT:

- If diagnostic codes 42, 62 or 63 are output, the overdrive OFF indicator light will begin to blink immediately to warn the driver. However, an impact or shock may cause the blinking to stop; but the code will still be retained in the Engine and ECT ECU memory until canceled out.
- There is no warning for diagnostic code 64.
- In the event of a simultaneous malfunction of speed sensor, no diagnostic code will appear and the fail—safe system will not function. However when driving in the D range, the transaxle will not up—shift from first gear, regardless of the vehicle speed.

1. DIAGNOSTIC CODE 42 (SPEED SENSOR CIRCUITRY)

AX

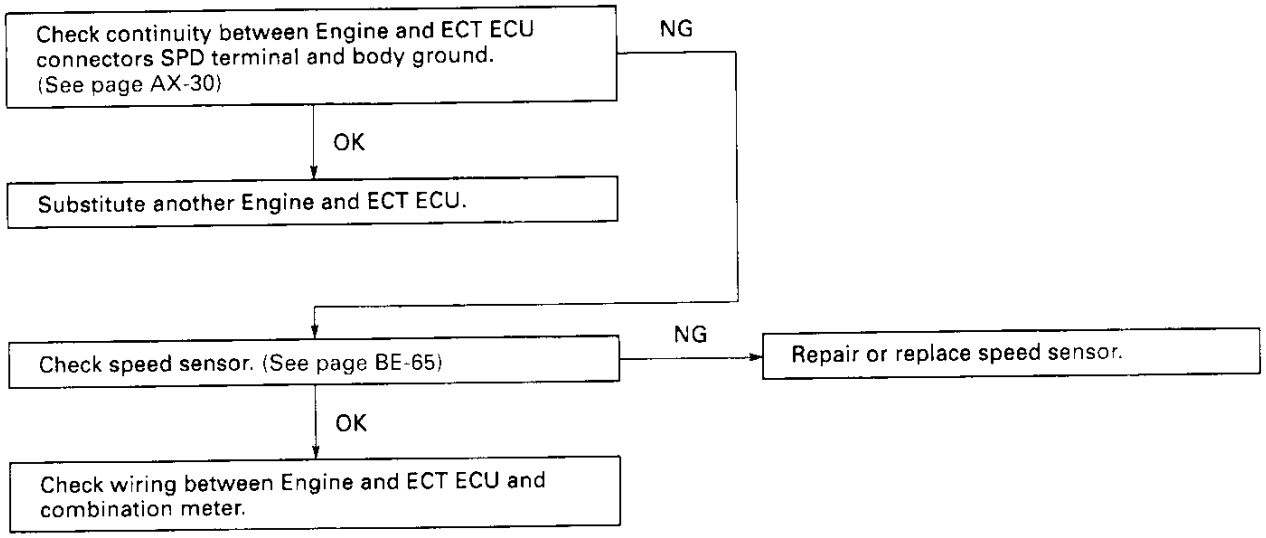

V05185

Downloaded from www.Manualslib.com manuals search engine

2. DIAGNOSTIC CODE 62 (NO.1 SOLENOID VALVE CIRCUITRY)

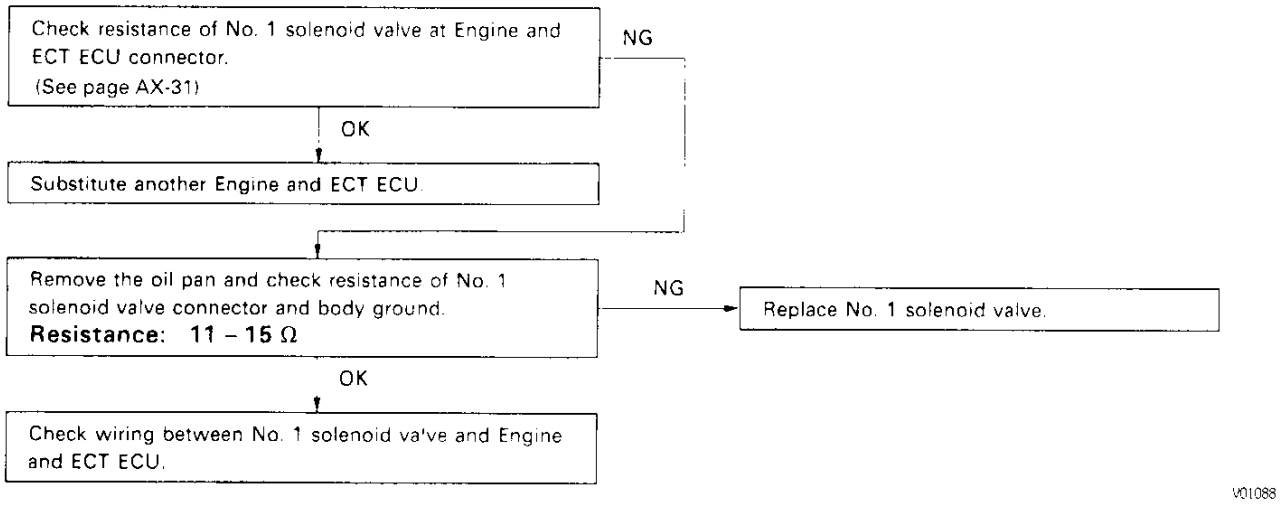

AX

3. DIAGNOSTIC CODE 63 (NO.2 SOLENOID VALVE CIRCUITRY)

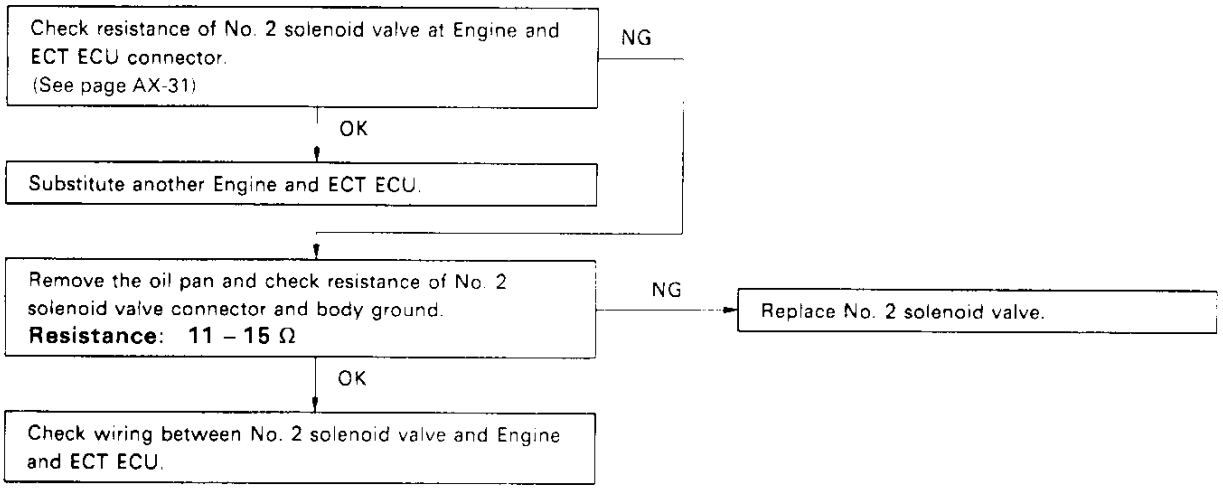

Downloaded from www.Manualslib.com manuals search engine

4. DIAGNOSTIC CODE 64 (LOCK–UP SOLENOID VALVE CIRCUITRY)

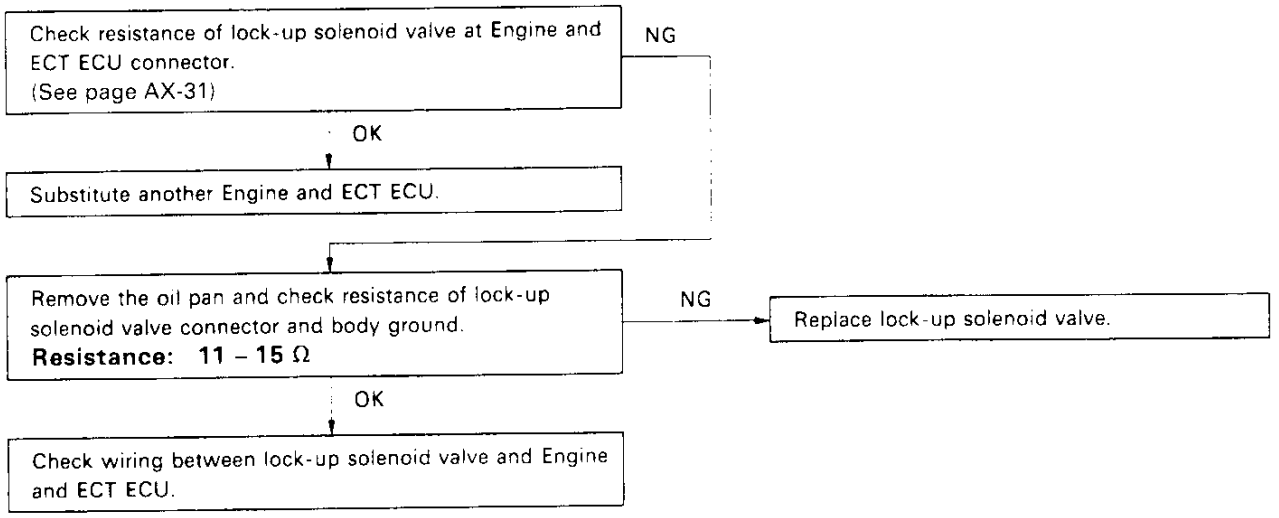

V01097

AX

Downloaded from www.Manualslib.com manuals search engine

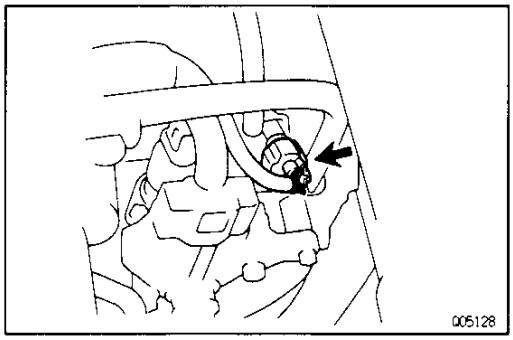

AX0480-03

MANUAL SHIFTING TEST

HINT: With this test, it can be determined whether the trouble lies within the electrical circuit or is a mechanical problem in the transaxle.

1. **DISCONNECT SOLENOID WIRE**
2. **INSPECT MANUAL DRIVING OPERATION**
   Check that the shift and gear positions correspond with the table below.

Shift position	Gear position
D range	O/D
2 range	3rd
L range	1st
R range	Reverse
P range	Pawl Lock

HINT: If the L, 2 and D range gear positions are difficult to distinguish, perform the following road test.

- While driving, shift through the L, 2 and D ranges.
  Check that the gear change corresponds to the shift position.

If any abnormality is found in the above test, the problem lies in transaxle itself.

3. **CONNECT SOLENOID WIRE**
4. **CANCEL OUT DIAGNOSTIC CODE**
   (See page AX–18)

AX

REFERENCE: Possible gear positions in accordance with solenoid operating conditions.

Range	NORMAL			No. 1 SOLENOID MALFUNCTIONING			No. 2 SOLENOID MALFUNCTIONING			BOTH SOLENOIDS MALFUNCTIONING		
	Solenoid Valve		Gear Position	Solenoid Valve		Gear Position	Solenoid Valve		Gear Position	Solenoid Valve		Gear Position
	No. 1	No. 2		No. 1	No. 2		No. 1	No. 2		No. 1	No. 2	
D range	ON	OFF	1st	X	ON	3rd	ON	X	1st	X	X	O/D
	ON	ON	2nd	X	ON	3rd	OFF	X	O/D	X	X	O/D
	OFF	ON	3rd	X	ON	3rd	OFF	X	O/D	X	X	O/D
	OFF	OFF	O/D	X	OFF	O/D	OFF	X	O/D	X	X	O/D
2 range	ON	OFF	1st	X	ON	3rd	ON	X	1st	X	X	3rd
	ON	ON	2nd	X	ON	3rd	OFF	X	3rd	X	X	3rd
	OFF	ON	3rd	X	ON	3rd	OFF	X	3rd	X	X	3rd
L range	ON	OFF	1st	X	OFF	1st	ON	X	1st	X	X	1st
	ON	ON	2nd	X	ON	2nd	ON	X	1st	X	X	1st

X: Malfunctions

V01085

Downloaded from www.Manualslib.com manuals search engine

AX08E - 06

ELECTRONIC CONTROL CIRCUIT

Do not open the cover or the case of the ECU and other computers unless absolutely necessary. (If the IC terminals are touched, the IC may be destroyed by static electricity.)

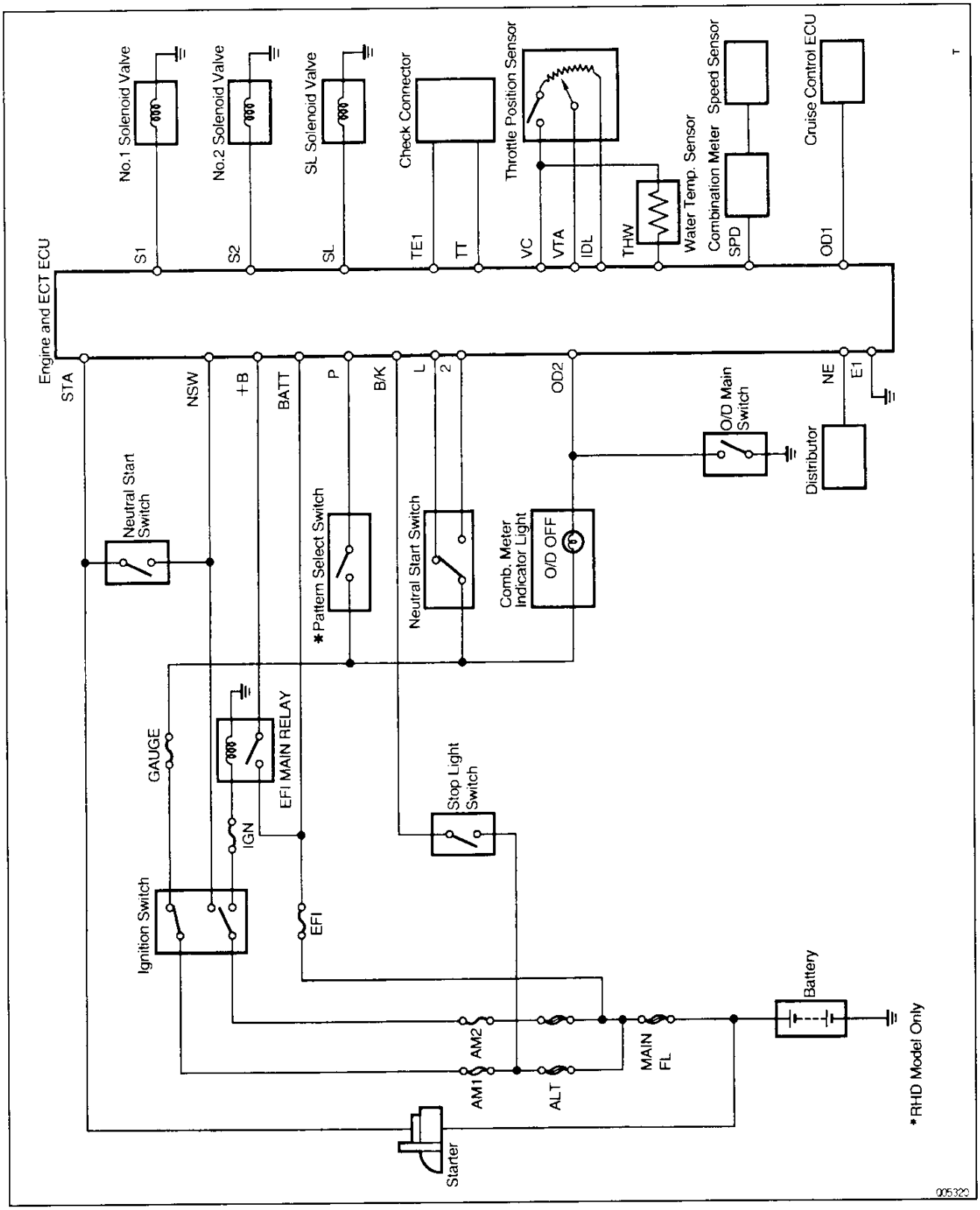

AX

Downloaded from www.Manualslib.com manuals search engine

AX068-02

ELECTRONIC CONTROL COMPONENTS

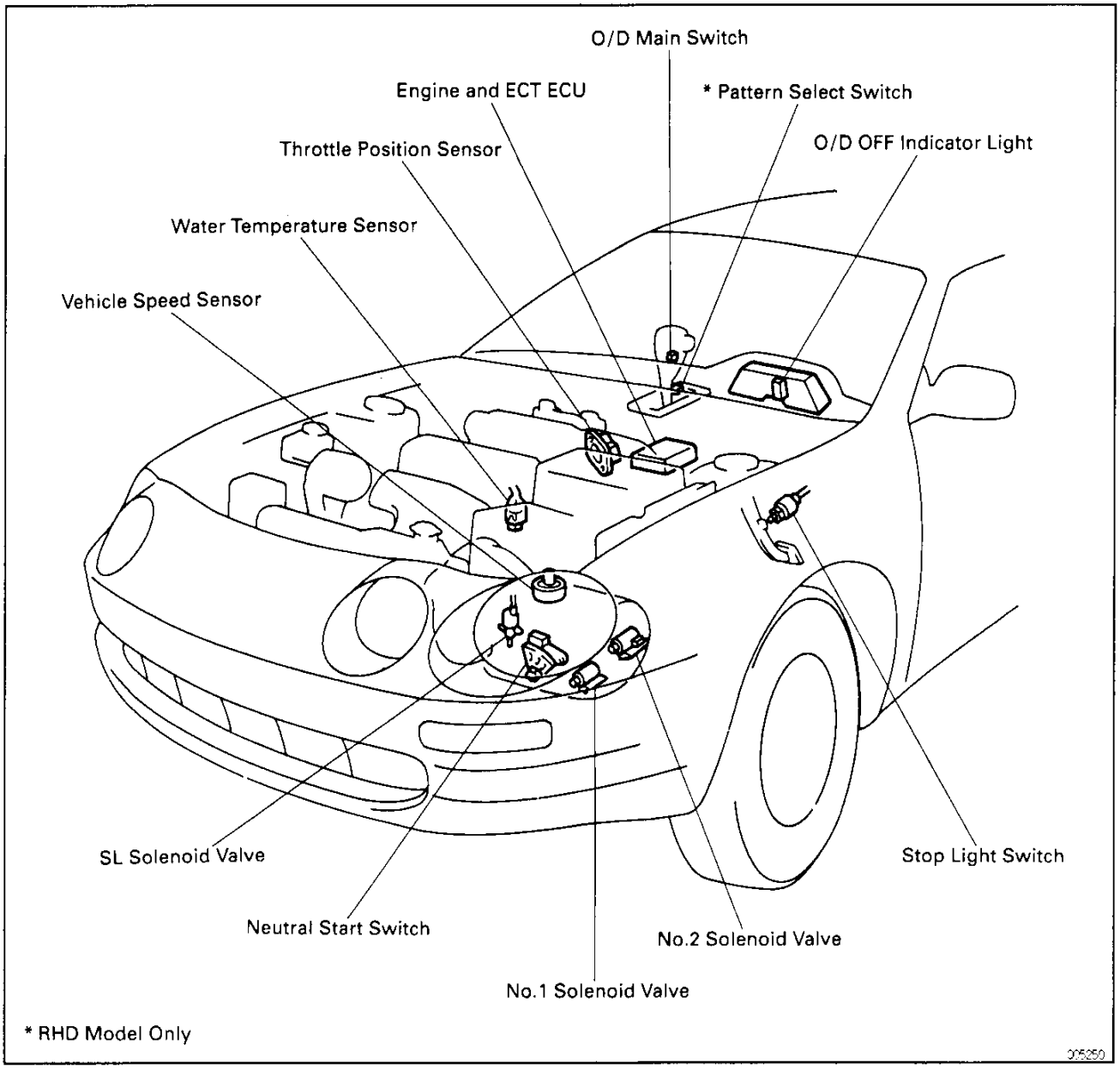

Downloaded from www.Manualslib.com manuals search engine

TROUBLESHOOTING FLOW—CHART

Trouble No.1 No shifting

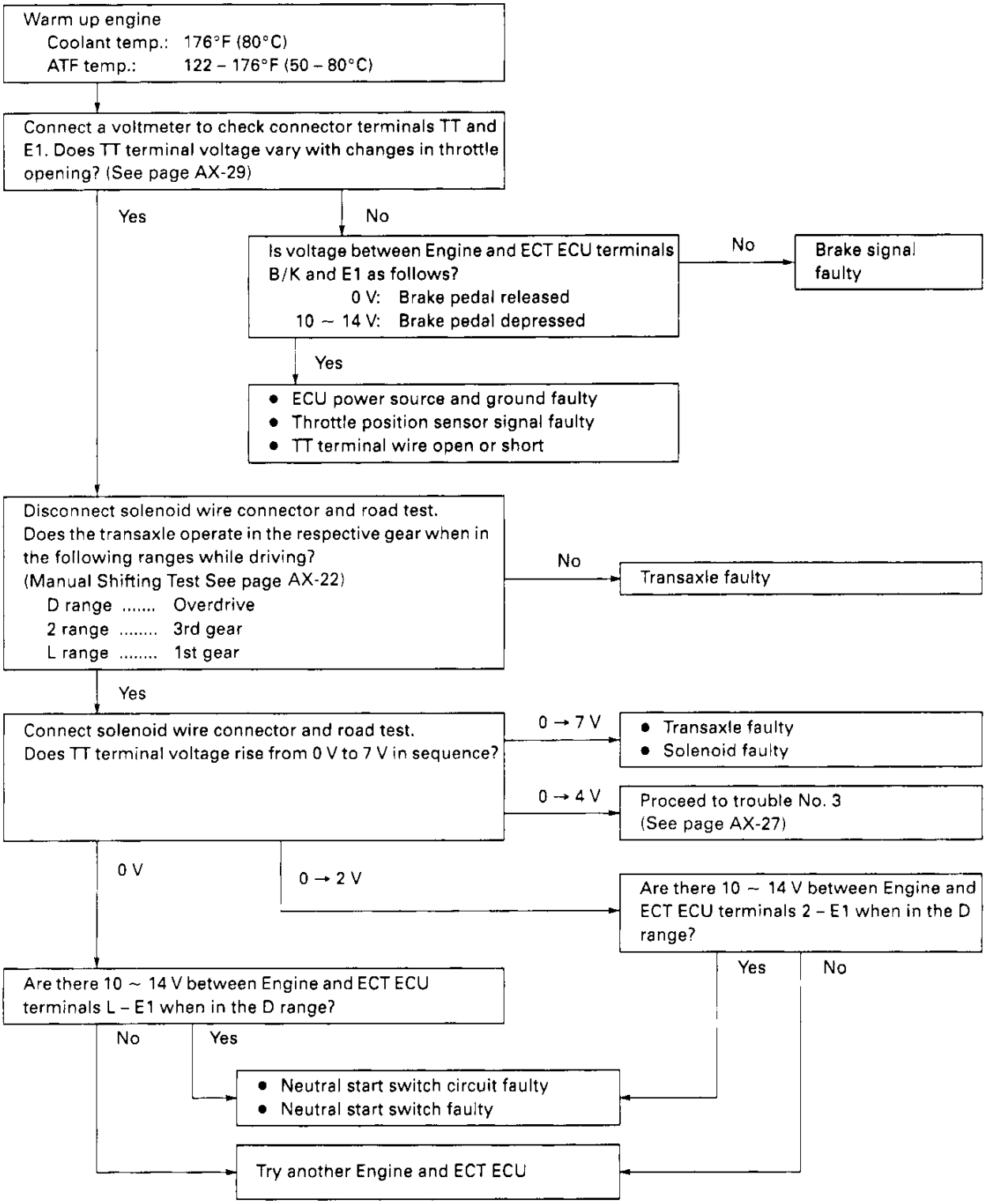

Downloaded from www.Manualslib.com manuals search engine

Trouble No.2 Shift point too high or too low

AX

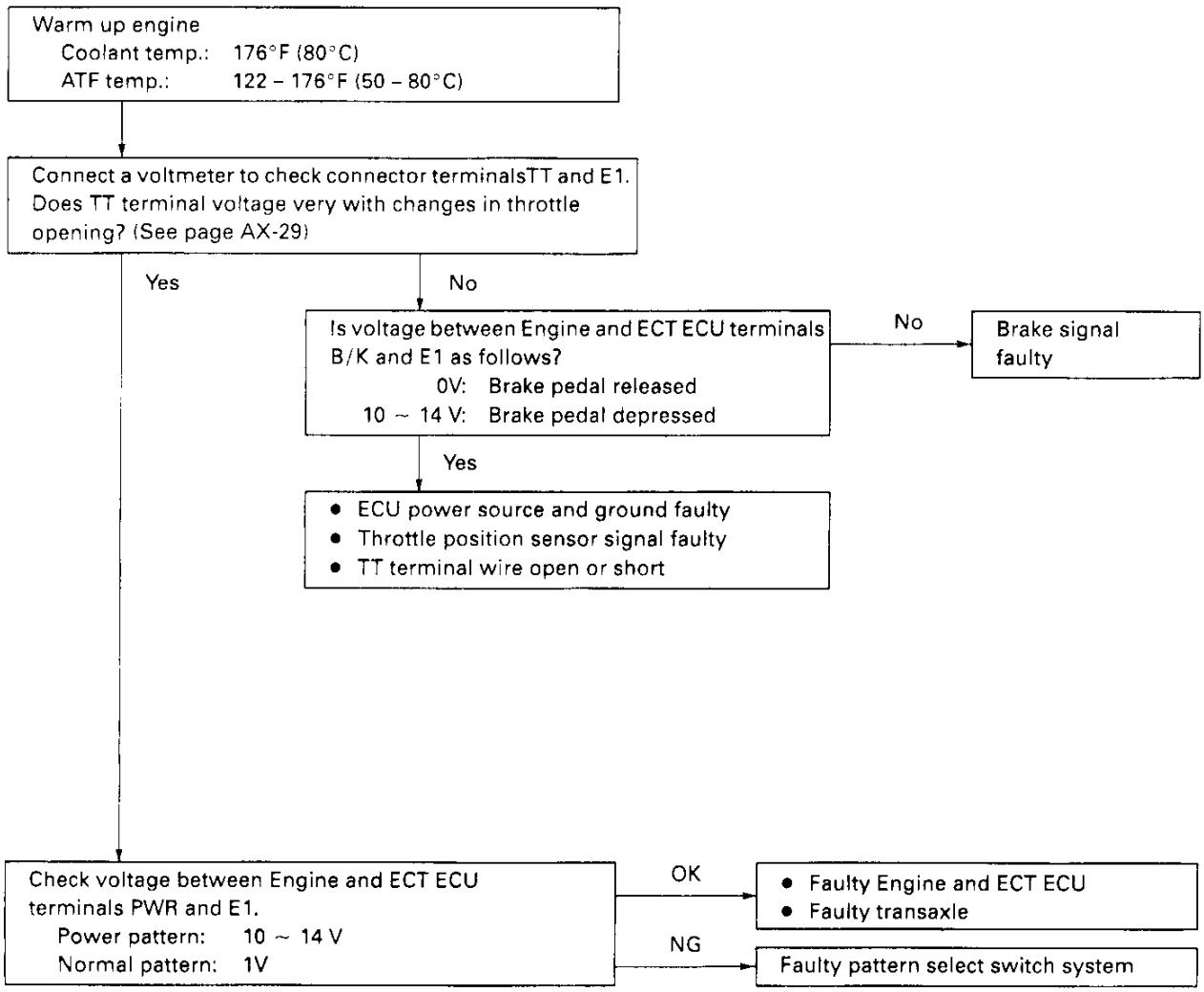

V05145

Downloaded from www.Manualslib.com manuals search engine

Trouble No.3 No up—shift to overdrive (After warm—up)

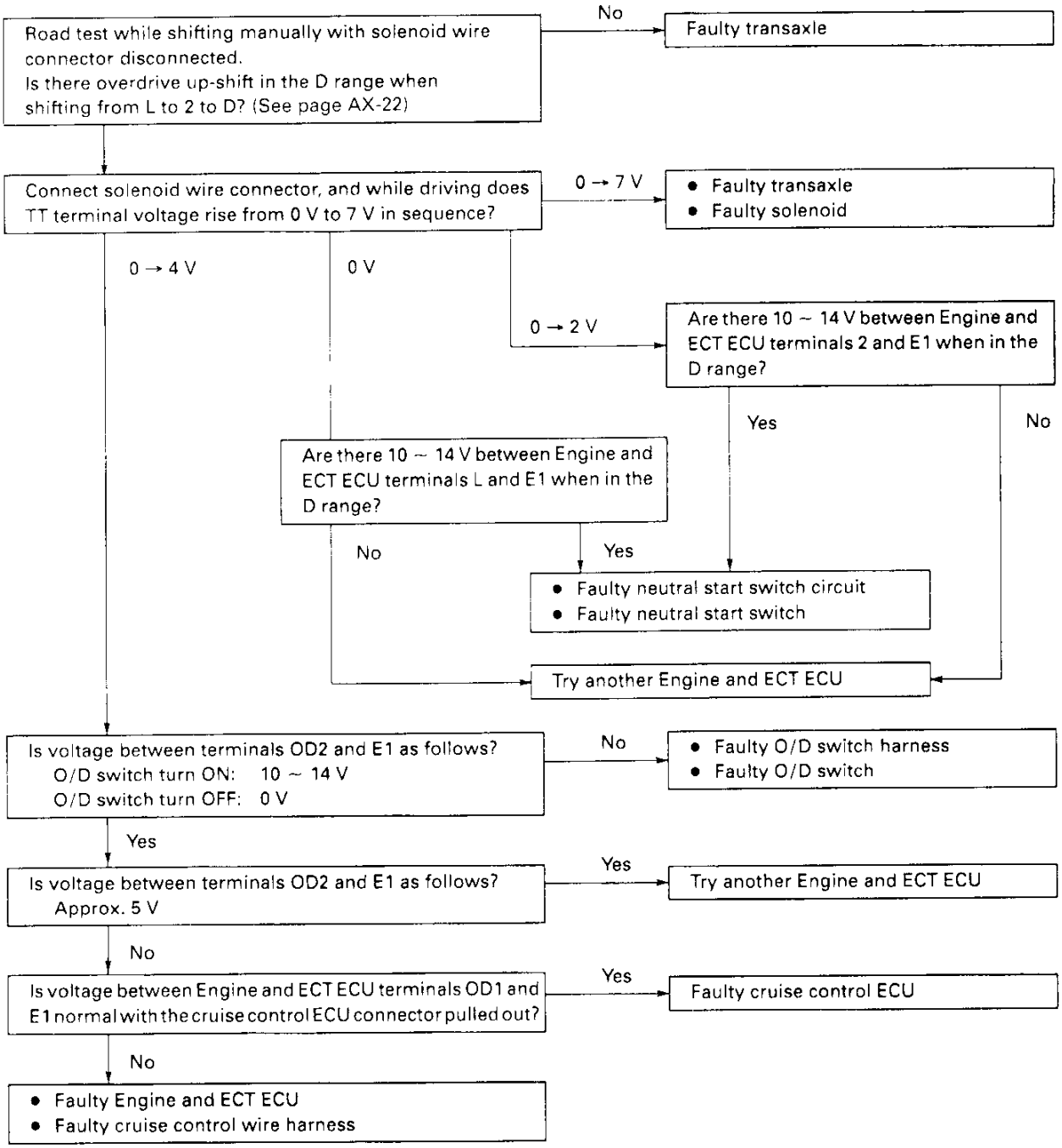

V05146

AX

Downloaded from www.Manualslib.com manuals search engine

Trouble No.4 No lock−up (After warm−up)

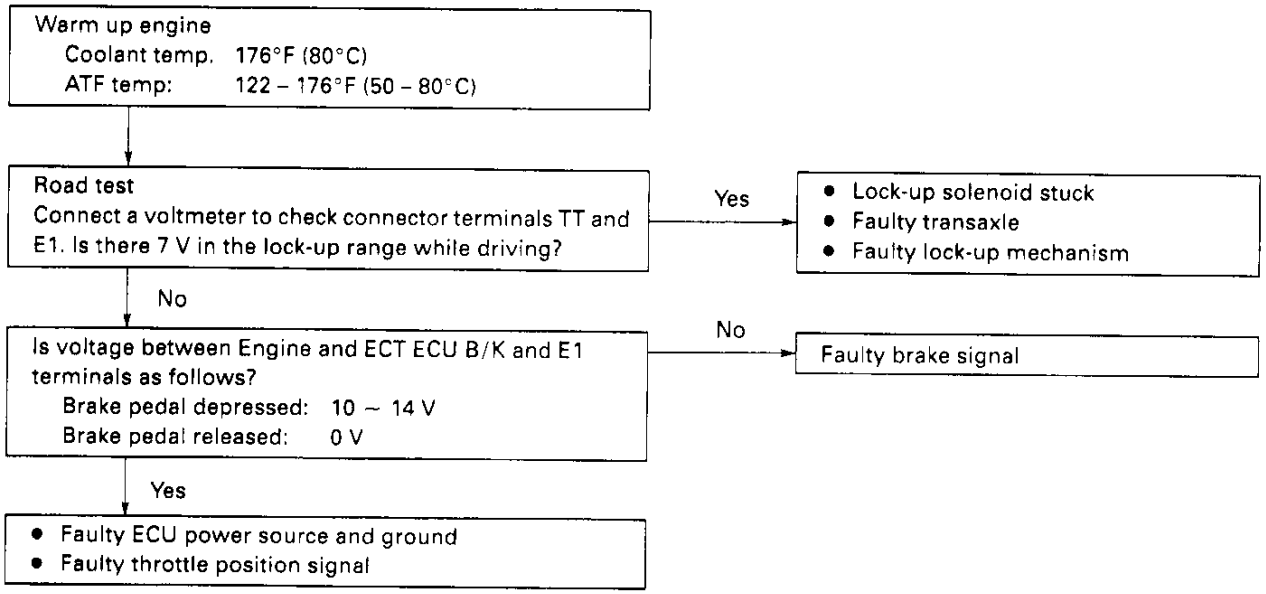

V05147

AX

Downloaded from www.Manualslib.com manuals search engine

AX687-02

TT TERMINAL INSPECTION

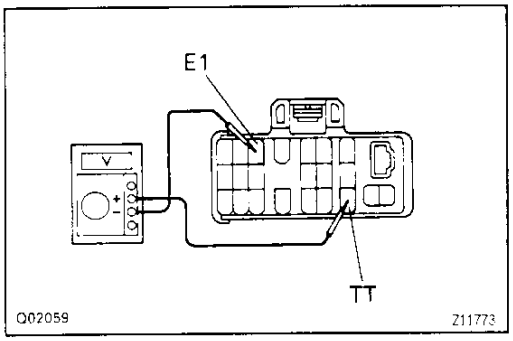

1. INSPECT THROTTLE POSITION SENSOR SIGNAL

(a) Turn the ignition switch ON.
Do not start the engine.

(b) Connect a voltmeter to terminals TT and E1.

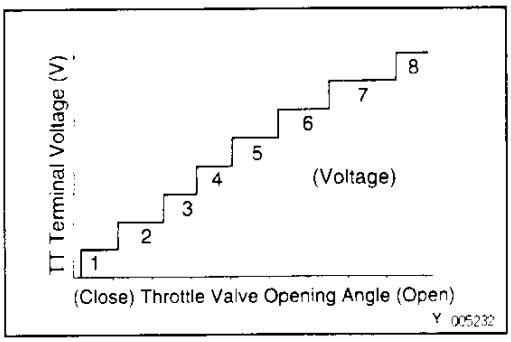

(c) While slowly depressing the accelerator pedal, check that TT terminal voltage rises, as shown.
If the voltage does not change in proportion to the throttle opening angle, there is a malfunction in the throttle position sensor or circuit.

AX

2. INSPECT BRAKE SIGNAL

(a) Depress the accelerator pedal until the TT terminal indicates 8 V.

(b) Depress the brake pedal and check the voltage reading from the TT terminal.

Brake pedal depressed

0 V

Brake pedal released

8 V

If not as indicated, there is a malfunction in either the stop light switch or circuit.

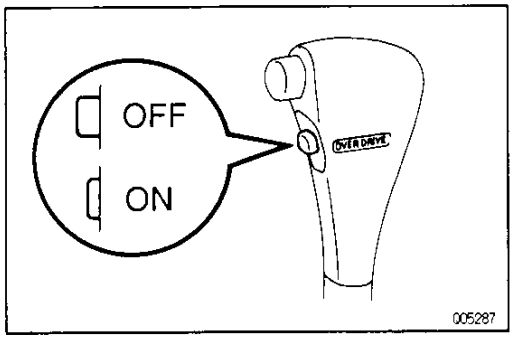

3. INSPECT EACH UP–SHIFT POSITION

(a) Warm up the engine.

Coolant temperature:

80°C (176°F)

(b) Turn the O/D switch ON.

(c) Place the shift lever into the D range.

(d) During a road test (above 10 km/h or 6 mph) check that voltage at the TT terminal is as indicated below for each up–shift position.

If the voltage increased from 0 V to 7 V in the sequence shown, the control system is okay.
The chart on the left shows the voltmeter reading and corresponding gears.
HINT: Determine the gear position by a light shock or change in engine rpm when shifting.

TT Terminal (V)	Gear position
0	1st
2	2nd
4	3rd
6	O/D
7	O/D Lock-up

V05148

Downloaded from www.Manualslib.com manuals search engine

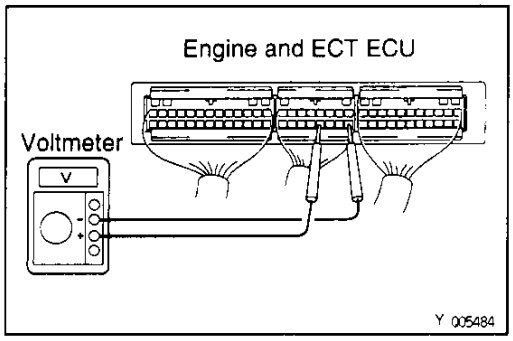

AX07T-01

ELECTRONIC CONTROL COMPONENTS INSPECTION

1. INSPECT VOLTAGE OF ENGINE AND ECT ECU CONNECTOR

(a) Turn the ignition switch ON.

(b) Do not disconnect Engine and ECT ECU connector. Measure the voltage at each terminal.

AX

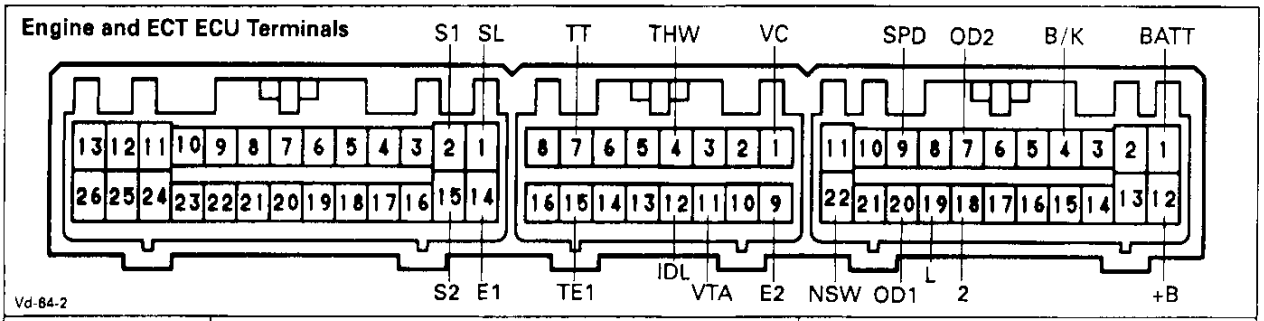

Terminal	Measuring condition		Voltage (V)
S1 – E1	Ignition switch turned ON		10 – 14
S2, SL – E1	Ignition switch turned ON		1 or less
B/K – E1	Brake pedal is depressed		10 – 14
	Brake pedal is released		1 or less
THW – E2	Water temp. 176°F (80°C)		0.1 – 0.8
IDL – E2	Throttle valve fully closed		1 or less
	Throttle valve open		4.5 – 5.5
VTA – E2	Throttle valve fully closed		0.1 – 0.8
	Throttle valve open		4.5 – 5.5
VC – E2	———		4.5 – 5.5
OD1 – E1	———		10 – 14
OD2 – E1	O/D main switch turned ON		10 – 14
	O/D main switch turned OFF		1 or less
SPD – E1	Cruise control main switch OFF	Standing still	1 or less
		Vehicle moving	Repeat: 0 ↔ 4.5 – 5.5
NSW – E1	P, N range		10 – 14
	R, D, 2, L range		1 or less
2 – E1	2 range		10 – 14
	Except 2 range		1 or less
L – E1	L range		10 – 14
	Except L range		1 or less
+B – E1	Ignition switch turned ON		10 – 14
BATT – E1	All conditions		10 – 14

V05149

Downloaded from www.Manualslib.com manuals search engine

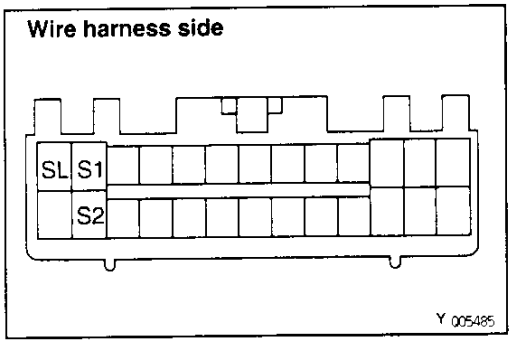

2. INSPECT SOLENOIDS

(a) Disconnect the connector from Engine and ECT ECU.

(b) Measure the resistance between S1, S2, SL and body ground.

Resistance:

11 – 15 Ω

(c) Apply battery voltage to each terminal.
Check that an operation noise can be heard from the solenoid.

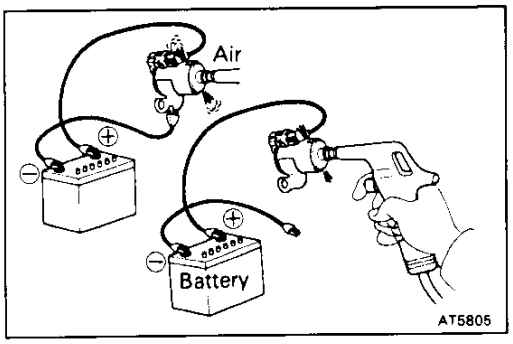

3. CHECK SOLENOID SEALS

If there is foreign material in the solenoid valve, there will be no fluid control even with solenoid operation.

Check No.1, No.2 and SL solenoid valves.

- Applying 490 kPa (5 kgf/cm², 71 psi) of compressed air, check that the solenoid valves do not leak the air.
- When battery voltage is supplied to the solenoids, check that the solenoid valves open.

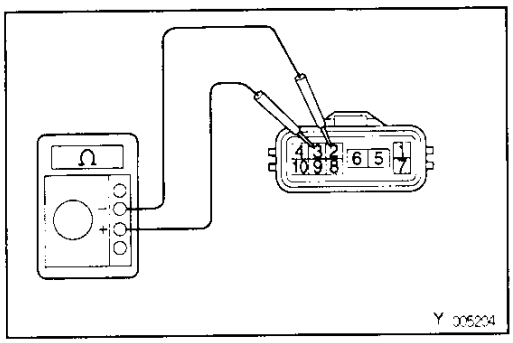

4. INSPECT NEUTRAL START SWITCH

Using an ohmmeter, check the continuity of the terminals for each switch position shown in the table below.

Range \ Terminal	6	5	4	7	8	10	9	2	3
P	○	○	○	○					
R			○		○				
N	○	○	○			○			
D			○				○		
2			○					○	
L			○						○

V05151

Downloaded from www.Manualslib.com manuals search engine

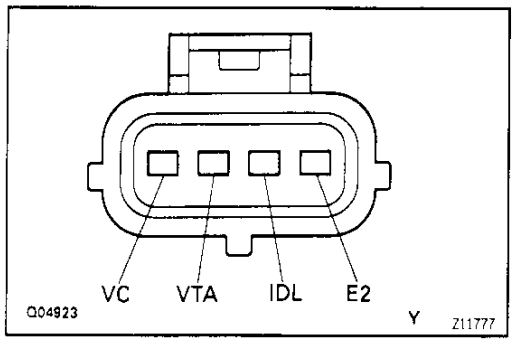

5. INSPECT THROTTLE POSITION SENSOR

Using an ohmmeter, check the resistance between each terminal.

Terminal	Throttle valve control	Resistance (kΩ)
IDL – E2	Fully closed	2.3
	Open	∞
VC – E2	–	2.5 – 5.9
VAT – E2	Fully closed	0.2 – 5.7
	Fully open	2.0 – 10.2

V05152

AX

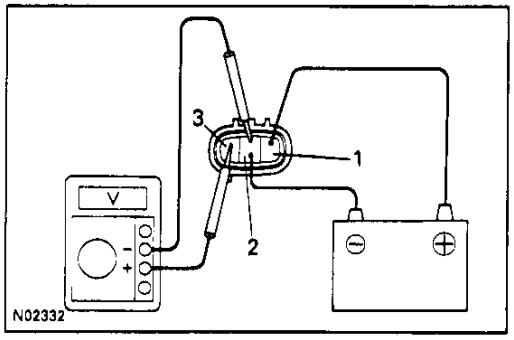

6. INSPECT SPEED SENSOR
(See page BE–65)

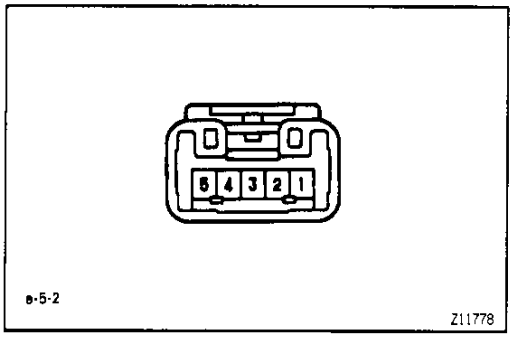

7. INSPECT PATTERN SELECT SWITCH

Check that there is continuity between terminals 2 and 3.

Switch position	Tester condition to terminal number	Specified value
NORM	2 – 3	Continuity
PWR	2 – 3	No continuity

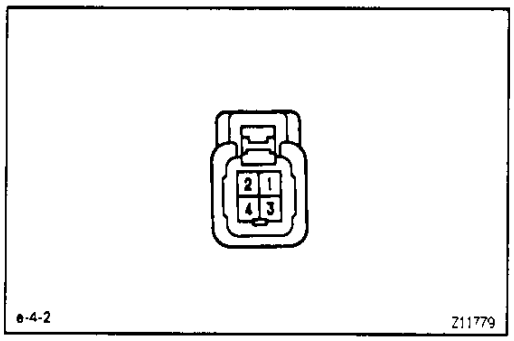

8. INSPECT O/D MAIN SWITCH

Inspect that there is continuity between terminals 2 and 4.

Switch position	Tester condition to terminal number	Specified value
ON	2 – 4	Continuity
OFF	2 – 4	No continuity

Downloaded from www.Manualslib.com manuals search engine

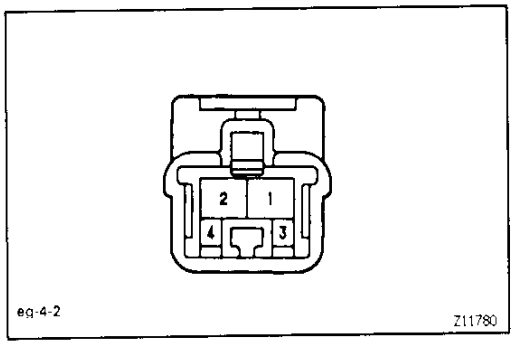

9. INSPECT STOP LIGHT SWITCH

Inspect that there is continuity between terminals 1 and 2.

Switch position	Tester condition to terminal number	Specified value
ON	1 — 2	Continuity
OFF	1 — 2	No continuity

AX

Downloaded from www.Manualslib.com manuals search engine

AX0T6-01

STALL TEST

The object of this test is to check the overall performance of the transaxle and engine by measuring the stall speeds in the D and R ranges.

NOTICE:

- **Perform the test at normal operation fluid temperature 50—80 °C (122—176 °F).**
- **Do not continuously run this test longer than 5 seconds.**
- **To ensure safety, conduct this test in a wide, clear, level area which provides good traction.**
- **The stall test should always be carried out in pairs. One should observe the condition of wheels or wheel stoppers outside the vehicle while the other is performing the test.**

MEASURE STALL SPEED

(a) Chock the front and rear wheels.

(b) Connect a tachometer to the engine.

AX

(c) Fully apply the parking brake.

(d) Keep your left foot pressed firmly on the brake pedal.

(e) Start the engine.

(f) Shift into the D range. Step all the way down on the accelerator pedal with your right foot. Quickly read the stall speed at this time.

Stall speed:

2,450±150 rpm (3S—FE, 5S—FE)

(g) Perform the same test in R range.

EVALUATION

(a) If the stall speed is the same for both ranges without the rear wheels rotating but lower than specified value:
- Engine output may be insufficient
- Stator one—way clutch is not operating properly

(b) If the stall speed in D range is higher than specified:
- Line pressure too low
- Forward clutch slipping
- No.2 one—way clutch not operating properly
- O/D one—way clutch not operating properly

(c) If the stall speed in R range is higher than specified:
- Line pressure too low
- Direct clutch slipping
- First and reverse brake slipping
- Rear clutch slipping

(d) If the stall speed in both R and D ranges are higher than specified:
- Line pressure too low
- Improper fluid level
- O/D direct clutch not operating properly

Downloaded from www.Manualslib.com manuals search engine

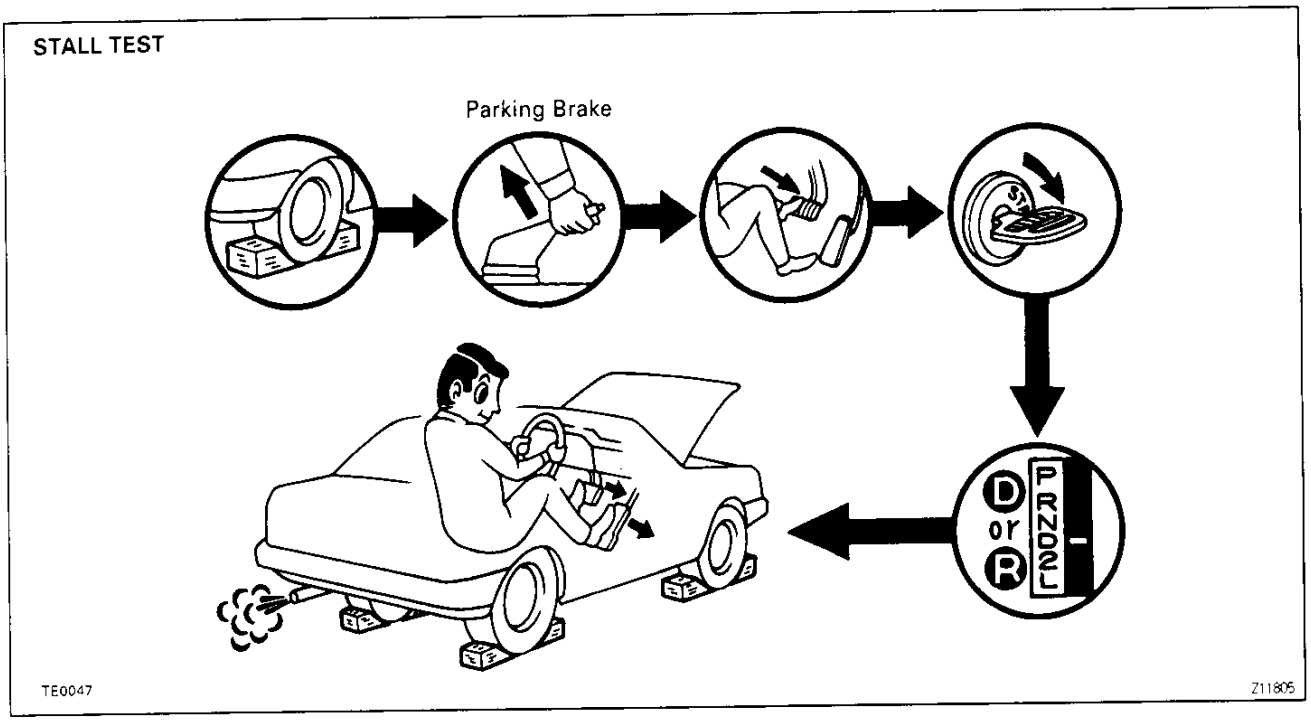

AX0T9-01

TIME LAG TEST

When the shift lever is shifted while the engine is idling, there will be a certain time lapse or lag before the shock can be felt. This is used for checking the condition of the O/D clutch, forward clutch, direct clutch and first and reverse brake.

NOTICE:

- **Perform the test at normal operating fluid temperature 50–80 °C (122–176 °F).**
- **Be sure to allow one minute interval between tests.**
- **Make three measurements and take the average value.**

MEASURE TIME LAG

(a) Fully apply the parking brake.

(b) Start the engine and check the idle speed.

Idle speed:

750 ± 50 rpm (In N range and air conditioner OFF)

(c) Shift the shift lever from N to D range. Using a stop watch, measure the time it takes from shifting the lever until the shock is felt.

Time lag:

Less than 1.2 seconds

(d) In the same manner, measure the time lag for N to R.

Time lag:

Less than 1.5 seconds

Downloaded from www.Manualslib.com manuals search engine

TIME LAG TEST

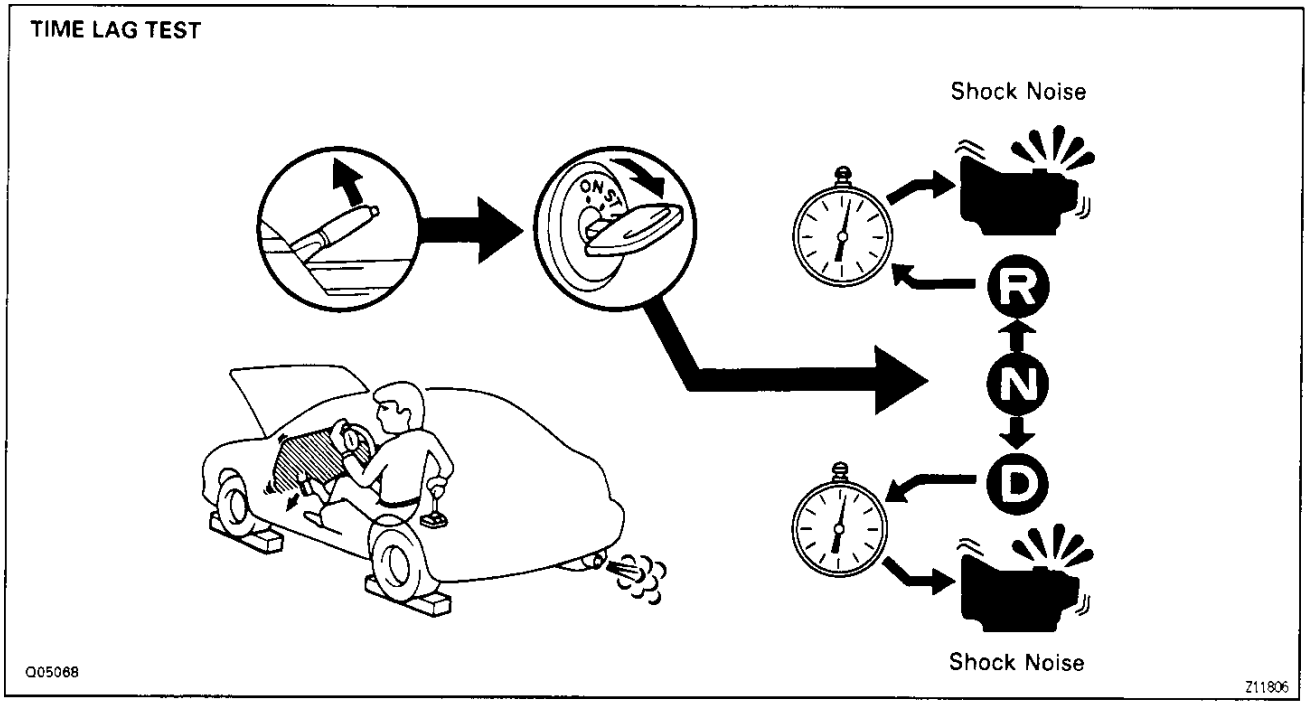

AX

EVALUATION

(a) If N→D time lag is longer than specified:
- Line pressure too low
- Forward clutch worn
- O/D one–way clutch not operating properly

(b) If N→R time lag is longer than specified:
- Line pressure too low
- Direct clutch worn
- First and reverse brake worn
- O/D one–way clutch not operating properly

Downloaded from www.Manualslib.com manuals search engine

HYDRAULIC TEST

PREPARATION

(a) Warm up the ATF.

(b) Remove the transaxle case test plug and connect the hydraulic pressure gauge.
SST 09992–00094 (Oil pressure gauge)

CAUTION:

- **Perform the test at normal operating fluid temperature 50–80 °C (122–176°F).**
- **The line pressure test should always be carried out in pairs. One should observe the conditions of wheels or wheel stoppers outside the vehicle while the other is performing the test.**

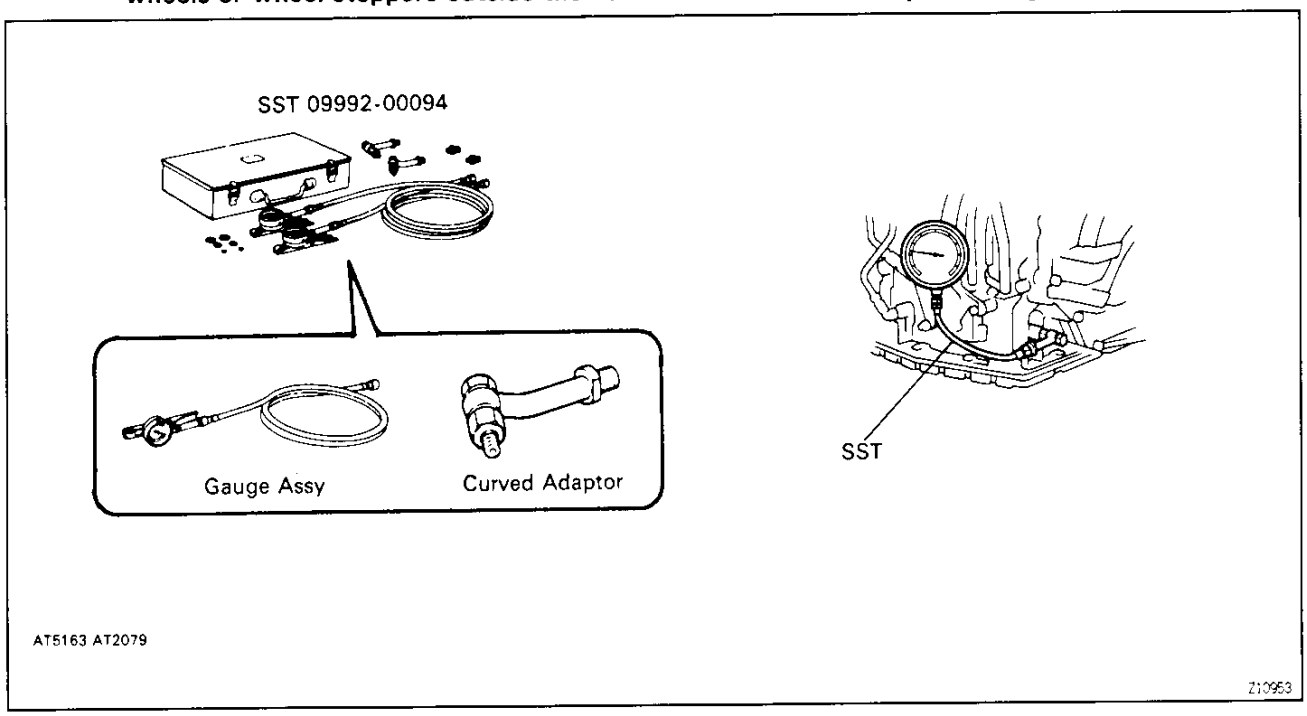

AX

Downloaded from www.Manualslib.com manuals search engine

MEASURE LINE PRESSURE

(a) Fully apply the parking brake and chock the front wheels.
(b) Start the engine and check idling rpm.
(c) Step down strongly on the brake pedal with your left foot and shift into D range.
(d) Measure the line pressure when the engine is idling.
(e) Press the accelerator pedal all the way down. Quickly read the highest line pressure when engine speed reaches stall speed.
(f) In the same manner, perform the test in R range.

3S–FE:

Automatic Transaxle	Idling kPa (kgf/cm², psi)	Stall kPa (kgf/cm², psi)
D Range	363–422 (3.7–4.3, 53–61)	736–863 (7.5–8.8, 106–125)
R Range	530–706 (5.4–7.2, 76–102)	1,158–1,344 (11.8–13.7, 168–195)

AX

5S–FE:

Automatic Transaxle	Idling kPa (kgf/cm², psi)	Stall kPa (kgf/cm², psi)
D Range	363–422 (3.7–4.3, 53–61)	736–863 (7.5–8.8, 106–125)
R Range	618–794 (6.3–8.1, 90–115)	1,373–1,608 (14.0–16.4, 199–233)

If the measured pressures are not up to specified value, recheck the throttle cable adjustment and perform a retest.

EVALUATION

(a) If the measured values at all ranges are higher than specified:
- Throttle cable out of adjustment
- Throttle valve defective
- Regulator valve defective

(b) If the measured values at all ranges are lower than specified:
- Throttle cable out of adjustment
- Throttle valve defective
- Regulator valve defective
- Oil pump defective
- O/D direct clutch defective

(c) If pressure is low in the D range only:
- D range circuit fluid leakage
- Forward clutch defective

(d) If pressure is low in the R range only:
- R range circuit fluid leakage
- Direct clutch defective
- First and reverse brake defective

Downloaded from www.Manualslib.com manuals search engine

AX08N-05

ROAD TEST

NOTICE: Perform the test at normal operating fluid temperature 50–80 °C (122–176°F).

1. **D RANGE TEST IN NORM AND PWR PATTERN RANGES**

Shift into the D range and hold the accelerator pedal constant at the full throttle valve opening position.
Check the following:

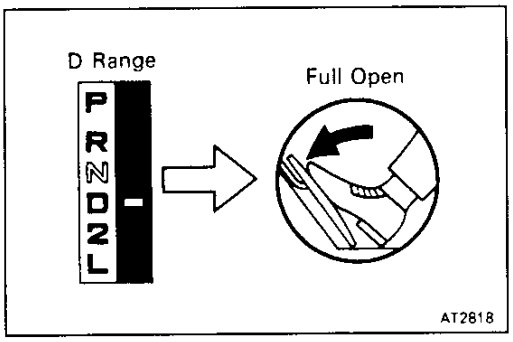

(a) 1–2, 2–3 and 3–O/D up–shifts should take place, and shift points should conform to those shown in the automatic shift schedule. (See page AX–42)
HINT:
- There is no O/D up–shift and lock–up when the water temp. is below 55°C (131°F).
- There is not lock–up when the vehicle speed is 10 km/h (6 mph) less than the set cruise control speed.

EVALUATION

(1) If there is no 1→2 up–shift:
- No.2 solenoid is stuck
- 1–2 shift valve is stuck

(2) If there is no 2→3 up–shift:
- No.1 solenoid is stuck
- 2–3 shift valve is stuck

(3) If there is no 3→O/D up–shift:
- 3–4 shift valve is stuck

(4) If the shift point is defective:
- Throttle valve, 1–2 shift valve, 2–3 shift valve, 3–4 shift valve etc., are defective

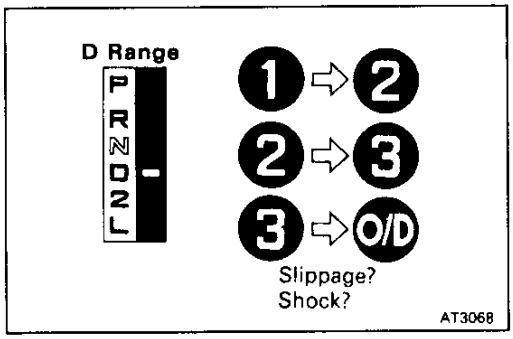

(5) If the lock–up is defective:
- Lock–up solenoid is stuck
- Lock–up relay valve is stuck

(b) In the same manner, check the shock and slip at the 1→2, 2→3 and 3→O/D up–shifts.

EVALUATION

If the shock is excessive:
- Line pressure is too high
- Accumulator is defective
- Check ball is defective

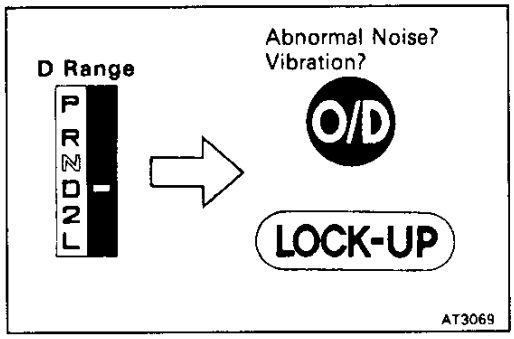

(c) Run at the D range lock–up or O/D gear and check for abnormal noises and vibration.
HINT: The check for the cause of any abnormal noise and vibration must be made with extreme care as it could also be due to loss of balance in the drive shaft, tire, torque converter, etc.

AX

Downloaded from www.Manualslib.com manuals search engine

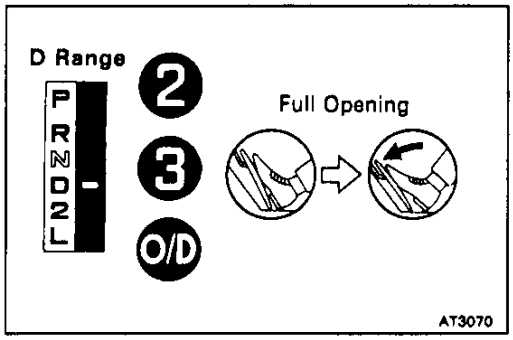

(d) While running in the D range, 2nd, 3rd and O/D gears, check to see that the possible kick—down vehicle speed limits for 2→1, 3→2 and O/D→3 kick—downs conform to those indicated on the automatic shift schedule. (See page AX—42)

(e) Check for abnormal shock and slip at kick—down.

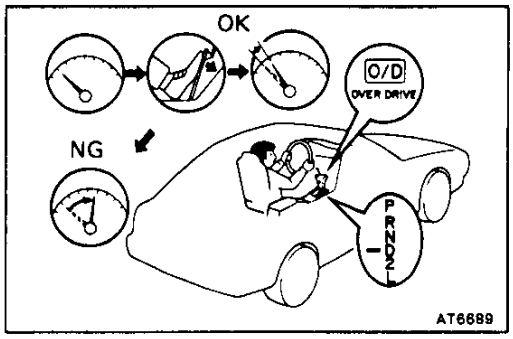

(f) Check for the lock—up mechanism.

(1) Drive in D range, O/D gear, at a steady speed (lock—up ON) of about 75 km/h (47 mph).

(2) Lightly depress the accelerator pedal and check that the engine rpm does not change abruptly.

If there is a big jump in engine rpm, there is no lock—up.

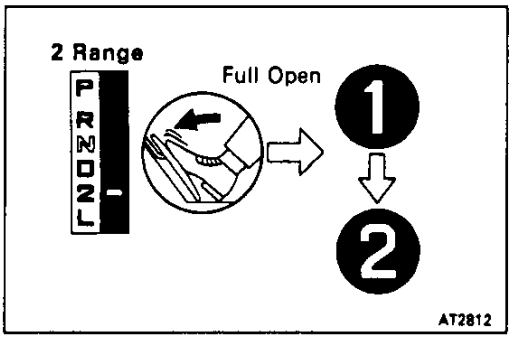

2. 2 RANGE TEST

Shift into the 2 range and, while driving with the accelerator pedal held constantly at the full throttle valve opening position, push in one of the pattern selectors and check on the following points.

(a) Check to see that the 1→2 up—shift takes place and that the shift point cnforms to that shown on the automatic shift schedule. (See Page AX—42)

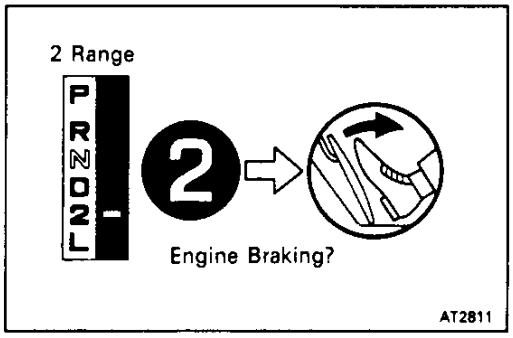

(b) While running in the 2 range and 2nd gear, release the accelerator pedal and check the engine braking effect.

EVALUATION

If there is no engine braking effect:

- Second coast brake is defective

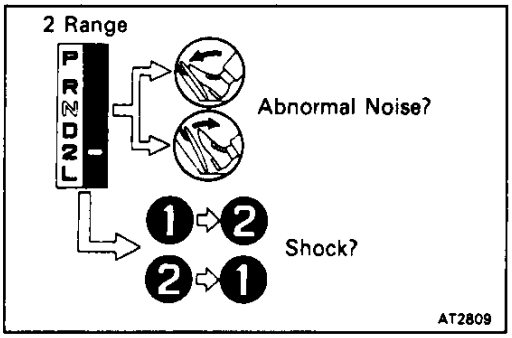

(c) Check for abnormal noises during acceleration and deceleration, and for shock at up—shift and down—shift.

Downloaded from www.Manualslib.com manuals search engine

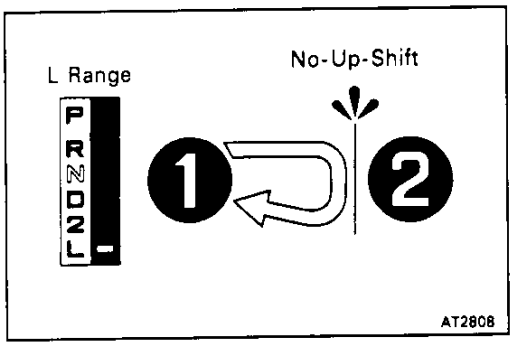

3. L RANGE TEST

(a) While running in the L range, check to see that there is no up–shift to 2nd gear.

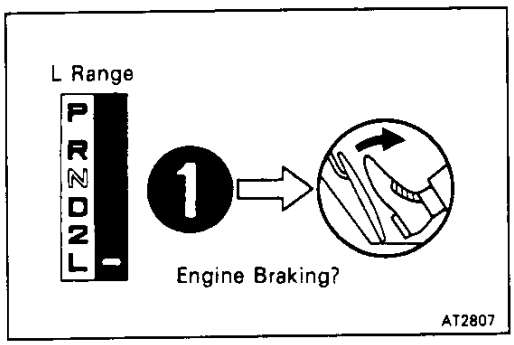

(b) While running in the L range, release the accelerator pedal and check the engine braking effect.

EVALUATION

If there is no engine braking effect:

- First and reverse brake is defective

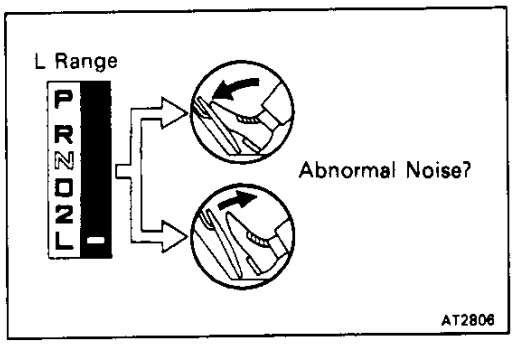

(c) Check for abnormal noises during acceleration and deceleration.

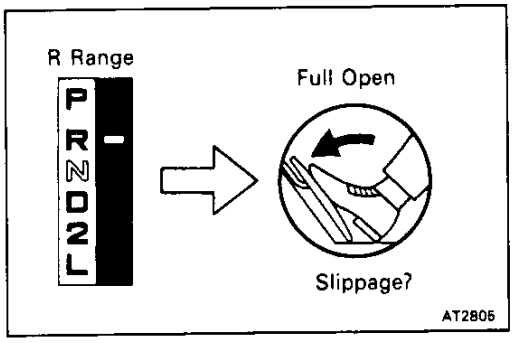

4. R RANGE TEST

Shift into R range and, while starting at full throttle, check for slipping.

CAUTION: Before conducting this test ensure that the test area is free from personnel and obstructions.

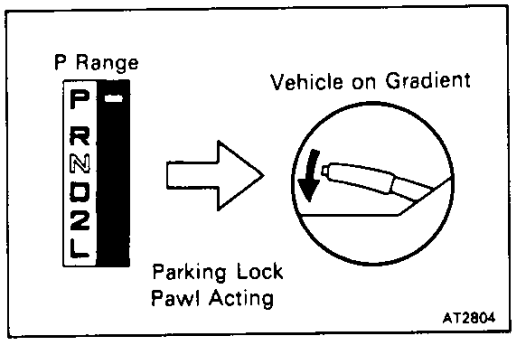

5. P RANGE TEST

Stop the vehicle on a gradient (more than 5°) and after shifting into the P range, release the parking brake. Then check to see that the parking lock pawl holds the vehicle in place.

Downloaded from www.Manualslib.com manuals search engine

AUTOMATIC SHIFT SCHEDULE

AX0TA-01

SHIFT POINT

LHD MODEL (3S-FE)

Shift range	Shifting point		Vehicle speed km/h (mph)
D range	Throttle valve fully opened	1→2	55-64 (34-40)
		2→3	100-115 (62-71)
		3→O/D	136-153 (85-95)
		O/D→3	129-145 (80-90)
		3→2	92-106 (57-66)
		2→1	39-46 (24-29)
	Throttle valve fully closed	3→O/D	32-38 (20-24)
		O/D→3	15-20 (9-12)
2 range	Throttle valve fully opened	1→2	55-64 (34-40)
		2→1	39-46 (24-29)
L range	Throttle valve fully opened	2→1	47-54 (29-34)

AX

RHD MODEL (5S-FE)

NORM MODE

Shift range	Shifting point		Vehicle speed km/h (mph)
D range	Throttle valve fully opened	1→2	53-59 (33-37)
		2→3	99-108 (62-68)
		3→O/D	142-152 (89-95)
		O/D→3	132-142 (83-89)
		3→2	89-98 (56-61)
		2→1	41-46 (26-29)
	Throttle valve fully closed	3→O/D	39-44 (24-27)
		O/D→3	19-23 (12-14)
2 range	Throttle valve fully opened	1→2	53-59 (33-37)
		2→1	41-46 (26-29)
L range	Throttle valve fully opened	2→1	45-50 (28-31)

PWR MODE

Shift range	Shifting point		Vehicle speed km/h (mph)
D range	Throttle valve fully opened	1→2	53-59 (33-37)
		2→3	99-108 (62-68)
		3→O/D	142-152 (89-95)
		O/D→3	132-142 (83-89)
		3→2	89-98 (56-61)
		2→1	41-46 (26-29)
	Throttle valve fully closed	3→O/D	53-58 (33-36)
		O/D→3	19-23 (12-14)
2 range	Throttle valve fully opened	1→2	53-59 (33-37)
		2→1	41-46 (26-29)
L range	Throttle valve fully opened	2→1	45-50 (28-31)

Downloaded from www.Manualslib.com manuals search engine

LOCK–UP POINT

LHD MODEL (3S–FE)

D range Throttle valve opening 3%	Lock–up ON km/h (mph)	Lock–up OFF km/h (mph)
3rd Gear	* 59–68 (37–42)	* 56–64 (35–40)
O/D Gear	70–80 (43–50)	56–64 (35–40)

RHD MODEL (5S–FE)

NORM MODE

D range Throttle valve opening 3%	Lock–up ON km/h (mph)	Lock–up OFF km/h (mph)
3rd Gear	* 65–71 (40–44)	* 60–65 (37–40)
O/D Gear	65–71 (40–44)	60–65 (37–40)

AX

PWR MODE

D range Throttle valve opening 3%	Lock–up ON km/h (mph)	Lock–up OFF km/h (mph)
3rd Gear	* 65–71 (41–44)	* 60–65 (38–41)
O/D Gear	76–82 (48–51)	70–75 (44–47)

*O/D main switch OFF

HINT:

(1) In the 2 and L range, all stages lock–up is OFF.

(2) In the following cases, the lock–up will be released regardless of the lock–up pattern.
- When the throttle is completely closed.
- When the brake switch is ON.

(3) Shift up to O/D will not occur when the water temp. is below 55°C (131°F).

Downloaded from www.Manualslib.com manuals search engine

TROUBLESHOOTING MATRIX CHART

AX040G-04

Use the table below to help you find the cause of the problem. The numbers indicate the priority of the likely cause of the problem. Check each part in order. If necessary, replace these parts.

AX

Trouble \ Parts Name		Electrical control system check	Torque converter	Parking lock pawl	Manual valve	1-2 shift valve	2-3 shift valve	Forward clutch (C_1)	Direct clutch (C_2)	No.2 one-way clutch (F_2)	Front planetary gear	Rear planetary gear	1st and reverse brake (B_3)	O/D one-way clutch (F_3)	O/D clutch (C_3)	O/D planetary gear	Second brake (B_2)	2nd coast brake (B_1)	O/D brake (B_0)	No.1 one-way clutch (F_1)	3-4 shift valve	Accumulator control valve	C_1 accumulator	Low coast modulator valve	E2 accumulator	2nd coast modulator valve	Throttle modulator valve
See Page		AX 23	AX 68	★	★	★	★	★	★	★	★	★	★	★	★	★	★	★	★	★	★	★	★	★	★	★	★
Does not move in any forward range								1	5	2			3				4	4									
Does not move in reverse range						3	4		5		2	2	7		6			1									
Does not move in any forward range or reverse range			7	1	2						5	5		3	3	6			4								
No-up shift	1st → 2nd	1				2											3			4							
	2nd → 3rd	1					2		3																		
	3rd → O/D	1																	2		3						
No-down shift	O/D → 3rd	1																			2						
	3rd → 2nd	1					2											3									
	2nd → 1st	1				2																					
Shift point too high or too low		1																									
Up-shifts 3rd → O/D with O/D switch "OFF"		1																									
Up-shifts 3rd → O/D when E/G is cold		1																									
Harsh engagement	"N" → "R"												2									3					
	"N" → "D"							1															2				
	"N" → "L"																							1			
	1st → 2nd ("D" range)												2												1		
	1st → 2nd (2 range)																									1	
	1st → 2nd → 3rd																					1					2

★ Refer to Automatic Transaxle Repair Manual. (Pub. No. RM248E)

Downloaded from www.Manualslib.com manuals search engine

Trouble \ Parts Name		Electrical control system check	Accumulator control valve	2nd coast brake (B_1)	C_2 accumulator	O/D clutch (C_3)	O/D brake (B_4)	O/D planetary gear	B_4 accumulator	C_3 accumulator	2nd coast modulator valve	B_2 accumulator	1st and reverse brake	Lock-up relay valve	Torque converter	O/D one-way clutch (F_3)	Oil strainer	Pressure relief valve	Direct clutch (C_2)	Forward clutch (C_1)	No.2 one-way clutch (F_2)	Second brake (B_2)	No.1 one-way clutch (F_1)	Low coast modulator valve
	See page	AX-23	★	★	★	★	★	★	★	★	★	★	★	★	AX-68	★	AX-47	★	★	★	★	★	★	★
Harsh engagement	1st → 2nd → 3rd → O/D		1																					
	2nd → 3rd			1	2																			
	3rd → O/D					1	2	3	4															
	O/D → 3rd								1	2														
	3rd → 2nd								1	2	3	4	5											
No lock-up		1												2	3									
No lock-up OFF		1												2	3									
Slip or shudder	Forward & Reverse (After warm-up)					3									1	2								
	Forward & Reverse (Directry after E/G start)														1		3	2						
	"R" range					2							3						1					
	1st																			1	2			
	2nd				1																	2	3	
	2nd → 3rd (up-shift)																		1					
	3rd																		1					
	O/D						1																	
No engine braking	1st ~ 3rd					1																		
	1st												2											1
	2nd			1							2													

V05154

★ Refer to Automatic Transaxle Repair Manual. (Pub. No. RM248E)

AX

Downloaded from www.Manualslib.com manuals search engine

AX

Trouble \ Parts Name		Electrical control system check	2nd coast brake (B_1)	O/D clutch (C_3)	O/D brake (B_4)	O/D planetary gear	1st and reverse brake (B_3)	Torque converter	Direct clutch (C_2)	Forward clutch (C_1)	Second brake (B_2)	1-2 shift valve	2-3 shift valve	3-4 shift valve
See page		AX-23	★	★	★	★	★	AX-68	★	★	★	★	★	★
Large shock during lock-up		1						2						
E/G stalls when starting off and stooping		1						2						
No kick-down		1										2	3	4
Poor acceleration	All-ranges							1						
	O/D			1		2								
	Other than O/D				1	2								
	Other than 2nd		1								2			
	1st and 2nd								1					
	1st and "R"						1							
	"R"									1				

V05155

★ Refer to Automatic Transaxle Repair Manual. (Pub. No. RM248E)

Downloaded from www.Manualslib.com manuals search engine

ON–VEHICLE REPAIR

AXOON – 06

VALVE BODY REMOVAL

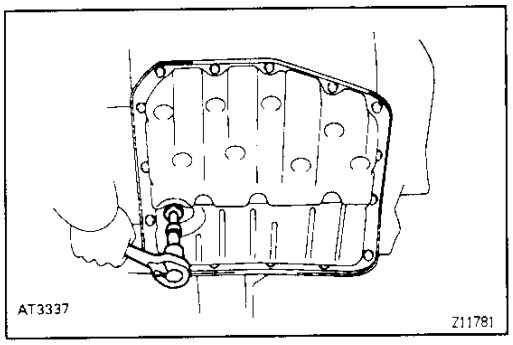

CAUTION: Work must be started 90 seconds from the time the ignition switch is turned to the "LOCK" position and the negative (–) terminal cable is disconnected from the battery.

1. **CLEAN TRANSAXLE EXTERIOR**
   To help prevent contamination, clean the exterior of the transaxle.

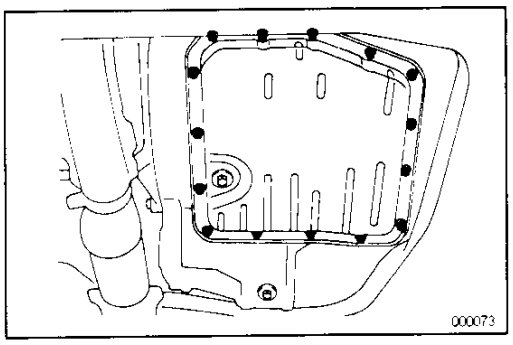

2. **DRAIN ATF**
   Remove the drain plug with 10 mm hexagon wrench, and drain the fluid into a suitable container.
3. **REMOVE OIL PAN AND GASKET**
   NOTICE: Some fluid will remain in the oil pan.
   Remove all pan bolts, and carefully remove the pan assembly discarding the gasket.

AX

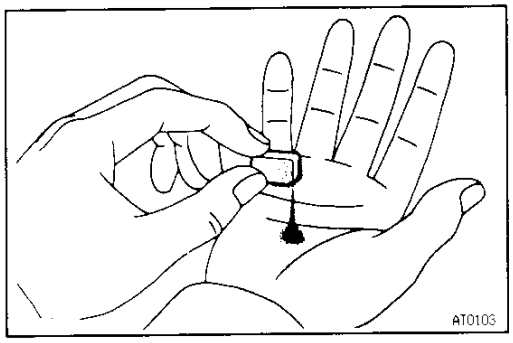

4. **EXAMINE PARTICLES IN PAN**
   Remove the magnets and use them to collect any steel chips. Look carefully at the chips and particles in the pan and on the magnet to anticipate what type of wear you will find in the transaxle.
   - Steel (magnetic): bearing, gear and plate wear
   - Brass (non–magnetic): bushing wear

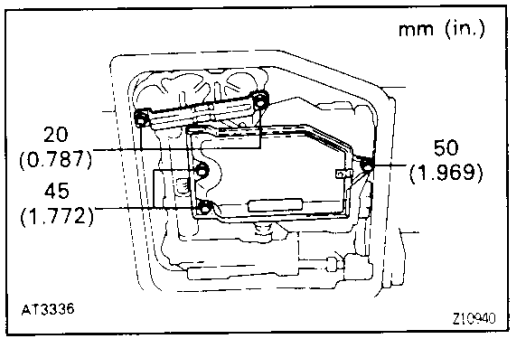

5. **REMOVE OIL STRAINER AND APPLY PIPE BRACKET**
   (a) Remove the 3 bolts and the oil strainer.
   NOTICE: Be careful as oil will come out of the strainer when it is removed.
   (b) Remove the 2 bolts and the apply pipe bracket.

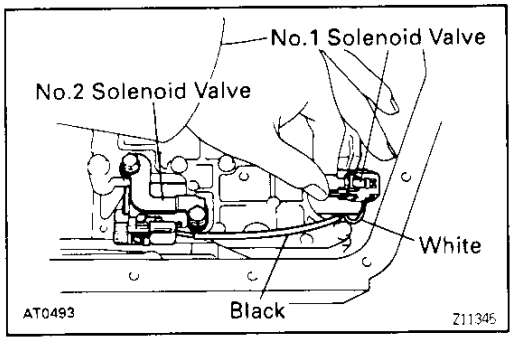

6. **DISCONNECT SOLENOID CONNECTORS**

Downloaded from www.Manualslib.com manuals search engine

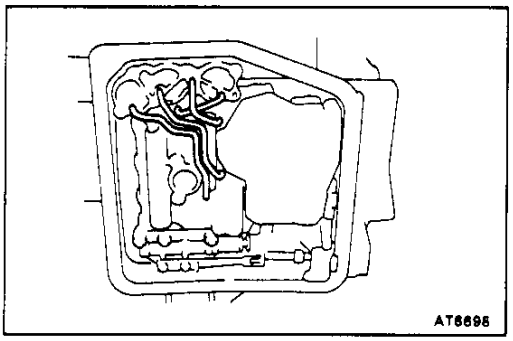

7. REMOVE OIL PIPES

Pry up both the 4 pipe ends with a large screwdriver and remove them.

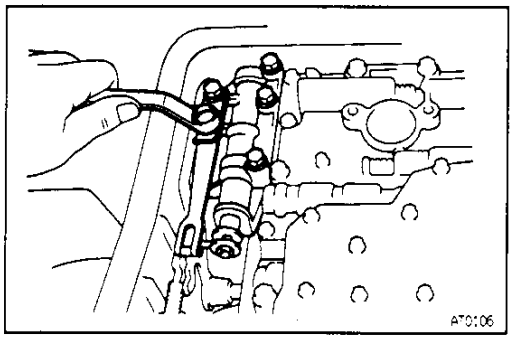

8. REMOVE MANUAL DETENT SPRING

9. REMOVE MANUAL VALVE AND MANUAL VALVE BODY

AX

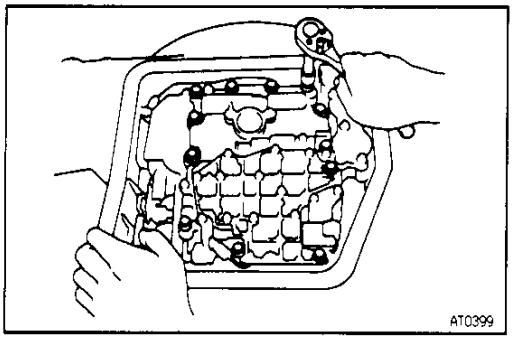

10. REMOVE VALVE BODY

Remove the 12 bolts.

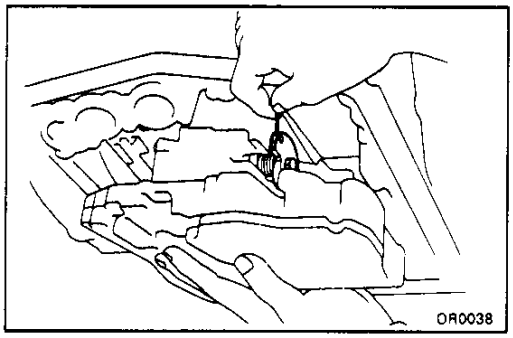

11. REMOVE THROTTLE CABLE

(a) Disconnect the throttle cable.

(b) Remove the valve body.

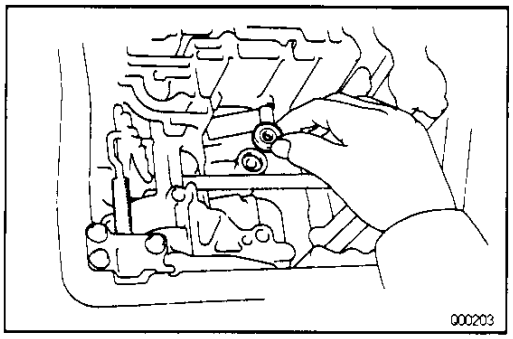

12. REMOVE SECOND BRAKE APPLY GASKET

Downloaded from www.Manualslib.com manuals search engine

AX00P-06

VALVE BODY INSTALLATION

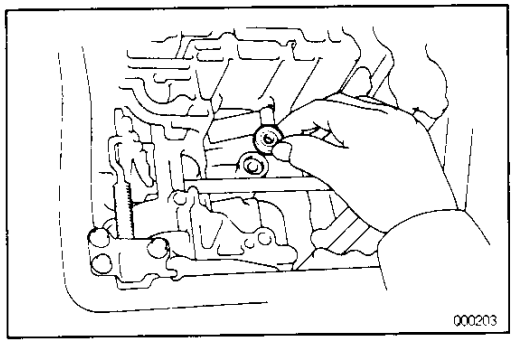

1. INSTALL SECOND BRAKE APPLY NEW GASKET

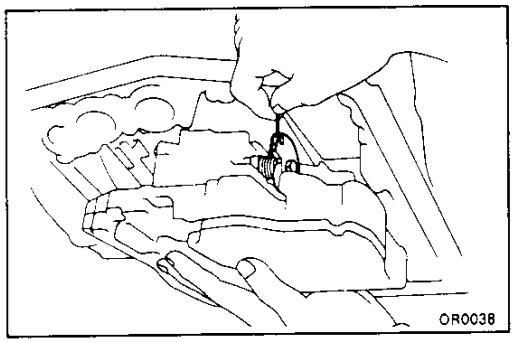

2. INSTALL VALVE BODY

(a) While holding the cam down with your hand, slip the cable into the slot.

(b) Bring valve body into place.

NOTICE: Be careful not to entangle the solenoid wire.

AX

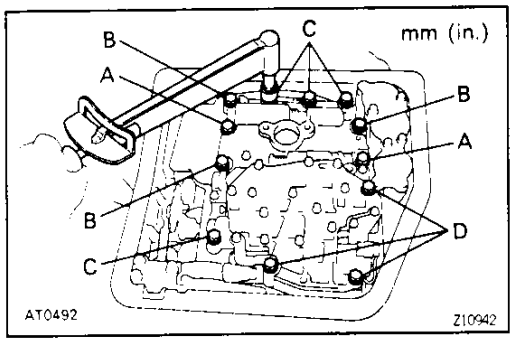

3. INSTALL BOLTS IN VALVE BODY

Hand tighten the 12 bolts first, then torque with a torque wrench.

Torque: 10 N·m (100 kgf·cm, 7 ft·lbf)

Bolt length:

A: 20 mm (0.79 in.)
B: 25 mm (0.98 in.)
C: 36 mm (1.42 in.)
D: 50 mm (1.97 in.)

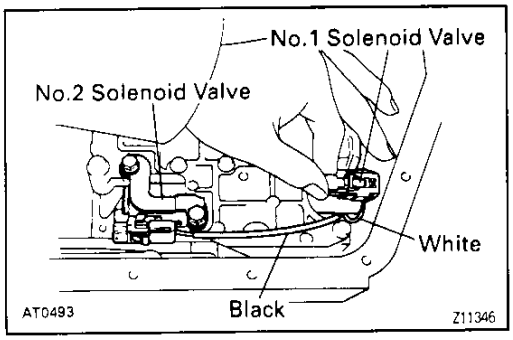

4. CONNECT SOLENOID WIRING

(a) Connect the No.1 solenoid valve connector (white and shorter wire).

(b) Connect the No.2 solenoid valve connector (black and longer wire).

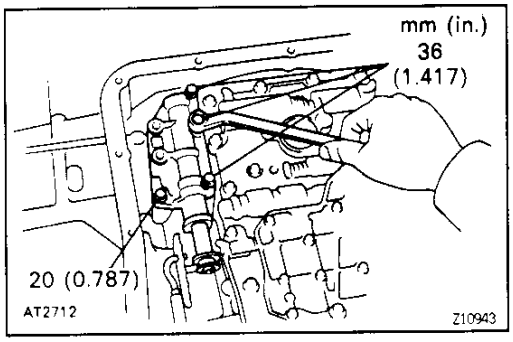

5. INSTALL MANUAL VALVE BODY DETENT SPRING

(a) Align the manual valve with the pin on the manual shaft lever.

(b) Lower the manual valve body into place.

(c) Hand tighten the 4 bolts first. Then, tighten them with a torque wrench.

Torque: 10 N·m (100 kgf·cm, 7 ft·lbf)

Downloaded from www.Manualslib.com manuals search engine

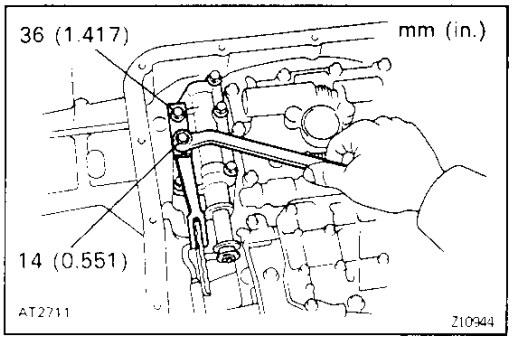

(d) Place the detent spring on the manual valve body and hand tighten the 2 bolts first.
Then, tighten them with a torque wrench.
Torque: 10 N·m (100 kgf·cm, 7 ft·lbf)

(e) Check that the manual valve lever is touching the center of the detent spring tip roller.

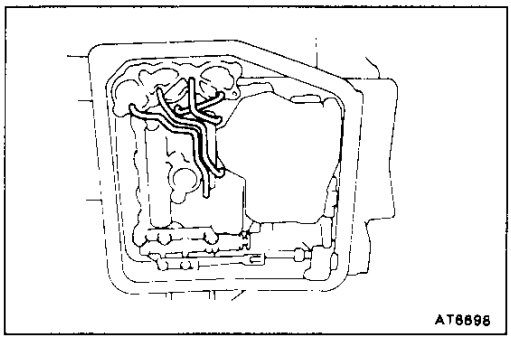

AX

6. INSTALL OIL PIPES

Tap the pipes with a plastic hammer to install them into the positions indicated in the illustration.

NOTICE: Be careful not to bend or damage the pipes.

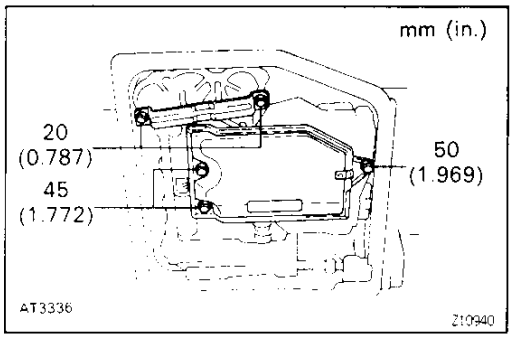

7. INSTALL OIL STRAINER AND APPLY PIPE BRACKET

(a) Install the oil strainer and torque the 3 bolts.

(b) Install the apply pipe bracket and the 2 bolts.
Torque: 10 N·m (100 kgf·cm, 7 ft·lbf)

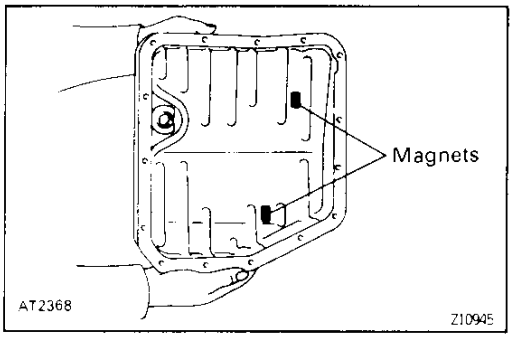

8. INSTALL MAGNETS IN PAN

Install the 2 magnets in the indentations of the pan.

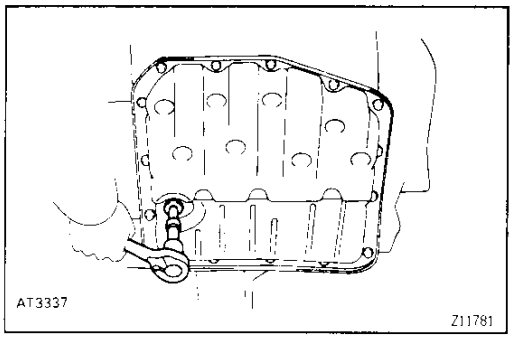

9. INSTALL OIL PAN WITH NEW GASKET

NOTICE: Make sure that the magnet does not interfere with the oil pipes.

Torque: 4.9 N·m (50 kgf·cm, 43 in.·lbf)

10. INSTALL DRAIN PLUG WITH NEW GASKET

Using 10 mm hexagon wrench, install the drain plug with a new gasket and tighten it.

Torque: 49 N·m (500 kgf·cm, 36 ft·lbf)

Downloaded from www.Manualslib.com manuals search engine

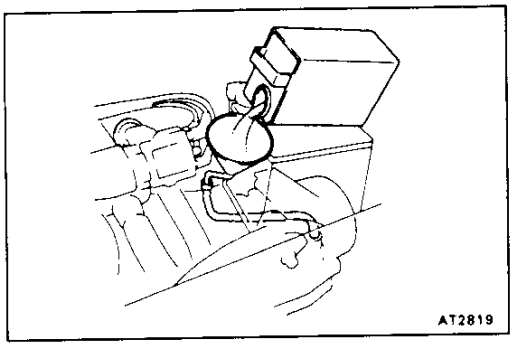

11. FILL TRANSAXLE WITH ATF

Add only about 2 liters of ATF.

NOTICE: Do not overfill.

Fluid type:

ATF DEXRON® II

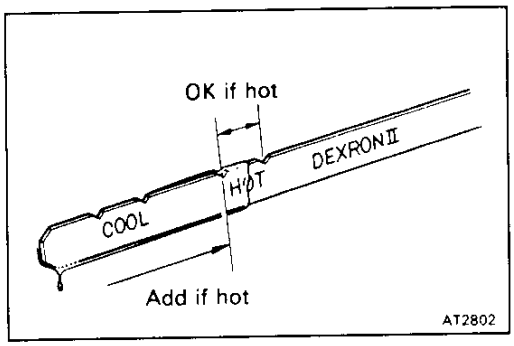

12. CHECK FLUID LEVEL

(See page AX–14)

AX

AX00Q–04

THROTTLE CABLE REMOVAL

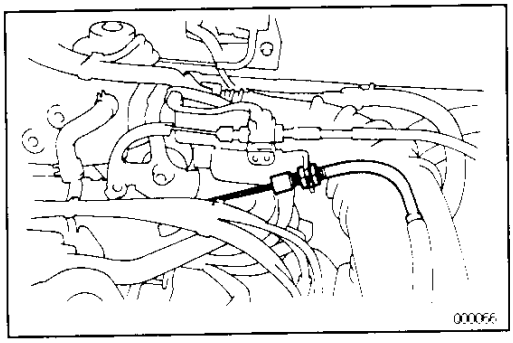

1. DISCONNECT THROTTLE CABLE

(a) Disconnect the cable housing from the bracket.

(b) Disconnect the cable from the throttle linkage.

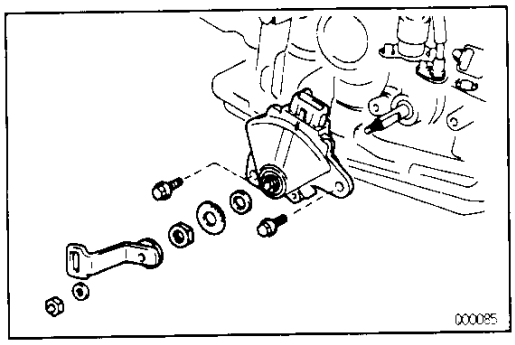

2. REMOVE NEUTRAL START SWITCH

(a) Remove the clips and disconnect the transaxle control cable from manual shift lever.

(b) Remove the manual shift lever.

(c) Remove the neutral start switch.

3. REMOVE VALVE BODY

(See page AX–47)

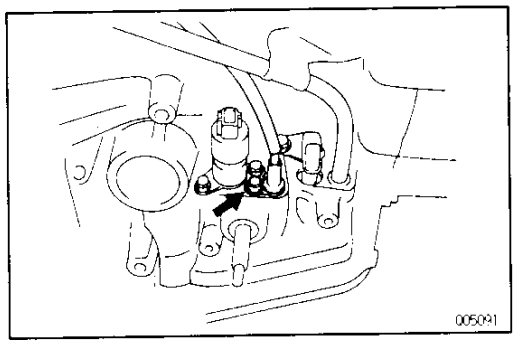

4. PULL THROTTLE CABLE OUT OF TRANSAXLE CASE

(a) Remove the bolt and retaining plate.

(b) Pull the cable out of the transaxle case.

Downloaded from www.Manualslib.com manuals search engine

AX0GR–06

THROTTLE CABLE INSTALLATION

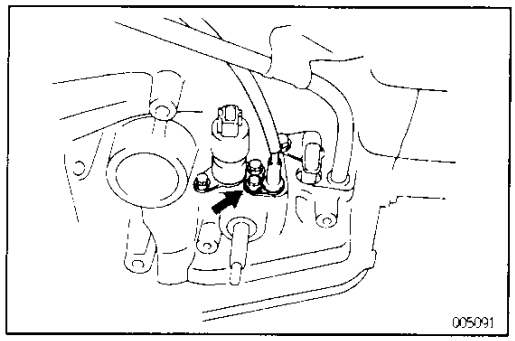

1. INSTALL CABLE IN TRANSAXLE CASE

(a) Be sure to push it in all the way.

(b) Install the retaining plate and the bolt.

2. INSTALL VALVE BODY

(See page AX–49)

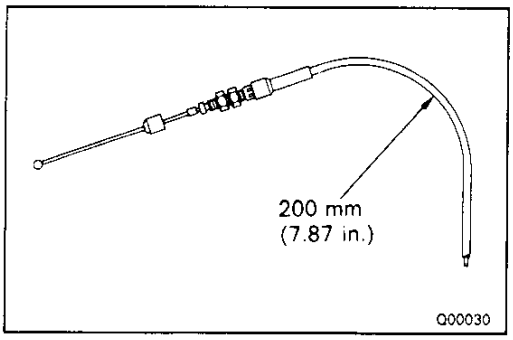

3. IF THROTTLE CABLE IS NEW, STAKE STOPPER ON INNER CABLE

(a) Bend the cable so there is a radius of about 200 mm (7.87 in.).

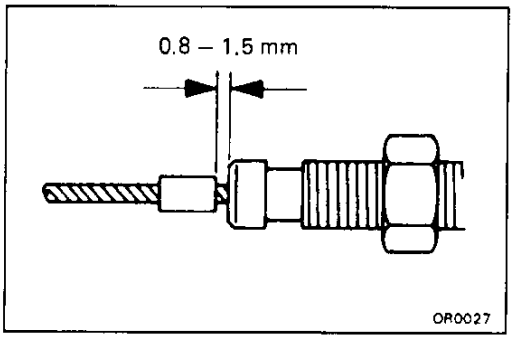

(b) Pull the inner cable lightly until a slight resistance is felt, and hold it.

(c) Stake the stopper 0.8–1.5 mm (0.031–0.059 in.) from the end of outer cable, as shown.

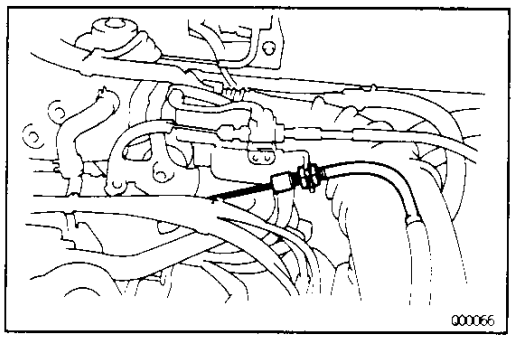

4. CONNECT THROTTLE CABLE

(a) Connect the cable to the throttle linkage.

(b) Connect the cable housing to the bracket.

5. ADJUST THROTTLE CABLE

(See page AX–15)

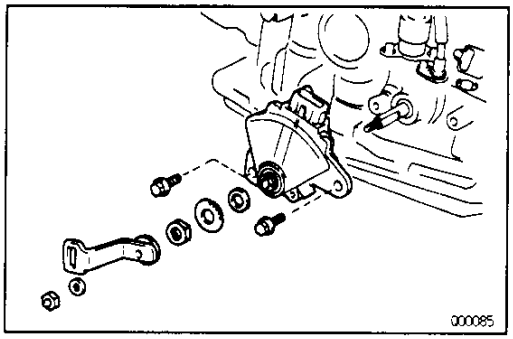

6. INSTALL NEUTRAL START SWITCH

(a) Install the neutral start switch.

(b) Install the manual shift lever.

(c) Adjust the neutral start switch.
(See page AX–15)

(d) Connect the transaxle control cable.

Downloaded from www.Manualslib.com manuals search engine

AX00V-01

DIFFERENTIAL OIL SEAL REMOVAL

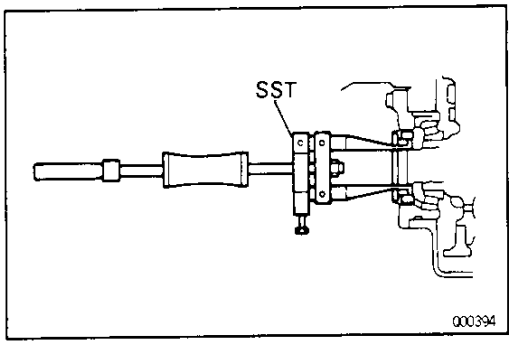

1. **REMOVE BOTH DRIVE SHAFTS**
   (See page SA–61)
2. **REMOVE BOTH SIDE GEAR SHAFT OIL SEALS**
   Using SST, pull out the oil seal.
   SST 09308–00010

AX00W-04

DIFFERENTIAL OIL SEAL INSTALLATION

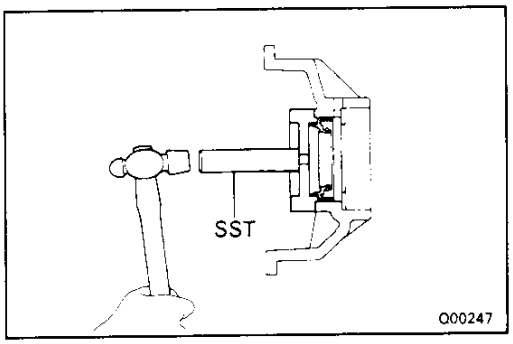

1. **INSTALL LEFT SIDE GEAR SHAFT OIL SEAL**
   (1) Using SST and a hammer, drive in a new oil seal.
   SST 09350–32014 (09351–32130, 09351–32150)
   Oil seal depth:
   2.7 ± 0.5 mm (0.11 ± 0.02 in.)
   (2) Coat the lip of oil seal with MP grease.

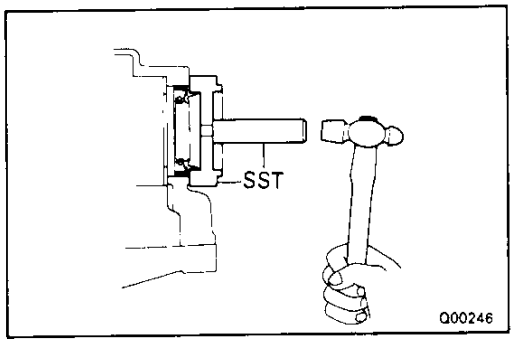

2. **INSTALL RIGHT SIDE GEAR SHAFT OIL SEAL**
   (1) Using SST and a hammer, drive in a new oil seal.
   SST 09350–32014 (09351–32130, 09351–32150)
   Oil seal depth:
   0 ± 0.5 mm (0 ± 0.02 in.)
   (2) Coat the oil seal lip with MP grease.
3. **INSTALL BOTH DRIVE SHAFTS**
   (See page SA–70)
4. **CHECK FLUID LEVEL**
   (See page AX–14)

AX

Downloaded from www.Manualslib.com manuals search engine

ASSEMBLY REMOVAL AND INSTALLATION

ASSEMBLY COMPONENTS

AX00X – 06

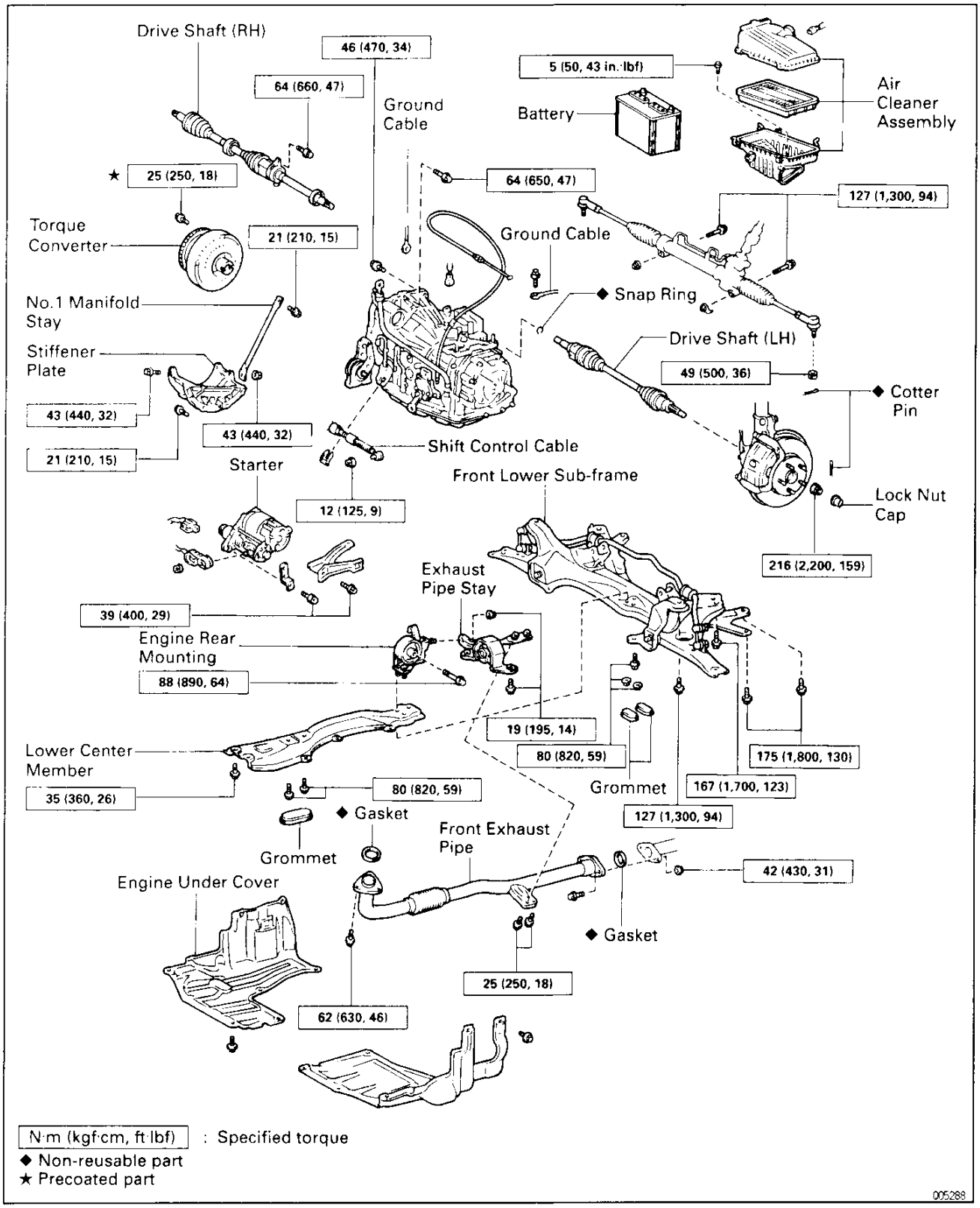

AX

Downloaded from www.Manualslib.com manuals search engine

AX0TB-01

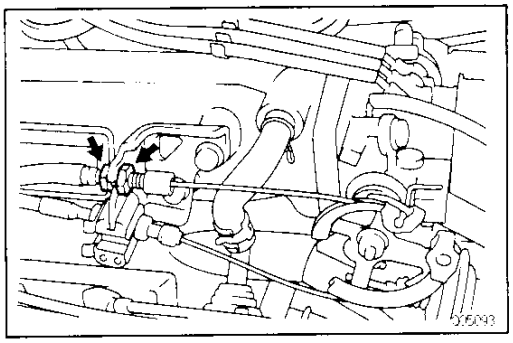

TRANSAXLE REMOVAL

CAUTION: Work must be started 90 seconds from the time the ignition switch is turned to the "LOCK" position and the negative (−) terminal cable is disconnected from the battery.

1. **REMOVE BATTERY**
2. **DISCONNECT THROTTLE CABLE**

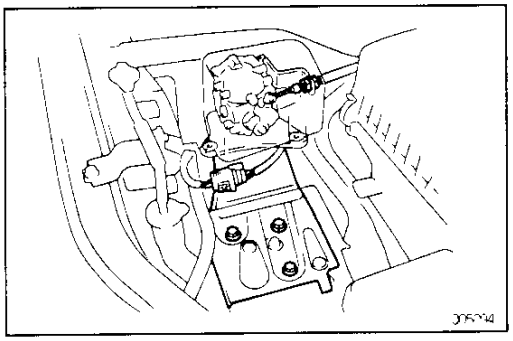

w/ Cruise Control System:

3. **REMOVE CRUISE CONTROL ACTUATOR**

(a) Remove the cruise control actuator cover.

(b) Disconnect the connector from the cruise control actuator.

(c) Remove the 3 bolts and the cruise control actuator.

AX

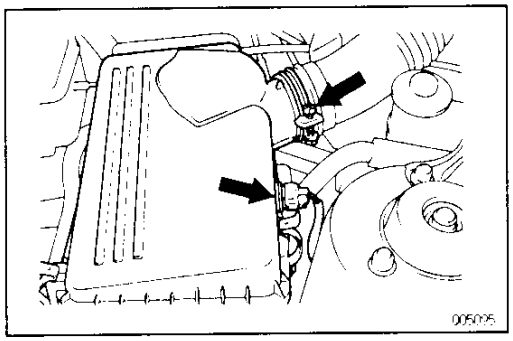

4. **REMOVE AIR CLEANER ASSEMBLY**

(a) Disconnect the connector.

(b) Remove the air cleaner assembly.

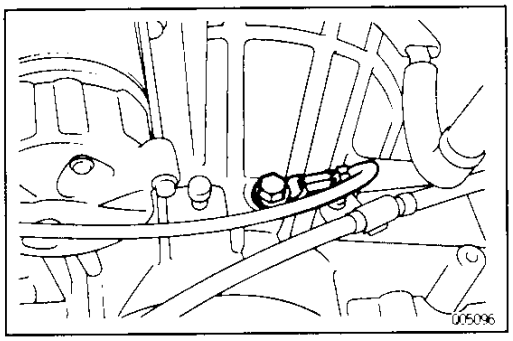

5. **REMOVE GROUND CABLE MOUNTING BOLT**

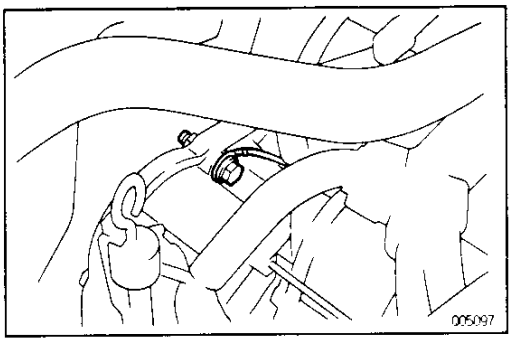

Downloaded from www.Manualslib.com manuals search engine

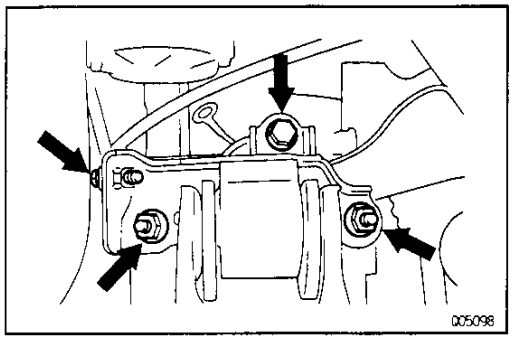

6. REMOVE ENGINE LEFT MOUNTING UPPER SIDE BOLT

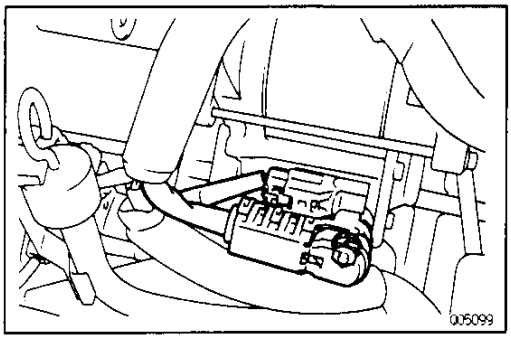

7. REMOVE STARTER

(a) Remove the nut and disconnect the connector and the terminal.

AX

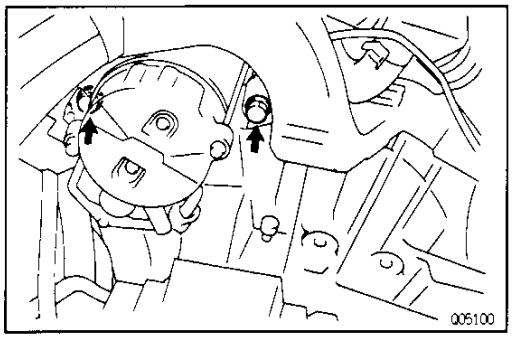

(b) Remove the 2 bolts and the starter.

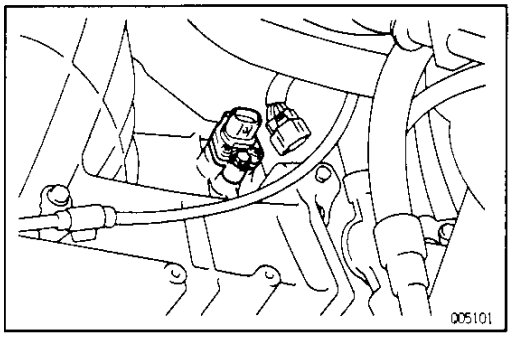

8. DISCONNECT VEHICLE SPEED SENSOR CONNECTOR

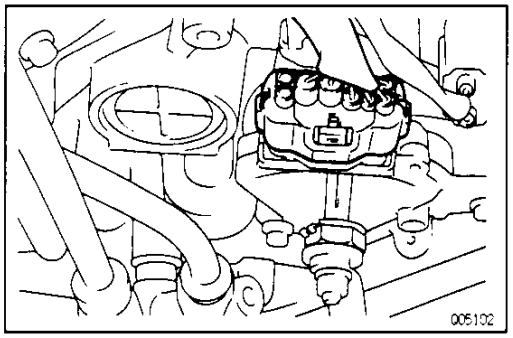

9. DISCONNECT NEUTRAL START SWITCH CONNECTOR

Downloaded from www.Manualslib.com manuals search engine

AX0T8 01

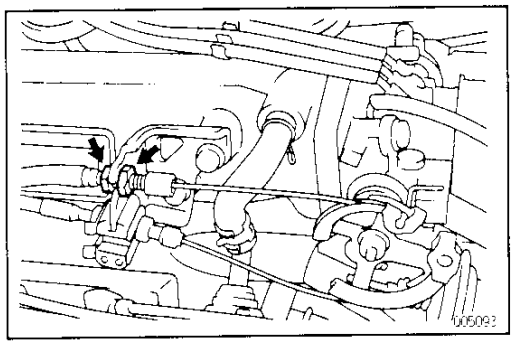

TRANSAXLE REMOVAL

CAUTION: Work must be started 90 seconds from the time the ignition switch is turned to the "LOCK" position and the negative (−) terminal cable is disconnected from the battery.

1. **REMOVE BATTERY**
2. **DISCONNECT THROTTLE CABLE**

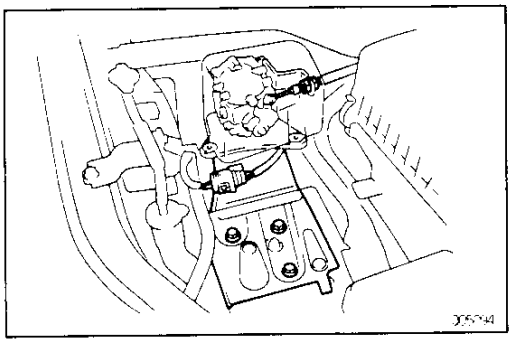

w/ Cruise Control System:

3. **REMOVE CRUISE CONTROL ACTUATOR**

(a) Remove the cruise control actuator cover.

(b) Disconnect the connector from the cruise control actuator.

(c) Remove the 3 bolts and the cruise control actuator.

AX

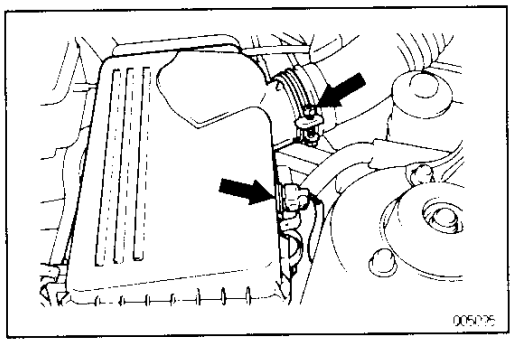

4. **REMOVE AIR CLEANER ASSEMBLY**

(a) Disconnect the connector.

(b) Remove the air cleaner assembly.

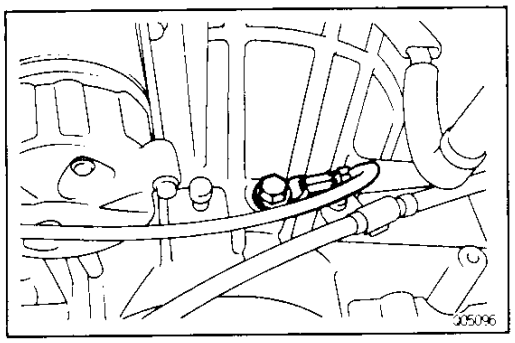

5. **REMOVE GROUND CABLE MOUNTING BOLT**

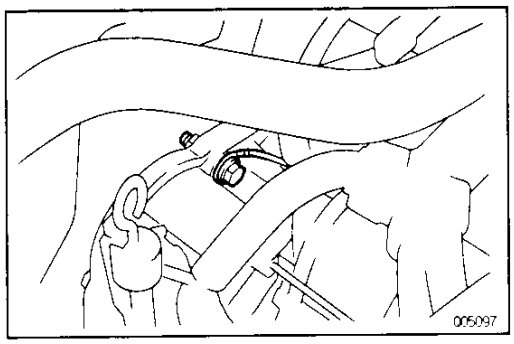

Downloaded from www.Manualslib.com manuals search engine

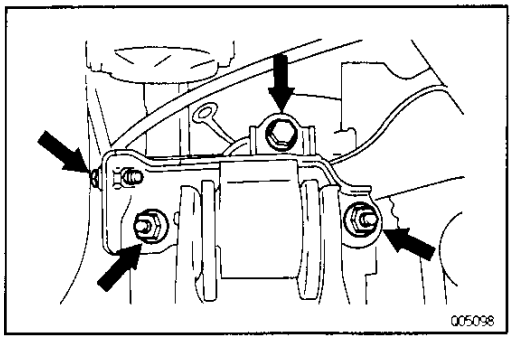

6. REMOVE ENGINE LEFT MOUNTING UPPER SIDE BOLT

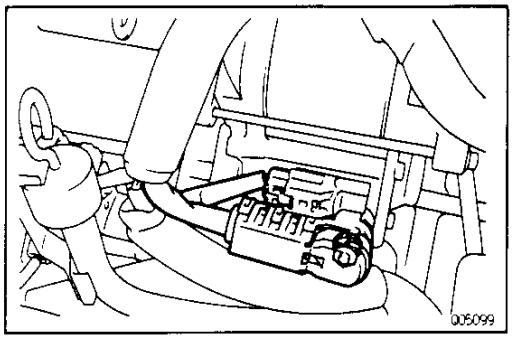

7. REMOVE STARTER

(a) Remove the nut and disconnect the connector and the terminal.

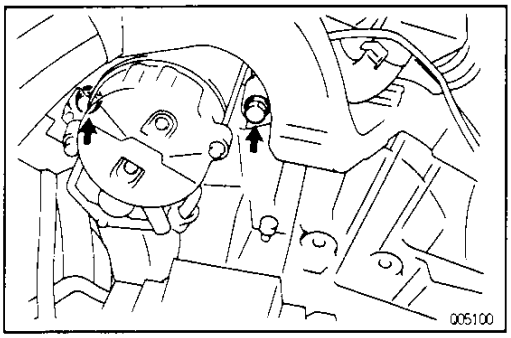

(b) Remove the 2 bolts and the starter.

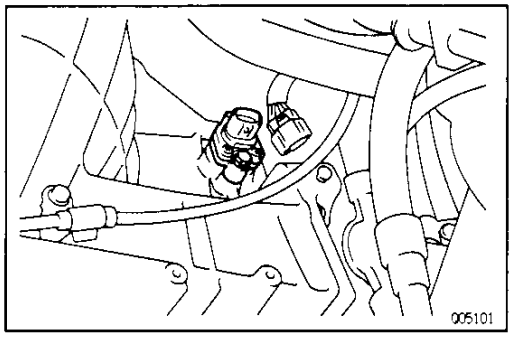

8. DISCONNECT VEHICLE SPEED SENSOR CONNECTOR

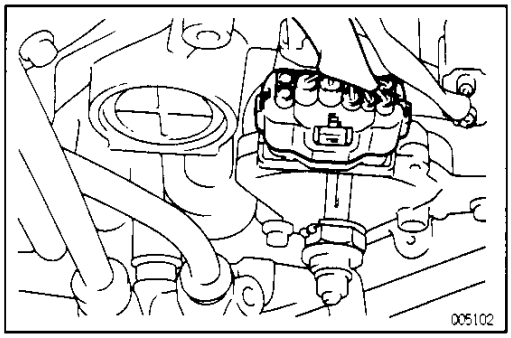

9. DISCONNECT NEUTRAL START SWITCH CONNECTOR

Downloaded from www.Manualslib.com manuals search engine

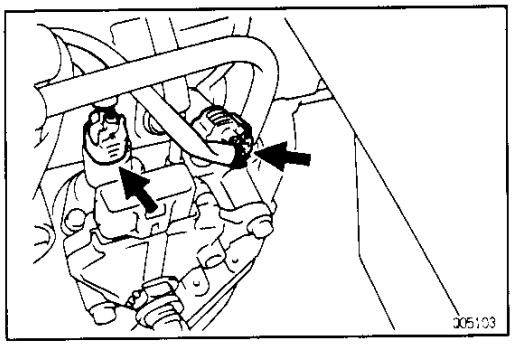

10. DISCONNECT 2 SOLENOID CONNECTORS

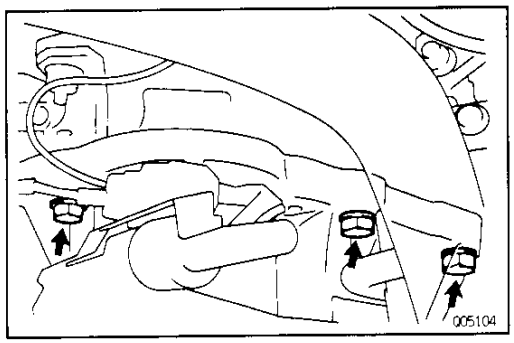

11. REMOVE 3 TRANSAXLE MOUNTING BOLTS

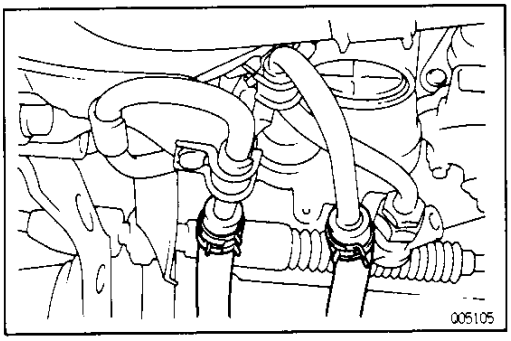

12. DISCONNECT PS OIL COOLER HOSES

Loosen the 2 clips and disconnect the 2 oil cooler hoses.

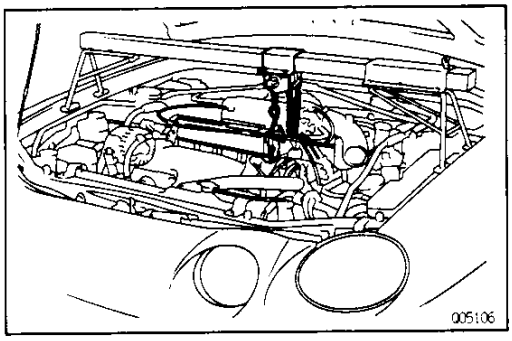

13. INSTALL ENGINE SUPPORT FIXTURE

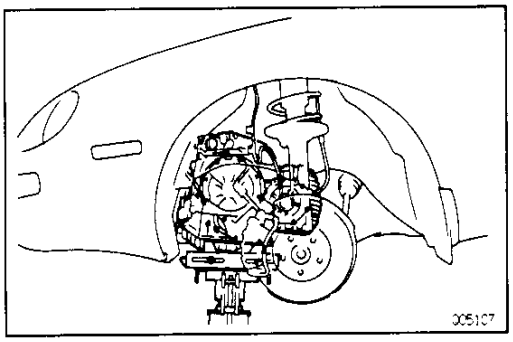

14. RAISE UP VEHICLE
15. REMOVE ENGINE UNDER COVERS
16. DRAIN ATF
17. REMOVE LEFT AND RIGHT DRIVE SHAFTS
(See page SA–61)
18. JACK UP TRANSAXLE

Downloaded from www.Manualslib.com manuals search engine

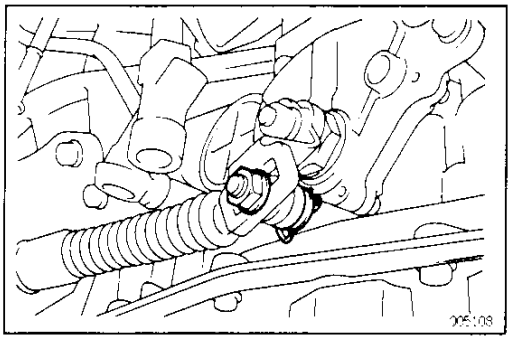

19. DISCONNECT SHIFT CONTROL CABLE

(a) Remove the nut from the control shaft lever.

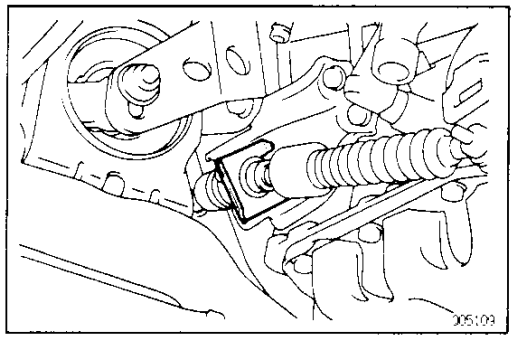

(b) Remove the clip and disconnect the shift control cable.

AX

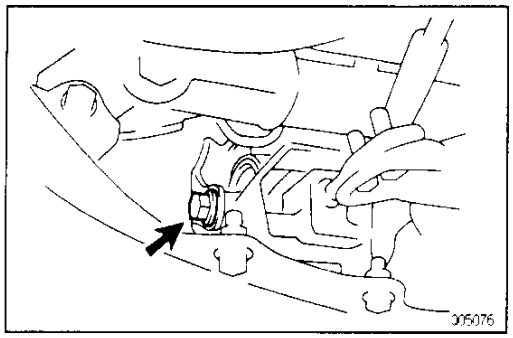

20. REMOVE ENGINE REAR MOUNTING BOLT

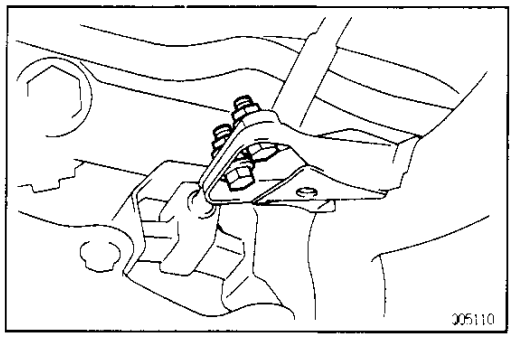

21. REMOVE FRONT EXHAUST PIPE

(a) Remove the 2 bolts.

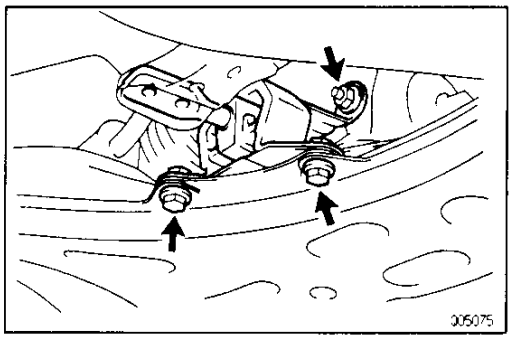

(b) Remove the 2 bolts, the nut and the exhaust pipe stay from the suspension member.

Downloaded from www.Manualslib.com manuals search engine

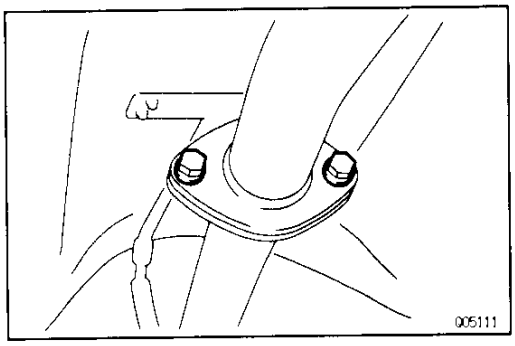

(c) Remove the 2 bolts and the nuts.
(d) Disconnect the front exhaust pipe and remove the gasket.

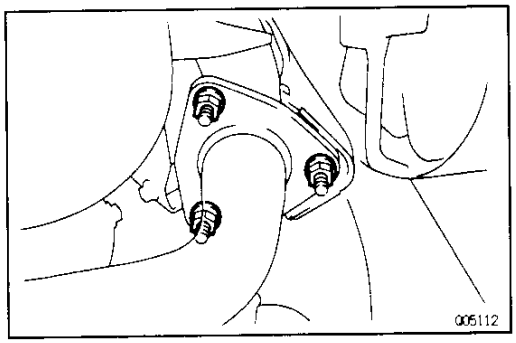

(e) Remove the 3 nuts, the front exhaust pipe and the gasket.

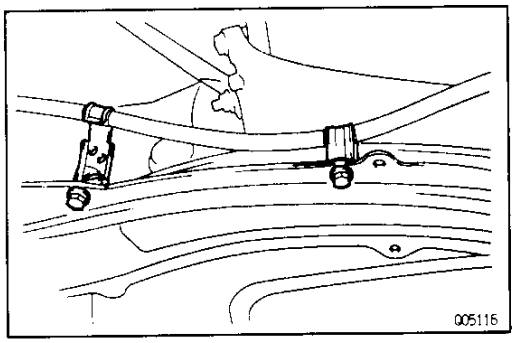

22. REMOVE SUSPENSION MEMBERS

(a) Remove the 2 shift cable mounting bolts.

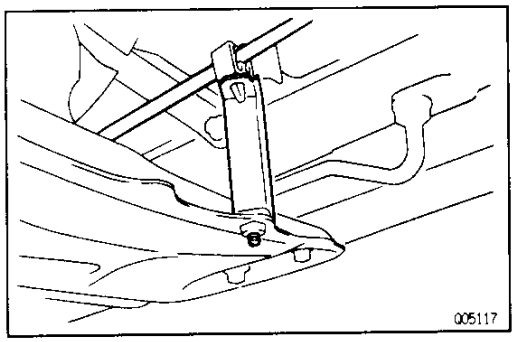

(b) Disconnect the air conditioner pipe bracket.

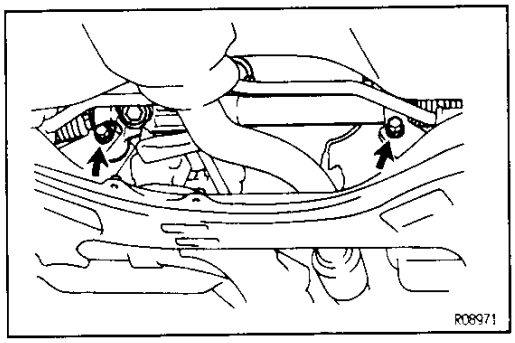

(c) Remove the 2 power steering gear assembly set bolts and nuts.

Downloaded from www.Manualslib.com manuals search engine

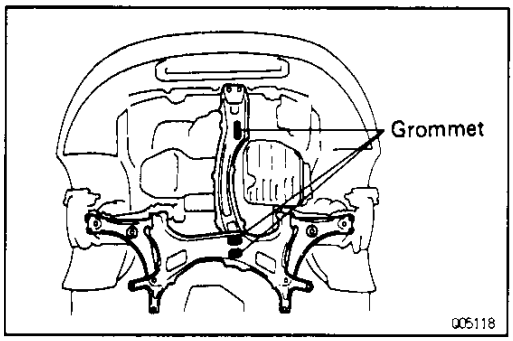

(d) Remove the 3 grommets.

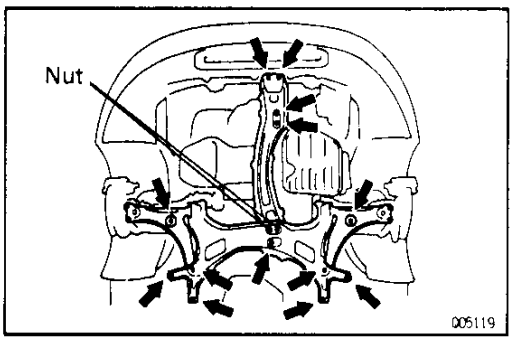

(e) Remove the 13 bolts and the 2 nuts.

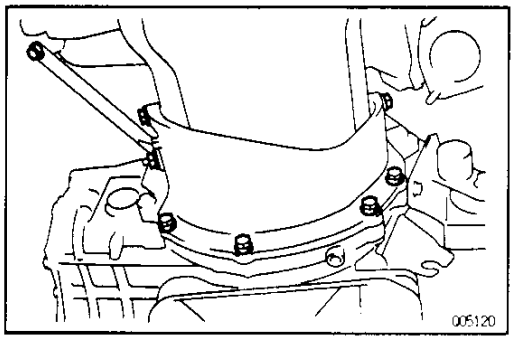

23. REMOVE STIFFENER PLATE

(a) Remove the nut, the bolt and the No.1 manifold stay.

(b) Remove the 6 bolts and the stiffener plate.

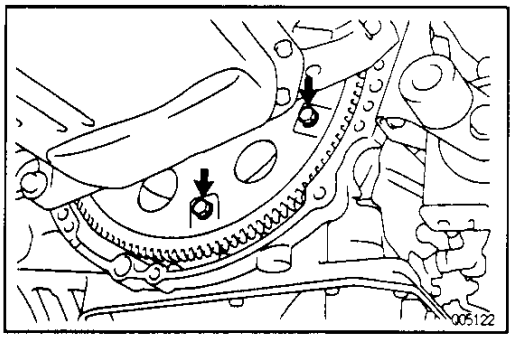

24. REMOVE TRANSAXLE

(a) Turn the crankshaft to gain access to the bolts. Remove the 6 bolts.

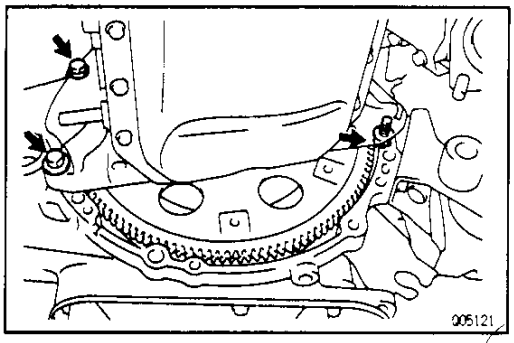

(b) Remove the 3 bolts and the transaxle.

(c) Remove the bolts and the transaxle.

Downloaded from www.Manualslib.com manuals search engine

AX0TG-01

TRANSAXLE INSTALLATION

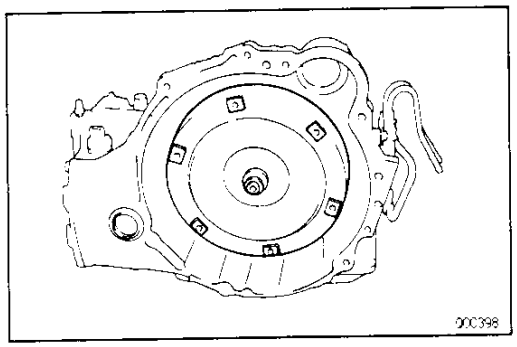

1. INSTALL TORQUE CONVERTER CLUTCH IN TRANSAXLE

If the torque converter clutch has been drained and washed, refill with new ATF.

Fluid type:

ATF DEXRON® II

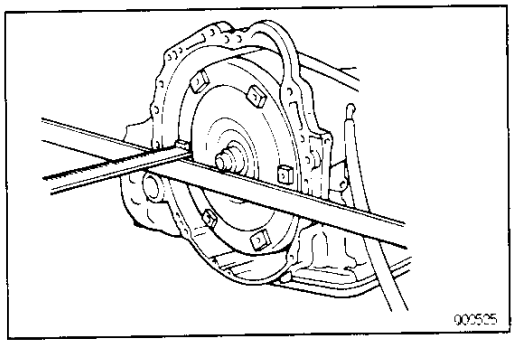

2. CHECK TORQUE CONVERTER CLUTCH INSTALLATION

Using calipers and a straight edge, measure from the installed surface to the front surface of the transaxle housing.

Correct distance:

More than 22.8 mm (0.898 in.)

AX

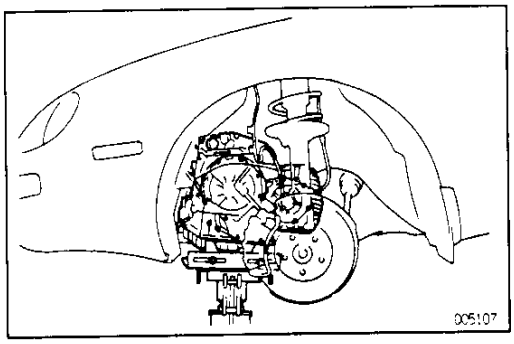

3. JACK UP TRANSAXLE

4. INSTALL TRANSAXLE

(a) Align the 3 knock pins on the block with the converter housing.

(b) Temporarily install the bolt.

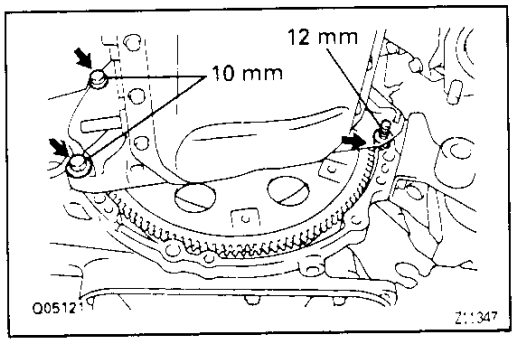

(c) Install the transaxle with the 3 bolts.

Torque:

12 mm head bolt: 64 N·m (650 kgf·cm, 47 ft·lbf)

10 mm head bolt: 46 N·m (470 kgf·cm, 34 ft·lbf)

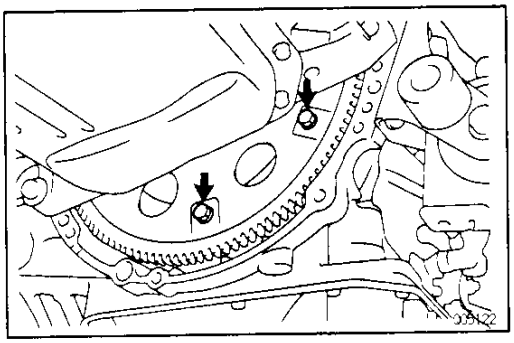

5. INSTALL TORQUE CONVERTER CLUTCH MOUNTING BOLTS

(a) Clean the threads of bolts with the gasoline.

(b) Coat the threads of the bolts with the sealer.

Sealant

Part No.08833–00070, THREE BOND 1324 or equivalent

(c) Install the 6 bolts while turning the crankshaft to gain access.

Downloaded from www.Manualslib.com manuals search engine

(d) Tighten the bolts evenly.
Torque: 25 N·m (250 kgf·cm, 18 ft·lbf)

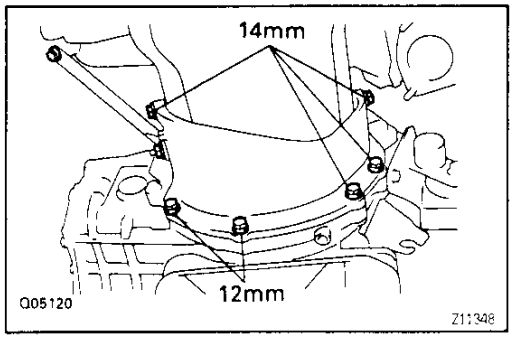

AX

6. INSTALL STIFFENER PLATE

(a) Install the stiffener plate with the 6 bolts.
Alternately tighten the bolts in several passes.
Torque:
12 mm head bolt: 21 N·m (210 kgf·cm, 15 ft·lbf)
14 mm head bolt: 43 N·m (440 kgf·cm, 32 ft·lbf)

(b) Install the manifold stay with the nut and the bolt.
Torque:
Bolt: 21 N·m (210 kgf·cm, 15 ft·lbf)
Nut:43 N·m (440 kgf·cm, 32 ft·lbf)

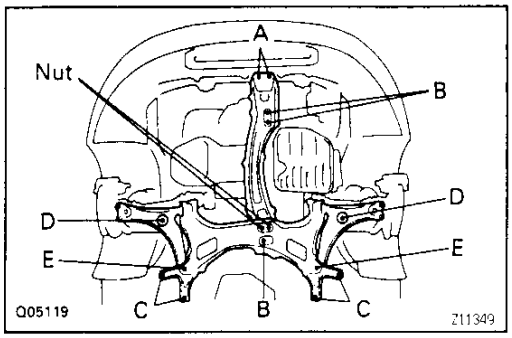

7. INSTALL SUSPENSION MEMBERS

(a) Temporarily install the 13 bolts and the 2 nuts.

(b) Torque the bolts and nuts.
Torque:
A bolt: 35 N·m (360 kgf·cm, 26 ft·lbf)
B bolt: 80 N·m (820 kgf·cm, 59 ft·lbf)
C bolt: 175 N·m (1,800 kgf·cm, 130 ft·lbf)
D bolt: 127 N·m (1,300 kgf·cm, 94 ft·lbf)
E bolt: 167 N·m (1,700 kgf·cm, 123 ft·lbf)
Nut: 80 N·m (820 kgf·cm, 59 ft·lbf)

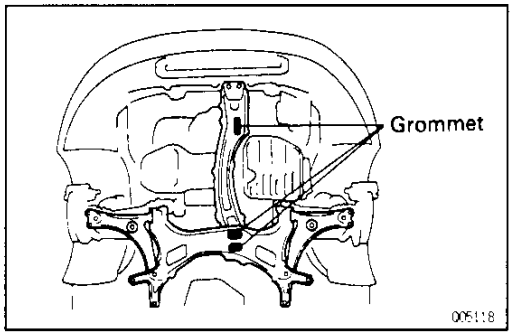

(c) Install the 3 grommets.

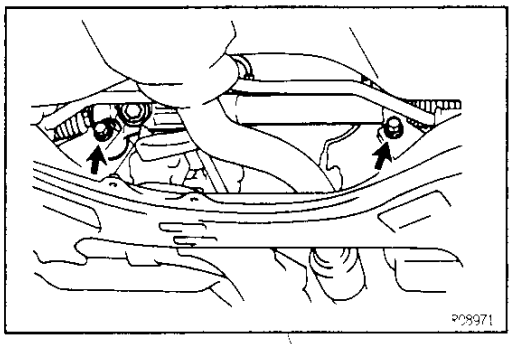

(d) Install the power steering gear assembly with 2 bolts.
Torque: 127 N·m (1,300 kgf·cm, 94 ft·lbf)

Downloaded from www.Manualslib.com manuals search engine

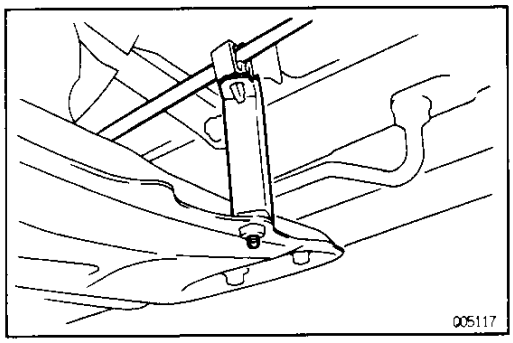

(e) Connect the air conditioner pipe bracket.

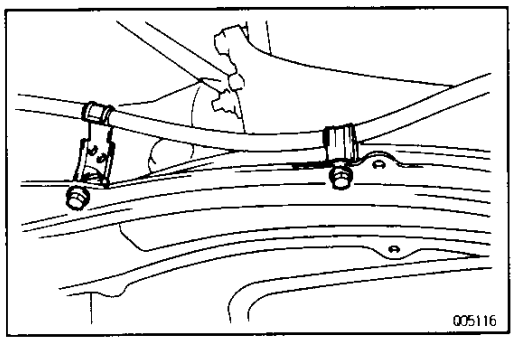

(f) Install the 2 shift cable mounting bolts.

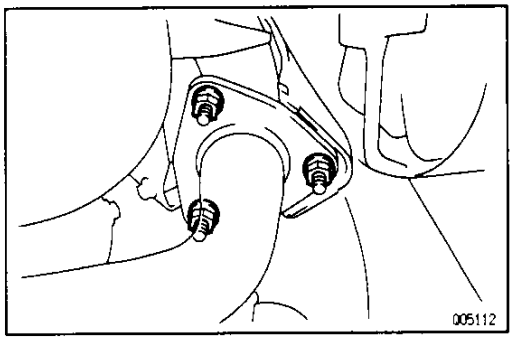

8. INSTALL FRONT EXHAUST PIPE

(a) Install a new gasket.

(b) Install the front exhaust pipe with the 3 nuts.
Torque: 62 N·m (630 kgf·cm, 46 ft·lbf)

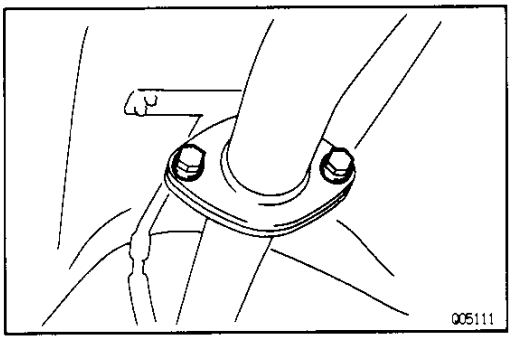

(c) Install a new gasket.

(d) Install the 2 bolts and nuts.
Torque: 42 N·m (430 kgf·cm, 31 ft·lbf)

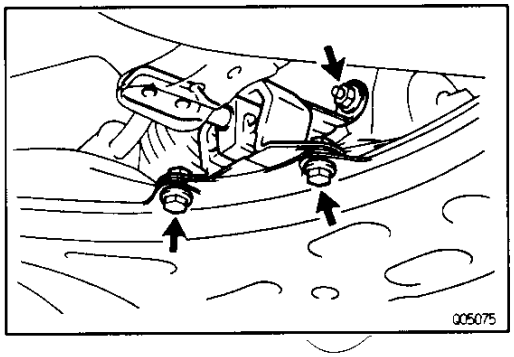

(e) Install the exhaust pipe stay with the 2 bolts and nut.
Torque: 19 N·m (195 kgf·cm, 14 ft·lbf)

Downloaded from www.Manualslib.com manuals search engine

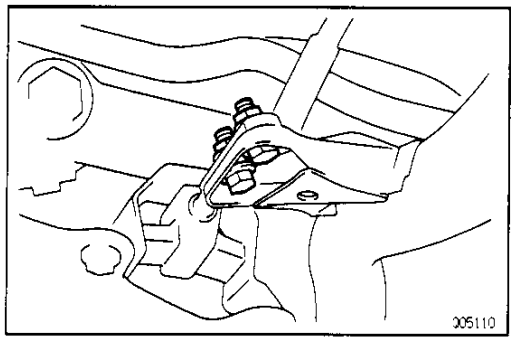

(f) Install the 2 bolts.
Torque: 25 N·m (250 kgf·cm, 18 ft·lbf)

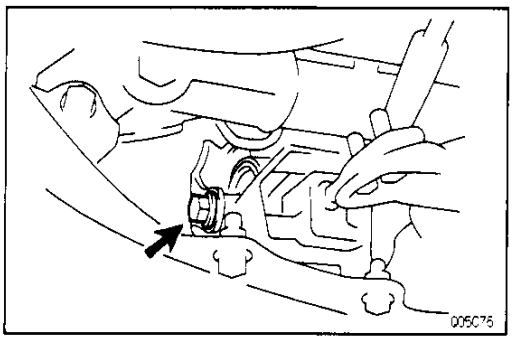

9. INSTALL ENGINE REAR MOUNTING BOLT
Torque: 88 N·m (890 kgf·cm, 64 ft·lbf)

AX

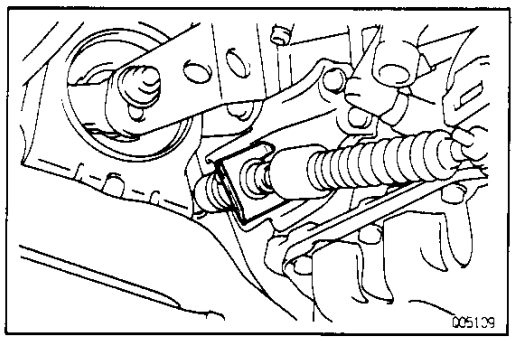

10. CONNECT SHIFT CONTROL CABLE
(a) Connect the control cable with the clip.

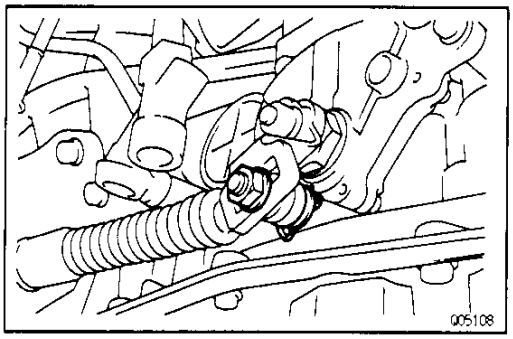

(b) Install the nut.

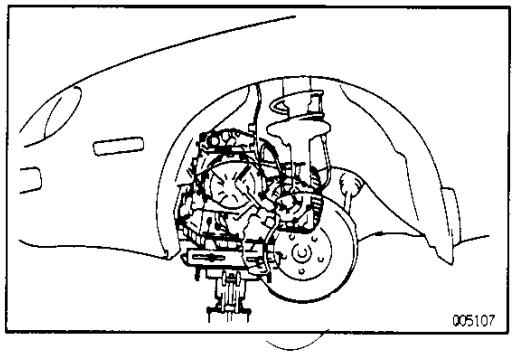

11. INSTALL LEFT AND RIGHT DRIVE SHAFTS
(See page SA–70)
12. INSTALL ENGINE UNDER COVERS
13. REMOVE JACK AND LOWER VEHICLE

Downloaded from www.Manualslib.com manuals search engine

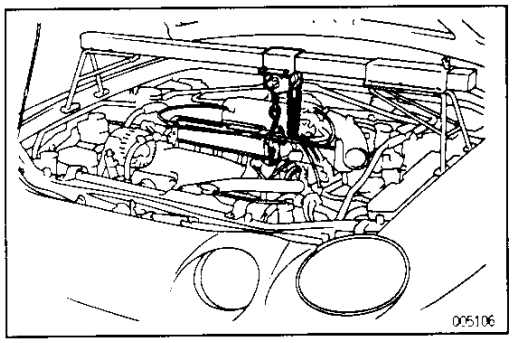

14. REMOVE ENGINE SUPPORT FIXTURE

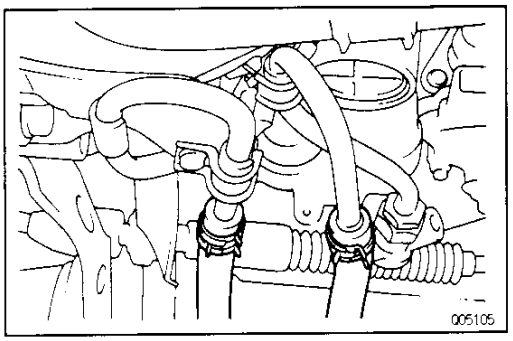

15. CONNECT OIL COOLER HOSES

Connect the oil cooler hoses with the 2 clips.

AX

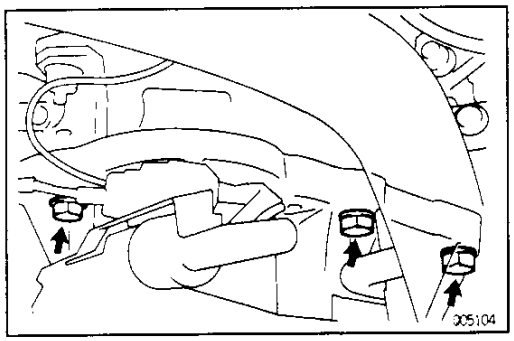

16. INSTALL 3 TRANSAXLE MOUNTING BOLTS

Torque: 64 N·m (650 kgf·cm, 47 ft·lbf)

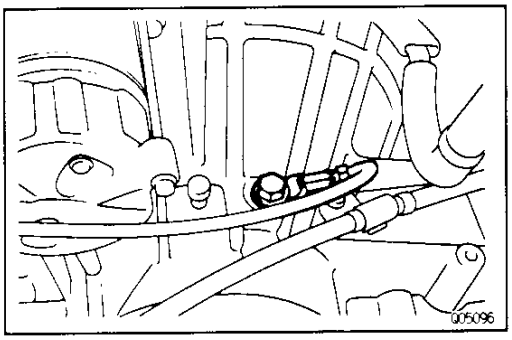

17. INSTALL GROUND CABLE MOUNTING BOLT

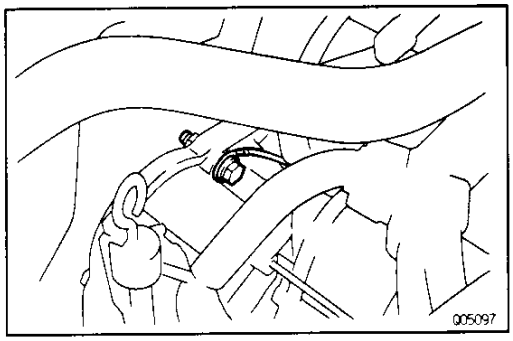

Torque: 64 N·m (650 kgf·cm, 47 ft·lbf)

Downloaded from www.Manualslib.com manuals search engine

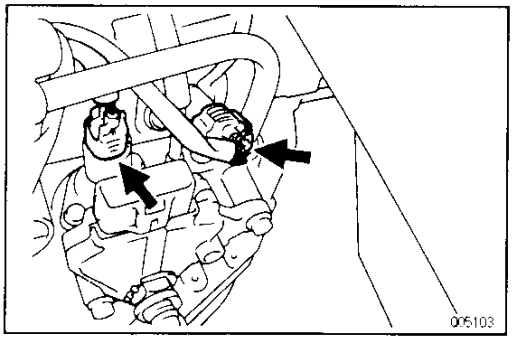

18. CONNECT 2 SOLENOID CONNECTORS

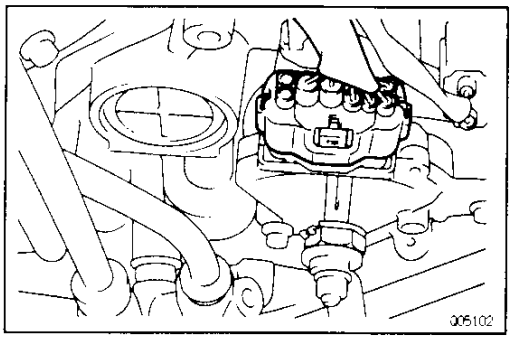

19. CONNECT NEUTRAL START SWITCH CONNECTOR

AX

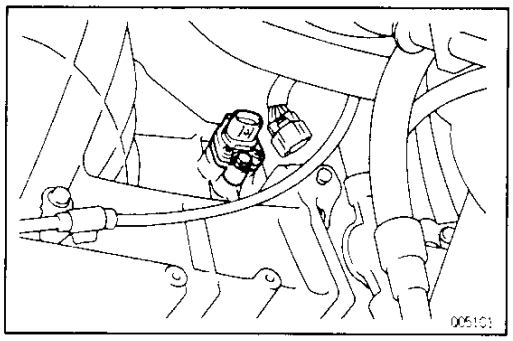

20. CONNECT VEHICLE SPEED SENSOR CONNECTOR

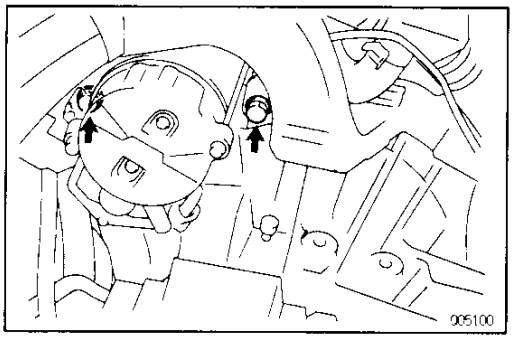

21. INSTALL STARTER

(a) Install the starter with the 2 bolts.
Torque: 39 N·m (400 kgf·cm, 29 ft·lbf)

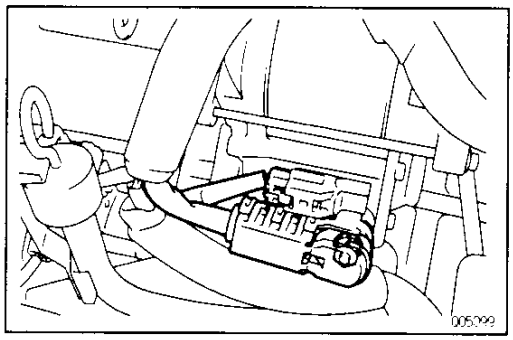

(b) Connect the connector.
(c) Connect the terminal with the nut.

Downloaded from www.Manualslib.com manuals search engine

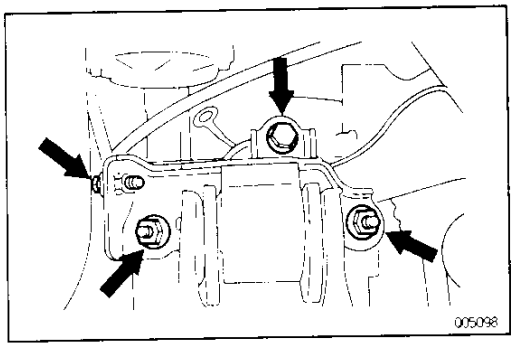

22. INSTALL ENGINE LEFT MOUNTING UPPER SIDE BOLT

Torque: 64 N·m (650 kgf·cm, 47 ft·lbf)

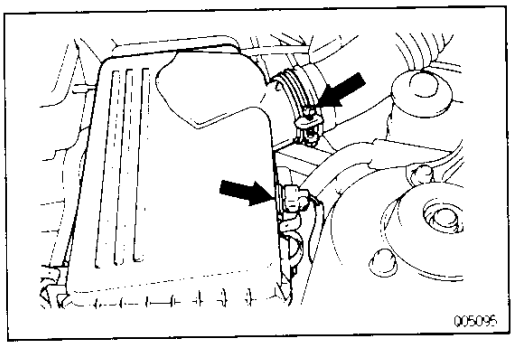

23. INSTALL AIR CLEANER ASSEMBLY

(a) Install the air cleaner assembly.

(b) Connect the connector.

AX

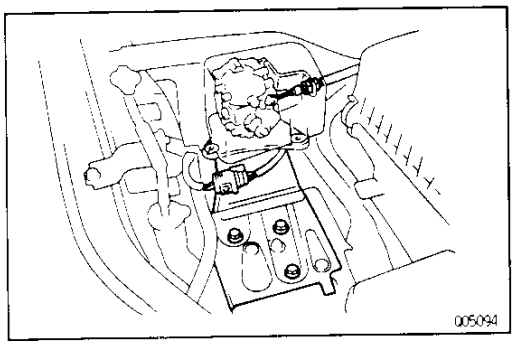

24. INSTALL CRUISE CONTROL ACTUATOR

(a) Install the cruise control actuator with the 3 bolts.

(b) Connect connector from cruise control actuator.

(c) Install cruise control actuator cover.

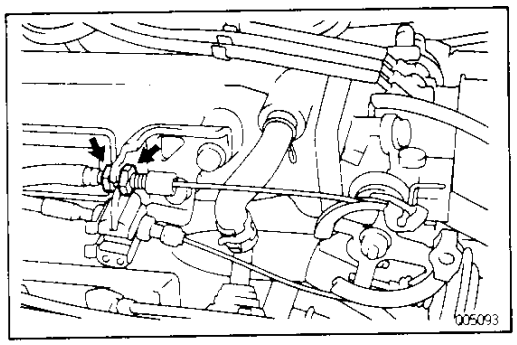

25. INSTALL BATTERY

26. INSTALL AND ADJUST THROTTLE CABLE

(See page AX–15)

27. ADJUST SHIFT CONTROL CABLE

(See page AX–15)

28. ADJUST NEUTRAL START SWITCH

(See page AX–15)

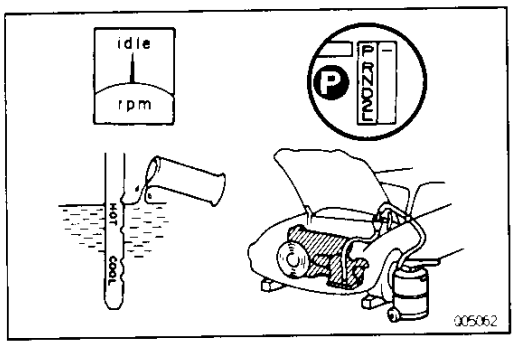

29. FILL ATF

Fluid type:

ATF DEXRON® II

Dry fill:

5.6 liters (5.9 US qts, 4.9 Imp.qts)

Downloaded from www.Manualslib.com manuals search engine

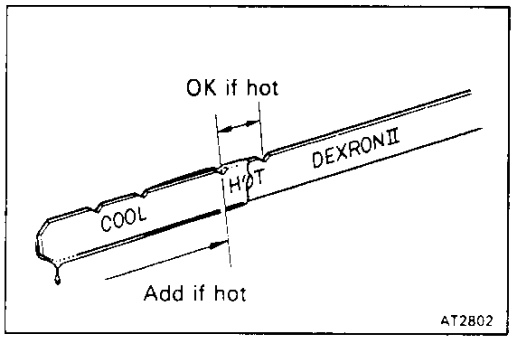

30. CHECK FLUID LEVEL
(See page AX–14)

31. INSPECT FRONT WHEEL ALIGNMENT
(See page SA–7)

32. PERFORM ROAD TEST

TORQUE CONVERTER CLEANING

AX0R2-02

If the transaxle is contaminated, the torque converter and transmission cooler should be thoroughly flushed with ATF.

AX

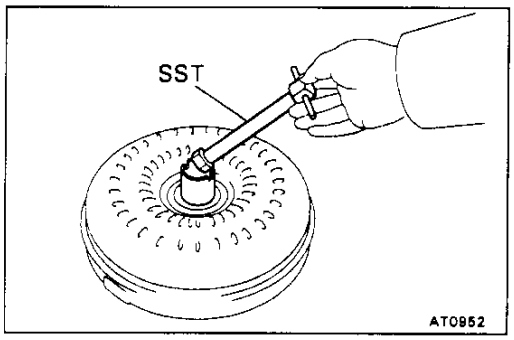

TORQUE CONVERTER AND DRIVE PLATE INSPECTION

AX010-06

1. INSPECT ONE–WAY CLUTCH

(a) Install SST into the inner race of the one–way clutch.
SST 09350–33014 (09351–32010)

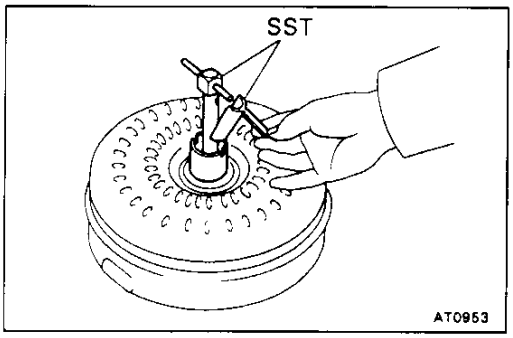

(b) Install SST so that it fits in the notch of the converter hub and outer race of the one–way clutch.
SST 09350–32014 (09351–32020)

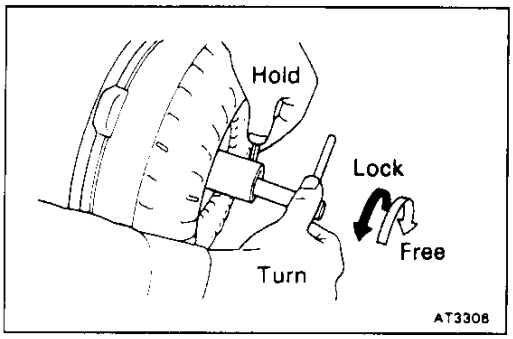

(c) With the torque converter standing on its side, the clutch locks when turned counterclockwise, and rotates freely and smoothly clockwise.
If necessary, clean the converter and retest the clutch.
Replace the converter if the clutch still fails the test.

Downloaded from www.Manualslib.com manuals search engine

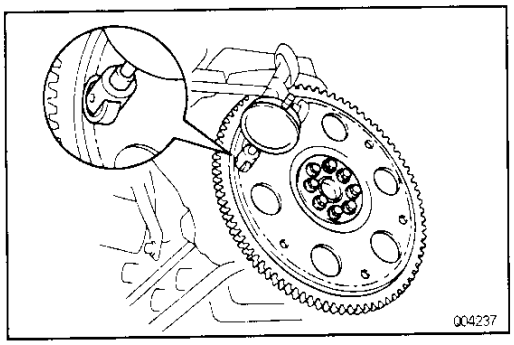

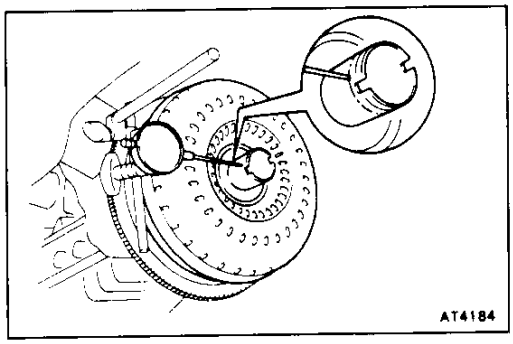

2. MEASURE DRIVE PLATE RUNOUT AND INSPECT RING GEAR

Set up a dial indicator and measure the drive plate runout.

Maximum runout:

0.20 mm (0.0079 in.)

If runout exceeds 0.20 mm (0.0079 in.) or if the ring gear is damaged, replace the drive plate. If installing a new drive plate, note the orientation of spacers and tighten the bolts.

Torque: 83 N·m (850 kgf·cm, 61 ft·lbf)

3. MEASURE TORQUE CONVERTER SLEEVE RUNOUT

(a) Temporarily mount the torque converter to the drive plate. Set up a dial indicator.

Maximum runout:

0.30 mm (0.0118 in.)

If runout exceeds 0.30 mm (0.0118 in.), try to correct by reorienting the installation of the converter. If excessive runout cannot be corrected, replace the torque converter clutch .

HINT: Mark the position of the converter to ensure correct installation.

(b) Remove the torque converter.

AX

Downloaded from www.Manualslib.com manuals search engine

SERVICE SPECIFICATIONS

SERVICE DATA

AX0D0-04

Line pressure (whell locked)	Engine idling			
	D range	363–422 kPa	3.7–4.3 kgf/cm²	53–61 psi
	R range	618–794 kPa	6.3–8.1 kgf/cm²	90–115 psi
	AT stall (Throttle valve fully opened)			
	D range	735–863 kPa	7.5–8.8 kgf/cm²	107–125 psi
	R range	1,373–1,608 kPa	14.0–16.4 kgf/cm²	199–233 psi
Engine stall revolution		2,450 ± 150 rpm		
Time lag	N range → D range	Less than 1.2 seconds		
	N range → R range	Less than 1.5 seconds		
Engine idle speed (Cooling fan and A/C OFF)				
	N range	750 ± 50 rpm		
Throttle cable adjustment (Throttle valve fully opened)		Between boot and face and inner cable stopper		
		0–1 mm	0–0.04 in.	
Torque converter runout	Limit	0.30 mm	0.0118 in.	
Drive plate runout	Limit	0.20 mm	0.0079 in.	

AX

AUTOMATIC SHIFT SCHEDULE

SHIFT POINT
LHD MODEL (3S–FE)

Shift range	Shifting point		Vehicle speed km/h (mph)
D range	Throttle valve fully opened	1→2	55–64 (34–40)
		2→3	100–115 (62–71)
		3→O/D	136–153 (85–95)
		O/D→3	129–145 (80–90)
		3→2	92–106 (57–66)
		2→1	39–46 (24–29)
	Throttle valve fully closed	3→O/D	32–38 (20–24)
		O/D→3	15–20 (9–12)
2 range	Throttle valve fully opened	1→2	55–64 (34–40)
		2→1	39–46 (24–29)
L range	Throttle valve fully opened	2→1	47–54 (29–34)

Downloaded from www.Manualslib.com manuals search engine

RHD MODEL (5S–FE)

NORM MODE

Shift range	Shifting point		Vehicle speed km/h (mph)
D range	Throttle valve fully opened	1→2	53–59 (33–37)
		2→3	99–108 (62–68)
		3→O/D	142–152 (89–95)
		O/D→3	132–142 (83–89)
		3→2	89–98 (56–61)
		2→1	41–46 (26–29)
	Throttle valve fully closed	3→O/D	39–44 (24–27)
		O/D→3	19–23 (12–14)
2 range	Throttle valve fully opened	1→2	53–59 (33–37)
		2→1	41–46 (26–29)
L range	Throttle valve fully opened	2→1	45–50 (28–31)

AX

PWR MODE

Shift range	Shifting point		Vehicle speed km/h (mph)
D range	Throttle valve fully opened	1→2	53–59 (33–37)
		2→3	99–108 (62–68)
		3→O/D	142–152 (89–95)
		O/D→3	132–142 (83–89)
		3→2	89–98 (56–61)
		2→1	41–46 (26–29)
	Throttle valve fully closed	3→O/D	53–58 (33–36)
		O/D→3	19–23 (12–14)
2 range	Throttle valve fully opened	1→2	53–59 (33–37)
		2→1	41–46 (26–29)
L range	Throttle valve fully opened	2→1	45–50 (28–31)

Downloaded from www.Manualslib.com manuals search engine

LOCK—UP POINT

LHD MODEL (3S—FE)

D range Throttle valve opening 3%	Lock—up ON km/h (mph)	Lock—up OFF km/h (mph)
3rd Gear	* 59—68 (37—42)	* 56—64 (35—40)
O/D Gear	70—80 (43—50)	56—64 (35—40)

RHD MODEL (5S—FE)

NORM MODE

D range Throttle valve opening 3%	Lock—up ON km/h (mph)	Lock—up OFF km/h (mph)
3rd Gear	* 65—71 (40—44)	* 60—65 (37—40)
O/D Gear	65—71 (40—44)	60—65 (37—40)

AX

PWR MODE

D range Throttle valve opening 3%	Lock—up ON km/h (mph)	Lock—up OFF km/h (mph)
3rd Gear	* 65—71 (41—44)	* 60—65 (38—41)
O/D Gear	76—82 (48—51)	70—75 (44—47)

*O/D main switch OFF

Downloaded from www.Manualslib.com manuals search engine

AX018-06

TORQUE SPECIFICATION

Part tightened		N·m	kgf·cm	ft·lbf
Air cleaner assembly		5	50	43 in.·lbf
Drive plate x Crankshaft		83	850	61
Torque converter x Drive plate		25	250	18
Valve body x Transaxle case		11	110	8
Testing plug		7.4	75	65 in.·lbf
Oil pan		4.9	50	43 in.·lbf
Oil pan drain plug		49	500	36
Oil strainer		11	110	8
Shift control cable		12	125	9
Starter		39	400	29
RH Drive shaft x Bracket		64	660	47
Front lower sub—frame with sterring gear housing x Exhaust pipe stay		19	195	14
Tie rod end x Steering knucle		49	500	36
Front exhaust pipe		62	630	46
Front exhaust pipe x Exhaust pipe stay		25	250	18
Front exhaust pipe x center exhaust pipe		42	430	31
Engine rear mounting x Exhaust pipe stay		19	195	14
Drive shaft x Steering knuckle		216	2,200	159
Power steering gear assembly x Front sub—frame		127	1,300	94
Engine left mounting		64	650	47
Engine rear mounting x Transaxle		88	890	64
Neutral start switch x Transaxle case	Bolt	5.4	55	48 in.·lbf
	Nut	6.9	70	61 in.·lbf
No.1 manifold stay	Bolt	21	210	15
	Nut	43	440	32
Stiffener plate	12 mm bolt	21	210	15
	14 mm bolt	43	440	32
Transaxle housing x Engine	10 mm bolt	46	470	34
	12 mm bolt	64	650	47
Suspension members	A bolt	35	360	26
	B bolt	80	820	59
	C bolt	175	1,800	130
	D bolt	127	1,300	94
	E bolt	167	1,700	123
	Nut	80	820	59

AX

Downloaded from www.Manualslib.com manuals search engine

AX

Downloaded from www.Manualslib.com manuals search engine

SUSPENSION AND AXLE

TROUBLESHOOTING ..... SA– 2
GENERAL INSPECTION ..... SA– 3
WHEEL ALIGNMENT ..... SA– 5
FRONT WHEEL ALIGNMENT ..... SA– 5
(Super Strut Type) ..... SA– 5
FRONT WHEEL ALIGNMENT ..... SA– 7
(MacPherson Strut Type) ..... SA– 7
REAR WHEEL ALIGNMENT ..... SA– 9
FRONT AXLE ..... SA– 11
(Super Strut Type) ..... SA– 11
DESCRIPTION ..... SA– 11
PREPARATION ..... SA– 12
FRONT AXLE HUB ..... SA– 14
FRONT AXLE ..... SA– 26
(MacPherson Strut Type) ..... SA– 26
DESCRIPTION ..... SA– 26
PREPARATION ..... SA– 27
FRONT AXLE HUB ..... SA– 29
FRONT DRIVE SHAFT ..... SA– 38
(3S–GE) ..... SA– 38
DESCRIPTION ..... SA– 38
PREPARATION ..... SA– 39
FRONT DRIVE SHAFT ..... SA– 41
FRONT DRIVE SHAFT ..... SA– 57
(3S–FE, 5S–FE) ..... SA– 57
DESCRIPTION ..... SA– 57
PREPARATION ..... SA– 58
FRONT DRIVE SHAFT ..... SA– 60
FRONT DRIVE SHAFT ..... SA– 73
(7A–FE) ..... SA– 73
DESCRIPTION ..... SA– 73
PREPARATION ..... SA– 74
FRONT DRIVE SHAFT ..... SA– 75
FRONT SUSPENSION ..... SA– 85
(Super Strut Type) ..... SA– 85
DESCRIPTION ..... SA– 85
PREPARATION ..... SA– 86
FRONT SHOCK ABSORBER ..... SA– 87
LOWER SUSPENSION ARM WITH BALL JOINT ..... SA– 98
STABILIZER BAR SA–107
FRONT SUSPENSION SA–110
(MacPherson Strut Type) SA–110
DESCRIPTION SA–110
PREPARATION SA–111
FRONT SHOCK ABSORBER SA–112
LOWER SUSPENSION ARM SA–118
LOWER BALL JOINT SA–125
STABILIZER BAR SA–128
REAR AXLE HUB AND CARRIER SA–131
DESCRIPTION SA–131
PREPARATION SA–132
REAR AXLE HUB SA–133
REAR AXLE CARRIER SA–137
REAR SUSPENSION SA–141
DESCRIPTION SA–141
PREPARATION SA–142
REAR SHOCK ABSORBER SA–143
LOWER SUSPENSION ARM AND STRUT ROD SA–149
STABILIZER BAR SA–154
SERVICE SPECIFICATIONS SA–157

SA

Downloaded from www.Manualslib.com manuals search engine

TROUBLESHOOTING

SA00J-06

Use the table to help you find the cause of the problem. The numbers indicate the the priority of the likely case of the problem. Check each part in order. If necessary, replace these parts.

See Page / Parts Name / Trouble	Tires (SA-3)	Cold tire inflation pressure (SA-3)	Wheel alignment (SA-5)	Springs (SA-87, 112, 143)	Stabilizer bar (SA-107, 128, 154)	Shock absorber (SA-87, 112, 143)	Ball joint (SA-98, 125)	Hub bearings (SA-14, 29)	Steering linkage (–)	Steering gear (–)	Suspension parts (–)	Overloaded (–)	Wheel balance (–)
Wander/pulls	1		2					4	3	5	6		
Bottoming				2		3						1	
Sways/pitches	1				2	3							
Front wheel shimmy	1		4			3	5	6	7	8			2
Abnormal tire wear		1	2			4					3		

V003:3

SA

Downloaded from www.Manualslib.com manuals search engine

GENERAL INSPECTION

SA1D6-01

1. INSPECT TIRE

(a) Check the tires for wear and for the proper inflation pressure.

Cold tire inflation pressure

Tire size	Front kPa (kgf/cm², psi)	Rear kPa (kgf/cm², psi)
195/65R14 89H	220 (2.2, 32)	220 (2.2, 32)
205/55R15 87V	240 (2.4, 35)	240 (2.4, 35)

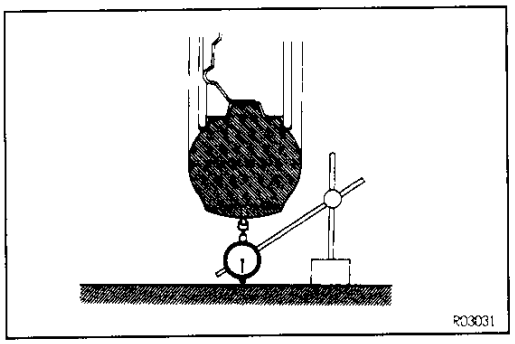

(b) Check the tire runout.

Tire runout:

Less than 1.4 mm (0.055 in.)

SA

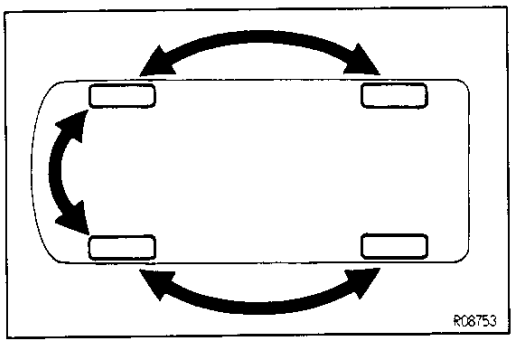

2. ROTATING TIRES

Rotate the left and right, or front and rear tires.

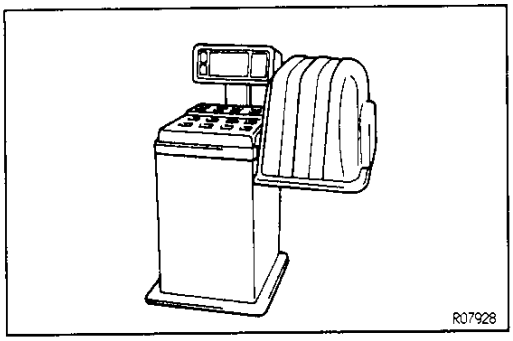

3. INSPECT WHEEL BALANCE

(a) Check and adjust the Off—the—car balance.

(b) If necessary, check and adjust the On—the—car balance.

Unbalance after adjustment:

8.0 g (0.018 lb) or less

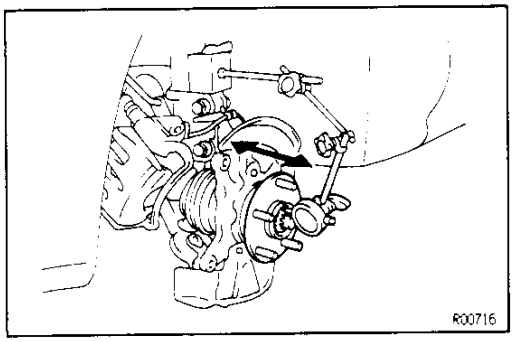

4. CHECK WHEEL BEARING LOOSENESS

(a) Check the backlash in bearing shaft direction.

Maximum:

0.05 mm (0.0020 in.)

Downloaded from www.Manualslib.com manuals search engine

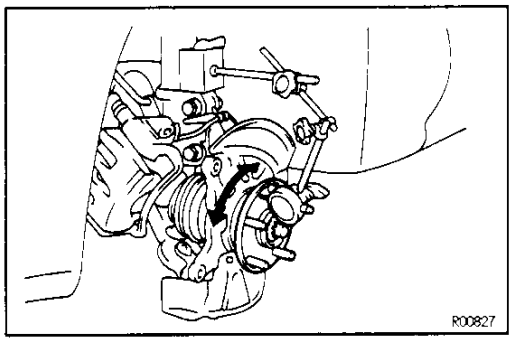

(b) Check the axle hub deviation.
Maximum:
0.05 mm (0.0020 in.)

5. CHECK FRONT SUSPENSION FOR LOOSENESS

6. CHECK STEERING LINKAGE FOR LOOSENESS

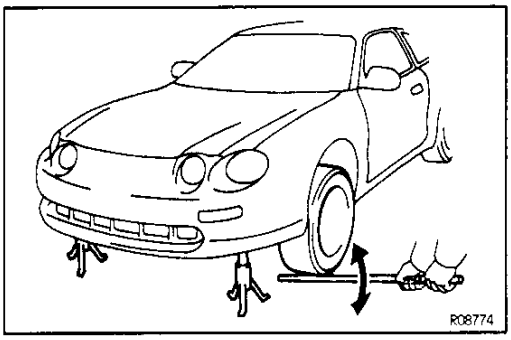

7. CHECK BALL JOINT FOR EXCESSIVE LOOSENESS

(a) Jack up the front of the vehicle.

(b) Move the wheel up and down, and check that the ball joint has not excessive play.

8. CHECK SHOCK ABSORBERS WORK PROPERLY

- Check for oil leak
- Check mounting bushings for wear
- Bounce front and rear of the vehicle

Downloaded from www.Manualslib.com manuals search engine

WHEEL ALIGNMENT

FRONT WHEEL ALIGNMENT

(Super Strut Type)

SA1D6-01

1. MEASURE VEHICLE HEIGHT

Vehicle height:

182.6 mm (7.19 in.)

Measuring point:

Measure from the ground to the center of the suspension lower No.1 arm mounting bolt.

NOTICE: Before inspection the wheel alignment, adjust the vehicle height to specification.

If the vehicle height is not standard, try to adjust it by pushing down on or lifting the body.

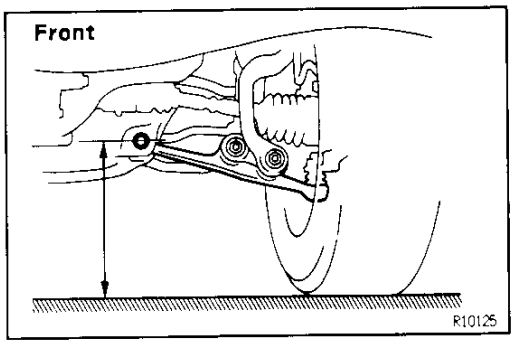

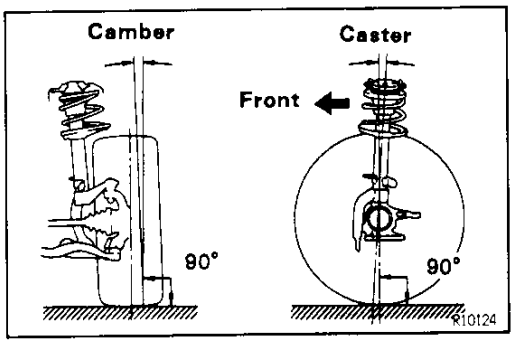

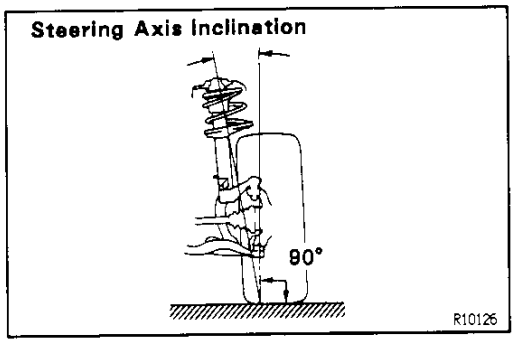

2. INSPECT CAMBER, CASTER AND STEERING AXIS INCLINATION

Camber:

–0°13′ ± 45′

Left–right error:

45′ or less

Caster:

2°36′ ± 45′

Left–right error:

45′ or less

Steering axis inclination:

2°50′ ± 45′

HINT: Camber, caster and steering axis inclination are not adjustable. If measurements are not within specification, inspect the suspension parts for damaged and/or worn out parts and replace them as necessary.

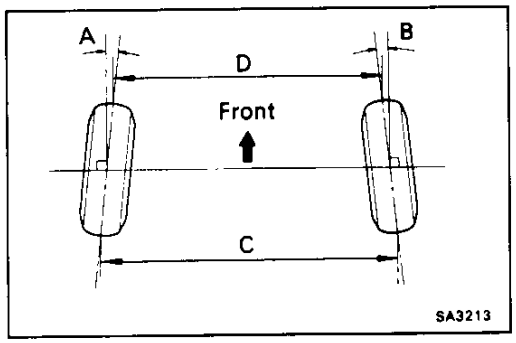

3. INSPECT TOE–IN

Toe–in (total):

A+B = 0°12′ ± 12′

(C–D = 2 ± 2 mm, 0.08 ± 0.08 in.)

If the toe–in is not within the specification, adjust it at the tie rod end.

Downloaded from www.Manualslib.com manuals search engine

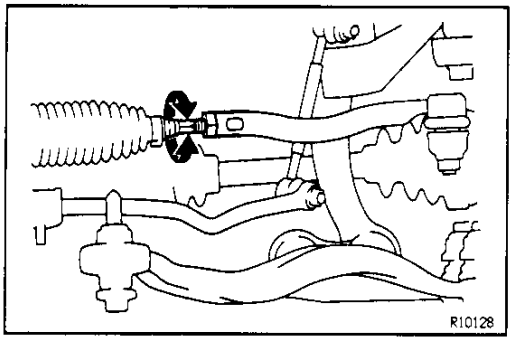

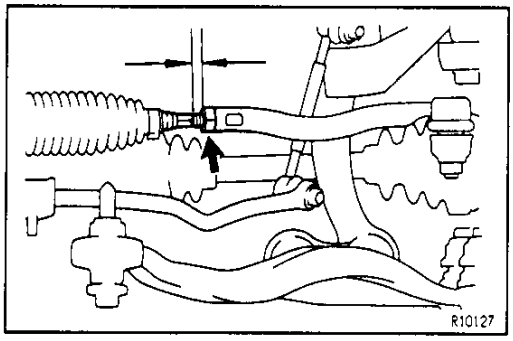

SA

4. ADJUST TOE–IN

(a) Remove the boot clamps.

(b) Loosen the tie rod end lock nuts.

(c) Turn the left and right tie rod ends an equal amount to adjust the toe–in.

Toe–in (total):

A+B = 0°12′ ± 6′

(C–D = 2 ± 1 mm, 0.08 ± 0.04 in.)

HINT: Measure that the lengths of the left and right tie rod end length are the same.

Tie rod end length difference:

1.5 mm (0.059 in.) or less

(d) Torque the tie rod end lock nuts.

Torque: 56 N·m (570 kgf·cm, 42 ft·lbf)

(e) Place the boot on the seat and install the clamp.

HINT: Make sure that the boots are not twisted.

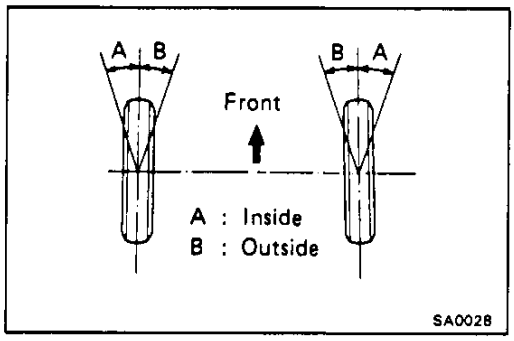

5. INSPECT WHEEL ANGLE

Wheel angle

Inside wheel	Outside wheel (reference)
34°28′ ± 2°	28°22′

If the wheel angles differ from the specification, check the difference of the left and right tie rod end length.

Tie rod end length difference:

1.5 mm (0.059 in.) or less

Downloaded from www.Manualslib.com manuals search engine

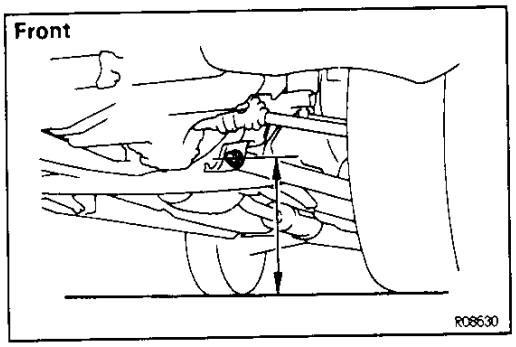

FRONT WHEEL ALIGNMENT (MacPherson Strut Type)

SA107-01

1. MEASURE VEHICLE HEIGHT

Vehicle height:

182.6 mm (7.19 in.)

Measuring point:

Measure from the ground to the center of the front side lower arm mounting bolt.

NOTICE: Before inspection the wheel alignment, adjust the vehicle height to specification.

If the vehicle height is not standard, try to adjust it by pushing down on or lifting the body.

SA

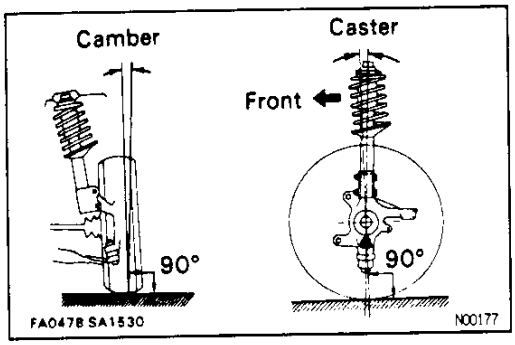

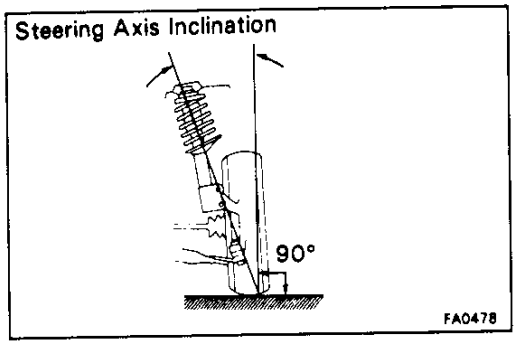

2. INSPECT CAMBER, CASTER AND STEERING AXIS INCLINATION

Camber:

–0°46′ ± 45′

Left–right error:

45′ or less

Caster:

2°05′ ± 45′

Left–right error:

45′ or less

Steering axis inclination:

14°58′ ± 45′

HINT: Camber, caster and steering axis inclination are not adjustable. If measurements are not within specification, inspect the suspension parts for damaged and/or worn out parts and replace them as necessary.

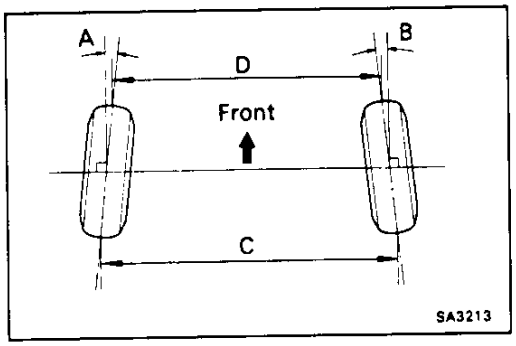

3. INSPECT TOE–IN

Toe–in (total):

A+B = 0° ± 12′

(C–D = 0 ± 2 mm, 0 ± 0.08 in.)

If the toe–in is not within the specification, adjust it at the tie rod end.

Downloaded from www.Manualslib.com manuals search engine

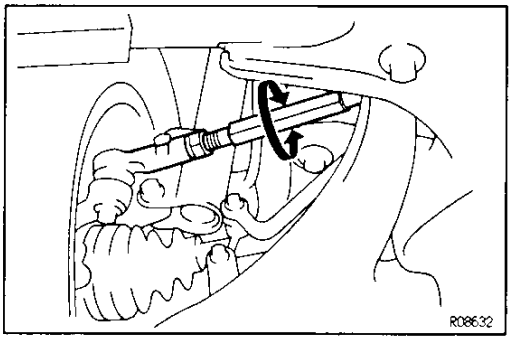

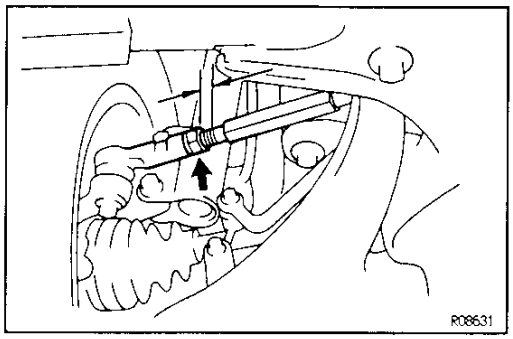

SA

4. ADJUST TOE–IN

(a) Remove the boot clamps.

(b) Loosen the tie rod end lock nuts.

(c) Turn the left and right tie rod ends an equal amount to adjust the toe–in.

Toe–in (total):

A+B = 0° ± 6′

(C–D = 0 ± 1 mm, 0 ± 0.04 in.)

HINT: Measure that the lengths of the left and right tie rod end length are the same.

Tie rod end length difference:

1.5 mm (0.059 in.) or less

(d) Torque the tie rod end lock nuts.

Torque: 56 N·m (570 kgf·cm, 42 ft·lbf)

(e) Place the boot on the seat and install the clamp.

HINT: Make sure that the boots are not twisted.

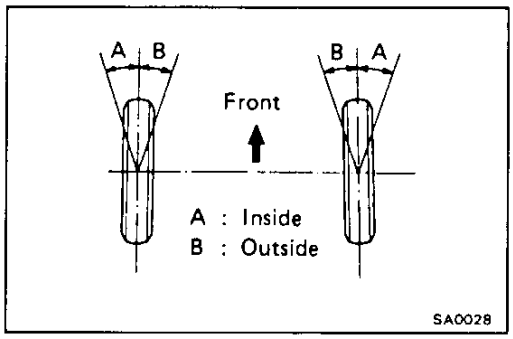

5. INSPECT WHEEL ANGLE

Wheel angle

Inside wheel	Outside wheel (reference)
36°54′ ± 2°	30°44′

If the wheel angles differ from the specification, check the difference of the left and right tie rod end length.

Tie rod end length difference:

1.5 mm (0.059 in.) or less

Downloaded from www.Manualslib.com manuals search engine

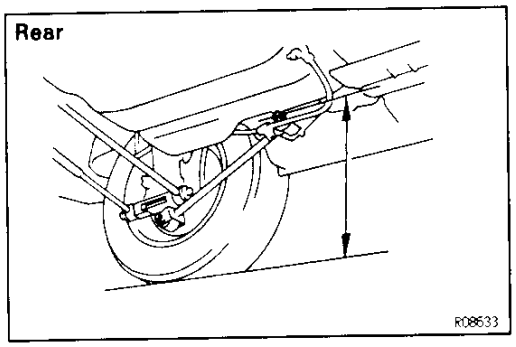

REAR WHEEL ALIGNMENT

SA108-01

1. MEASURE VEHICLE HEIGHT

Vehicle height:

250.0 mm (9.84 in.)

Measuring point:

Measure from the ground to the center of the strut rod mounting bolt.

NOTICE: Before inspecting the wheel alignment, adjust the vehicle height to specification.

If the vehicle height is not standard, try to adjust it by pushing down on or lifting the body.

SA

2. INSPECT CAMBER

Camber

3S–GE engine	–1°11′ ± 45′
3S–FE engine	–1°11′ ± 45′
5S–FE engine	–1°10′ ± 45′
7A–FE engine	–1°16′ ± 45′

Left–right error:

45′ or less

HINT: Camber is not adjustable, if measurement is not within specification, inspect and replace the suspension parts as necessary.

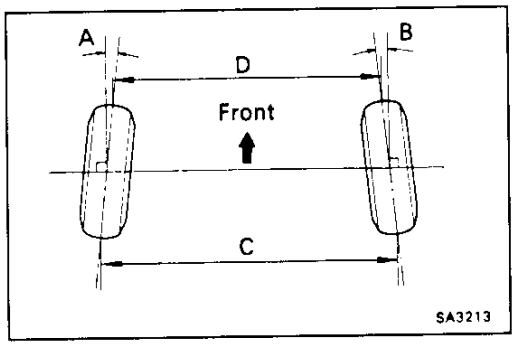

3. INSPECT TOE–IN

Toe–in (total):

A+B 0°21′ ± 12′

(C–D 3.5 ± 2 mm, 0.14 ± 0.08 in.)

If the toe–in is not within the specification, adjust it at the No.2 lower suspension arm.

Downloaded from www.Manualslib.com manuals search engine

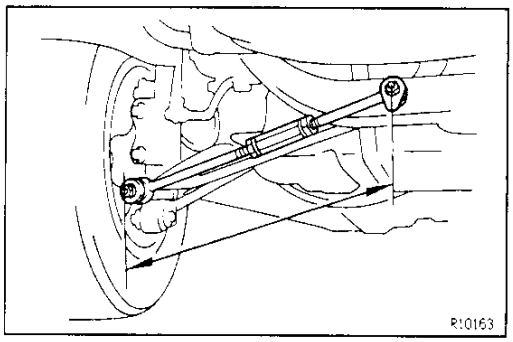

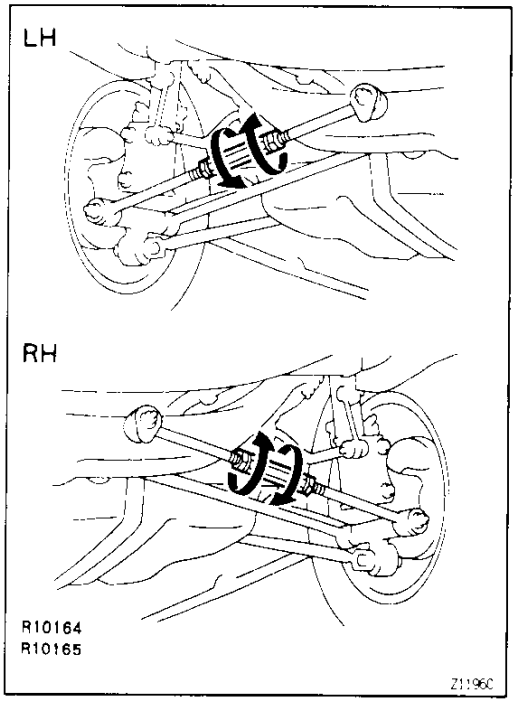

SA

4. ADJUST TOE–IN

Toe–in (total):

A+B 0°21′ ± 6′

(C–D 3.5 ± 1 mm, 0.14 ± 0.04 in.)

(a) Measure the length of the left and right No.2 lower suspension arm.

Left–right difference:

1 mm (0.04 in.) or less

If the left–right difference is greater than the specification, adjust the length.

(b) Loosen the lock nuts.

(c) Turn the left and right adjusting tube an equal amount to adjust toe–in.

HINT: One turn of the each adjusting tube will adjust the toe–in about 0.7°(7.0 mm, 0.28 in.).

(d) Torque the lock nuts.

Torque: 75 N·m (760 kgf·cm, 55 ft·lbf)

Downloaded from www.Manualslib.com manuals search engine

FRONT AXLE
(Super Strut Type)

DESCRIPTION

SA01T-07

The wheel bearings are double—row angular ball bearings combined with the oil seals having small rolling resistance and are maintenance free.
The preload of the bearings can be determined only tightening the axle hub nut to a specified torque, improving serviceability.

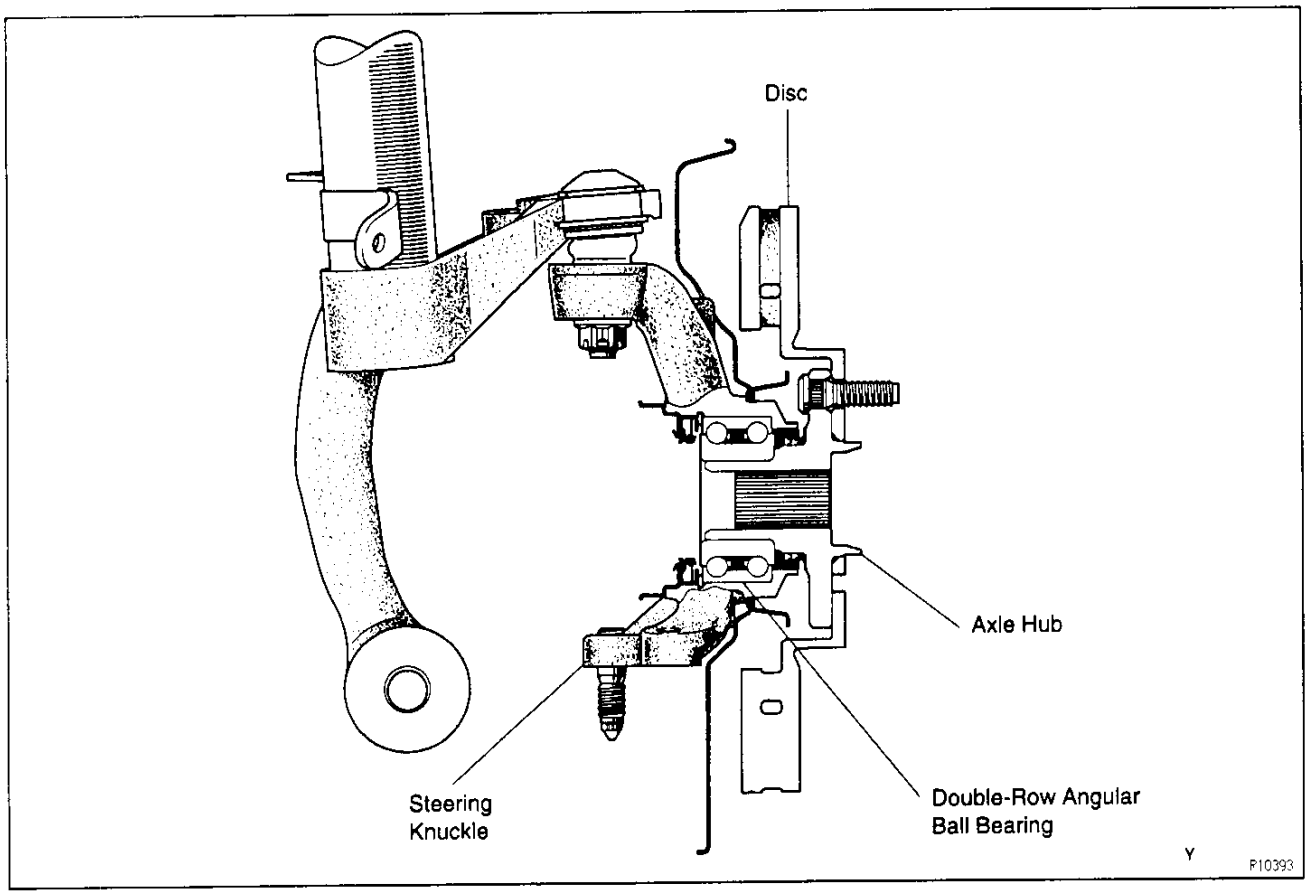

Downloaded from www.Manualslib.com manuals search engine

PREPARATION

SST (SPECIAL SERVICE TOOLS)

SA01U-08

	09308-00010 Oil Seal Puller	
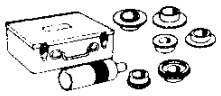	09316-60010 Transmission & Transfer Bearing Replacer	
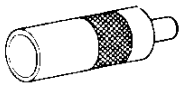	(09316-00010) Replacer Pipe	
	(09316-00040) Replacer "C"	
	09520-00031 Rear Axle Shaft Puller	
	09527-17011 Rear Axle Shaft Bearing Remover	
	09608-12010 Front Hub & Drive Pinion Bearing Replacer Set	
	(09608-00020) Remover & Replacer Handle	
	(09608-00040) Replacer	
	(09608-00060) Drive Pinion Front Bearing Cup Replacer	
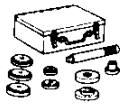	09608-20012 Front Hub & Drive Pinion Bearing Tool Set	
	(09608-03020) Handle	
	(09608-03060) Replacer	

SA

Downloaded from www.Manualslib.com manuals search engine

	(09608–03090)	Replacer	
	09608–32010	Steering Knuckle Oil Seal Replacer	Bearing installation Axle hub installation Dust deflector installation
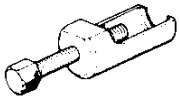	09610–20012	Pitman Arm Puller	Tie rod end installation
	09620–30010	Steering Gear Box Replacer Set	
	(09625–30010)	Steering Main Shaft Bearing Replacer	
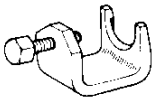	09628–10011	Ball Joint Puller	Hub bolt removal
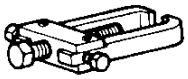	09628–62011	Ball Joint Puller	
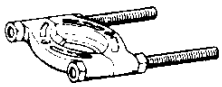	09950–00020	Bearing Remover	

SA01V–02

RECOMMENDED TOOLS

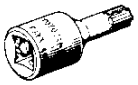	09042–00010	Torx Socket T30	
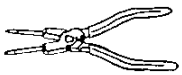	09905–00013	Snap Ring Pliers	

SA01W–01

EQUIPMENT

Dial indicator	
Torque wrench	

SA

Downloaded from www.Manualslib.com manuals search engine

FRONT AXLE HUB
COMPONENTS

8A01X-07

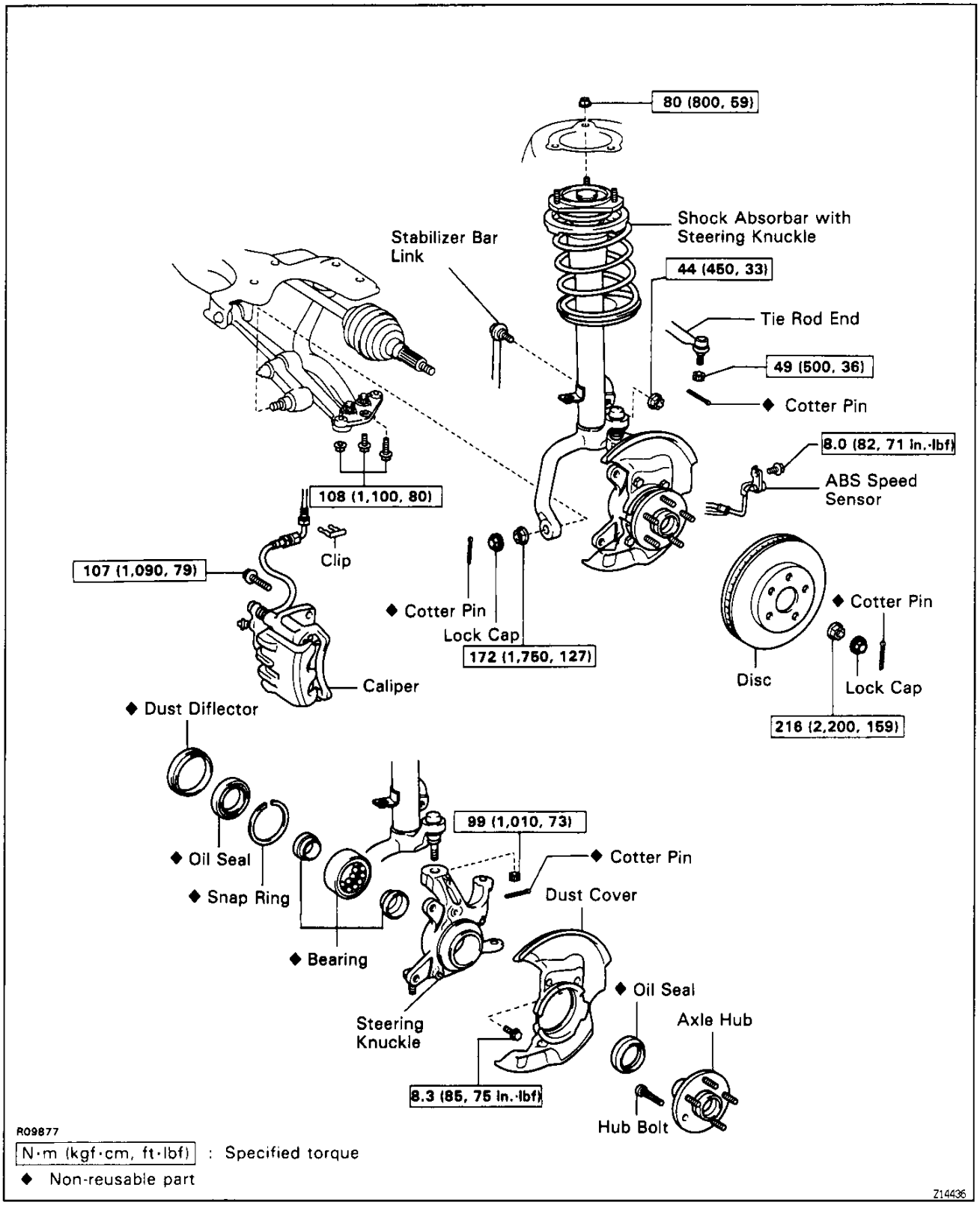

Downloaded from www.Manualslib.com manuals search engine

SA1D0-01

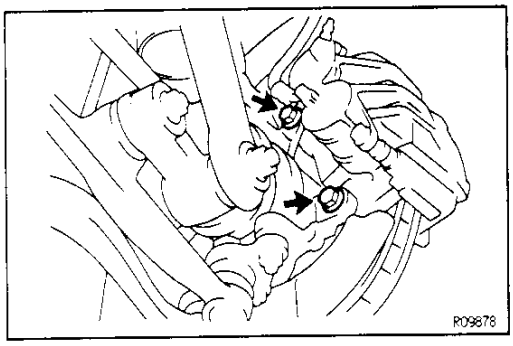

SHOCK ABSORBER WITH STEERING KNUCKLE REMOVAL

1. **JACK UP VEHICLE, REMOVE FRONT WHEEL**
2. **CHECK BEARING BACKLASH AND AXLE HUB DEVIATION**

(a) Remove the 2 brake caliper set bolts.
(b) Suspend the brake caliper securely.

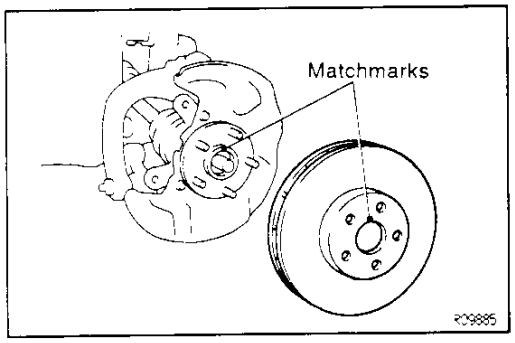

(c) Place matchmarks on the disc and axle hub.
(d) Remove the disc.

SA

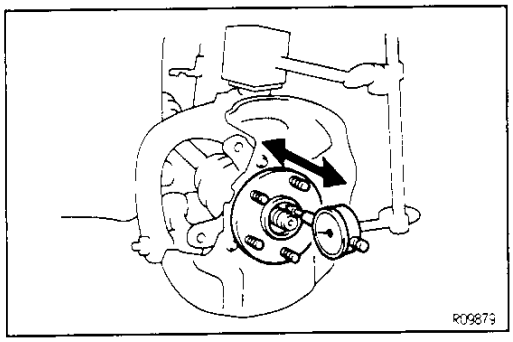

(e) Place the dial indicator near the center of the axle hub and check the backlash in the bearing shaft direction.
Maximum:
0.05 mm (0.0020 in.)
If greater than the specified maximum, replace the bearing.

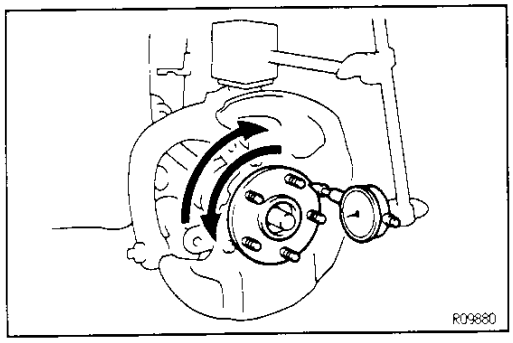

(f) Using a dial indicator, check the deviation at the surface of the axle hub outside the hub bolt.
Maximum:
0.05 mm (0.0020 in.)
If greater than the specified maximum, replace the axle hub.

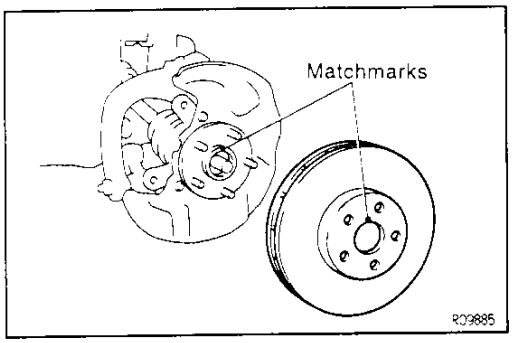

(g) Align the matchmarks and install the disc to the axle hub.
(h) Install the brake caliper to the axle hub.

Downloaded from www.Manualslib.com manuals search engine

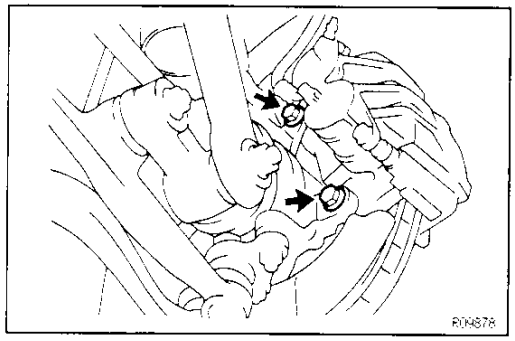

3. REMOVE DRIVE SHAFT LOCK NUT

(a) Remove the cotter pin and lock cap.

(b) While applying the brakes, remove the nut.

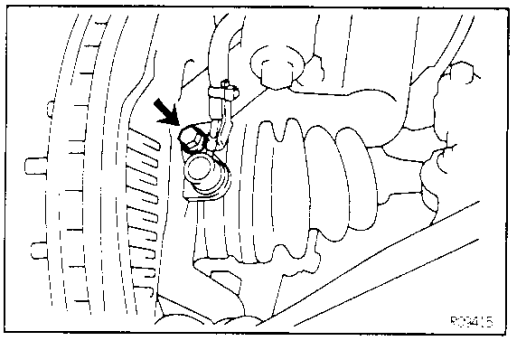

SA

4. w/ ABS:
REMOVE ABS SPEED SENSOR

Remove the ABS speed sensor set bolt.

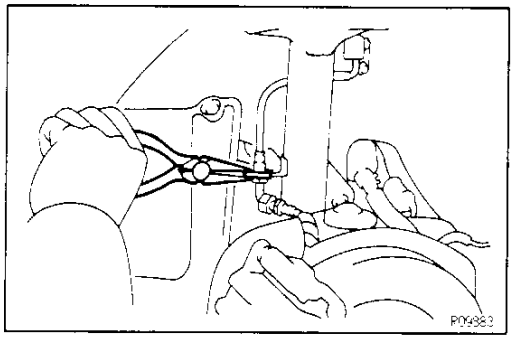

5. DISCONNECT BRAKE HOSE

(a) Remove the clip from the brake bracket.

(b) Pull off the brake hose from the shock absorber.

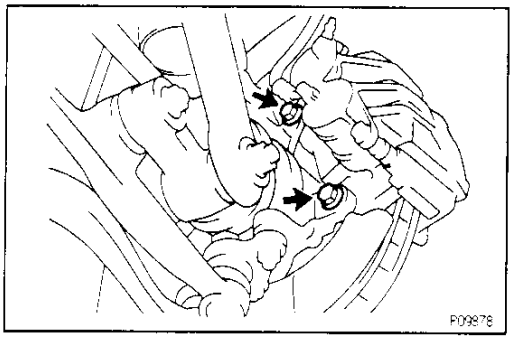

6. REMOVE BRAKE CALIPER

(a) Remove the 2 brake caliper set bolts.

(b) Suspend the brake caliper secusely.

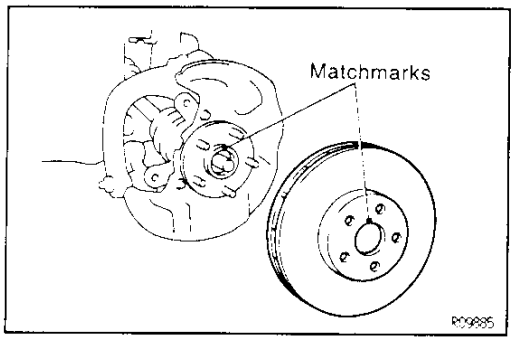

(c) Place matchmarks on the disc and axle hub.

(d) Remove the disc.

Downloaded from www.Manualslib.com manuals search engine

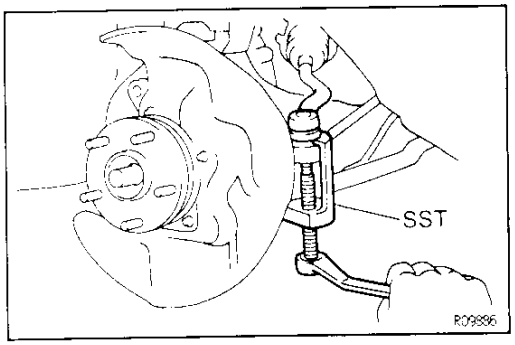

7. DISCONNECT TIE ROD END

(a) Remove the cotter pin and remove the nut.

(b) Using SST, disconnect the tie rod end from the steering knuckle.
SST 09610−20012

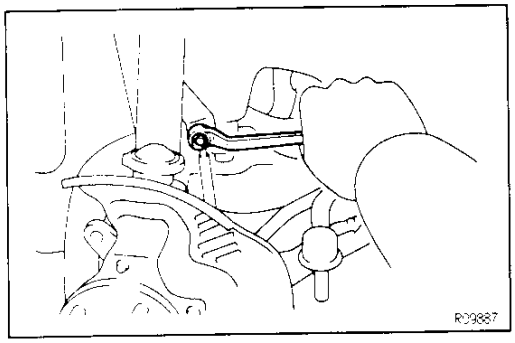

8. DISCONNECT STABILIZER BAR LINK

Remove the nut and disconnect the stabilizer bar link from shock absorber.
HINT: If the ball joint stud turns together with the nut, use a hexagon wrench to hold the stud.

SA

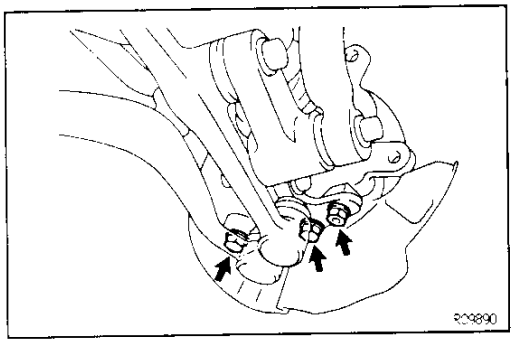

9. DISCONNECT LOWER BALL JOINT ATTACHMENT

Remove the nut and 2 bolts and disconnect the steering knuckle from lower ball joint attachment.

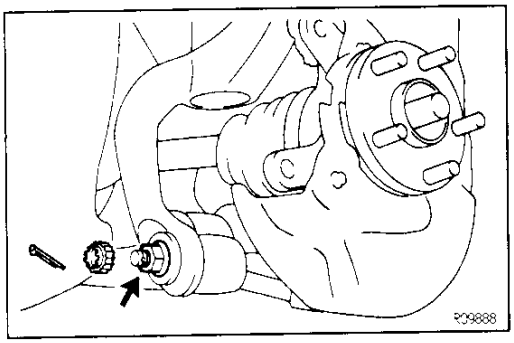

10. DISCONNECT CAMBER CONTROL ARM

(a) Remove the cotter pin and lock cap, remove the nut.

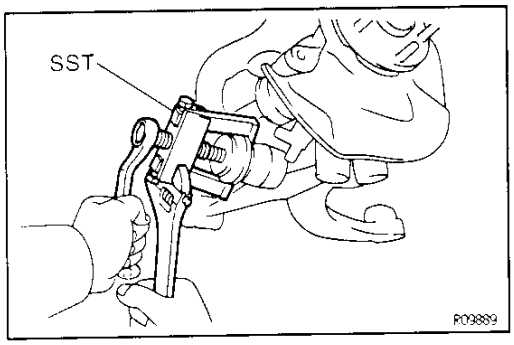

(b) Using SST, disconnect the camber control arm from shock absorber.
SST 09628−62011

Downloaded from www.Manualslib.com manuals search engine

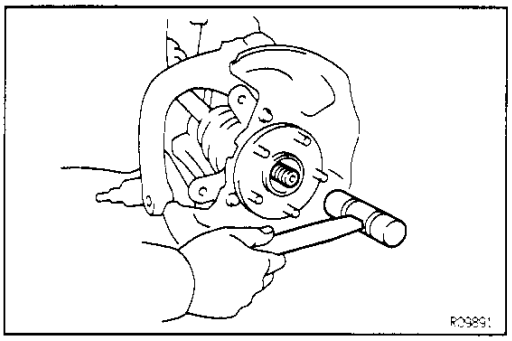

11. DISCONNECT DRIVE SHAFT

(a) Using a plastic hammer, disconnect the drive shaft from the axle hub.
NOTICE: Cover the drive shaft boot with cloth to protect it from damage.

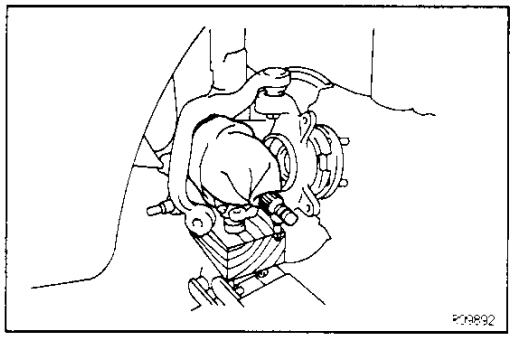

(b) Place wooden block on the jack and support the lower ball joint attachment.

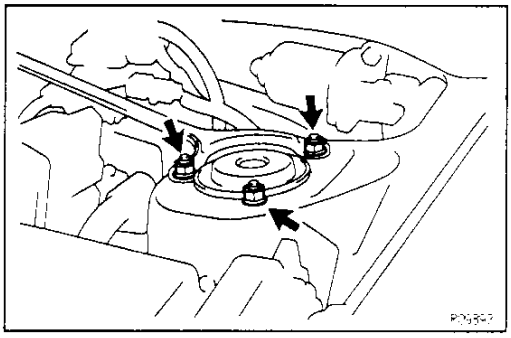

12. REMOVE SHOCK ABSORBER WITH STEERING KNUCKLE

(a) Remove the 3 nuts on upper side of the shock absorber.
(b) Remove the shock absorber with steering knuckle.

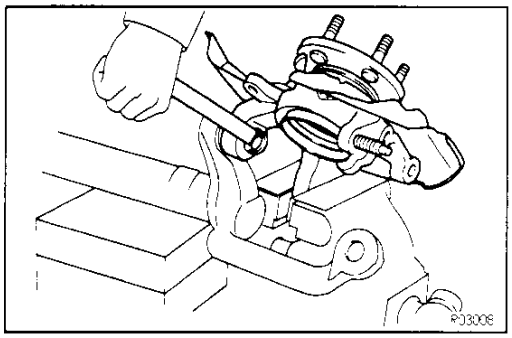

SHOCK ABSORBER WITH STEERING KNUCKLE DISASSEMBLY

8A0DT-02

DISCONNECT STEERING KNUCKLE FROM SHOCK ABSORBER

(a) Remove the cotter pin and the nut.

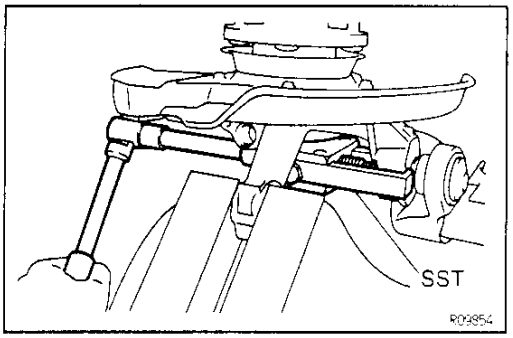

(b) Using SST, disconnect the steering knuckle from shock absorber.
SST 09628–62011

Downloaded from www.Manualslib.com manuals search engine

SA0DU-01

FRONT AXLE HUB DISASSEMBLY

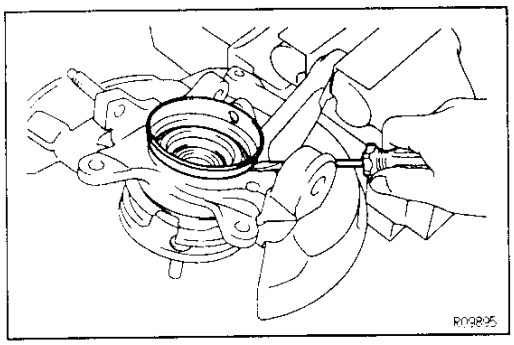

1. REMOVE DUST DEFLECTOR

Using a screwdriver, remove the dust deflector.

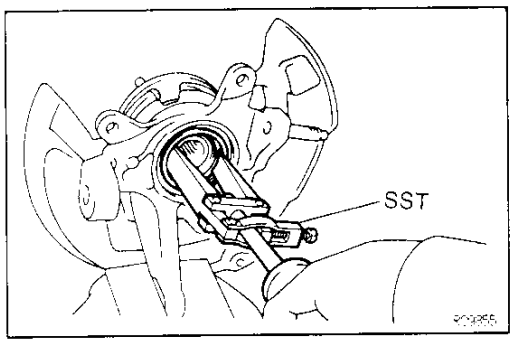

2. REMOVE INNER OIL SEAL

Using SST, remove the inner oil seal.
SST 09308–00010

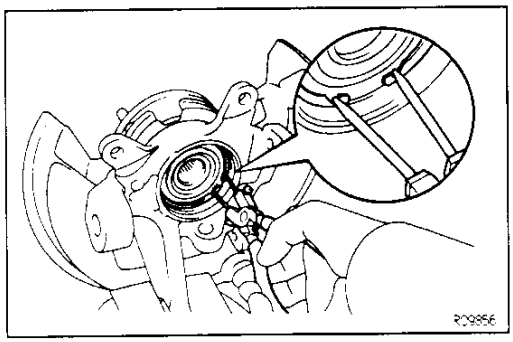

3. REMOVE SNAP RING

Using snap ring pliers, remove the snap ring.

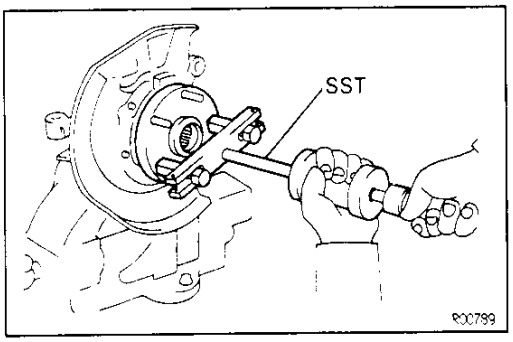

4. REMOVE AXLE HUB

(a) Using SST, remove the axle hub.
SST 09520–00031

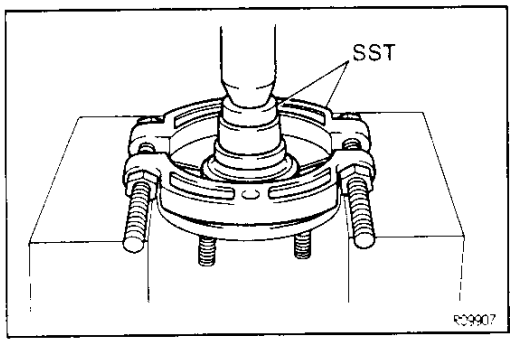

(b) Using SST and a press, remove the inner race (outside) from the axle hub.
SST 09620–30010 (09625–30010),
09950–00020

SA

Downloaded from www.Manualslib.com manuals search engine

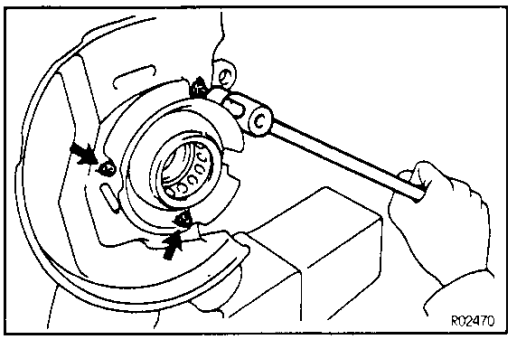

5. REMOVE DUST COVER

Using a torx wrench, remove the 4 bolts and dust cover.

Torx wrench: T30 (Part No.09042–00010 or locally manufactured tool)

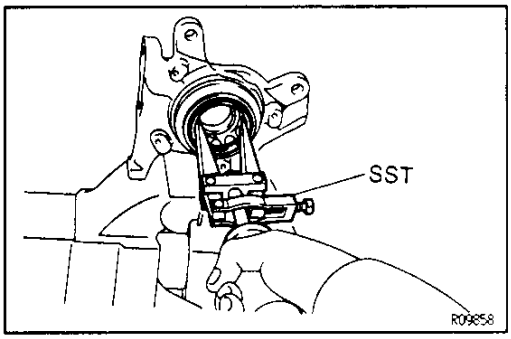

6. REMOVE OUTER OIL SEAL

Using SST, remove the outer oil seal.

SST 09308–00010

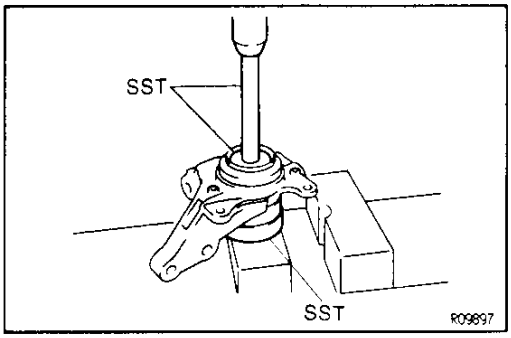

7. REMOVE BEARING FROM STEERING KNUCKLE

Using SST and a press, remove the bearing from the steering knuckle.

SST 09608–12010 (09608–00020, 09608–00060), 09527–17011

FRONT AXLE HUB ASSEMBLY

SA0DV-02

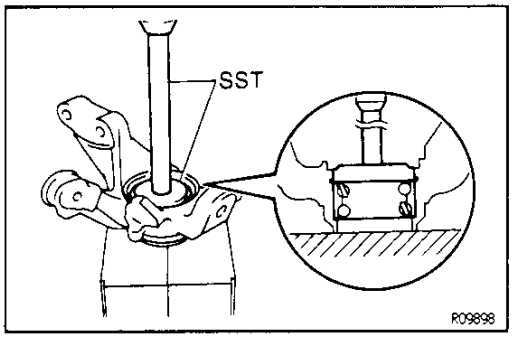

1. INSTALL BEARING

(a) Remove the inner races from a new bearing.

(b) Using SST and a press, install the bearing to the steering knuckle.

SST 09608–20012 (09608–03020, 09608–03090)

(c) Install the inner races.

NOTICE: If the inner race and balls come loose from the bearing outer race, be sure to install them on the same side as before.

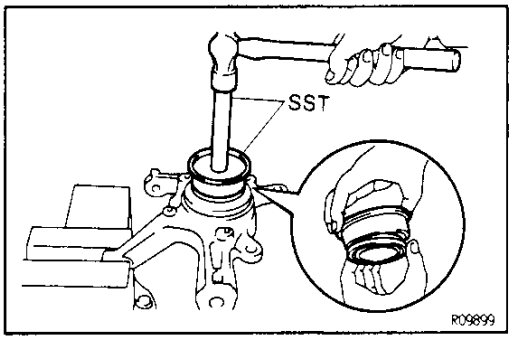

2. INSTALL OUTER OIL SEAL

Using SST, install a new outer oil seal.

SST 09608–20012 (09608–03020), 09608–32010

Downloaded from www.Manualslib.com manuals search engine

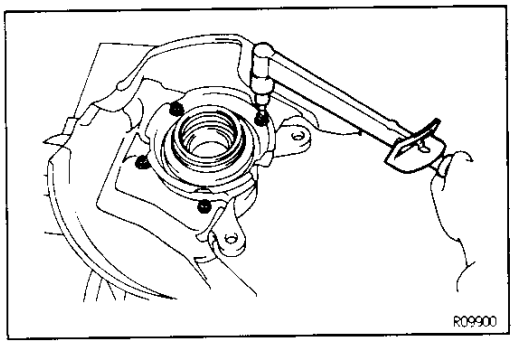

3. INSTALL DUST COVER

Using a torx wrench, install the dust cover with the 4 bolts.

Torx wrench: T30 (Part No.09042–00010 or locally manufactured tool)

Torque: 8.3 N·m (85 kgf·cm, 74 in.·lbf)

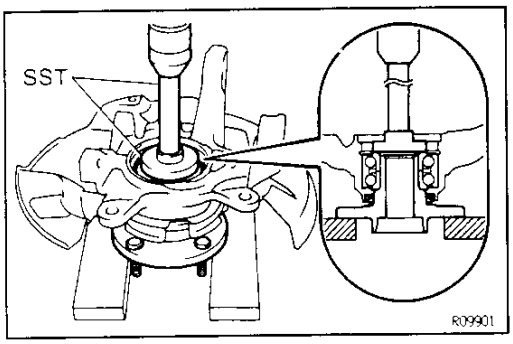

4. INSTALL AXLE HUB

Using SST and a press, install the axle hub.

SST 09608–12010 (09608–00020, 09608–00040)
09608–32010

SA

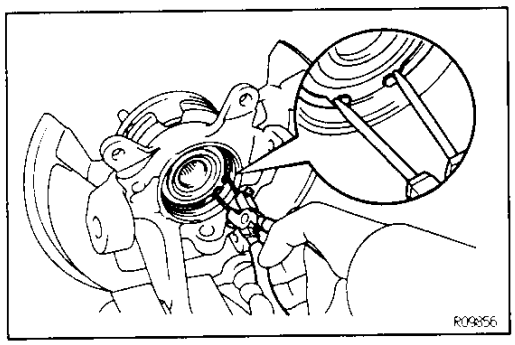

5. INSTALL SNAP RING

Using snap ring pliers, install the snap ring.

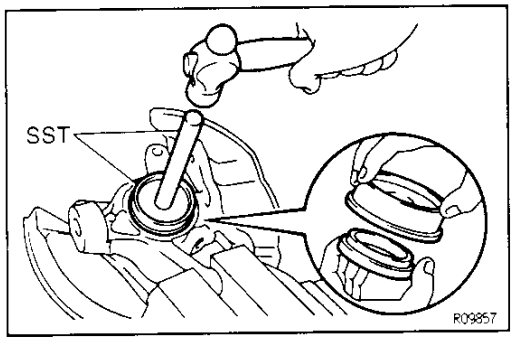

6. INSTALL INNER OIL SEAL

Using SST and a hammer, install a new inner oil seal.

SST 09608–20012 (09608–03020),
09608–32010

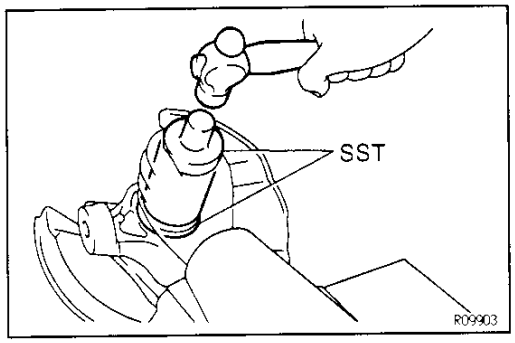

7. INSTALL DUST DEFLECTOR

Using SST and a hammer, install a new dust deflector.

SST 09316–60010 (09316–00010, 09316–00040)

Downloaded from www.Manualslib.com manuals search engine

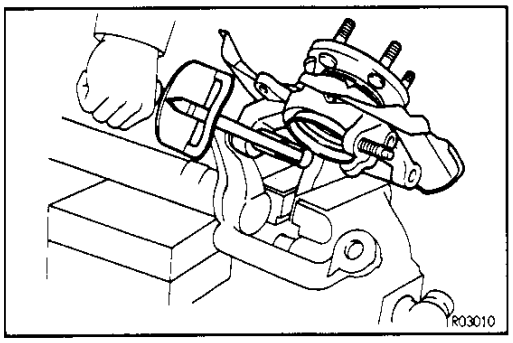

SHOCK ABSORBER WITH STEERING KNUCKLE ASSEMBLY

CONNECT SHOCK ABSORBER TO STEERING KNUCKLE

(a) Clamp the steering knuckle in a vise.

(b) Install the upper ball joint with shock absorber and tighten the nut.
Torque: 99 N·m (1,010 kgf·cm, 73 ft·lbf)

(c) Install a new cotter pin.

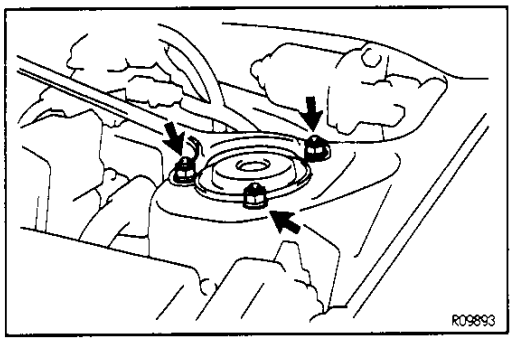

SHOCK ABSORBER WITH STEERING KNUCKLE INSTALLATION

1. INSTALL SHOCK ABSORBER WITH STEERING KNUCKLE

Place the shock absorber and install the 3 nuts.
Torque: 80 N·m (800 kgf·cm, 59 ft·lbf)

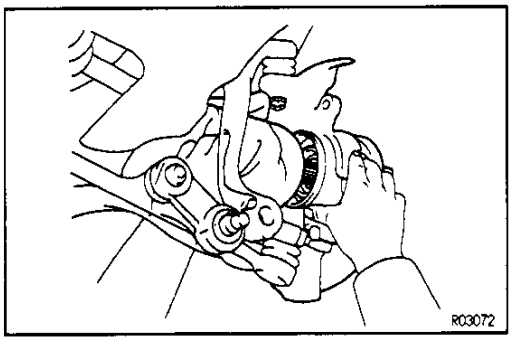

2. CONNECT DRIVE SHAFT

(a) Install the drive shaft to the axle hub.

(b) Temporarily install the lock nut.
NOTICE: Be careful not to damage the boots and inner oil seal.

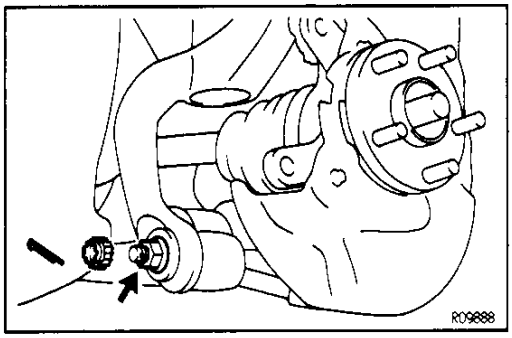

3. CONNECT CAMBER CONTROL ARM

(a) Connect the camber control arm to the shock absorber and tighen the nut.
Torque: 171 N·m (1,754 kgf·cm, 129 ft·lbf)

(b) Install the lock cap and a new cotter pin.

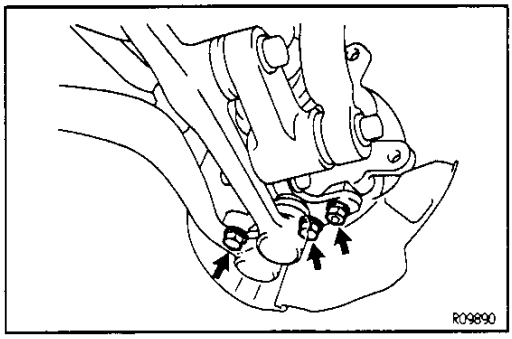

4. CONNECT LOWER BALL JOINT ATTACHMENT

Connect the lower ball joint attachment to the steering knuckle and tighten the 2 bolts and nut.
Torque: 108 N·m (1,100 kgf·cm, 80 ft·lbf)

Downloaded from www.Manualslib.com manuals search engine

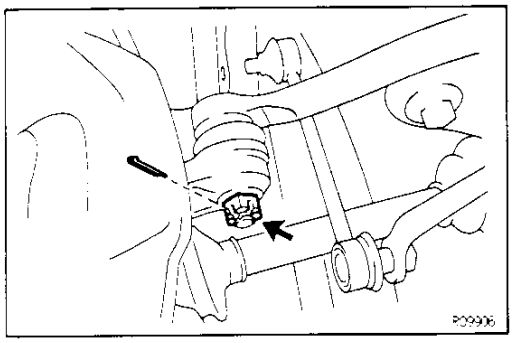

5. CONNECT TIE ROD END

(a) Connect the tie rod end to the steering knuckle and tighten the nut.
Torque: 49 N·m (500 kgf·cm, 36 ft·lbf)

(b) Install a new cotter pin.

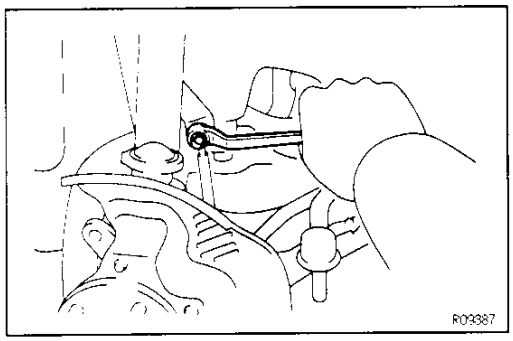

6. INSTALLL STABILIZER BAR LINK

Connect the stabilizer bar link to the shock absorber and tighen the nut.
Torque: 44 N·m (450 kgf·cm, 33 ft·lbf)
HINT: If the ball joint stud turns together with the nut, use a hexagon wrench to hold the stud.

SA

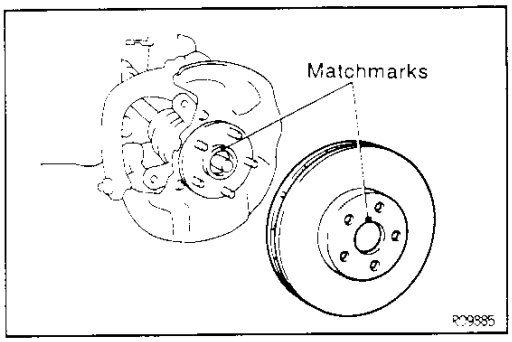

7. INSTALL FRONT BRAKE CALIPER

(a) Align the matchmarks and install the disc to the axle hub.

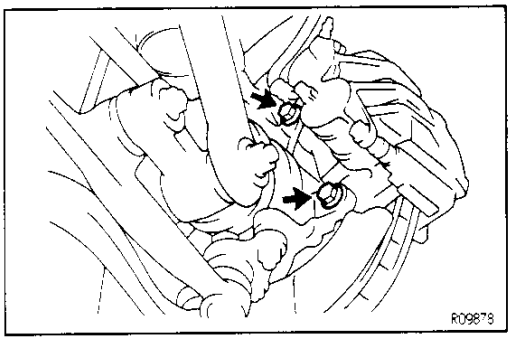

(b) Install the brake caliper with 2 bolts.
Torque: 107 N·m (1,090 kgf·cm, 79 ft·lbf)

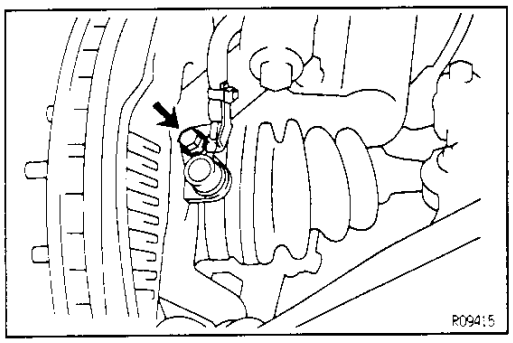

8. w/ ABS:
INSTALL ABS SPEED SENSOR
Torque: 8.0 N·m (82 kgf·cm, 71 in.·lbf)

Downloaded from www.Manualslib.com manuals search engine

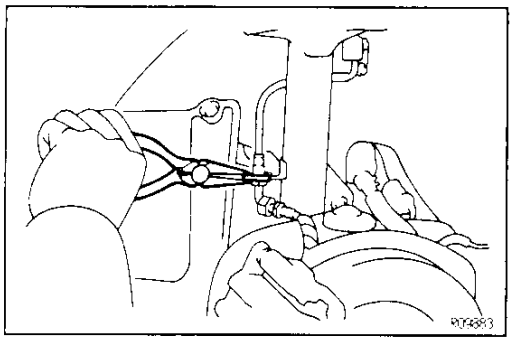

9. INSTALL BRAKE HOSE

(a) Run the brake hose through the brake hose bracket.

(b) Using pliers, install the clip.

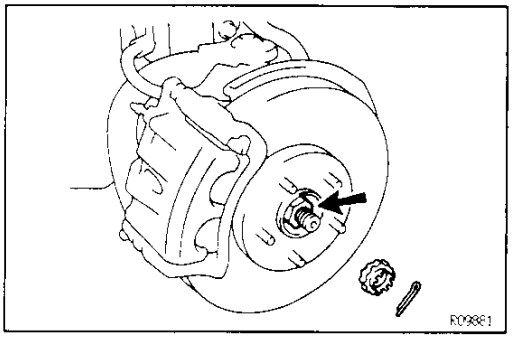

10. INSTALL DRIVE SHAFT LOCK NUT

(a) While applying the brakes, install the nut.
Torque: 216 N·m (2,200 kgf·cm, 159 ft·lbf)

(b) Install the lock cap and a new cotter pin.

11. INSTALL FRONT WHEEL AND LOWER VEHICLE
Torque: 103 N·m (1,050 kgf·cm, 76 ft·lbf)

12. CHECK FRONT WHEEL ALIGNMENT
(See page SA–5)

13. w/ ABS:
CHECK ABS SPEED SENSOR SIGNAL
(See page BR–93)

SA

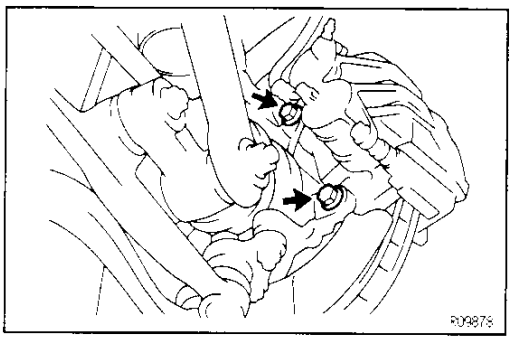

HUB BOLT REPLACEMENT

SA1DB-01

1. JACK UP VEHICLE AND REMOVE FRONT WHEEL

2. REMOVE FRONT BRAKE CALIPER AND DISC

(a) Remove the 2 brake caliper set bolts.

(b) Hang up the brake caliper using wire, etc.

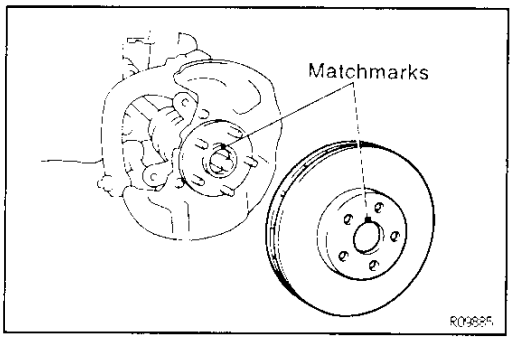

(c) Place matchmarks on the disc and axle hub.

(d) Remove the disc.

Downloaded from www.Manualslib.com manuals search engine

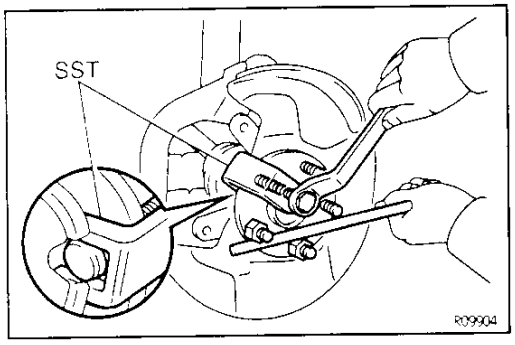

3. REMOVE HUB BOLT

Using SST, remove the hub bolt.
SST 09628–10011

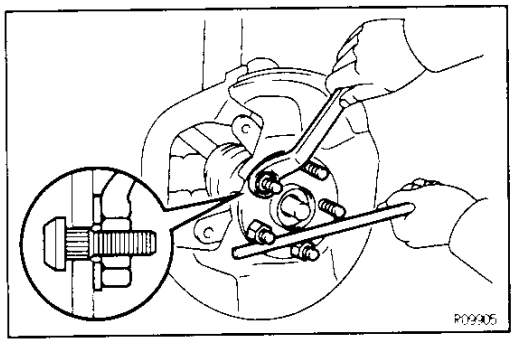

4. INSTALL HUB BOLT

Install washer and nut to the hub bolt, as shown in the illustration, and install the hub bolt by torquing the nut.

SA

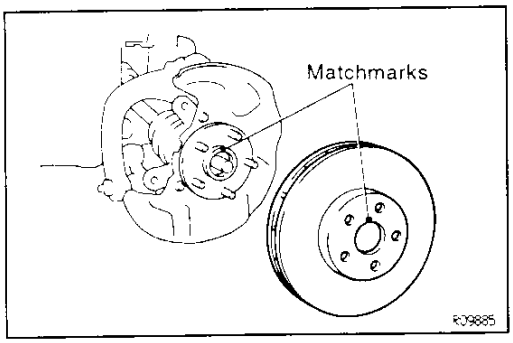

5. INSTALL FRONT DISC AND BRAKE CALIPER

(a) Align the matchmarks and install the disc to the axle hub.

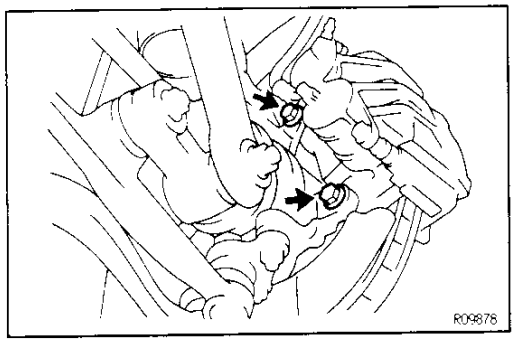

(b) Install the brake caliper with 2 bolts.
Torque: 107 N·m (1,090 kgf·cm, 79 ft·lbf)

6. INSTALL FRONT WHEEL AND LOWER VEHICLE
Torque: 103 N·m (1,050 kgf·cm, 76 ft·lbf)

Downloaded from www.Manualslib.com manuals search engine

FRONT AXLE
(MacPherson Strut Type)

DESCRIPTION

SA01T-06

The wheel bearings are double—row angular ball bearings combined with the oil seals having small rolling resistance and are free from maintenance.
The preload of the bearings can be determined only by tightening the axle hub nut to a specified torque, improving serviceability.

SA

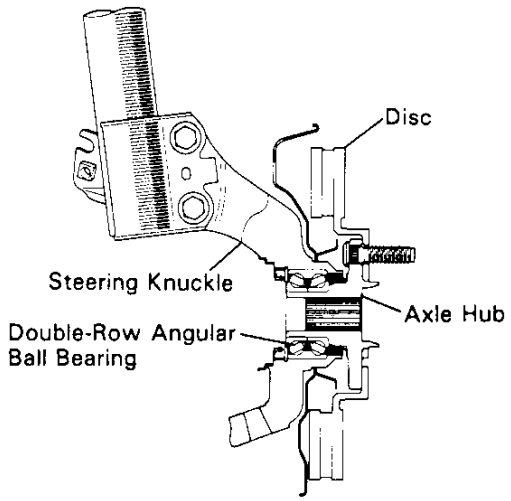

R09614

Downloaded from www.Manualslib.com manuals search engine

PREPARATION

8A01U-04

SST (SPECIAL SERVICE TOOLS)

	09308-00010 Oil Seal Puller	
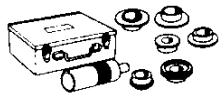	09316-60010 Transmission & Transfer Bearing Replacer	Dust deflector installation
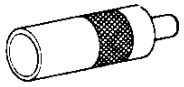	(09316-00010) Replacer Pipe	
	(09316-00040) Replacer "C"	
	09520-00031 Rear Axle Shaft Puller	
	09527-17011 Rear Axle Shaft Bearing Remover	
	09608-12010 Front Hub & Drive Pinion Bearing Replacer Set	
	(09608-00020) Remover & Replacer Handle	
	(09608-00040) Replacer	
	(09608-00060) Drive Pinion Front Bearing Cup Replacer	
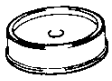	09608-32010 Steering Knuckle Oil Seal Replacer	Bearing installation Axle hub installation Dust deflector installation
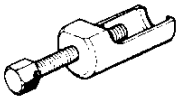	09610-20012 Pitman Arm Puller	

SA

Downloaded from www.Manualslib.com manuals search engine

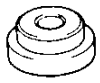	09620−30010 (09625−30010)	Steering Gear Box Replacer Set Steering Main Shaft Bearing Replacer	
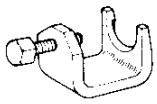	09628−10011	Ball Joint Puller	Hub bolt removal
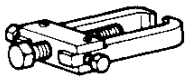	09628−62011	Ball Joint Puller	
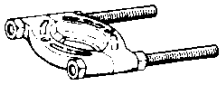	09950−00020	Bearing Remover	

SA

SA01V−03

RECOMMENDED TOOLS

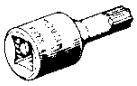	09042−00010	Torx Socket T30	
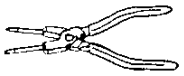	09905−00013	Snap Ring Pliers	

SA01W−01

EQUIPMENT

Dial indicator	
Torque wrench	

Downloaded from www.Manualslib.com manuals search engine

FRONT AXLE HUB
COMPONENTS

SA01X-08

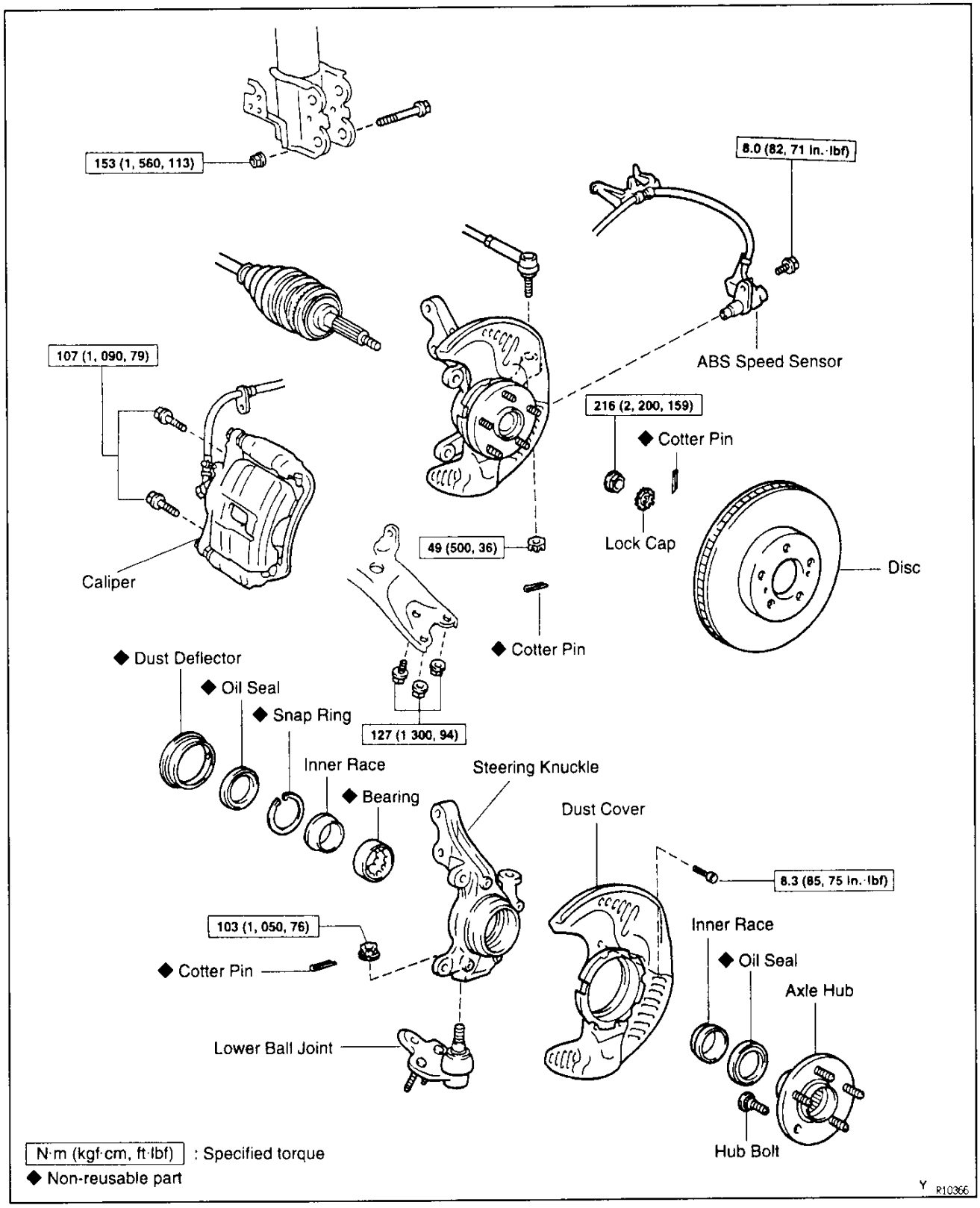

SA

Downloaded from www.Manualslib.com manuals search engine

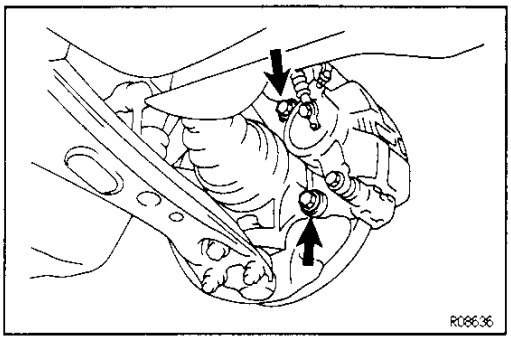

STEERING KNUCKLE WITH AXLE HUB REMOVAL

SA18L-02

1. JACK UP VEHICLE AND REMOVE FRONT WHEEL

2. CHECK BEARING BACKLASH AND AXLE HUB DEVIATION

(a) Remove the 2 caliper set bolts.

(b) Suspend the brake caliper securely.

(c) Remove the disc.

(d) Place the dial indicator near the center of the axle hub and check the backlash in the bearing shaft direction.

Maximum:

0.05 mm (0.0020 in.)

If greater than the specified maximum, replace the bearing.

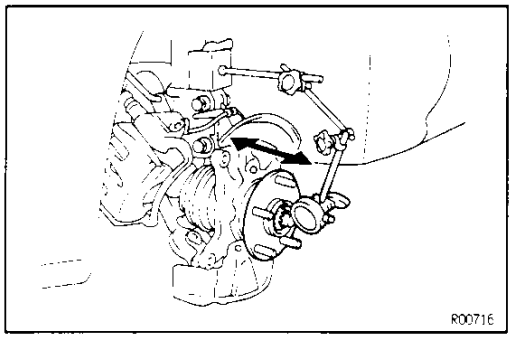

SA

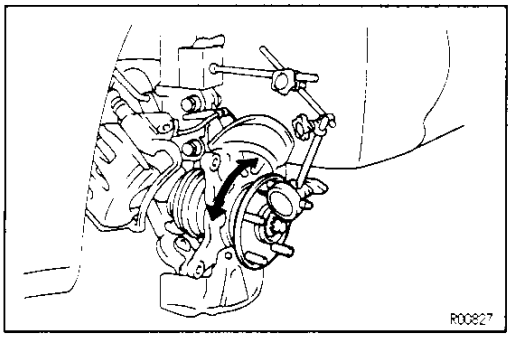

(e) Using a dial indicator, check the deviation at the surface of the axle hub outside the hub bolt.

Maximum:

0.05 mm (0.0020 in.)

If greater than the specified maximum, replace the axle hub.

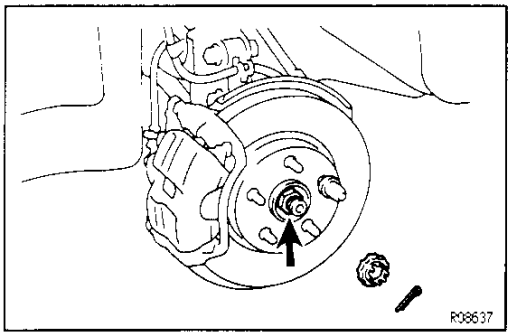

3. REMOVE DRIVE SHAFT LOCK NUT

(a) Install the disc and caliper.

(b) Remove the cotter pin and lock cap.

(c) While applying the brakes, remove the nut.

(d) Remove the caliper and disc.

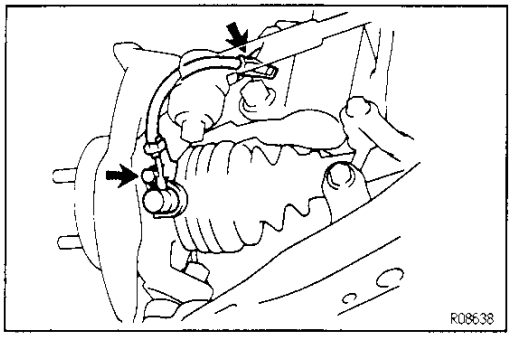

4. w/ ABS:

REMOVE ABS SPEED SENSOR

Remove the ABS speed sensor set bolt and clamp.

Downloaded from www.Manualslib.com manuals search engine

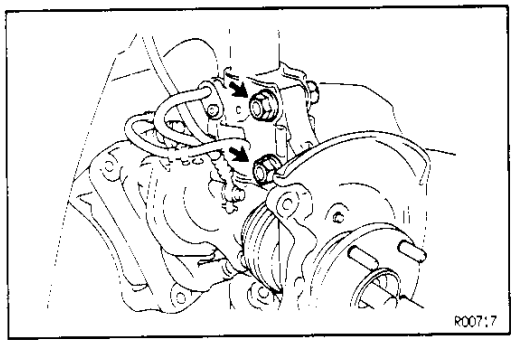

5. LOOSEN NUTS ON LOWER SIDE OF SHOCK ABSORBER

HINT: Do not remove the bolts.

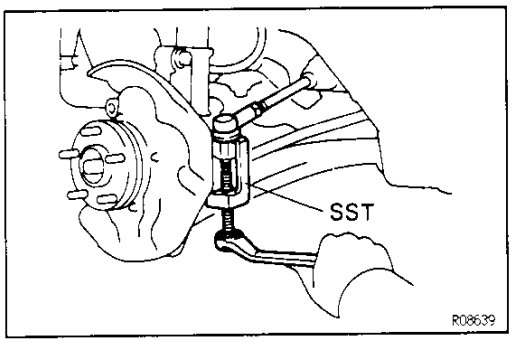

6. DISCONNECT TIE ROD END FROM STEERING KNUCKLE

(a) Remove the cotter pin and remove the nut.

(b) Using SST, disconnect the tie rod end from the steering knuckle.

SST 09610–20012

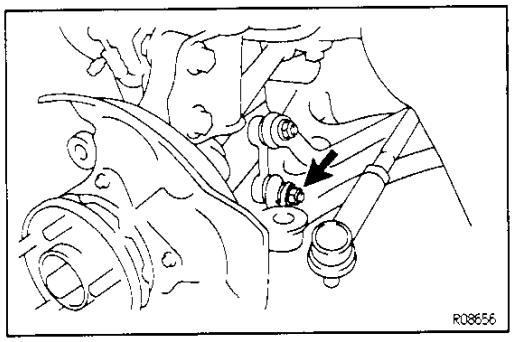

7. DISCONNECT STABILIZER BAR LINK FROM LOWER SUSPENSION ARM

Remove the nut.

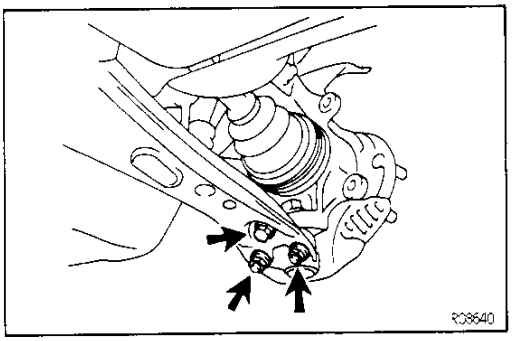

8. DISCONNECT LOWER BALL JOINT FROM LOWER ARM

Remove the bolt and the 2 nuts.

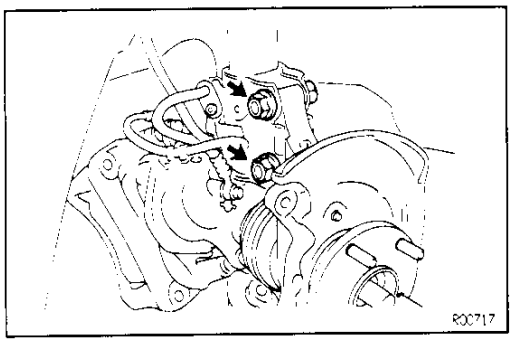

9. REMOVE STEERING KNUCKLE WITH AXLE HUB

(a) Remove the 2 nuts and bolts on lower side of the shock absorber.

Downloaded from www.Manualslib.com manuals search engine

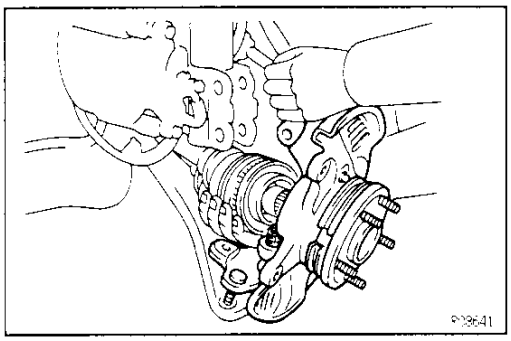

(b) Remove the steering knuckle with axle hub.

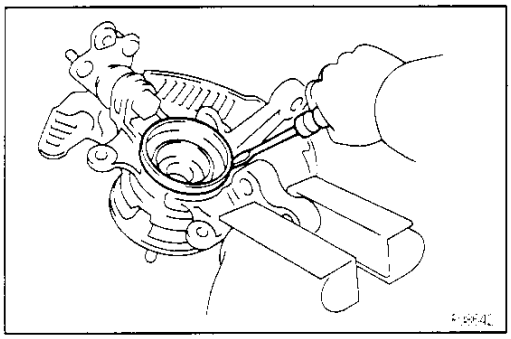

SA

FRONT AXLE HUB DISASSEMBLY

SA0DZ-03

1. REMOVE DUST DEFLECTOR

Using a screwdriver, remove the dust deflector.

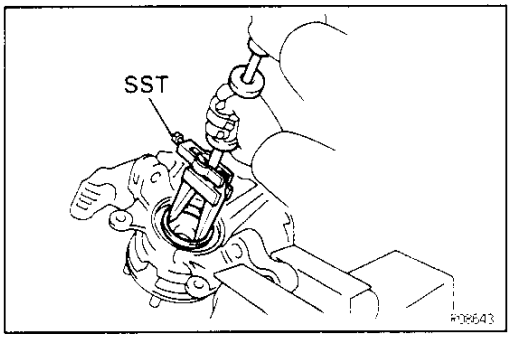

2. REMOVE OIL SEAL

Using SST, remove the inner oil seal.
SST 09308–00010

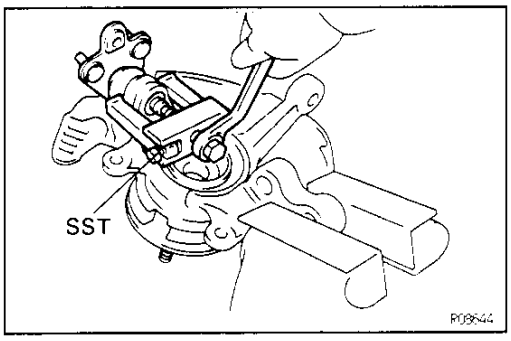

3. REMOVE LOWER BALL JOINT

(a) Remove the cotter pin and nut.
(b) Using SST, remove the lower ball joint.
SST 09628–62011

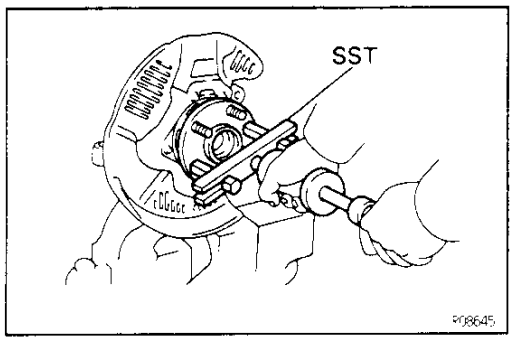

4. REMOVE AXLE HUB

(a) Using SST, remove the axle hub.
SST 09520–00031

Downloaded from www.Manualslib.com manuals search engine

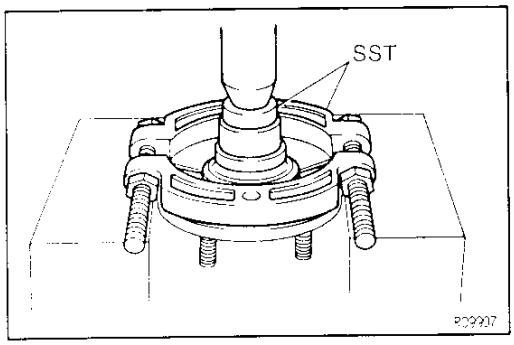

(b) Using SST and a press, remove the inner race (outside) from the axle hub.
SST 09620–30010 (09625–30010),
09950–00020

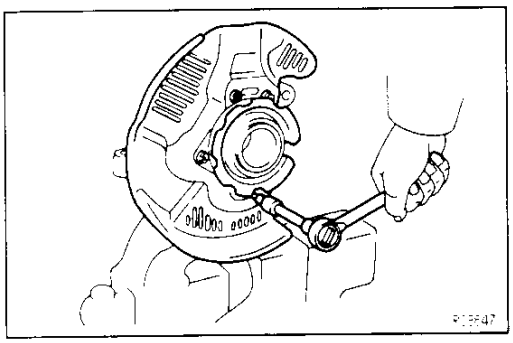

5. REMOVE DUST COVER

Using a torx wrench, remove the 4 bolts and dust cover.
Torx wrench: T30 (Part NO. 09042–00010 or locally manufactured tool)

SA

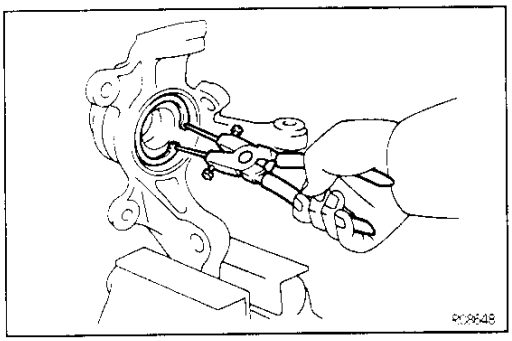

6. REMOVE SNAP RING

Using snap ring pliers, remove the snap ring.

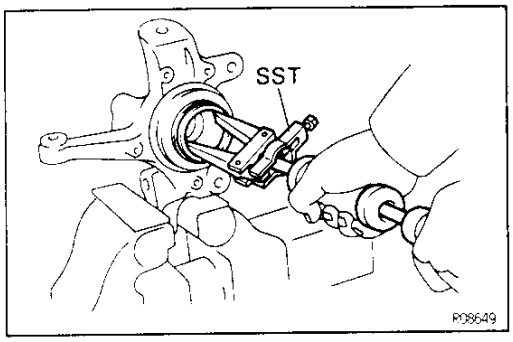

7. REMOVE OUTER OIL SEAL

Using SST, remove the outer oil seal.
SST 09308–00010

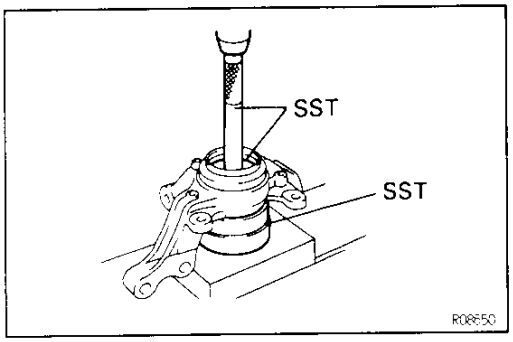

8. REMOVE BEARING FROM STEERING KNUCKLE

Using SST and a press, remove the bearing from the steering knuckle.
SST 09527–17011, 09608–12010 (09608–00020,
09608–00060)

Downloaded from www.Manualslib.com manuals search engine

SA020-06

FRONT AXLE HUB ASSEMBLY

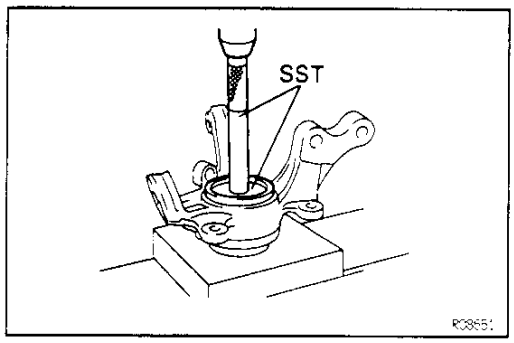

1. INSTALL NEW BEARING

(a) Using SST and a press, install a new bearing to the steering knuckle.
SST 09608–12010 (09608–00020), 09608–32010

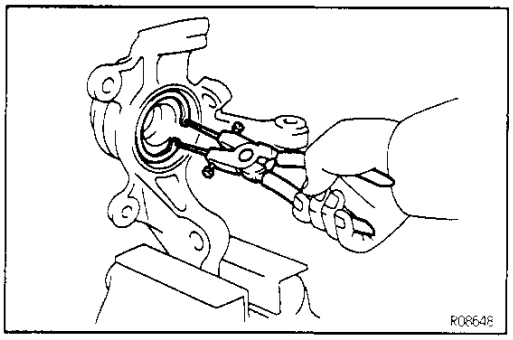

(b) Using snap ring pliers, install a new snap ring.

SA

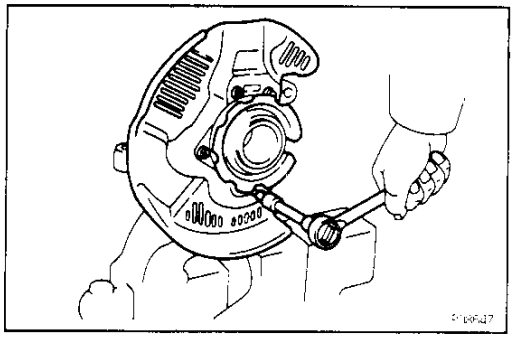

2. INSTALL DUST COVER

Using a torx wrench, install the dust cover with the 4 bolts.
Torx wrench: T30 (Part NO. 09042–00010 or locally manufactured tool)
Torque: 8.3 N·m (85 kgf·cm, 74 in.·lbf)

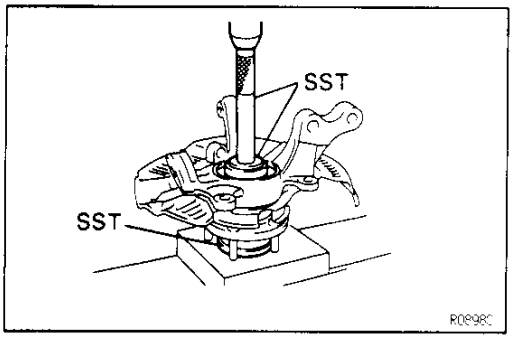

3. INSTALL FRONT AXLE HUB

Using SST and a press, install the axle hub.
SST 09608–12010 (09608–00020, 09608–00040), 09608–32010

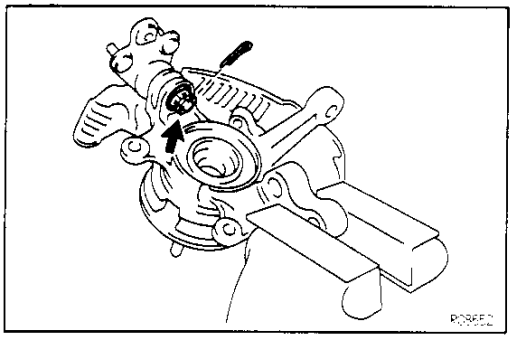

4. INSTALL LOWER BALL JOINT

(a) Install the lower ball joint and torque the nut.
Torque: 103 N·m (1,050 kgf·cm, 76 ft·lbf)

(b) Install a new cotter pin.

Downloaded from www.Manualslib.com manuals search engine

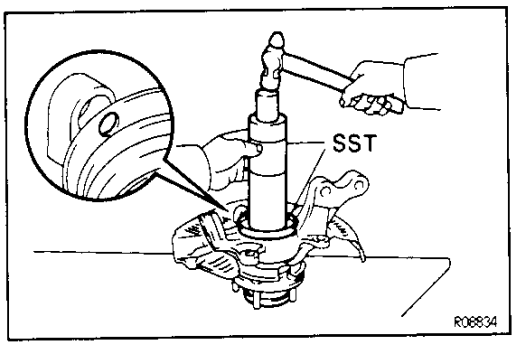

5. INSTALL NEW DUST DEFLECTOR

Using SST and a hammer, install a new dust deflector.
SST 09316–60010 (09316–00010, 09316–00040), 09608–32010
HINT: Align the holes for the ABS speed sensor in the dust deflector and steering knuckle.

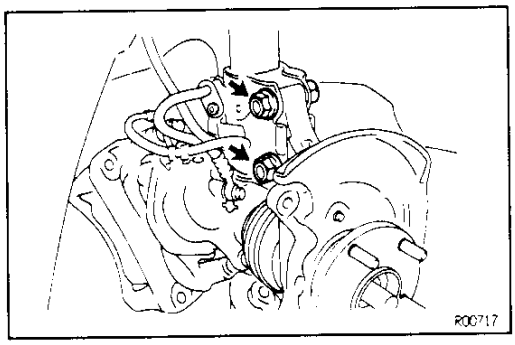

STEERING KNUCKLE WITH AXLE HUB INSTALLATION

1. INSTALL STEERING KNUCKLE

(a) Place the steering knuckle and temporarily install the 2 bolts and nuts on lower side of shock absorber.
HINT: Coat the threads of nuts with engine oil.

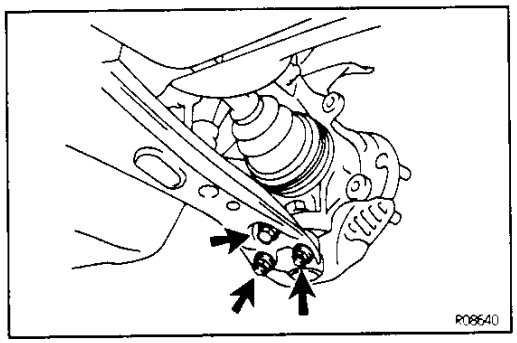

(b) Connect the lower arm to the lower ball joint and tighten the bolt and 2 nuts.
Torque: 127 N·m (1,300 kgf·cm, 94 ft·lbf)

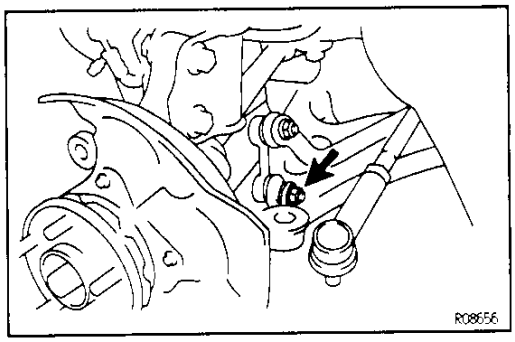

2. CONNECT STABILIZER BAR LINK

Connect the stabilizer bar link to the lower suspension arm and tighten the nut.
Torque: 44 N·m (450 kgf·cm, 33 ft·lbf)

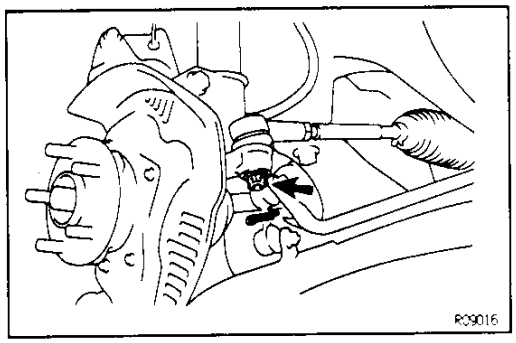

3. CONNECT TIE ROD END TO STEERING KNUCKLE

(a) Connect the tie rod end to the steering knuckle and tighten the nut.
Torque: 49 N·m (500 kgf·cm, 36 ft·lbf)

(b) Install a new cotter pin.

Downloaded from www.Manualslib.com manuals search engine

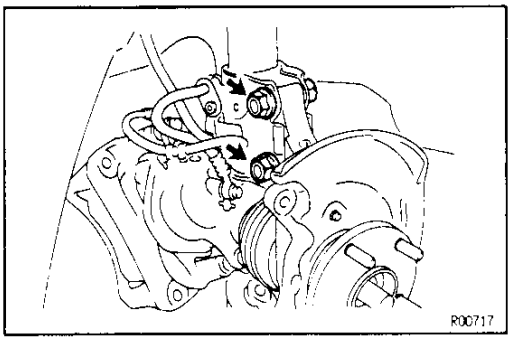

4. TORQUE BOLTS ON LOWER SIDE OF SHOCK ABSORBER
Torque: 153 N·m (1,560 kgf·cm, 113 ft·lbf)

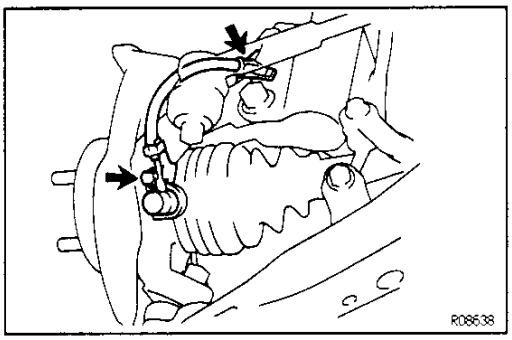

5. w/ ABS:
INSTALL ABS SPEED SENSOR
Install the clamp and torque the ABS speed sensor set bolt.
Torque: 8.0 N·m (82 kgf·cm, 71 in.·lbf)

SA

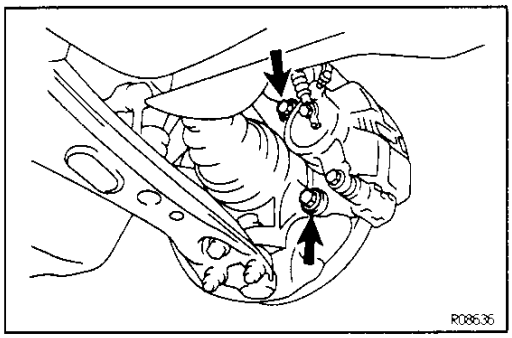

6. INSTALL DISC AND CALIPER
Install the disc and caliper.
Torque: 107 N·m (1,090 kgf·cm, 79 ft·lbf)

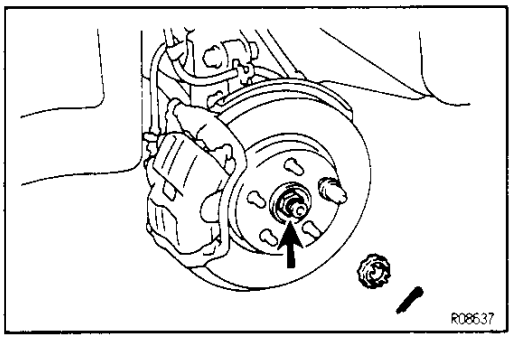

7. INSTALL DRIVE SHAFT LOCK NUT
(a) While applying the brakes, install the nut.
Torque: 216 N·m (2,200 kgf·cm, 159 ft·lbf)
(b) Install the lock cap and a new cotter pin.

8. INSTALL FRONT WHEEL AND LOWER VEHICLE
Torque: 103 N·m (1,050 kgf·cm, 76 ft·lbf)

9. INSPECT FRONT WHEEL ALIGNMENT
(See page SA−7)

10. w/ ABS:
INSPECT ABS SPEED SENSOR SIGNAL
(See page BR−93)

Downloaded from www.Manualslib.com manuals search engine

SA021-06

HUB BOLT REPLACEMENT

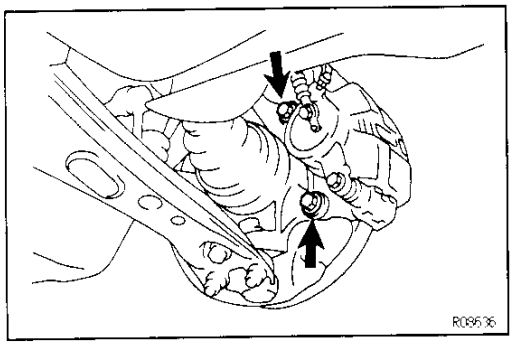

1. **JACK UP VEHICLE AND REMOVE FRONT WHEEL**
2. **REMOVE CALIPER AND DISC**

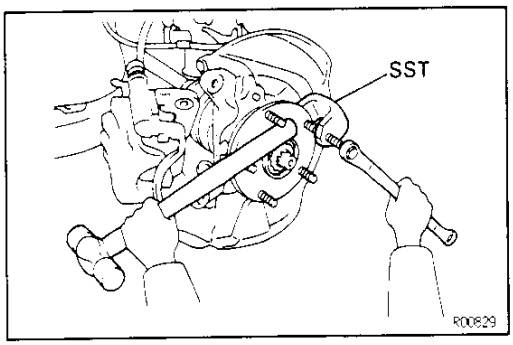

3. **REMOVE HUB BOLT**
   Using SST, remove the hub bolt.
   SST 09628–10011

SA

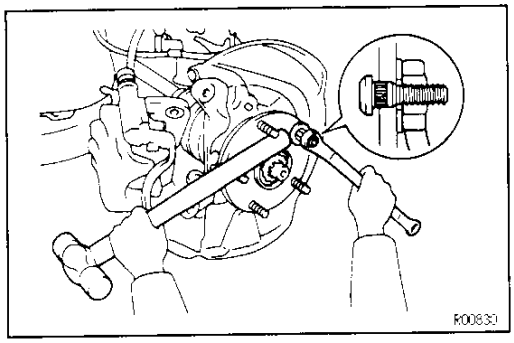

4. **INSTALL HUB BOLT**
   Install washer and nut to the hub bolt, as shown in the illustration, and install the hub bolt by torquing the nut.

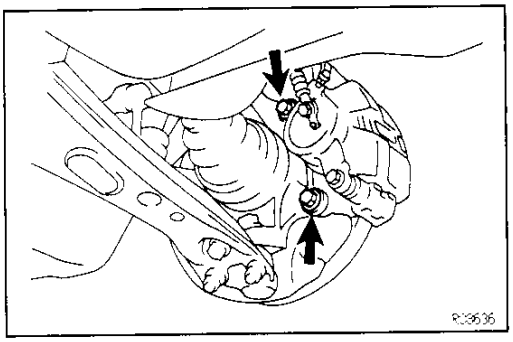

5. **INSTALL DISC AND CALIPER**
   Torque: 107 N·m (1,090 kgf·cm, 79 ft·lbf)
6. **INSTALL FRONT WHEEL AND LOWER VEHICLE**
   Torque: 103 N·m (1,050 kgf·cm, 76 ft·lbf)

Downloaded from www.Manualslib.com manuals search engine

FRONT DRIVE SHAFT (3S—GE)

DESCRIPTION

SA02D-08

The front drive shaft has a double—offset CVJ (Constant Velocity Joint) on the differential side and Rzeppa type CVJ on the wheel side.

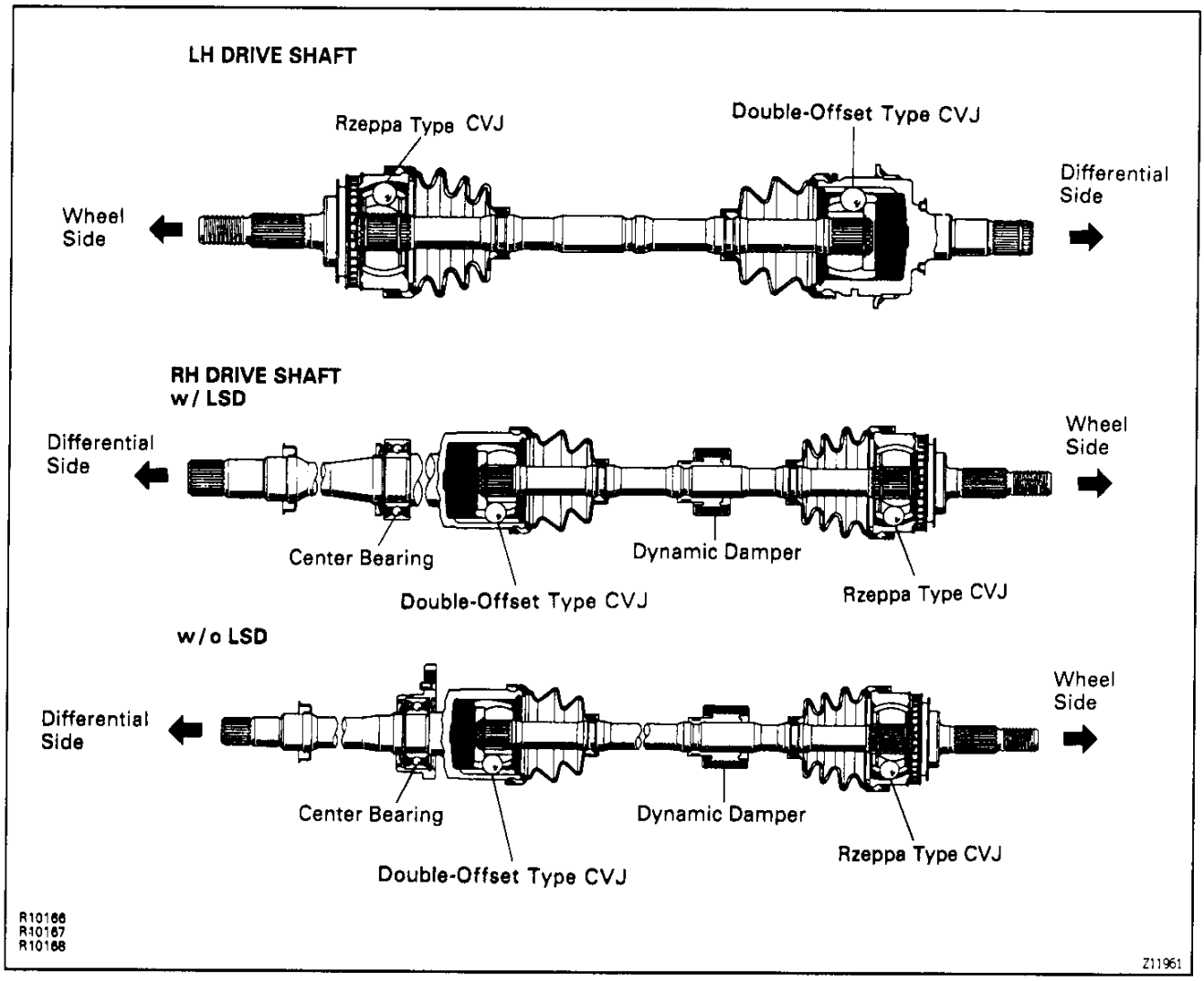

Downloaded from www.Manualslib.com manuals search engine

PREPARATION

SA02E-03

SST (SPECIAL SERVICE TOOLS)

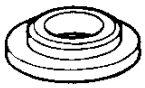	09506–35010	Differential Drive Pinion Rear Bearing Replacer	
	09608–12010	Front Hub & Drive Pinion Bearing Replacer Set	
	(09608–00020)	Remover & Replacer Handle	
	(09608–00060)	Drive Pinion Front Bearing Cup Replacer	
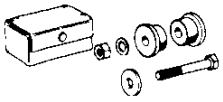	09608–16041	Front Hub Bearing Adjusting Tool	
	(09608–02020)	Bolt & Nut	
	(09608–02040)	Retainer	
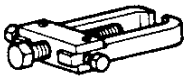	09628–62011	Ball Joint Puller	Tie rod end
	09710–30020	Suspension Bushing Tool Set	
	(09710–03140)	Lateral Rod Bushing Removing Base	
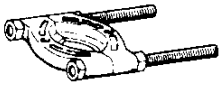	09950–00020	Bearing Remover	Center drive shaft dust cover

SA

Downloaded from www.Manualslib.com manuals search engine

RECOMMENDED TOOLS

SA02F-03

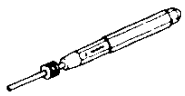	09031–00030 Pin Punch	
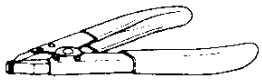	09905–00012 Snap Ring No. 1 Expander	For removing and installing snap ring

EQUIPMENT

SA02G-03

Torque wrench	

SA

LUBRICANT

SA02H-0F

Item		Capacity	Classification
Outboard joint grease	w/ LSD	104–116 g (3.6–4.0 oz.)	
	w/o LSD	100–120 g (3.5–4.2 oz.)	
Inboard joint grease	w/ LSD	104–116 g (3.6–4.0 oz.)	
	w/o LSD	100–120 g (3.5–4.2 oz.)	

Downloaded from www.Manualslib.com manuals search engine

FRONT DRIVE SHAFT
COMPONENTS

SA03J-04

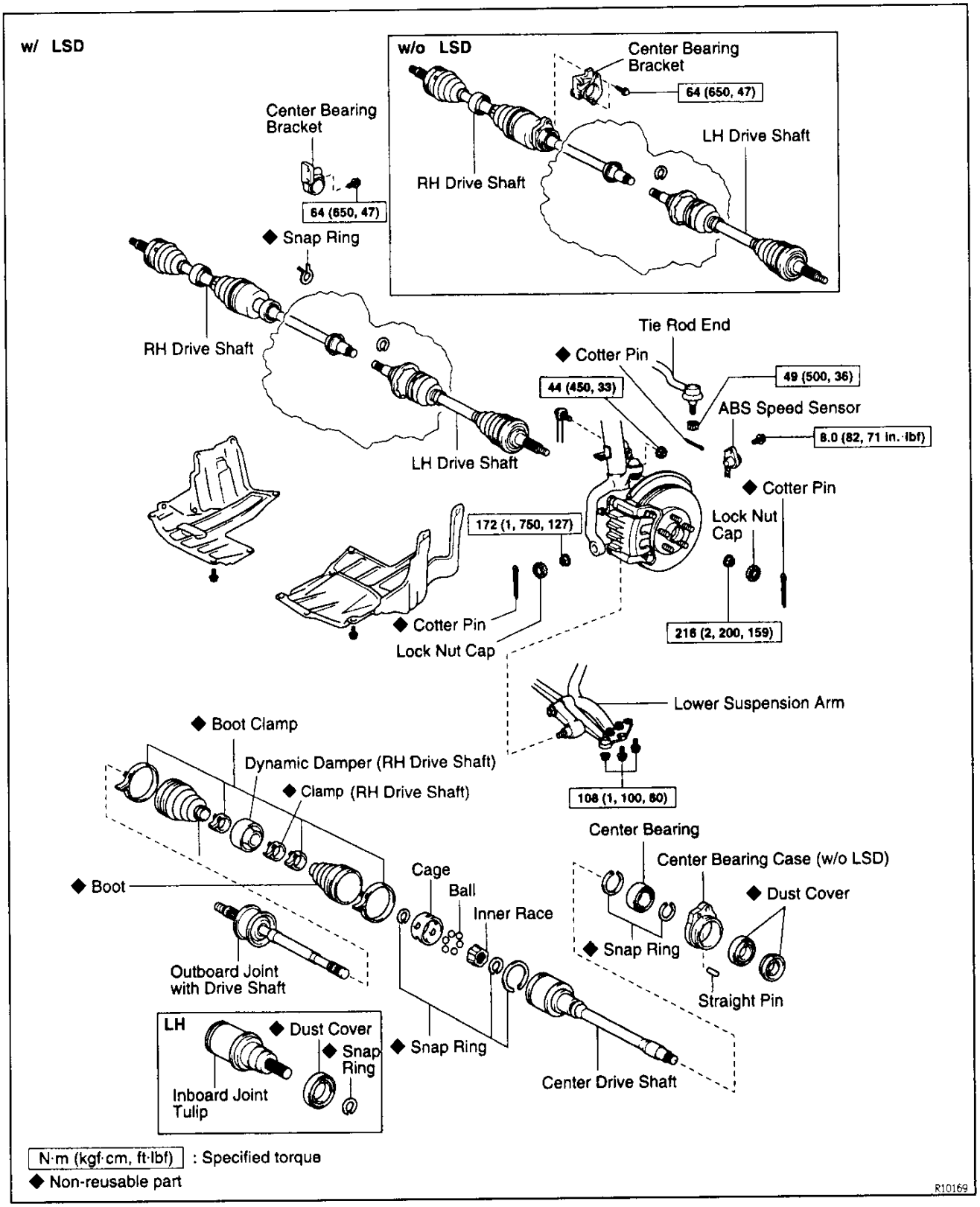

SA

Downloaded from www.Manualslib.com manuals search engine

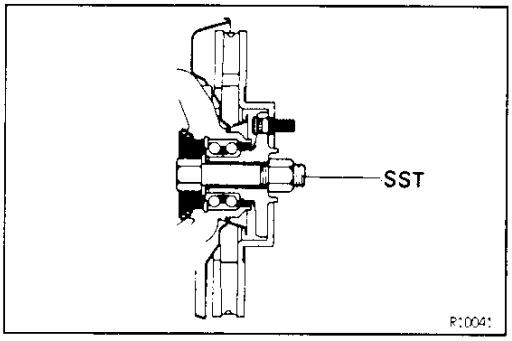

FRONT DRIVE SHAFT REMOVAL

SA1DC-01

NOTICE: The hub bearing could be damaged if it is subjected to the vehicle weight, such as when moving the vehicle with the drive shaft removed. Therefore, if it is absolutely necessary to place the vehicle weight on the hub bearing, first support it with SST.
SST 09608—16041 (09608—02020,09608—02040)

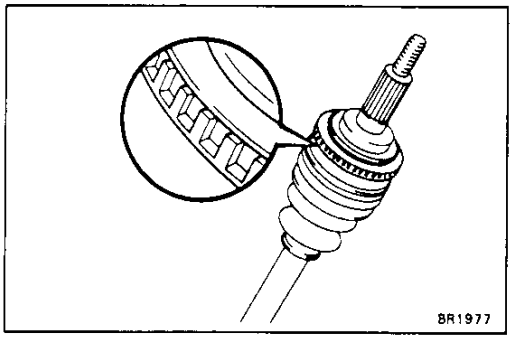

w/ABS:
After disconnecting the drive shaft from the axle hub, work carefully so as not to damage the sensor rotor serrations on the drive shaft.

SA

1. **JACK UP VEHICLE AND REMOVE FRONT WHEEL**
2. **REMOVE ENGINE UNDER COVERS**
3. **DRAIN TRANSAXLE OIL**

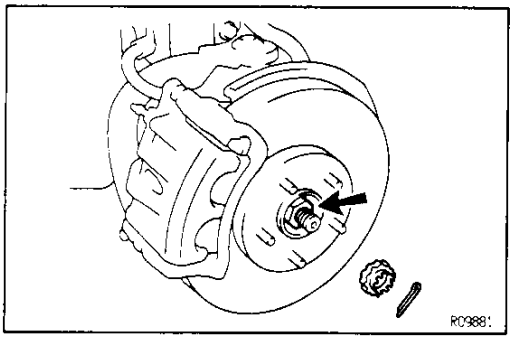

4. **REMOVE COTTER PIN, LOCK NUT CAP AND LOCK NUT**
(a) Remove the cotter pin and lock nut cap.
(b) Loosen the bearing lock nut while depressing the brake pedal.

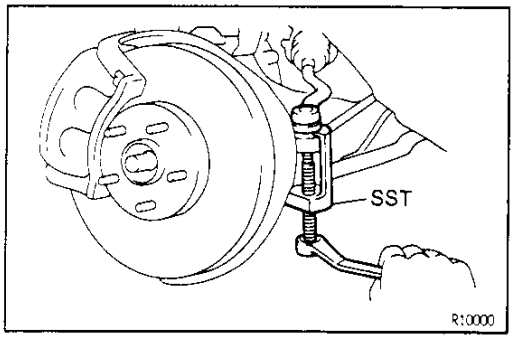

5. **DISCONNECT TIE ROD END**
(a) Remove the cotter pin and nut from the steering knuckle.
(b) Using SST, disconnect the tie rod end from the steering knuckle.
SST 09628—62011

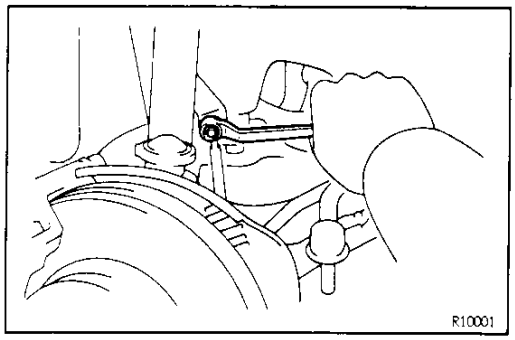

6. **DISCONNECT STABILIZER BAR LINK**
Remove the nut and disconnect the stabilizer bar link from shock absorber.
HINT: If the ball joint stud turns together with the nut, use a haxagon wrench to hold the stud.

Downloaded from www.Manualslib.com manuals search engine

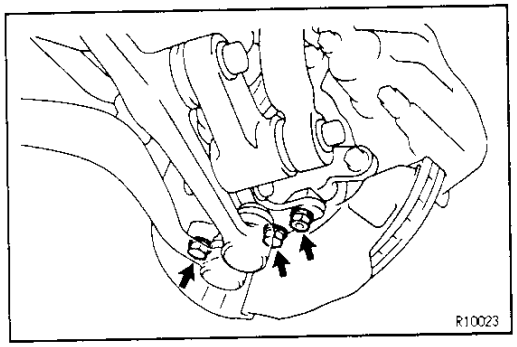

7. DISCONNECT LOWER BALL JOINT ATTACHMENT

Remove the nut and 2 bolts and disconnect the lower ball joint attachment from steering knuckle.

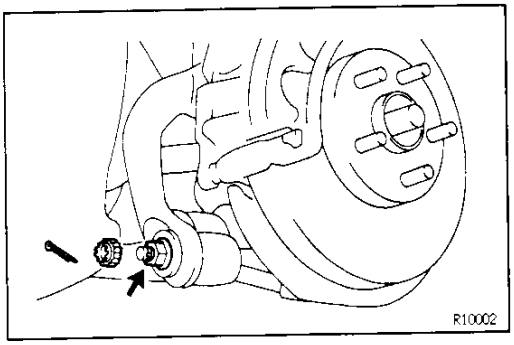

8. DISCONNECT CAMBER CONTROL ARM

(a) Remove the cotter pin and lock cap, remove the nut.

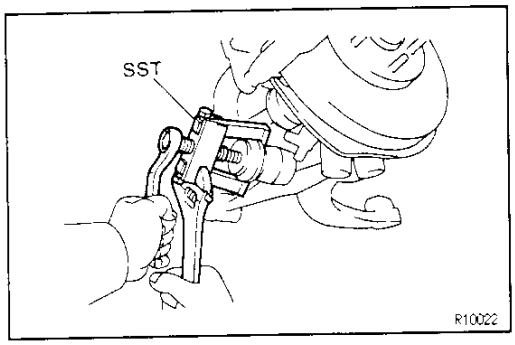

(b) Using SST, disconnect the camber control arm from shock absorber.
SST 09628–62011

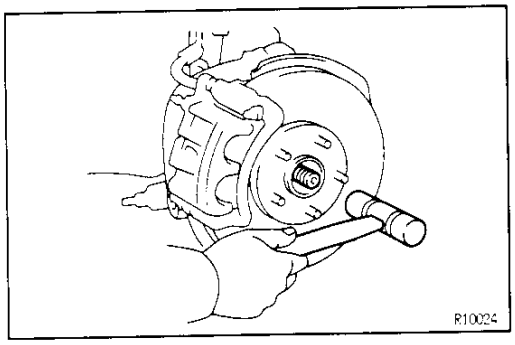

9. DISCONNECT DRIVE SHAFT

Using a plastic hammer, disconnect the drive shaft from axle hub.

NOTICE: Cover the drive shaft boot with cloth to protect it from damage.

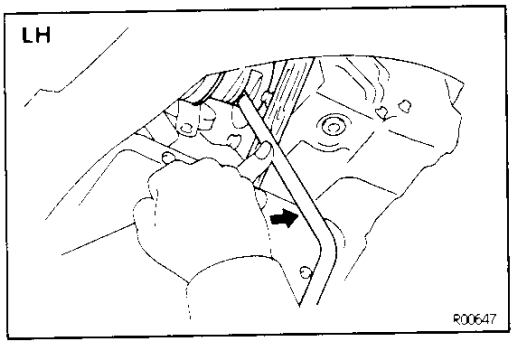

10. REMOVE LH DRIVE SHAFT

(a) Using hub nut wrench and hammer handle or an equivalent, pull out the drive shaft, as shown.

Downloaded from www.Manualslib.com manuals search engine

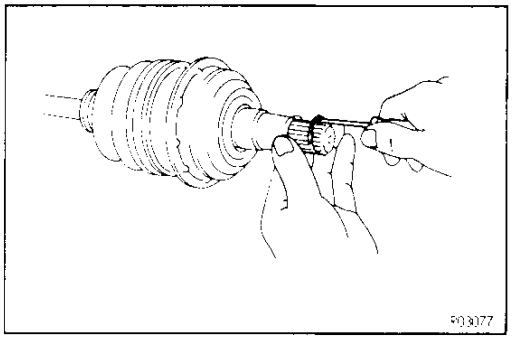

(b) Using a screwdriver, remove the snap ring.

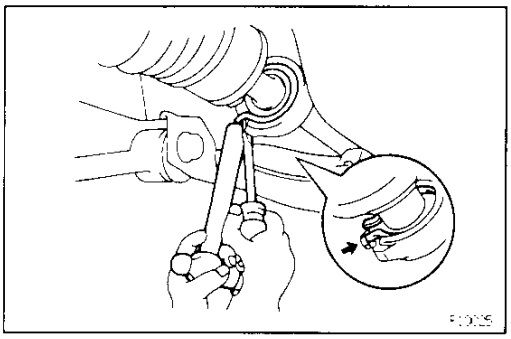

SA

11. REMOVE RH DRIVE SHAFT

(a) w/ LSD:
Using a hammer and a screwdriver, remove the snap ring from the bearing bracket.

(b) Remove the bolt from the bearing bracket.

(c) Remove the RH drive shaft with center drive shaft.
NOTICE: Be careful not to damage the differential side oil seal.
HINT: If it is hard to remove the bearing, use a brass bar and a hammer and the drive flange end of the drive shaft.

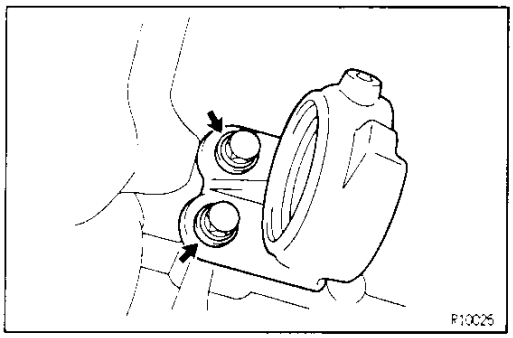

(d) Remove the 2 bolts and bearing bracket.

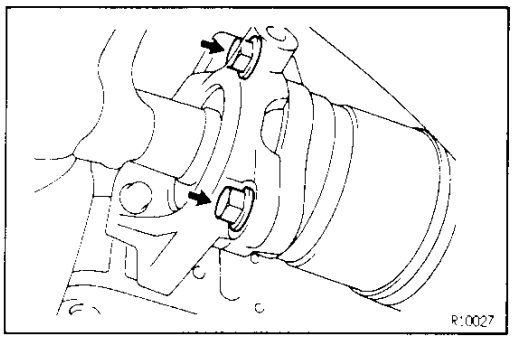

(a) w/o LSD:
Remove the 2 bolts of the center bearing bracket, and pull out the RH drive shaft together with the center bearing case and center drive shaft.

Downloaded from www.Manualslib.com manuals search engine

SA100-01

FRONT DRIVE SHAFT DISASSEMBLY

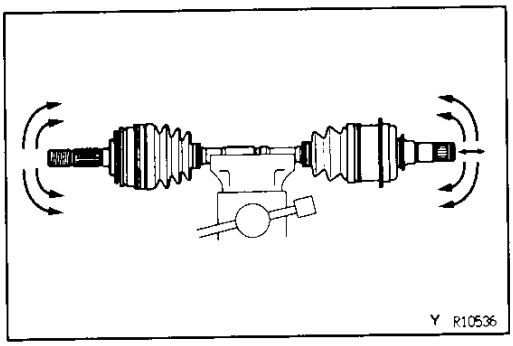

1. CHECK DRIVE SHAFT

(a) Check to see that there is no play in the outboard joint.

(b) Check to see that the inboard joint slides smoothly in the thrust direction.

(c) Check to see that there is no noticeable play in the radial direction of the inboard joint.

(d) Check for damage to boots.

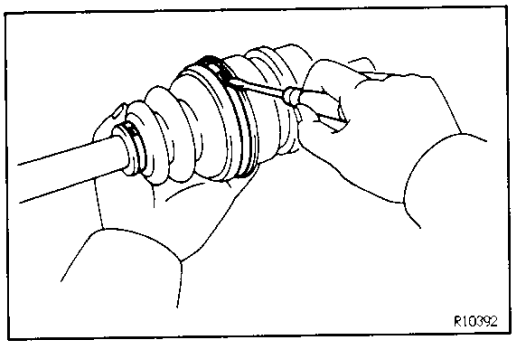

2. REMOVE INBOARD JOINT BOOT CLAMPS

(a) Using a screwdriver, remove the 2 boot clamps.

(b) Slide the inboard joint boot toward joint.

SA

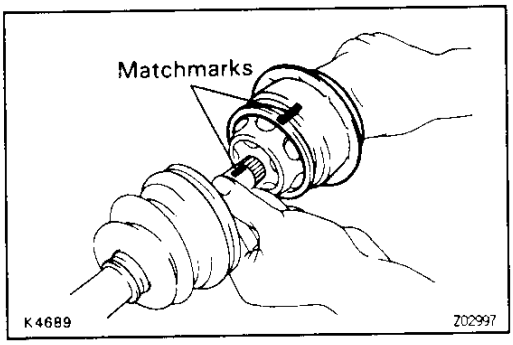

3. DISASSEMBLE INBOARD JOINT TULIP

Place matchmarks on the drive shaft and inboard joint tulip or center drive shaft.

NOTICE: Do not punch the marks.

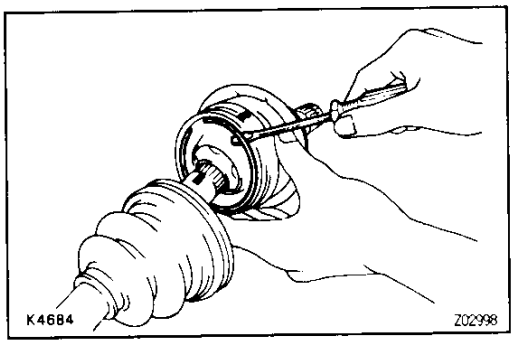

4. REMOVE SNAP RING

(a) Using a screwdriver, remove the snap ring.

(b) Remove inboard joint tulip from drive shaft.

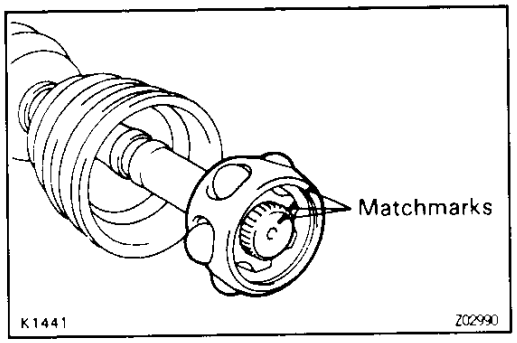

5. DISASSEMBLE INBOARD JOINT

(a) Place the matchmarks on the drive shaft, inner race and cage.

(b) Remove the 6 balls and cage.

Downloaded from www.Manualslib.com manuals search engine

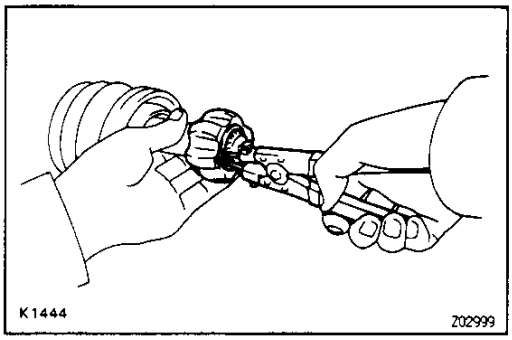

(c) Using a snap ring expander, remove the snap ring.

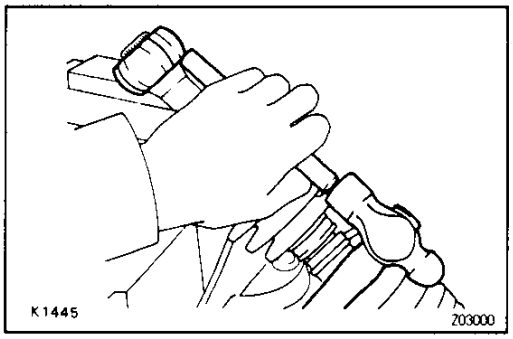

(d) Using a brass bar and hammer, remove the inner race.

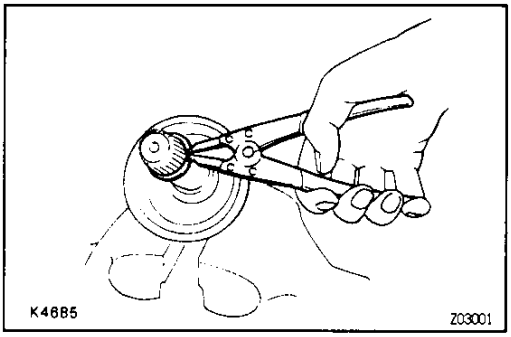

6. REMOVE SNAP RING

(a) Using a snap ring expander, remove the snap ring.

7. REMOVE INBOARD JOINT BOOT

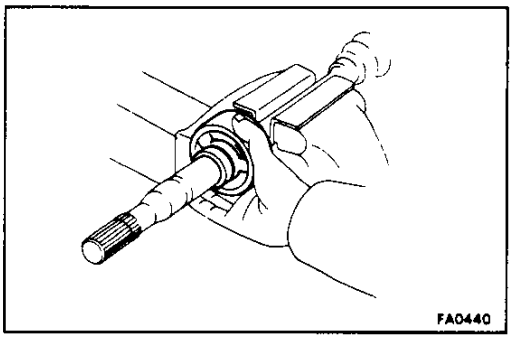

8. RH Drive shaft:
REMOVE DYNAMIC DAMPER

(a) Using a screwdriver, remove the clamp of the dynamic damper.

(b) Remove the dynamic damper.

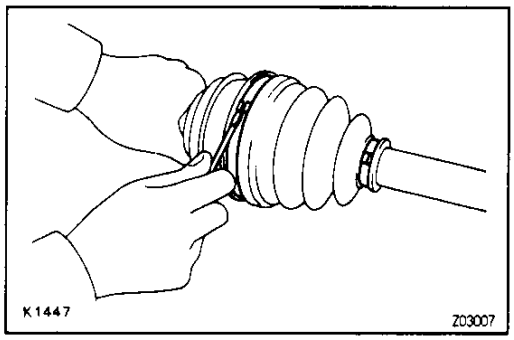

9. REMOVE OUTBOARD JOINT BOOT

(a) Using a screwdriver, remove the 2 boot clamps.

(b) Remove the outboard joint boot toward the inboard joint.

Downloaded from www.Manualslib.com manuals search engine

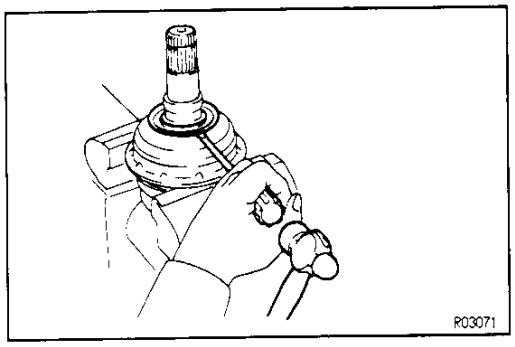

10. REMOVE DUST COVER

LH Drive shaft

Using a screwdriver, remove the dust cover from inboard joint tulip.

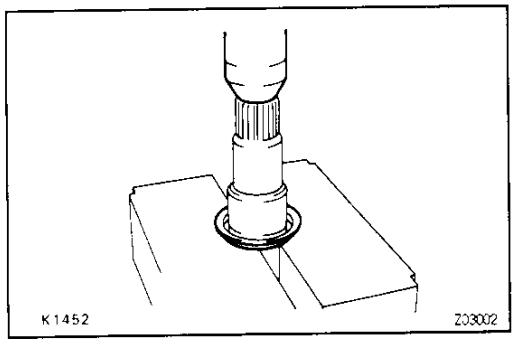

11. REMOVE DUST COVER

RH Drive shaft

Using a press, press out the dust cover from the center drive shaft.

SA

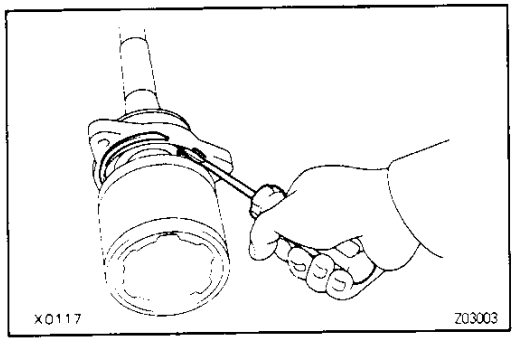

12. w/o LSD:

REMOVE SNAP RING

(a) Using a screwdriver, remove the snap ring.

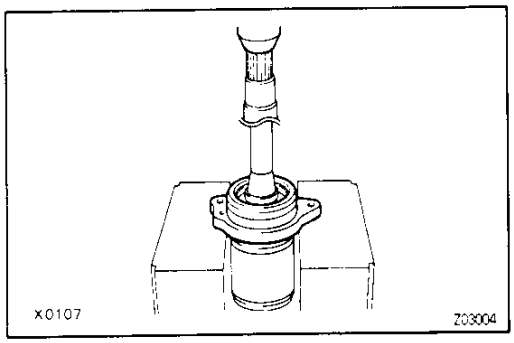

(b) Using a press, press out the bearing case.

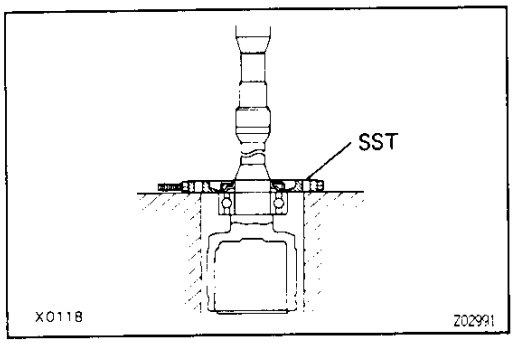

13. REMOVE DUST COVER

Using SST and a press, press out the dust cover.

SST 09950–00020

Downloaded from www.Manualslib.com manuals search engine

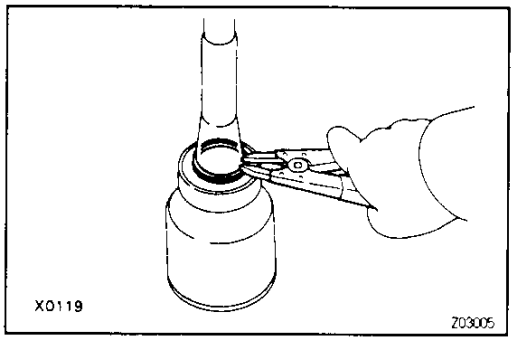

14. REMOVE BEARING

(a) Using a snap ring expander, remove the snap ring.

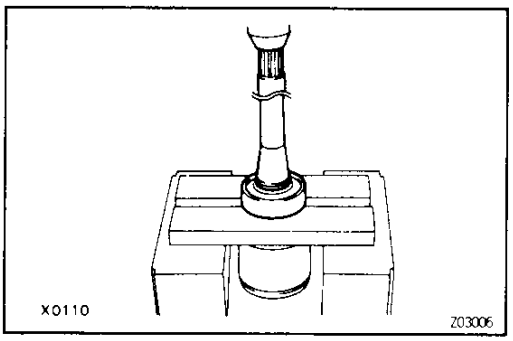

(b) Using a press, press out the bearing.

(c) Remove the snap ring.

SA

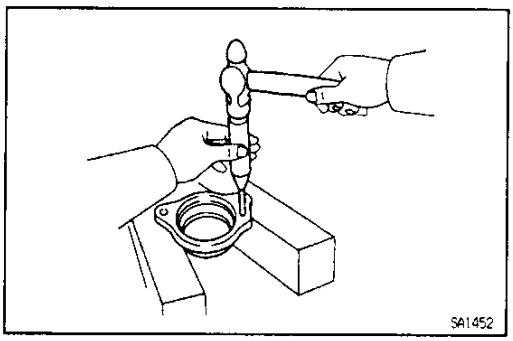

15. w/o LSD:
REMOVE STRAIGHT PIN

Using a pin punch and a hammer, tap out straight pin.

FRONT DRIVE SHAFT ASSEMBLY

SA1DE-01

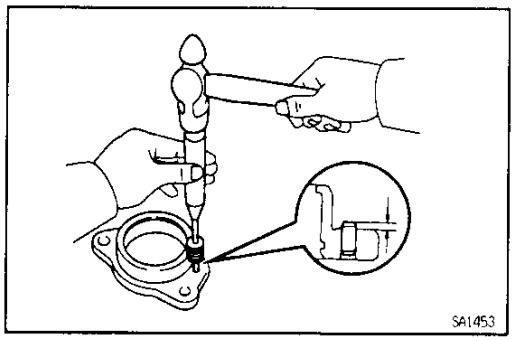

1. w/o LSD:
INSTALL STRAIGHT PIN

(a) Install the straight pin into the bearing case.

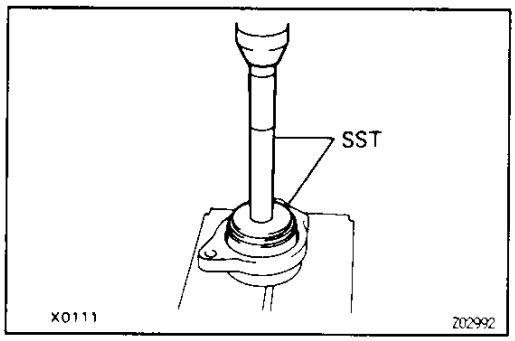

(b) Using SST and a press, press the new bearing into the bearing case.
SST 09608–12010 (09608–00020, 09608–00060)

Downloaded from www.Manualslib.com manuals search engine

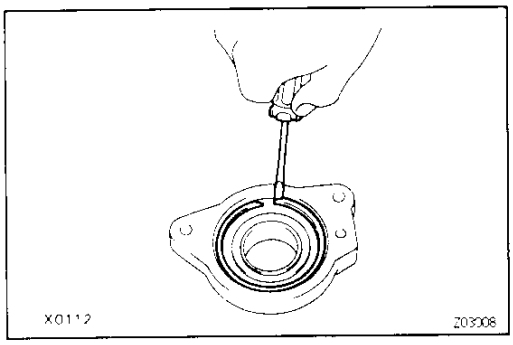

2. **w/o LSD:**
INSTALL SNAP RING
Using a screwdriver, install a new snap ring.

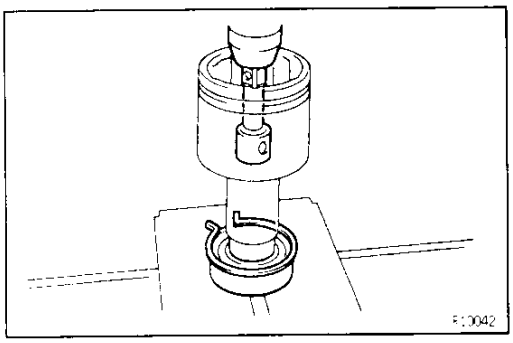

3. **w/ LSD:**
INSTALL BEARING
(a) Install the new snap ring.
(b) Using a press, install the bearing.

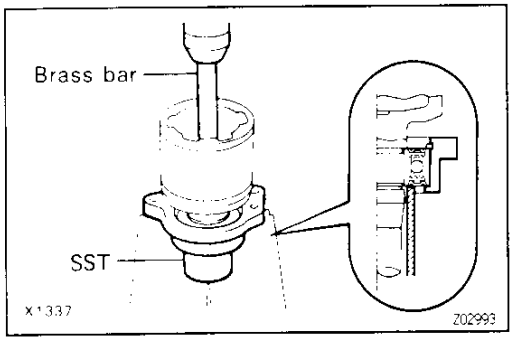

4. **w/o LSD:**
INSTALL BEARING CASE
Using SST and a press, install the bearing case assembly to the center drive shaft.
SST 09710–30020 (09710–03140)

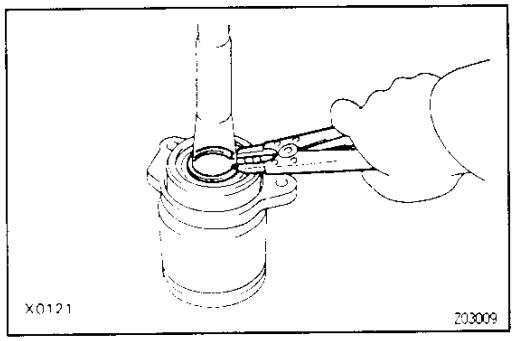

5. **INSTALL SNAP RING**
Using a snap ring expander,install a new snap ring.

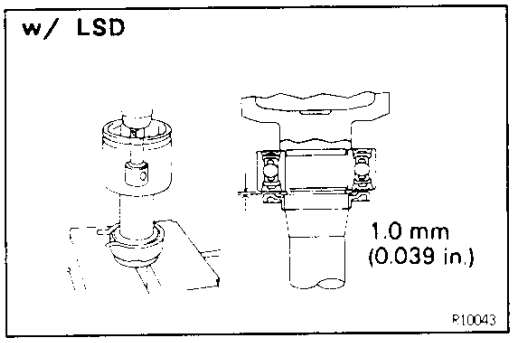

6. **INSTALL DUST COVER**
Using SST and a press, press into a new dust cover.
SST 09506–35010
HINT: The clearance between the dust cover and the bearing should be kept in the ranges shown in the illustration.

Downloaded from www.Manualslib.com manuals search engine

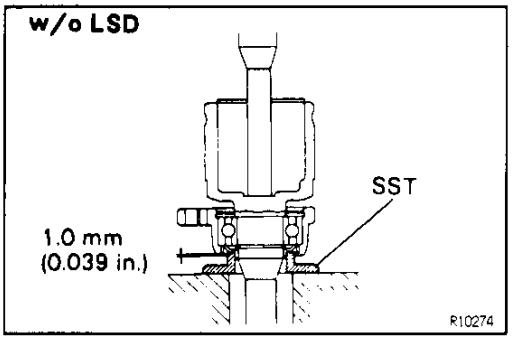

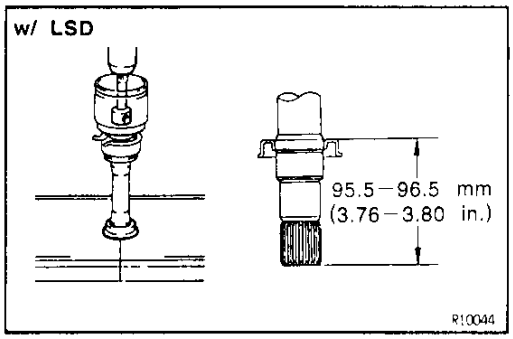

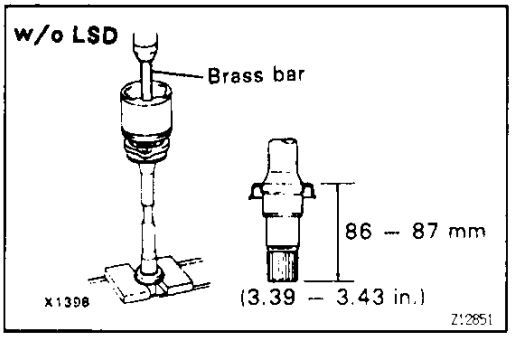

7. **INSTALL DUST COVER**
Using a steel plate and press, press in a new dust cover until the distance from the tip of the center drive reaches the specification, as shown in the illustration.

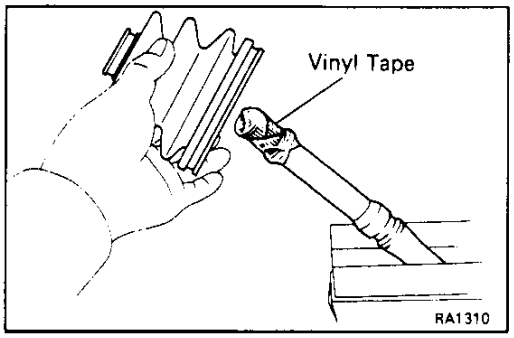

8. **TEMPORARILY INSTALL BOOTS AND DAMPER**
HINT: Before installing the boot, wrap vinyl tape around the spline of the drive shaft to prevent damaging the boots and damper.

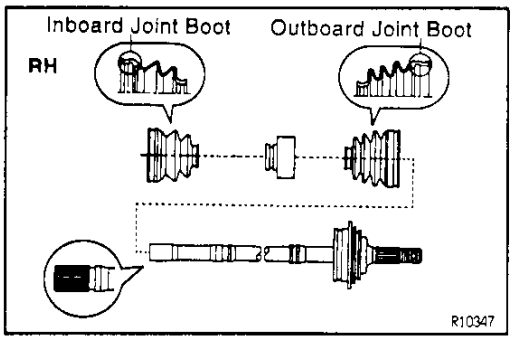

(a) Temporarily install a new outboard boot to the drive shaft.
(b) w/ Dynamic damper:
Temporarily install the dynamic damper to the drive shaft.
(c) Temporarily install a new inboard joint boot to the drive shaft.

Downloaded from www.Manualslib.com manuals search engine

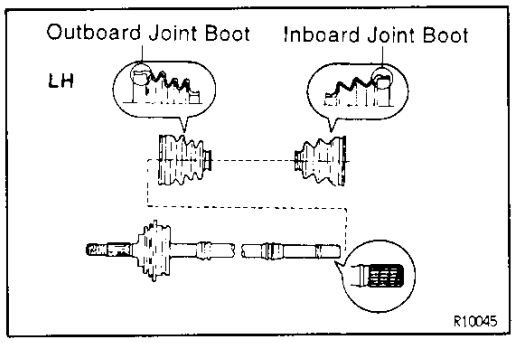

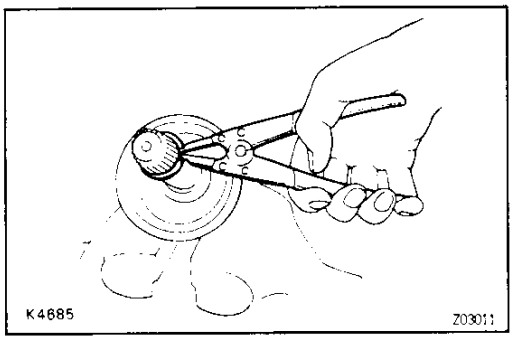

9. INSTALL SNAP RING

Using a snap ring expander, install a new snap ring.

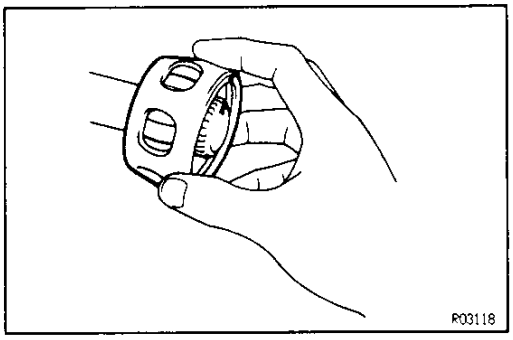

10. INSTALL CAGE

NOTICE: The side with smaller diameter must face outboard.

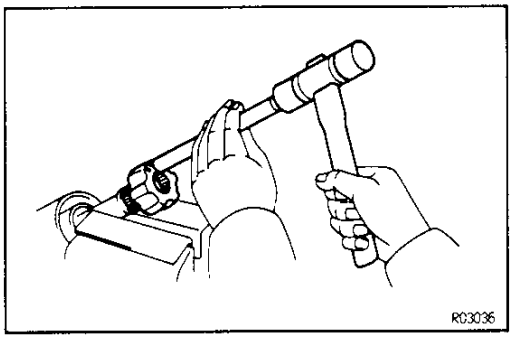

(a) Align the matchmarks placed before remove.

(b) Using a brass bar and hammer, tap in the inner race to the center drive shaft.

NOTICE: Be careful not to damage the inner race.

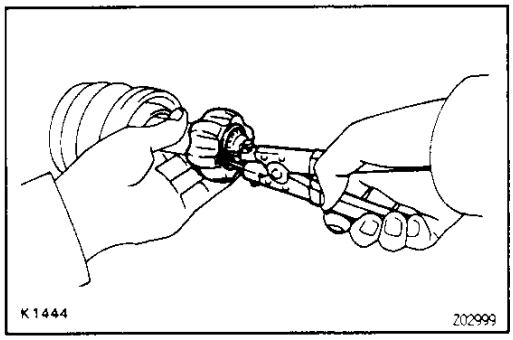

(c) Using a snap ring expander, install a new snap ring.

Downloaded from www.Manualslib.com manuals search engine

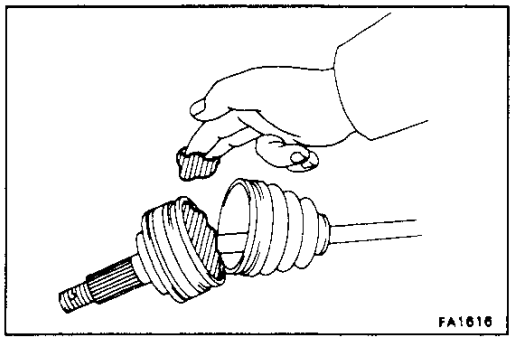

11. INSTALL BOOT TO OUTBOARD JOINT

Before assembling the boot, fill grease into the outboard joint and boot.

HINT: Use the grease supplied in the boot kit.

Grease capacity:

w/ LSD:

104–116 g (3.6–4.0 oz.)

w/o LSD:

100–120 g (3.5–4.2 oz.)

Grease color:

Black

SA

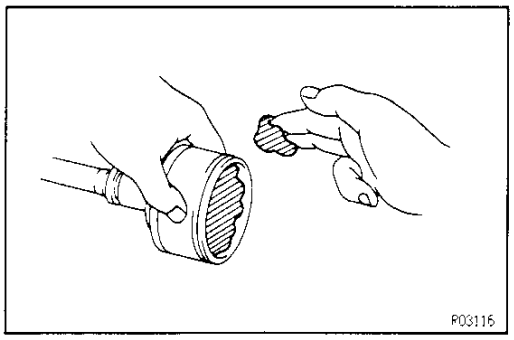

12. INSTALL INBOARD JOINT TULIP TO FRONT DRIVE SHAFT

Pack in the grease to the boot and inboard joint tulip.

HINT: Use the grease supplied in the boot kit.

Grease capacity:

w/ LSD:

104–116 g (3.6–4.0 oz.)

w/o LSD:

100–120 g (3.5–4.2 oz.)

Grease color:

Yellow ocher

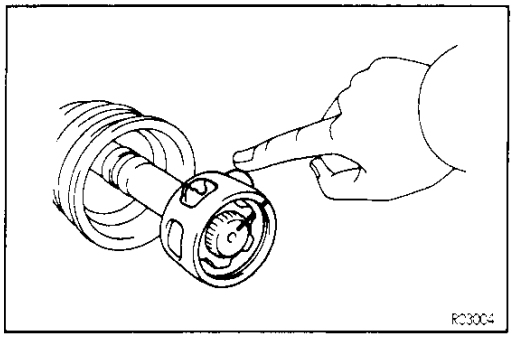

13. INSTALL CAGE

(a) Align the matchmarks placed before assembly.

(b) Install the cage to the inner race.

(c) Install the 6 balls.

HINT: Apply grease onto the balls to keep them from falling.

Downloaded from www.Manualslib.com manuals search engine

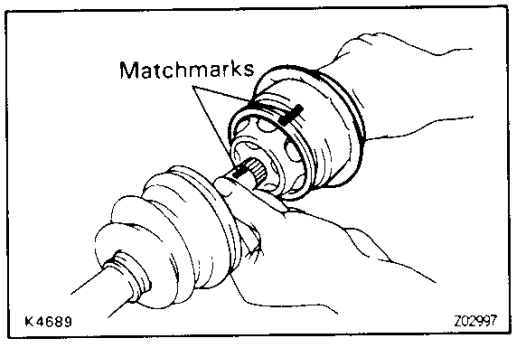

14. INSTALL INBOARD JOINT TULIP

(a) Align the matchmarks placed before assembly.

(b) Install the inboard joint tulip or center drive shaft to the drive shaft.

(c) Temporarily install the boot to the inboard joint tulip.

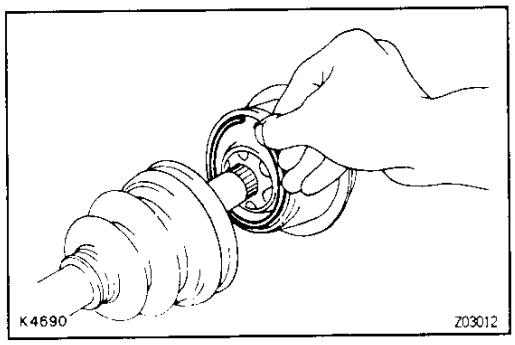

15. INSTALL SNAP RING

Install a new snap ring.

SA

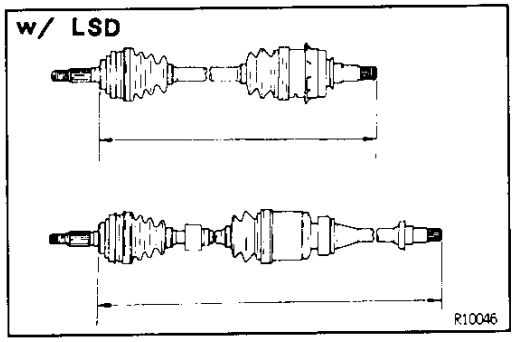

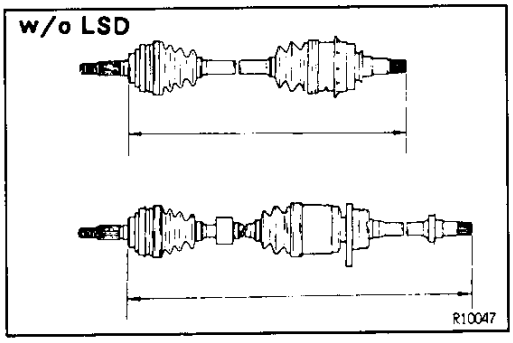

16. ASSEMBLE BOOT CLAMPS TO BOTH BOOTS

(a) Be sure the boot is on the shaft groove.

(b) Ensuse that the boot is not stretched or contracted when the drive shaft is at standard length.

Drive shaft standard length:

w/ LSD:

LH: 573.2 ± 5.0 mm (22.567 ± 0.197 in.)

RH: 861.5 ± 5.0 mm (33.917 ± 0.197 in.)

w/o LSD:

LH: 576.2 ± 5.0 mm (22.685 ± 0.197 in.)

RH: 863.8 ± 5.0 mm (34.007 ± 0.197 in.)

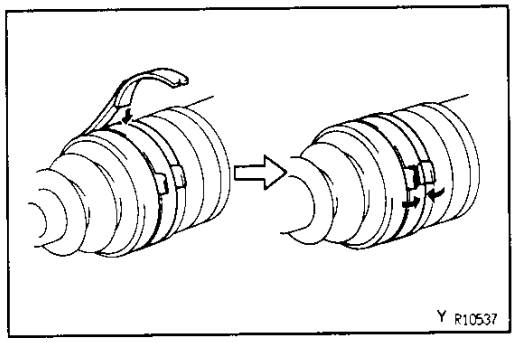

(c) Using a screwdriver, bend the band and lock it, as shown in the illustration.

Downloaded from www.Manualslib.com manuals search engine

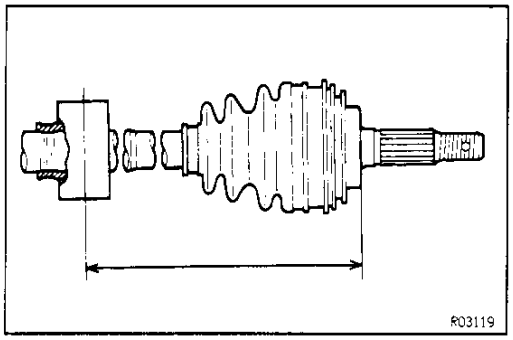

17. ASSEMBLE DAMPER CLAMP

(a) Be sure the damper clamp is on the shaft groove.

(b) Check the distance, as shown.

Distance:

w/ LSD:

205.0 ± 3.0 mm (8.070 ± 0.118 in.)

w/o LSD:

200.0 ± 3.0 mm (7.874 ± 0.118 in.)

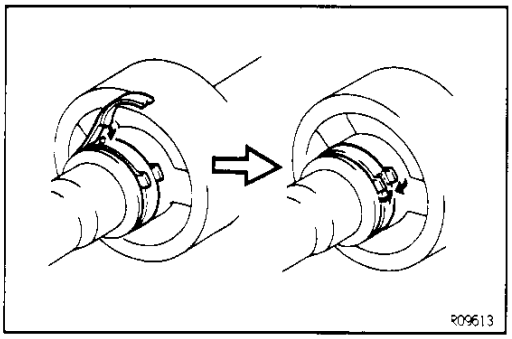

(c) Using a screwdriver, bend the band and lock it, as shown in the illustration.

SA

FRONT DRIVE SHAFT INSTALLATION

SA1DF-01

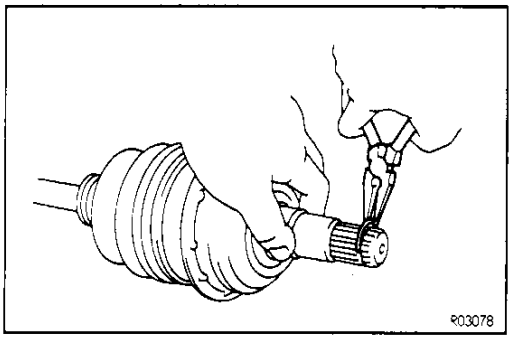

1. INSTALL LH DRIVE SHAFT

(a) Using pliers, install a new snap ring.

(b) Coat gear oil to the inboard joint tulip and differential case sliding surface.

(c) Using a brass bar and hammer, tap in the drive shaft until it makes contact with the pinion shaft.

HINT:

- Before installing the drive shaft, set the snap ring opening side facing downward.
- Whether or not the drive shaft is making contact with the pinion shaft can be known by the sound or feeling when driving it in.

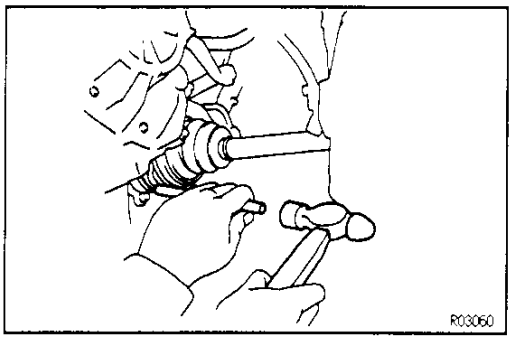

2. CHECK INSTALLATION OF LH DRIVE SHAFT

(a) Check that there is 2—3 mm (0.08—0.12 in.) of play in axial direction.

(b) Check that the drive shaft will not come out by trying to pull it completely out by hand.

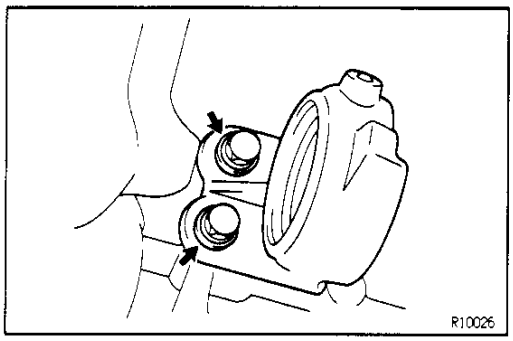

3. INSTALL RH DRIVE SHAFT

(a) w/ LSD:

Install the bearing bracket with 2 bolts.

Torque: 64 N·m (650 kgf·cm, 47 ft·lbf)

(b) Apply MP grease to the transaxle oil lip.

(c) Insert the center drive shaft with the RH drive shaft to the transaxle through the bearing bracket.

Downloaded from www.Manualslib.com manuals search engine

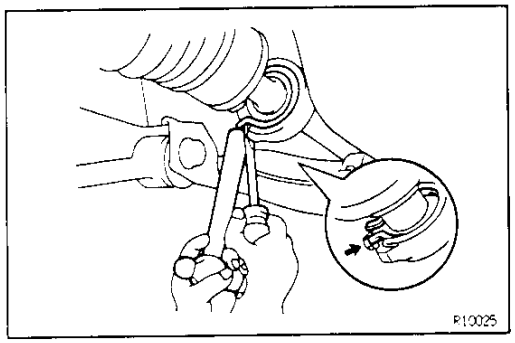

(d) Install the bolt to the bearing bracket.
Torque: 32 N·m (330 kgf·cm, 24 ft·lbf)

(e) Using pliers, install a new snap ring to the bearing brackt.

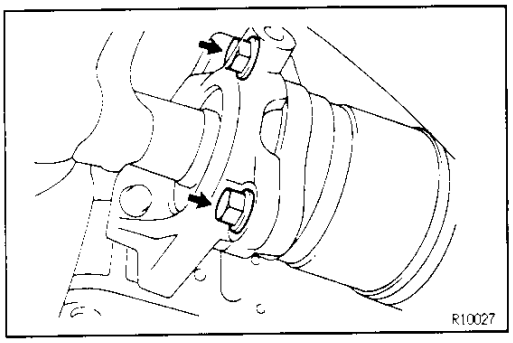

(a) w/o LSD:
Coat gear oil to the inboard joint and differential sliding surface.

(b) Install the center drive shaft with the RH drive shaft to the transaxle through the bearing bracket.

(c) Using pliers, install a new snap ring.

(d) Install the 2 bolts and tighten them.
Torque: 64 N·m (650 kgf·cm, 47 ft·lbf)

SA

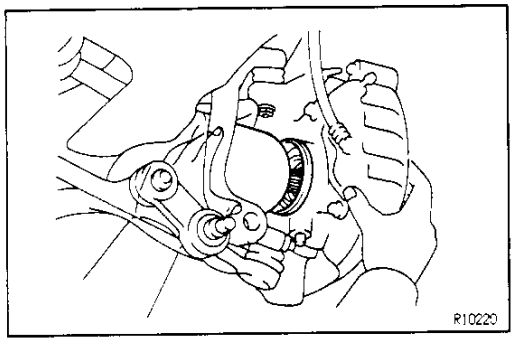

4. CONNECT DRIVE SHAFT

Install the outboard joint side of the drive shaft to the axle hub.
NOTICE: Be careful not to damage the inner oil seal.

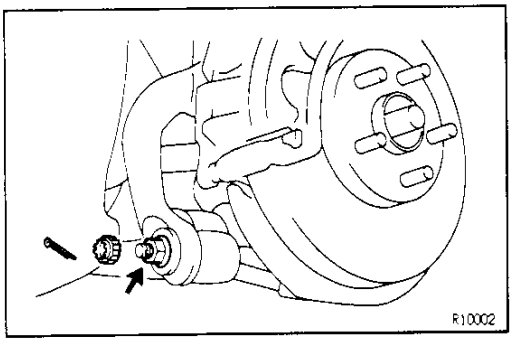

5. CONNECT CAMBER CONTROL ARM

(a) Connect the camber control arm to the steering knuckle and tighten the nut.
Torque: 172 N·m (1,750 kgf·cm, 127 ft·lbf)

(b) Install the lock cap and a new cotter pin.

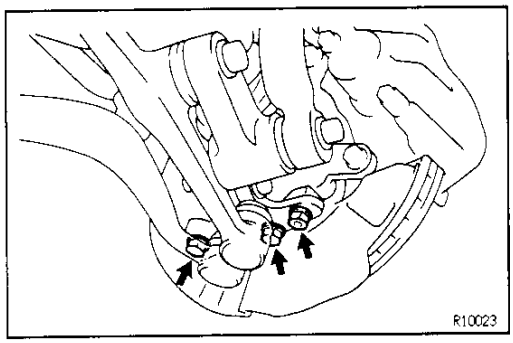

6. CONNECT LOWER BALL JOINT ATTACHMENT

Connect the lower ball joint attachment to the steering knuckle and tighten the 2 bolts and nut.
Torque: 108 N·m (1,100 kgf·cm, 80 ft·lbf)

Downloaded from www.Manualslib.com manuals search engine

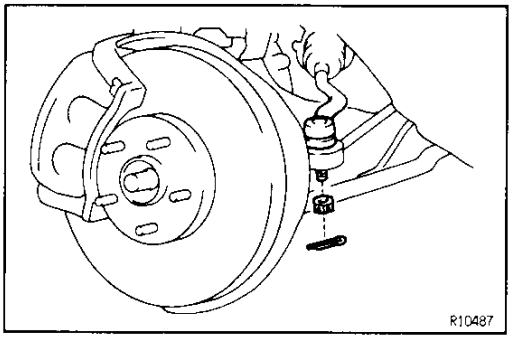

7. CONNECT TIE ROD END

(a) Connect the tie rod end to the steering knuckle and torque the nut.
Torque: 49 N·m (500 kgf·cm, 36 ft·lbf)

(b) Install a new cotter pin.
HINT: If the cotter pin hole does not line up, correct by tightening the nut by the smallest amount possible.

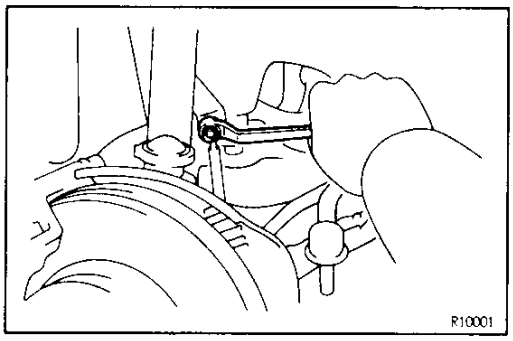

SA

8. CONNECT STABILIZER BAR LINK

Connect the stabilizer bar link to the shock absorbar and tighten the nut.
Torque: 64 N·m (650 kgf·cm, 47 ft·lbf)
HINT: If the ball joint stud turns together with the nut, use a hexagon wrench to hold the stud.

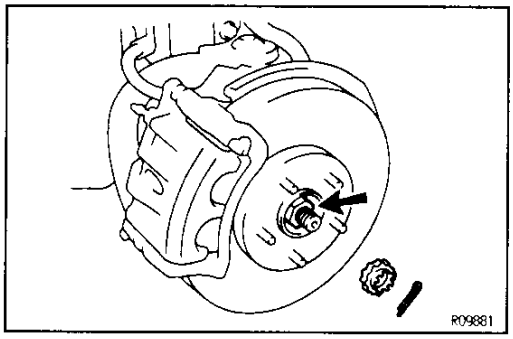

9. INSTALL BEARING LOCK NUT, LOCK NUT CAP AND NEW COTTER PIN

(a) Install and torque the bearing lock nut.
Torque: 226 N·m (2,300 kgf·cm, 166 ft·lbf)

(b) Install the lock nut cap and secure it with a new cotter pin.

10. FILL TRANSAXLE WITH FLUID

11. INSTALL ENGINE UNDER COVERS

12. CHECK FRONT WHEEL ALIGNMENT
(See page SA—5, 7)

13. w/ ABS:
CHECK ABS SPEED SENSOR SIGNAL
(See page BR—93)

Downloaded from www.Manualslib.com manuals search engine

FRONT DRIVE SHAFT (3S–FE, 5S–FE)

DESCRIPTION

SA02D–05

The drive has a tripod type CVJ (Constant Velocity Joint) on the differential side and Rzeppa type CVJ on the wheel side.

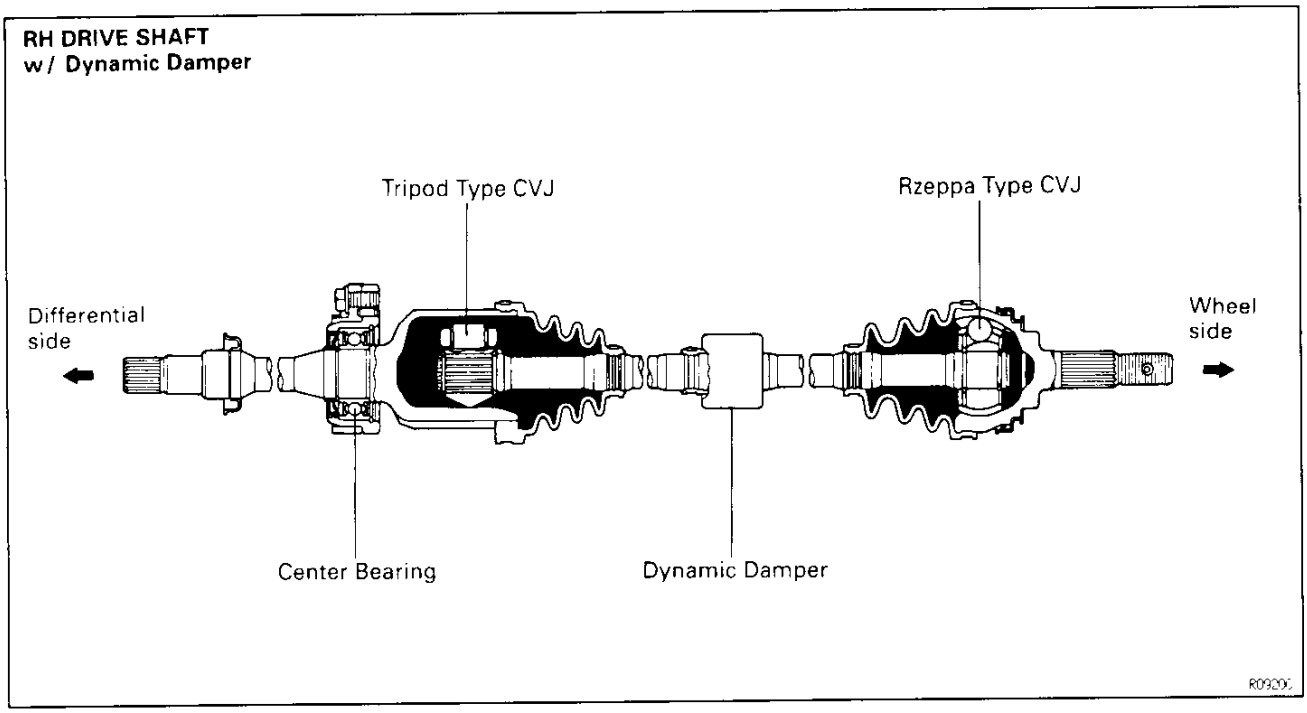

SA

Downloaded from www.Manualslib.com manuals search engine

PREPARATION

SST (SPECIAL SERVICE TOOLS)

SA02E−06

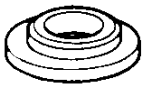	09506−35010	Differential Drive Pinion Rear Bearing Replacer	
	09608−12010	Front Hub & Drive Pinion Bearing Replacer Set	
	(09608−00020)	Remover & Replacer Handle	
	(09608−00060)	Drive Pinion Front Bearing Cup Replacer	
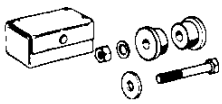	09608−16041	Front Hub Bearing Adjusting Tool	
	(09608−02020)	Bolt & Nut	
	(09608−02040)	Retainer	
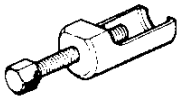	09610−20012	Pitman Arm Puller	Tie rod end
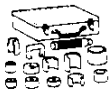	09710−30020	Suspension Bushing Tool Set	
	(09710−03140)	Lateral Rod Bushing Removing Base	
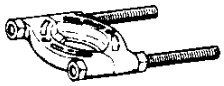	09950−00020	Bearing Remover	Center drive shaft dust cover

SA

Downloaded from www.Manualslib.com manuals search engine

SA02F−04

RECOMMENDED TOOLS

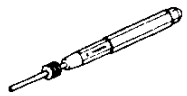	09031−00030 Pin Punch	
	09905−00012 Snap Ring No. 1 Expander	For removing and installing snap ring

SA02G−04

EQUIPMENT

Torque wrench	

SA02H−00

LUBRICANT

Item	Capacity	Classification
Outboard joint grease	120−130 g (4.2−4.6 oz.)	
Inboard joint grease		
A/T	180−190 g (6.3−6.7 oz.)	
M/T	232−242 g (8.2−8.5 oz.)	

SA

Downloaded from www.Manualslib.com manuals search engine

FRONT DRIVE SHAFT
COMPONENTS

SA02J—06

SA

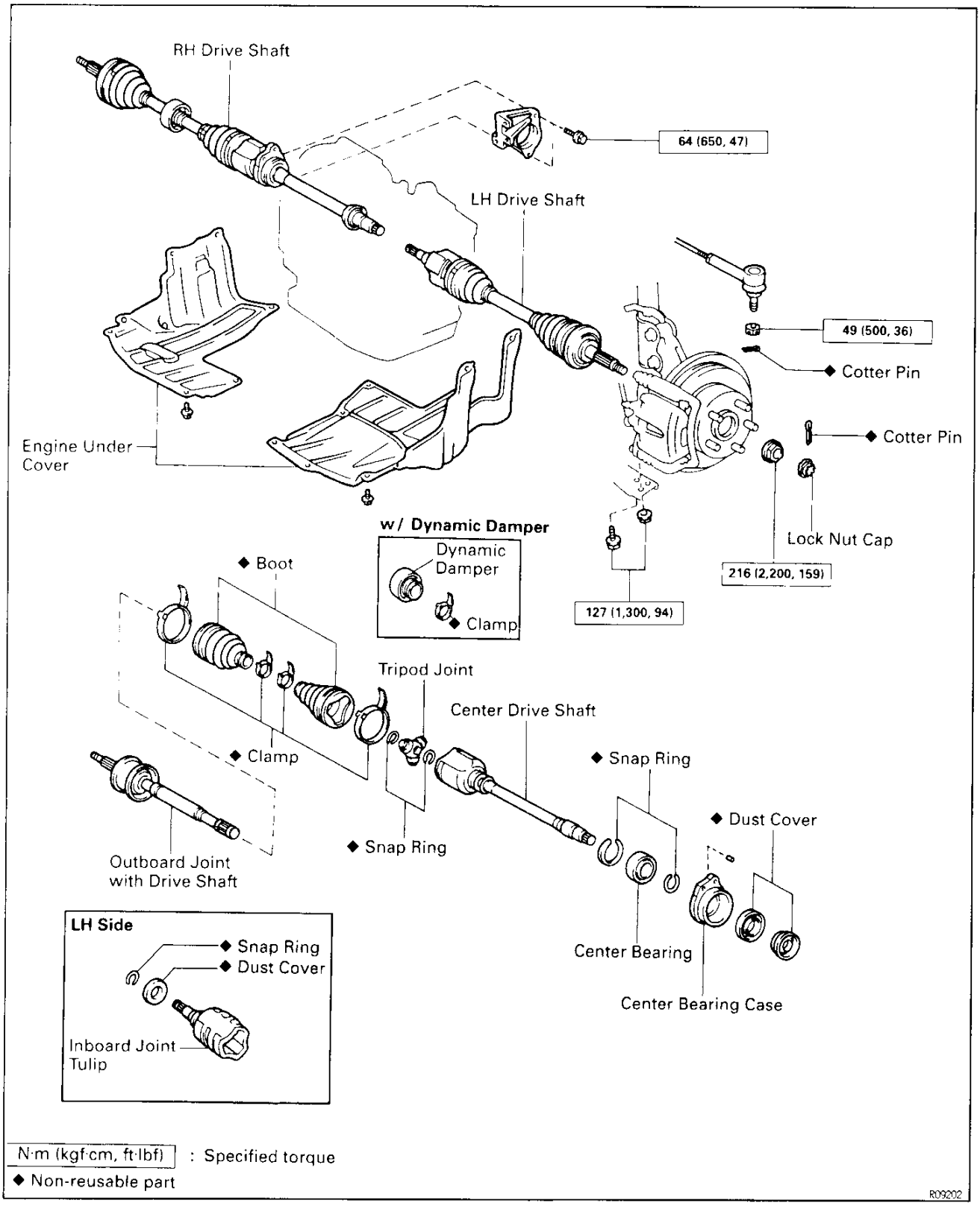

Downloaded from www.Manualslib.com manuals search engine

SA18N-01

FRONT DRIVE SHAFT REMOVAL

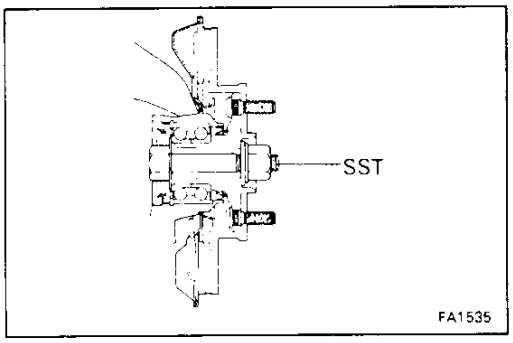

NOTICE: The hub bearing could be damaged if it is subjected to the vehicle weight, such as when moving the vehicle with the drive shaft removed. Therefore, if it is absolutely necessary to place the vehicle weight on the hub bearing, first support it with SST.
SST 09608—16041 (09608—02020, 09608—02040)

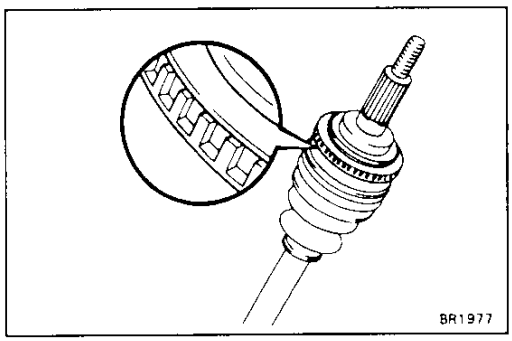

w/ABS:
After disconnecting the drive shaft from the axle hub, work carefully so as not to damage the sensor rotor serrations on the drive shaft.

SA

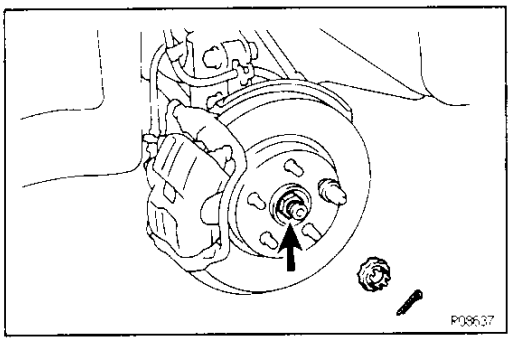

1. JACK UP VEHICLE AND REMOVE FRONT WHEEL
2. REMOVE ENGINE UNDER COVERS
3. DRAIN GEAR OIL (M/T) OR ATF (A/T)
4. REMOVE DRIVE SHAFT LOCK NUT
(a) Remove the cotter pin and lock nut cap.
(b) Loosen the bearing lock nut while depressing the brake pedal.

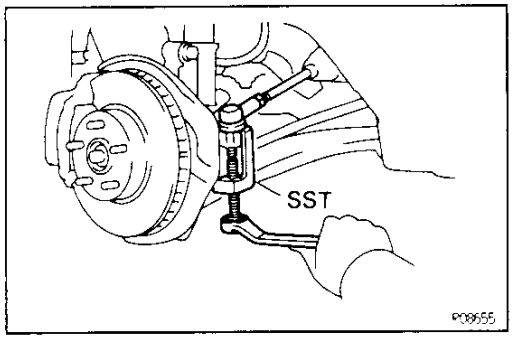

5. DISCONNECT TIE ROD END FROM STEERING KNUCKLE
(a) Remove the cotter pin and nut.
(b) Using SST, disconnect the tie rod end from the steering knuckle.
SST 09610—20012

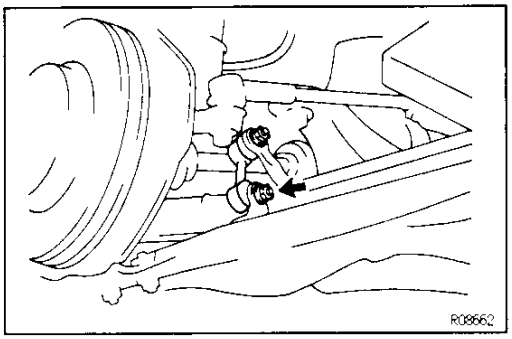

6. DISCONNECT STABILIZER BAR LINK FROM LOWER ARM
Remove the nut and disconnect the stabilizer bar link from lower arm.
HINT: If the ball joint stud turns together with the nut, use a hexagon wrench to hold the stud.

Downloaded from www.Manualslib.com manuals search engine

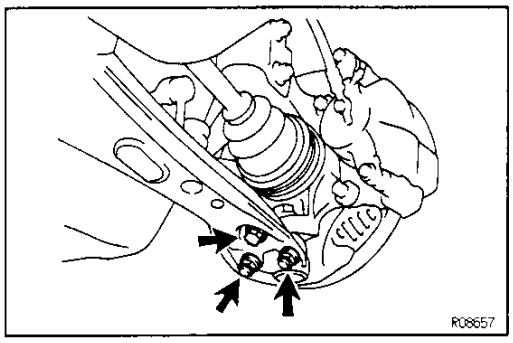

7. DISCONNECT LOWER BALL JOINT FROM LOWER ARM

(a) Remove the bolt and 2 nuts.

(b) Disconnect the lower ball joint from lower suspension arm.

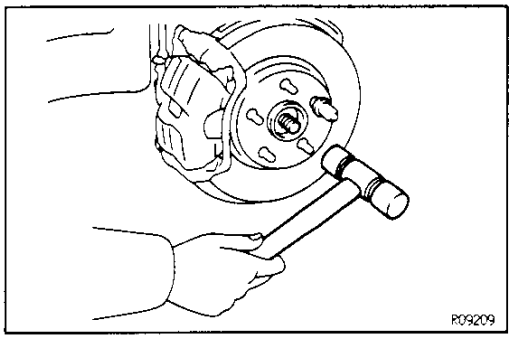

8. DISCONNECT DRIVE SHAFT FROM AXLE HUB

Using a plastic hammer, disconnect the drive shaft from the axle hub.

NOTICE: Cover the drive shaft boot with cloth to protect it from damage.

SA

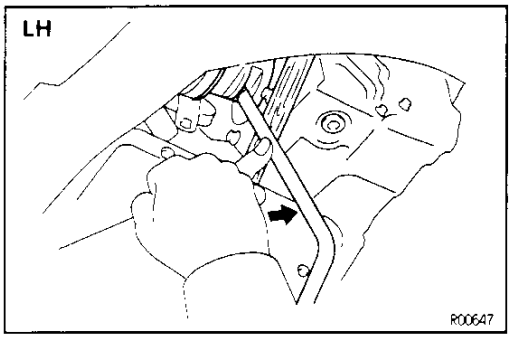

9. REMOVE LH DRIVE SHAFT

(a) Using hub nut wrench and hammer handle or equivalent, pull out the drive shaft as shown.

NOTICE:

- **Be careful not to damage the dust cover.**
- **Cover the hub nut wrench or equivalent with cloth so as not to damage the transaxle body.**

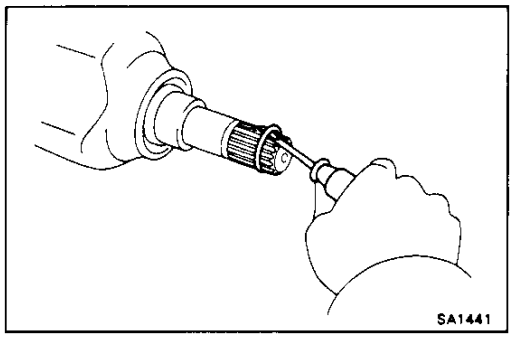

(b) Using a screwdriver, remove the snap ring.

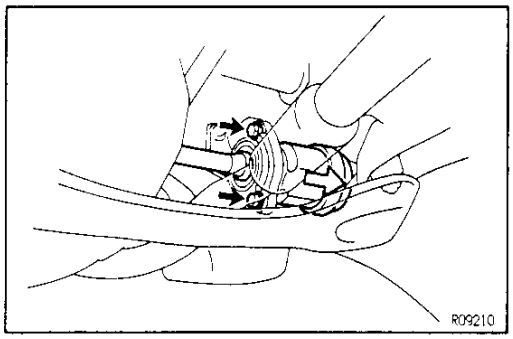

10. REMOVE RH DRIVE SHAFT

(a) Remove the 2 bolts of the center bearing bracket, and pull out the RH drive shaft together with the center bearing case and center drive shaft.

(b) Remove the center drive shaft with the RH drive shaft to the transaxle through the bearing bracket.

Downloaded from www.Manualslib.com manuals search engine

SA18P-02

FRONT DRIVE SHAFT DISASSEMBLY

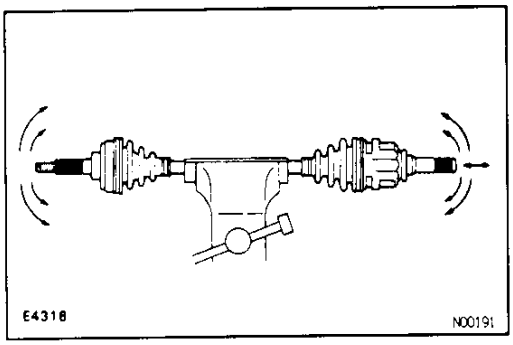

1. CHECK DRIVE SHAFT

(a) Check to see that there is no play in the outboard joint.

(b) Check to see that the inboard joint slides smoothly in the thrust direction.

(c) Check to see that there is not noticeable play in the radial direction of the inboard joint.

(d) Check for damage to boots.

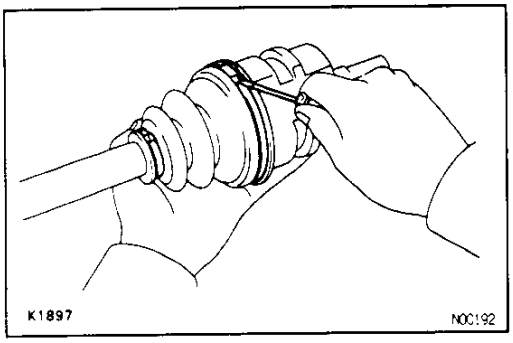

2. REMOVE INBOARD JOINT BOOT CLAMPS

(a) Using a screwdriver, remove the 2 inboard joint boot clamps.

(b) Slide the inboard joint boot toward the outboard joint.

SA

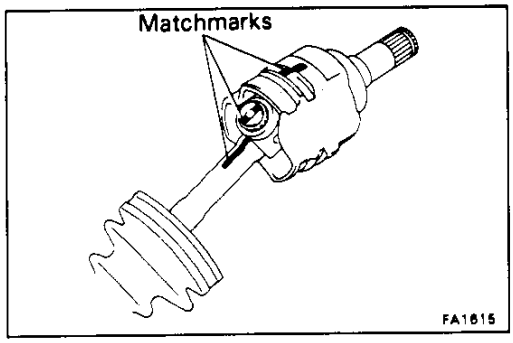

3. DISASSEMBLE INBOARD JOINT TULIP

(a) Place matchmarks on the tripod and inboard joint tulip or center drive shaft.
NOTICE: Do not punch the marks.

(b) Remove the inboard joint tulip or center drive shaft from the drive shaft.

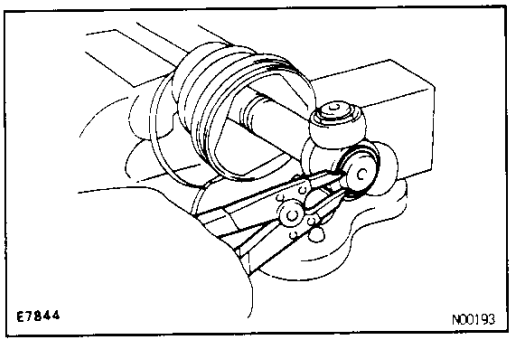

4. REMOVE TRIPOD JOINT

(a) Using a snap ring expander remove the snap ring.

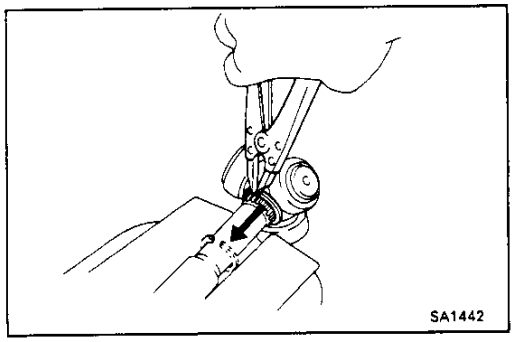

(b) Using a snap ring expander, temporarily slide the snap ring toward the outboard joint side.

Downloaded from www.Manualslib.com manuals search engine

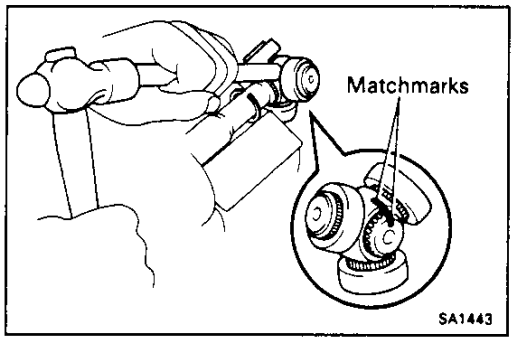

(c) Place the matchmarks on the drive shaft and tripod.
NOTICE: Do not punch the marks.

(d) Using a brass bar and a hammer, remove the tripod joint from the drive shaft.
NOTICE: Do not tap the roller.

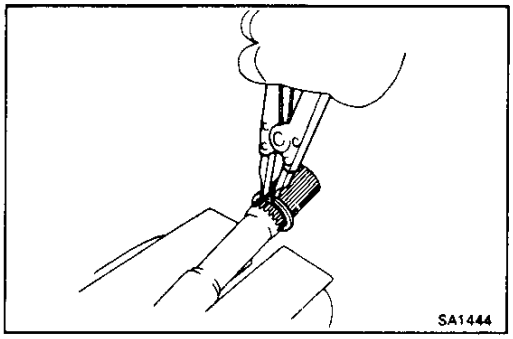

(e) Using a snap ring expander, remove the snap ring.

5. REMOVE OUTBOARD JOINT BOOT

SA

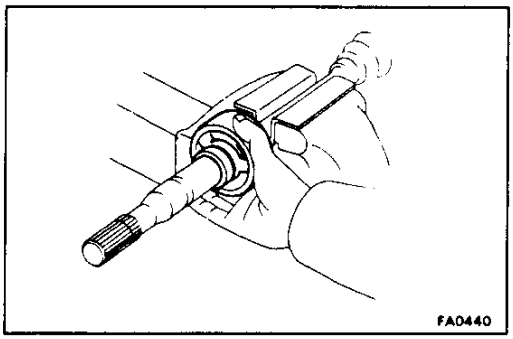

6. w/ DYNAMIC DAMPER (RH DRIVE SHAFT): REMOVE DYNAMIC DAMPER

(a) Using screwdriver, remove the clamp of the dynamic damper.

(b) Remove the dynamic damper.

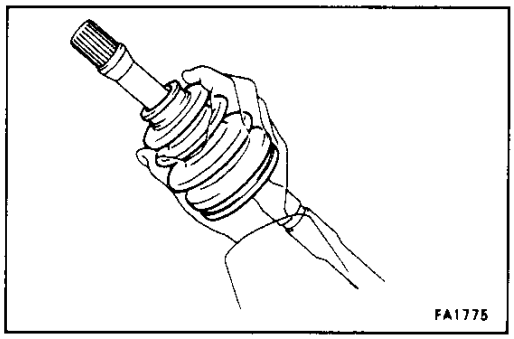

7. REMOVE OUTBOARD JOINT BOOT

(a) Using screwdriver, remove the 2 clamps of the outboard joint boot.

(b) Remove the boot from the outboard joint.
NOTICE: Do not disassemble the outboard joint.

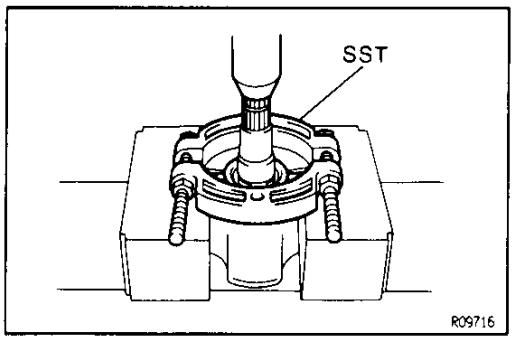

8. REMOVE DUST COVER

LH Drive Shaft:

Using SST and press, press out the dust cover from the inboard joint tulip.

SST 09950—00020

Downloaded from www.Manualslib.com manuals search engine

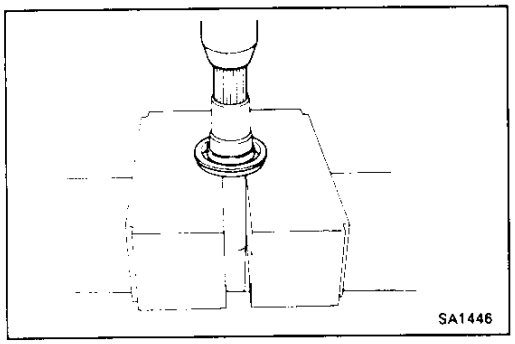

RH Drive Shaft:
Using a press, press out the dust cover from the center drive shaft.

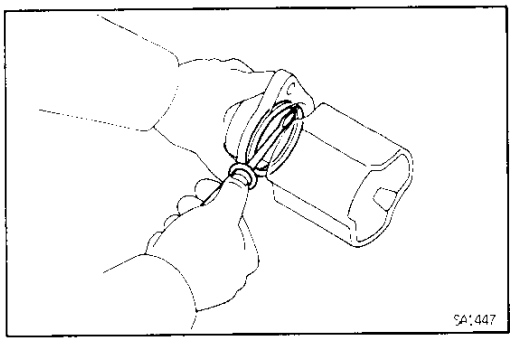

9. RH DRIVE SHAFT:
DISASSEMBLE CENTER DRIVE SHAFT

(a) Using a screwdriver, remove the snap ring.

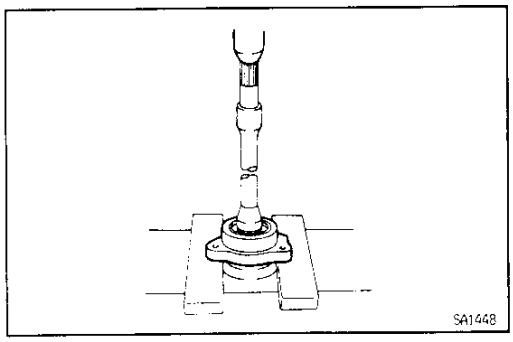

(b) Using a press, press out the bearing case.

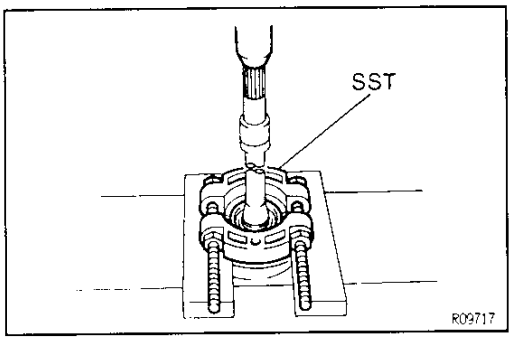

(c) Using SST and a press, press out the dust cover.
SST 09950–00020

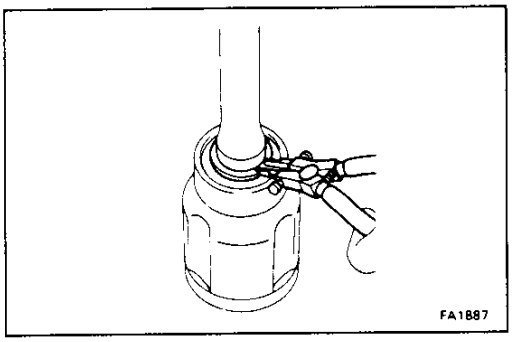

(d) Using a snap ring expander, remove the snap ring.

Downloaded from www.Manualslib.com manuals search engine

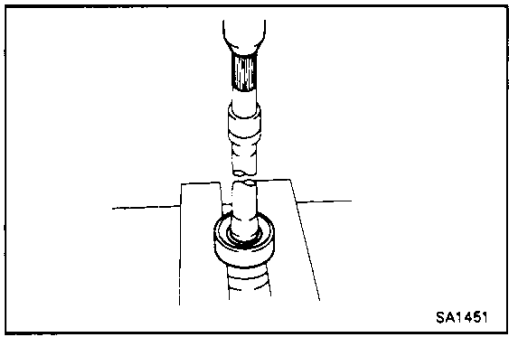

(e) Using a press, press out the bearing.
(f) Remove the snap ring.

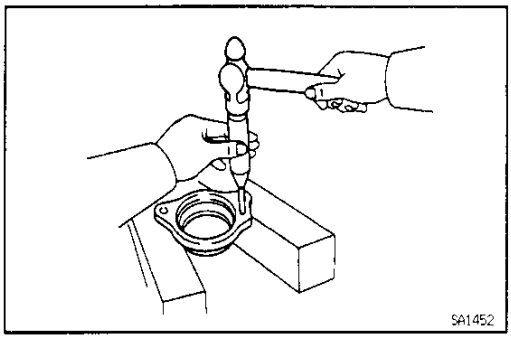

(g) Using a punch and a hammer, tap out the straight pin.

SA

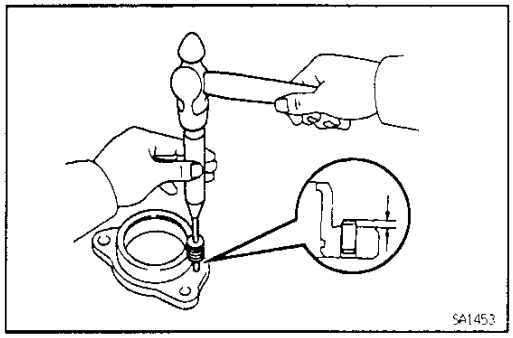

FRONT DRIVE SHAFT ASSEMBLY

SA150-02

1. RH DRIVE SHAFT:
ASSEMBLE CENTER DRIVE SHAFT

(a) Install the straight pin into the bearing case.

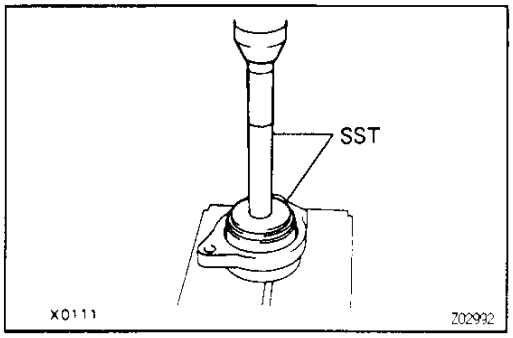

(b) Using SST and a press, press a new bearing into the bearing case.
SST 09608–12010 (09608–00020, 09608–00060)

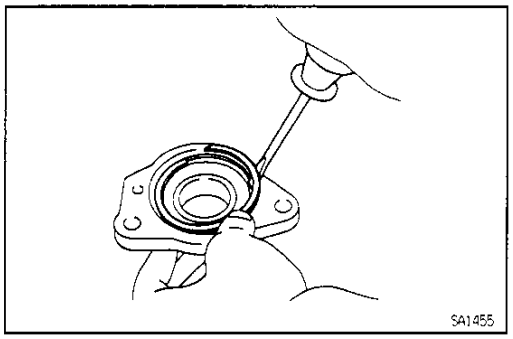

(c) Using a screwdriver, install a new snap ring.

Downloaded from www.Manualslib.com manuals search engine

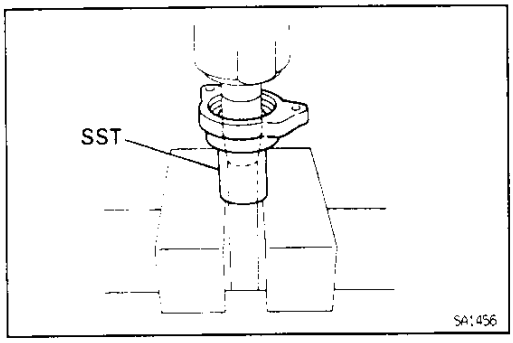

(d) Using SST and a press, press a new bearing into the bearing case assembly to the center drive shaft.
SST 09710—30020 (09710—03140)

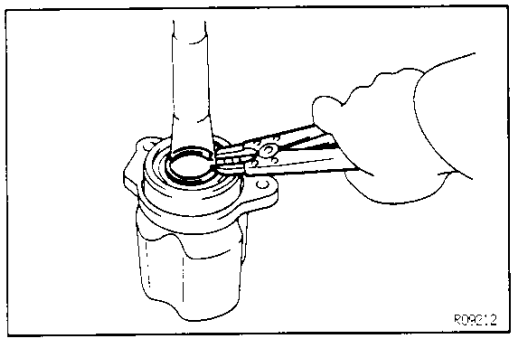

(e) Using a snap ring expander, install a new snap ring.

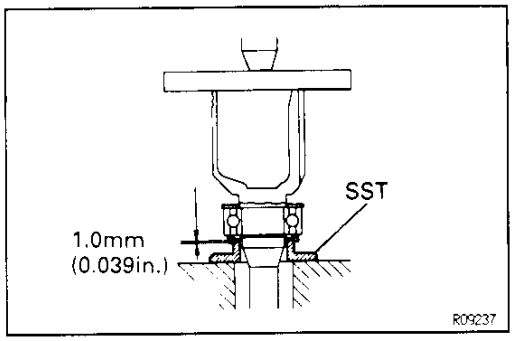

(f) Using SST and press, press in a new dust cover.
SST 09506—35010
HINT: The clearance between the dust cover and the bearing should be kept in the ranges shown in the illustration.

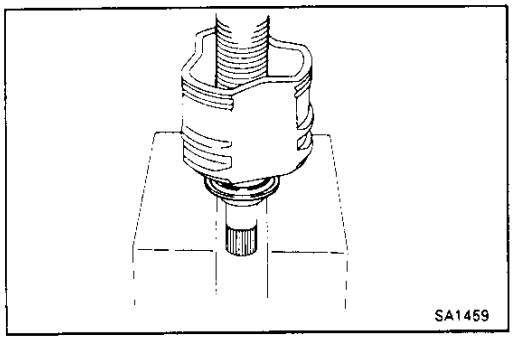

2. INSTALL DUST COVER

LH Drive Shaft:
Using a press, install a new dust cover.

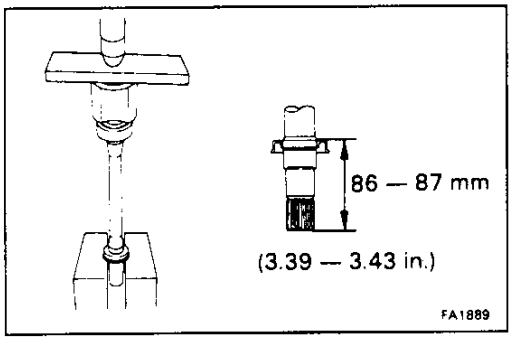

RH Drive Shaft:
Using a steel plate and press, press in a new dust cover until the distance from the tip of the center drive shaft to the dust cover reaches the specification, as shown in the illustration.

Downloaded from www.Manualslib.com manuals search engine

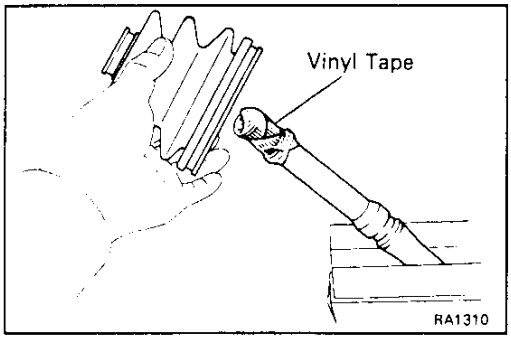

3. TEMPORARILY INSTALL BOOTS AND DAMPER (w/ DYNAMIC DAMPER)

HINT: Before installing the outboard joint boot, wrap vinyl tape around the spline of the drive shaft to prevent damaging the boots and damper.

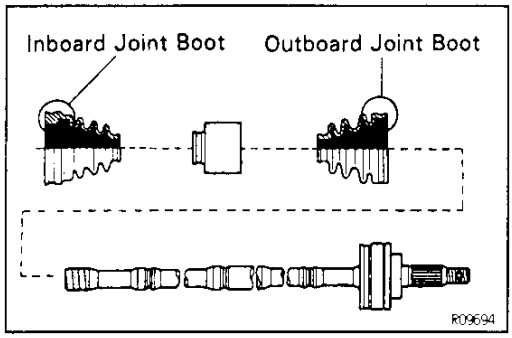

(a) Temporarily install a new outboard boot to the drive shaft.

(b) w/ Dynamic damper:
Temporarily install the dynamic damper to the drive shaft.

(c) Temporarily install a new inboard joint boot to the drive shaft.

SA

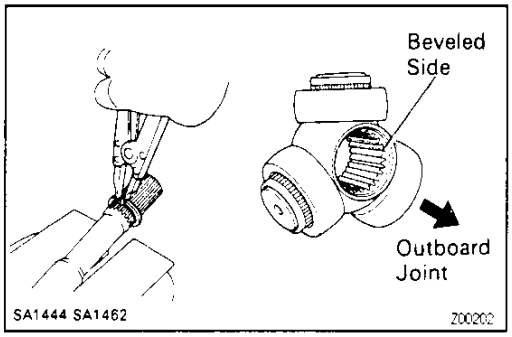

4. INSTALL TRIPOD JOINT

(a) Using a snap ring expander, install a new snap ring.

(b) Place the beveled side of the tripod joint axial spline toward the outboard joint.

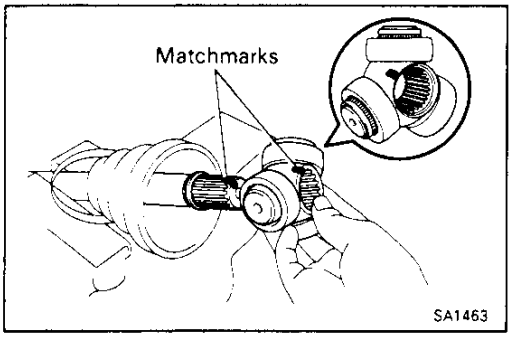

(c) Align the matchmarks placed before removal.

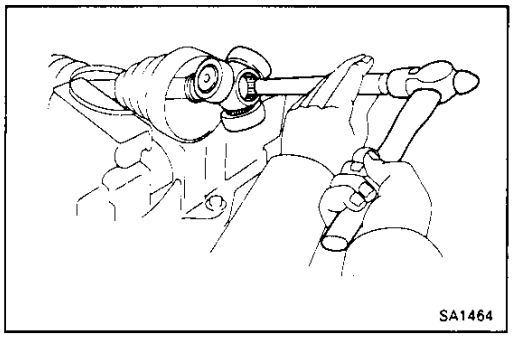

(d) Using a brass bar and hammer, tap in the tripod joint to the drive shaft.

NOTICE: Do not tap the roller.

Downloaded from www.Manualslib.com manuals search engine

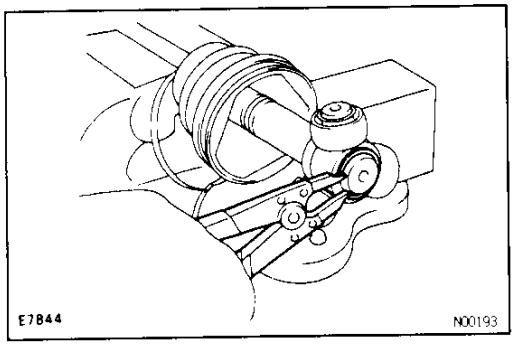

(e) Using a snap ring expander, install a new snap ring.

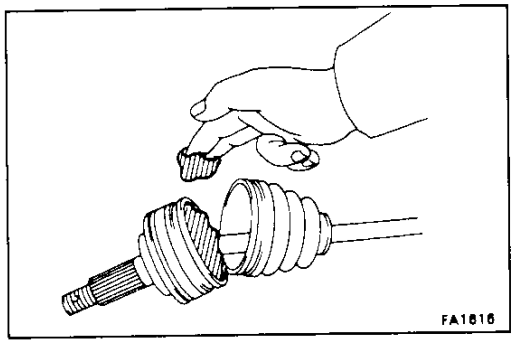

5. INSTALL BOOT TO OUTBOARD JOINT

Before assembling the boot, fill grease into the outboard joint and boot.

HINT: Use the grease supplied in the boot kit.

Grease capacity (Color = Black):

120—130 g (4.2—4.6 oz.)

SA

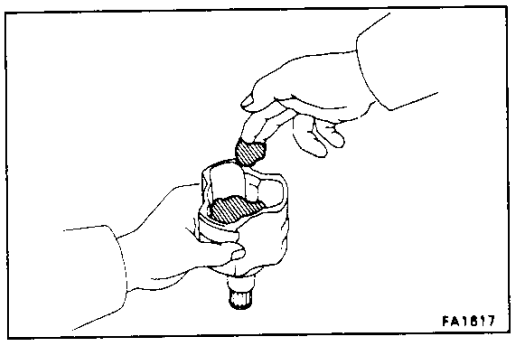

6. INSTALL INBOARD JOINT TULIP TO FRONT DRIVE SHAFT

(a) Pack in the grease to the boot and inboard joint tulip.

HINT: Use the grease supplied in the boot kit.

Grease capacity (Color = Yellow ocher):

A/T

180—190 g (6.3—6.7 oz.)

M/T

232—242 g (8.2—8.5 oz.)

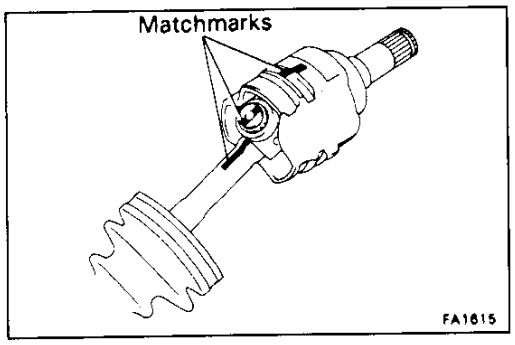

(b) Align the matchmarks placed before removal, and install the inboard joint tulip to the drive shaft.

(c) Install the boot to the inboard joint tulip.

Downloaded from www.Manualslib.com manuals search engine

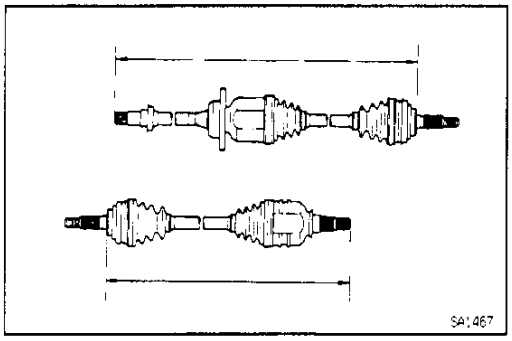

7. ASSEMBLE BOOT CLAMPS TO BOTH BOOTS

(a) Be sure the boot is on the shaft groove.

(b) Ensure that the boot is not stretched or contracted when the drive shaft is at standard length.

Drive shaft standard length:

A/T

LH: 576.7 ± 5.0 mm (22.713 ± 0.197 in.)

RH: 862.0 ± 5.0 mm (33.937 ± 0.197 in.)

M/T

LH: 572.4 ± 5.0 mm (22.535 ± 0.197 in.)

RH: 857.5 ± 5.0 mm (33.760 ± 0.197 in.)

(c) Using a screwdriver, bend the band and lock it, as shown in the illustration.

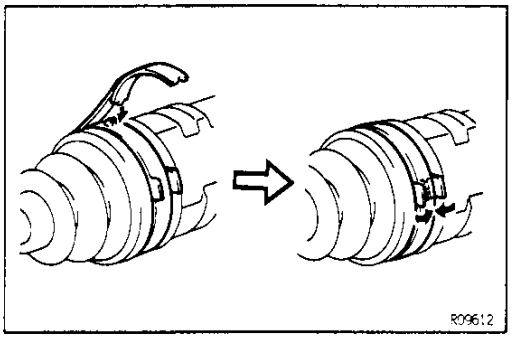

SA

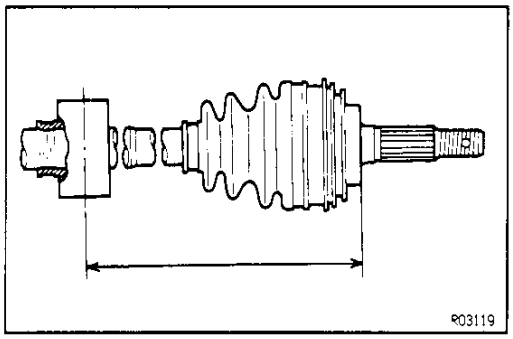

8. w/DYNAMIC DAMPER (RH DRIVE SHAFT): ASSEMBLE DAMPER CLAMP

(a) Be sure the damper clamp is on the shaft groove.

(b) Check the distance, as shown.

Distance:

200.0 ± 5.0 mm (7.874 ± 0.197 in.)

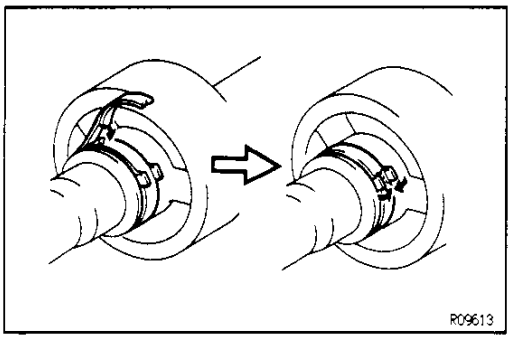

(c) Using a screwdriver, bend the band and lock it, as shown in the illustration.

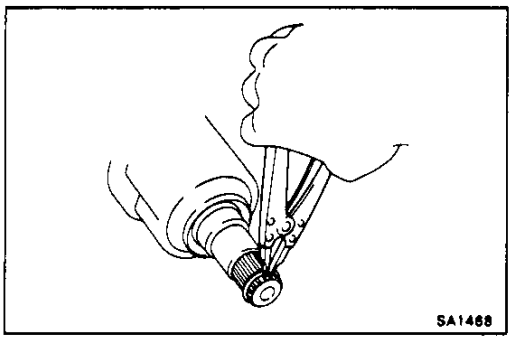

FRONT DRIVE SHAFT INSTALLATION

SA1BR-02

1. INSTALL LH DRIVE SHAFT

(a) Using a snap ring expander, install a new snap ring.

(b) Coat gear oil to the inboard joint tulip and differential case sliding surface.

Downloaded from www.Manualslib.com manuals search engine

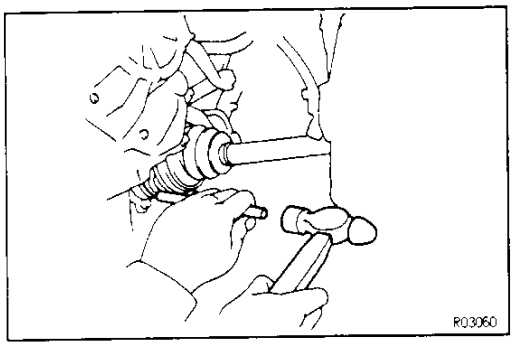

(c) Using a brass bar and hammer, tap in the drive shaft until it makes contact with the pinion shaft.
HINT:
- Before installing the drive shaft, set the snap ring opening side facing downward.
- Whether or not the drive shaft is making contact with the pinion shaft can be known by the sound or feeling when driving it in.

2. CHECK INSTALLATION OF LH DRIVE SHAFT

(a) Check that there is 2—3 mm (0.08—0.12 in.) of play in the axial direction.

(b) Check that the drive shaft will not come out by trying to pull it completely out by hand.

SA

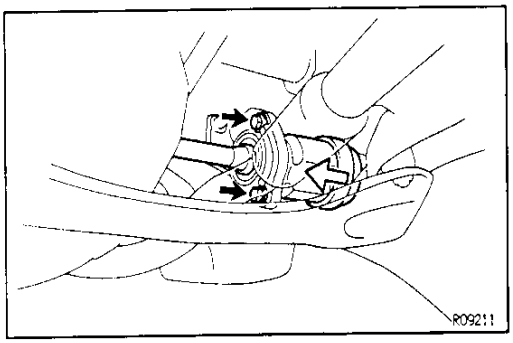

3. INSTALL RH DRIVE SHAFT

(a) Coat gear oil to the inboard joint tulip and differential case sliding surface.

(b) Install the center drive shaft with the RH drive shaft to the transaxle through the bearing bracket.
NOTICE: Do not damage the oil seal lip.

(c) Install the 2 bolts and tighten them.
Torque: 64 N·m (650 kgf·cm, 47 ft·lbf)

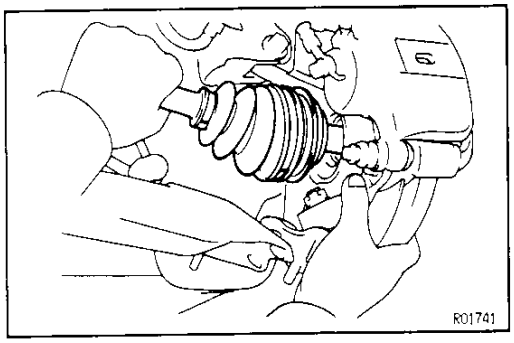

4. CONNECT DRIVE SHAFT TO AXLE HUB

Install the outboard joint side of the drive shaft to the axle hub.
NOTICE: Be careful not to damage the inner oil seal, boots and ABS speed sensor rotor.

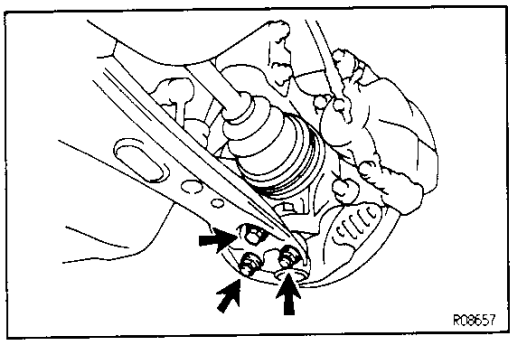

5. CONNECT LOWER BALL JOINT TO LOWER SUSPENSION ARM

Connect the lower ball joint to lower arm and tighten the bolt and 2 nuts.
Torque: 127 N·m (1,300 kgf·cm, 94 ft·lbf)

Downloaded from www.Manualslib.com manuals search engine

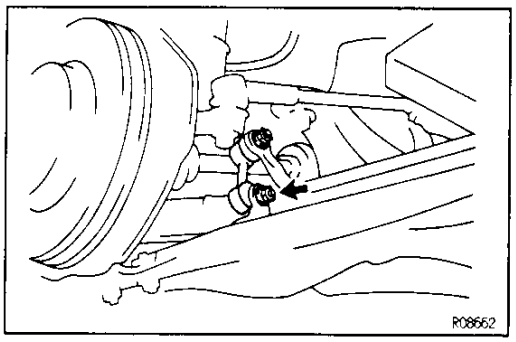

6. CONNECT STABILIZER BAR LINK TO LOWER ARM
Torque: 44 N·m (450 kgf·cm, 33 ft·lbf)
HINT: If the ball joint stud turns together with the nut, use a hexagon wrench to hold the stud.

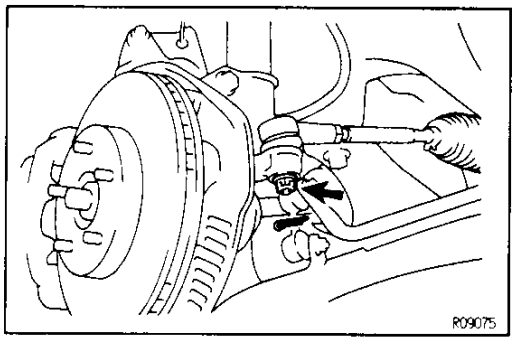

7. CONNECT TIE ROD END TO STEERING KNUCKLE
(a) Connect the tie rod end to the steering knuckle and torque the nut.
Torque: 49 N·m (500 kgf·cm, 36 ft·lbf)
(b) Install a new cotter pin.
HINT: If the cotter pin hole does not line up, correct by tightening the nut by the smallest amount possible.

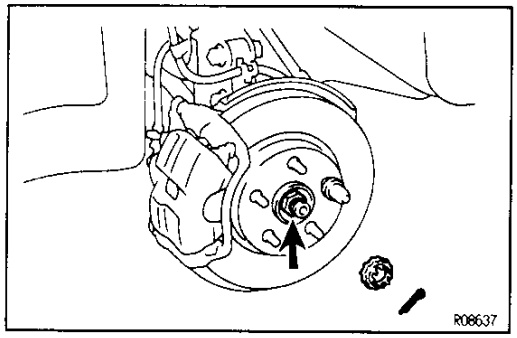

8. INSTALL BEARING LOCK NUT, LOCK NUT CAP AND NEW COTTER PIN
(a) Install and torque the lock nut.
Torque: 216 N·m (2,200 kgf·cm, 159 ft·lbf)
(b) Install the lock nut cap and secure it with a new cotter pin.

9. FILL TRANSAXLE WITH GEAR OIL (M/T) OR ATF (A/T)

10. INSTALL ENGINE UNDER COVERS

11. INSTALL FRONT WHEEL AND LOWER VEHICLE
Torque: 103 N·m (1,050 kgf·cm, 76 ft·lbf)

12. CHECK AND ADJUST FRONT WHEEL ALIGNMENT
(See page SA—7)

13. w/ ABS:
CHECK ABS SPEED SENSOR SIGNAL
(See page BR—93)

Downloaded from www.Manualslib.com manuals search engine

FRONT DRIVE SHAFT (7A—FE)

DESCRIPTION

SA004-07

The front drive shaft has a slidable tripod type CVJ (Constant Velocity Joint) on the differential side and Rzeppa type CVJ on the wheel side.
A dynamic damper has been mounted on the right—hand drive shaft to reduce vibration and noise.

RH DRIVE SHAFT

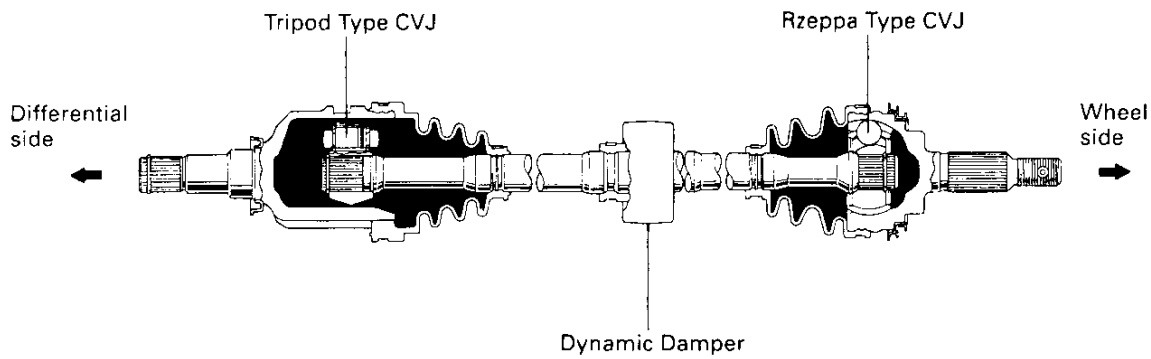

R01869 Z11469

Downloaded from www.Manualslib.com manuals search engine

PREPARATION

SST (SPECIAL SERVICE TOOLS)

SA02E—07

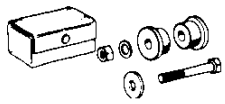	09608—16041	Front Hub Bearing Adjusting Tool	
	(09608—02020)	Bolt & Nut	
	(09608—02040)	Retainer	
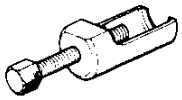	09610—20012	Pitman Arm Puller	
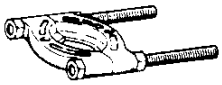	09950—00020	Bearing Remover	

SA

RECOMMENDED TOOLS

SA02F—02

	09905—00012	Snap Ring No. 1 Expander	For removing and installing snap ring

EQUIPMENT

SA02G—02

Torque wrench	

LUBRICANT

SA02H—02

Item	Capacity	Classification
Outboard joint grease	120—130 g (4.2—4.6 oz.)	
Inboard joint grease	180—190 g (6.3—6.7 oz.)	

Downloaded from www.Manualslib.com manuals search engine

FRONT DRIVE SHAFT
COMPONENTS

SA007-07

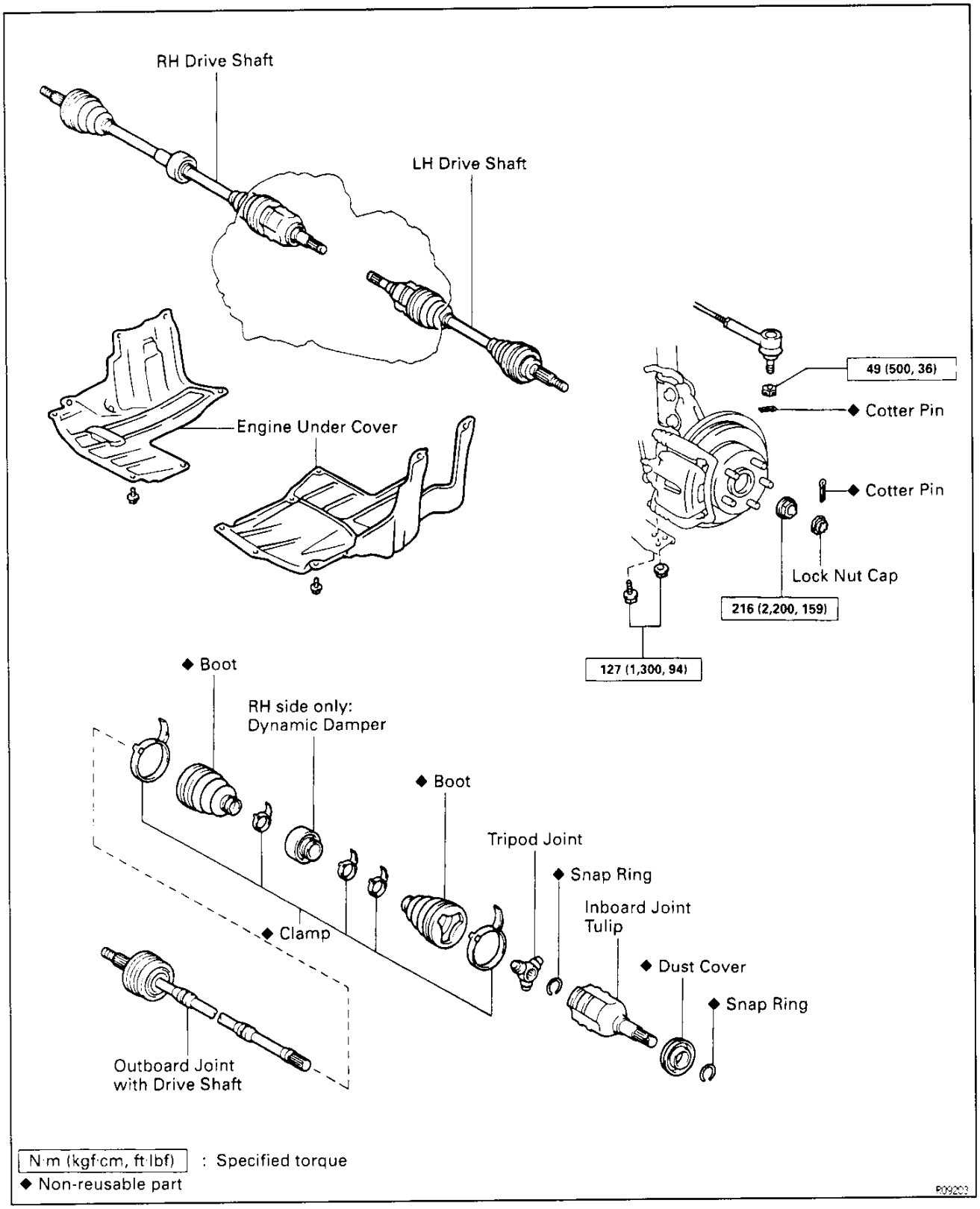

SA

Downloaded from www.Manualslib.com manuals search engine

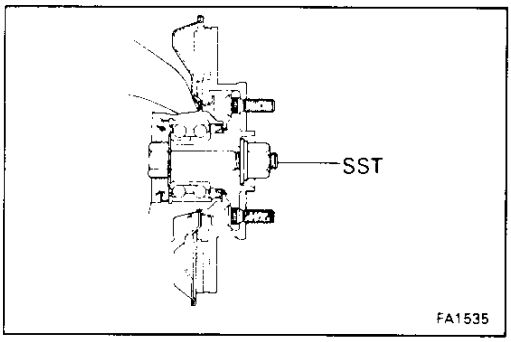

FRONT DRIVE SHAFT REMOVAL

SA188-02

NOTICE: The hub bearing could be damaged if it is subjected to the vehicle weight, such as when moving the vehicle with the drive shaft removed. Therefore, if it is absolutely necessary to place the vehicle weight on the hub bearing, first support it with SST.

SST 09608—16041 (09608—02020, 09608—02040)

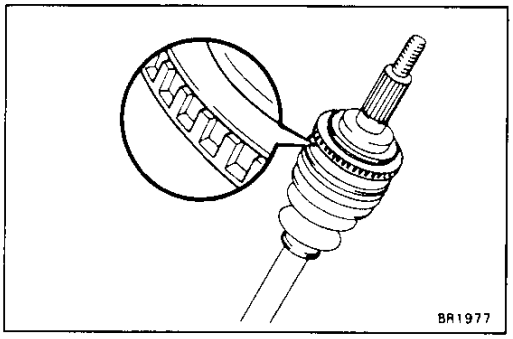

w/ABS:
After disconnecting the drive shaft from the axle hub, work carefully so as not to damage the sensor rotor serrations on the drive shaft.

SA

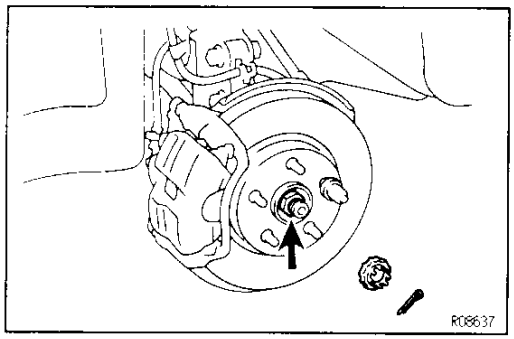

1. **JACK UP VEHICLE AND REMOVE FRONT WHEEL**
2. **REMOVE ENGINE UNDER COVERS**
3. **DRAIN GEAR OIL (M/T) OR ATF (A/T)**
4. **REMOVE DRIVE SHAFT LOCK NUT**

(a) Remove the cotter pin and lock nut cap.
(b) Loosen the bearing lock nut while depressing the brake pedal.

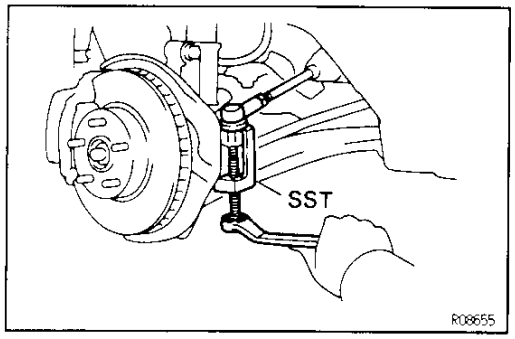

5. **DISCONNECT TIE ROD END FROM STEERING KNUCKLE**

(a) Remove the cotter pin and nut.
(b) Using SST, disconnect the tie rod end from the steering knuckle.
SST 09610—20012

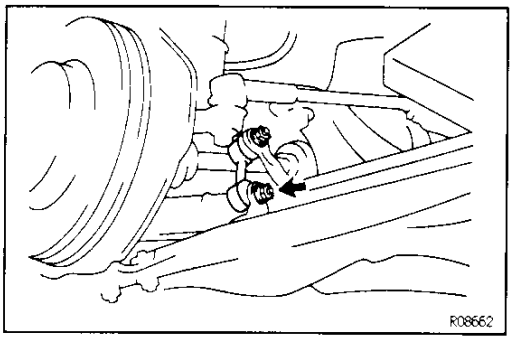

6. **DISCONNECT STABILIZER BAR LINK FROM LOWER ARM**

Remove the nut and disconnect the stabilizer bar link from lower arm.
HINT: If the ball joint stud turns together with the nut, use a hexagon wrench to hold the stud.

Downloaded from www.Manualslib.com manuals search engine

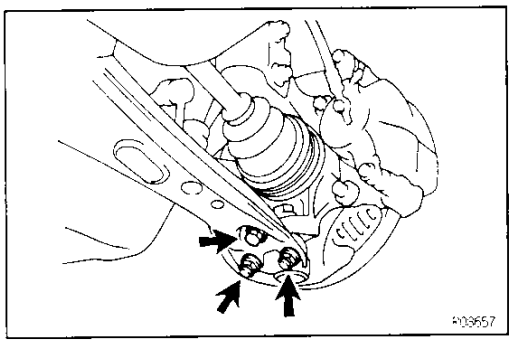

7. DISCONNECT LOWER BALL JOINT FROM LOWER ARM

(a) Remove the bolt and 2 nuts.

(b) Disconnect the lower ball joint from lower suspension arm.

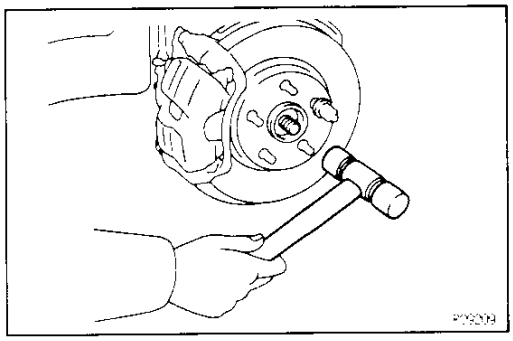

8. DISCONNECT DRIVE SHAFT FROM AXLE HUB

Using a plastic hammer, disconnect the drive shaft from the axle hub.

NOTICE: Be careful not to damage the inner oil seal.

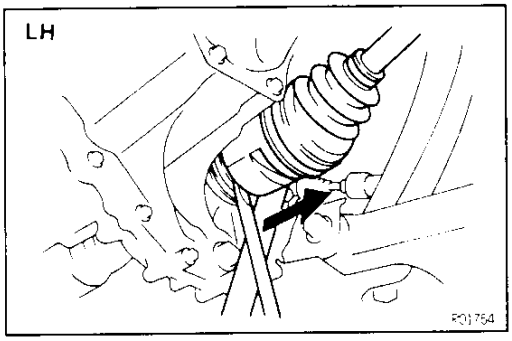

9. REMOVE DRIVE SHAFT

LH DRIVE SHAFT:

Using a hammer and hub nut wrench or an equivalent, remove the drive shaft.

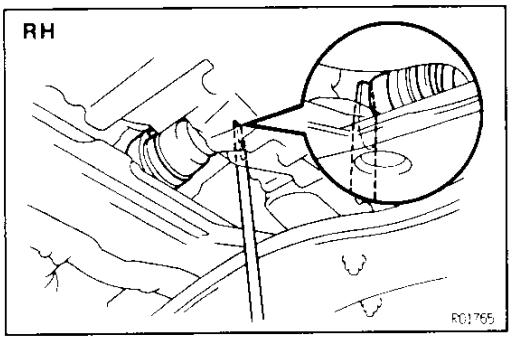

RH DRIVE SHAFT:

Using a hub nut wrench or an equivalent, remove the drive shaft.

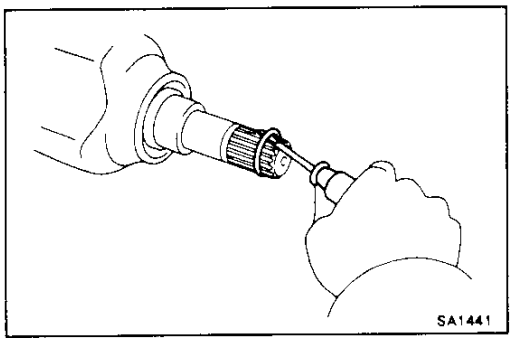

10. REMOVE SNAP RING

Downloaded from www.Manualslib.com manuals search engine

SA18T-02

FRONT DRIVE SHAFT DISASSEMBLY

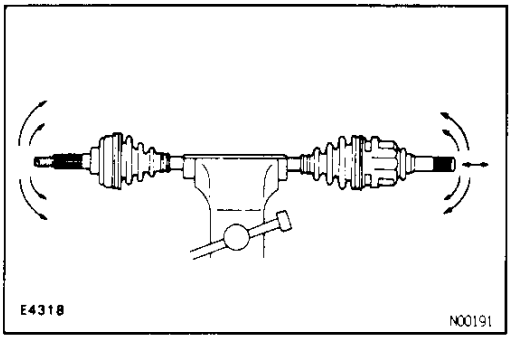

1. CHECK DRIVE SHAFT

(a) Check to see that there is no play in the outboard joint.

(b) Check to see that the inboard joint slides smoothly in the thrust direction.

(c) Check to see that there is no noticeable play in the radial direction of the inboard joint.

(d) Check for damage to the boots.

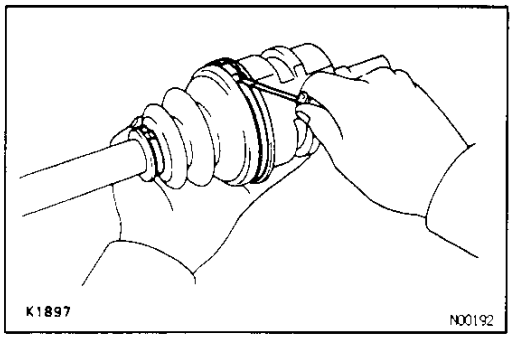

2. REMOVE INBOARD JOINT BOOT CLAMPS

(a) Using a screwdriver, remove the 2 boot clamps.

(b) Slide the inboard joint boot toward the outboard joint.

SA

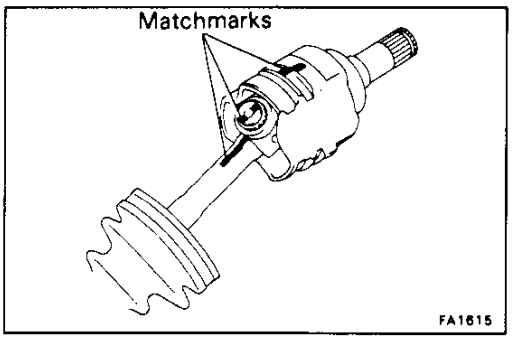

3. REMOVE INBOARD JOINT TULIP

(a) Place matchmarks on the inboard joint tulip, tripod and drive shaft.

NOTICE: Do not punch the marks.

(b) Remove the inboard joint tulip from the drive shaft.

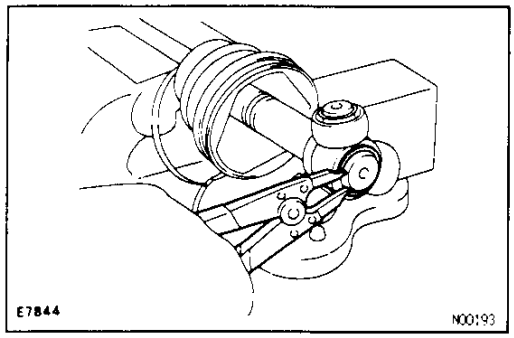

4. REMOVE TRIPOD JOINT

(a) Using a snap ring expander, remove the snap ring.

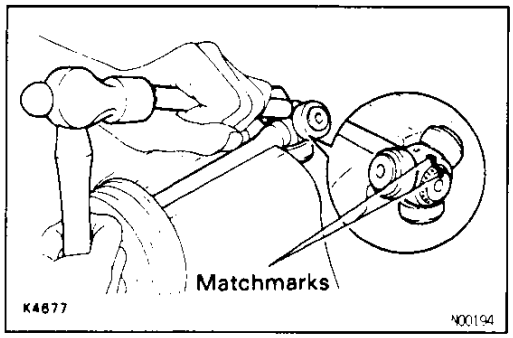

(b) Place matchmarks on the shaft and tripod.

NOTICE: Do not punch the marks.

(c) Using a brass bar and hammer, remove the tripod joint from the drive shaft.

NOTICE: Do not tap the roller.

5. REMOVE INBOARD JOINT BOOT

Downloaded from www.Manualslib.com manuals search engine

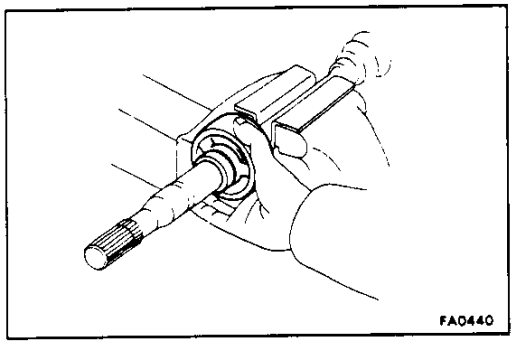

6. w/DYNAMIC DAMPER (RH DRIVE SHAFT): REMOVE DYNAMIC DAMPER

(a) Using a screwdriver, remove the clamp of the dynamic damper.

(b) Remove the dynamic damper.

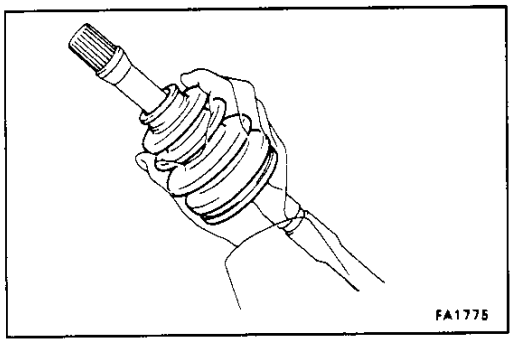

7. REMOVE OUTBOARD JOINT BOOT

(a) Using a screwdriver, remove the 2 boot clamps from the outboard joint boot.

(b) Remove the boot from the outboard joint.
NOTICE: Do not disassemble the outboard joint.

SA

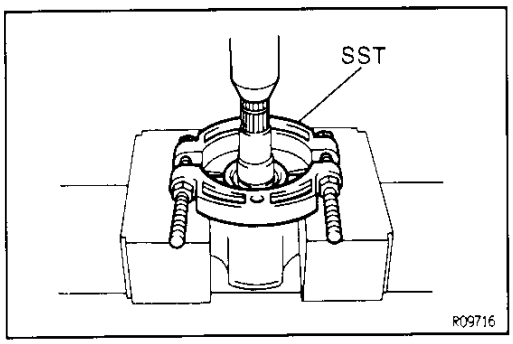

8. REMOVE DUST COVER

Using SST and press, press out the dust cover from the inboard joint tulip.
SST 09950–00020

FRONT DRIVE SHAFT ASSEMBLY

BA18U-02

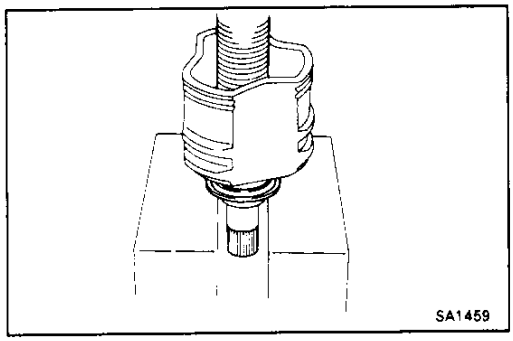

1. INSTALL NEW DUST COVER

Using a press, press in a new dust cover to the inboard joint tulip.

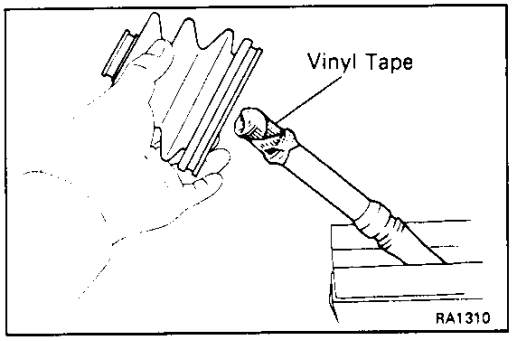

2. TEMPORARILY INSTALL BOOTS AND DAMPER (RH DRIVE SHAFT)

HINT: Before installing the outboard joint boot, wrap vinyl tape around the spline of the drive shaft to prevent damaging the boots and damper.

Downloaded from www.Manualslib.com manuals search engine

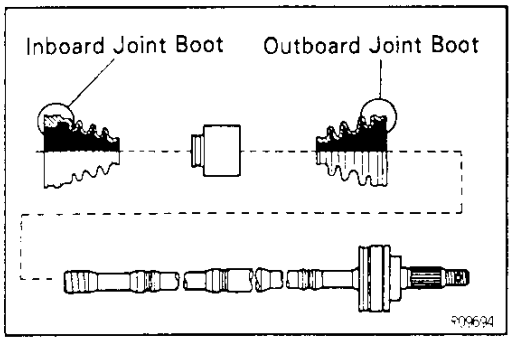

(a) Temporarily install a new outboad joint boot to the drive shaft.
(b) w/ Dynamic damper:
Temporarily install the dynamic damper to the drive shaft.
(c) Temporarily install a new inboad joint boot to the drive shaft.

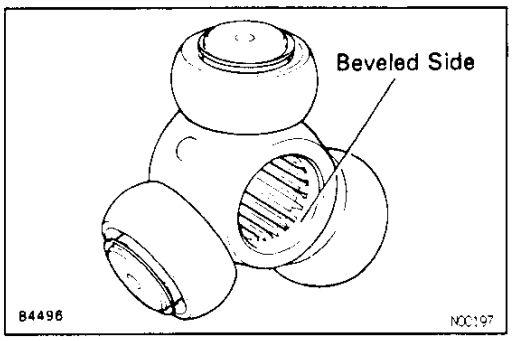

3. INSTALL TRIPOD JOINT

(a) Place the beveled side of the tripod joint axial spline toward the outboard joint.

SA

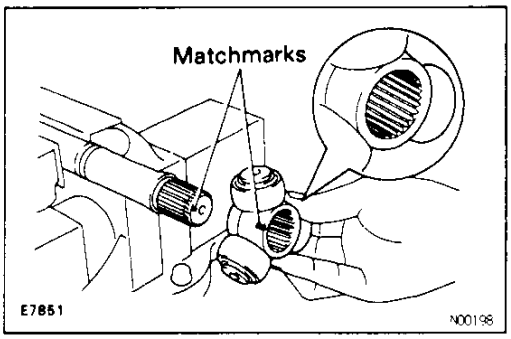

(b) Align the matchmarks placed before removal.

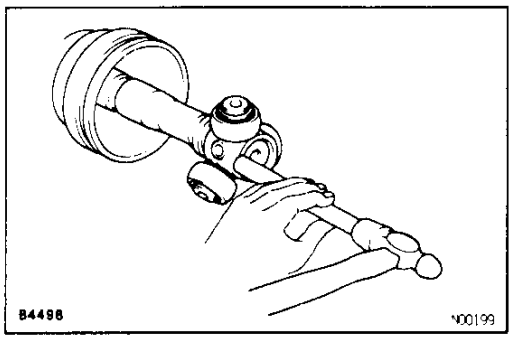

(c) Using a brass bar and hammer, tap in the tripod joint to the drive shaft.
NOTICE: Do not tap the roller.

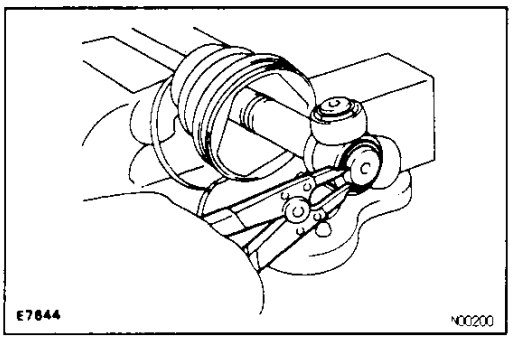

(d) Using a snap ring expander, install a new snap ring.

Downloaded from www.Manualslib.com manuals search engine

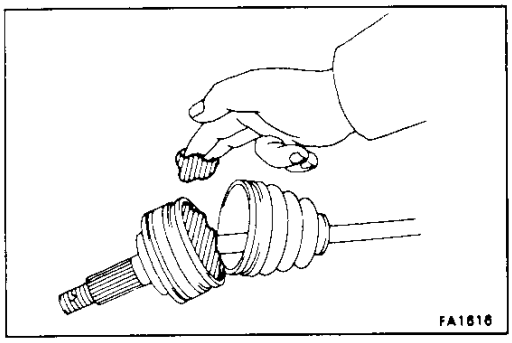

4. INSTALL BOOT TO OUTBOARD JOINT

Before assembling the boot, fill grease into the outboard joint and boot.

HINT: Use the grease supplied in the boot kit.

Grease capacity (Color = Black):

120–130 g (4.2–4.6 oz.)

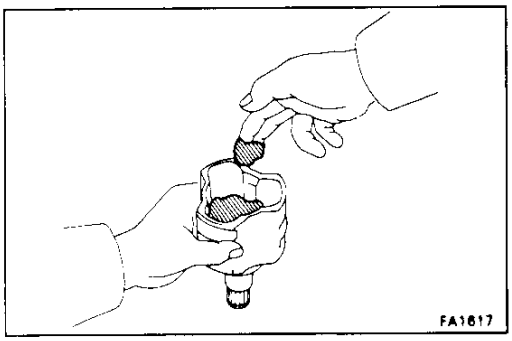

5. INSTALL INBOARD JOINT TULIP TO FRONT DRIVE SHAFT

(a) Pack in grease to the inboard joint tulip and boot.

HINT: Use the grease supplied in the boot kit.

Grease capacity (Color = Yellow ocher):

180–190 g (6.3–6.7 oz.)

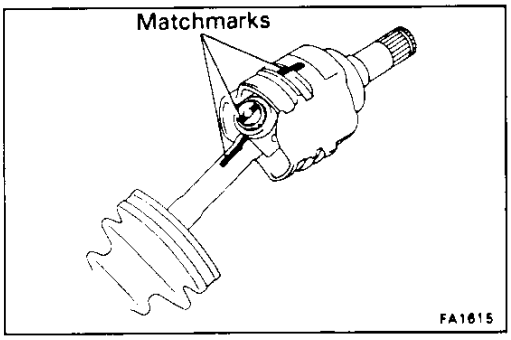

(b) Align the matchmarks placed before disassembly.

(c) Install the inboard joint tulip to the drive shaft.

(d) Temporarily install the boot to the inboard joint tulip.

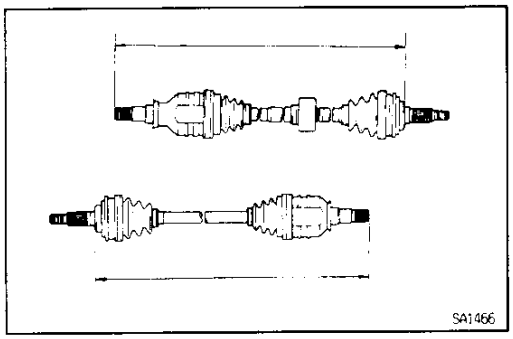

6. ASSEMBLY BOOT CLAMPS TO BOTH BOOTS

(a) Be sure the boots are on the shaft groove.

(b) Set the drive shaft length to the standard.

Standard length:

LH shaft

559.2 ± 5.0 mm (22.016 ± 0.197 in.)

RH shaft

854.9 ± 5.0 mm (33.657 ± 0.197 in.)

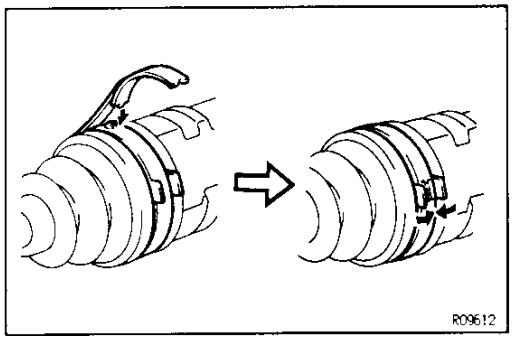

(c) Using a screwdriver, bend the band and lock it, as shown in the illustration.

Downloaded from www.Manualslib.com manuals search engine

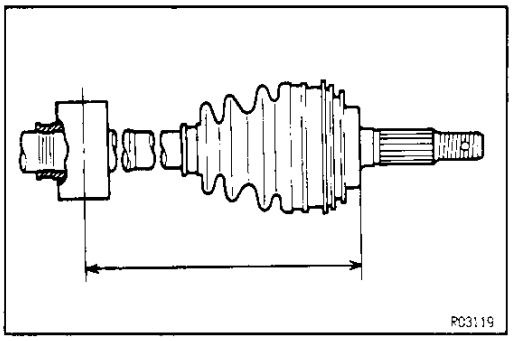

7. RH DRIVE SHAFT:
ASSEMBLY DAMPER CLAMP

(a) Be sure the damper clamp is on the shaft groove.

(b) Check the distance, as shown.

Distance:

418.0 mm ± 5.0 mm (16.461 ± 0.197 in.)

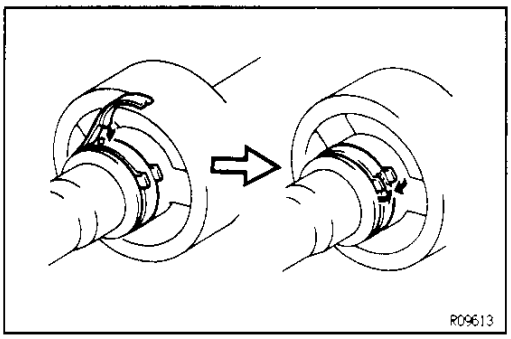

(c) Using a screwdriver, bend the band and lock it as shown in the illustration.

SA

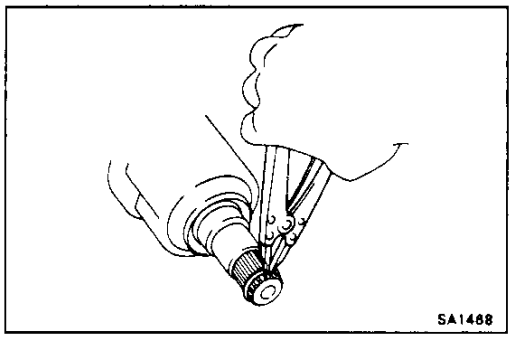

FRONT DRIVE SHAFT INSTALLATION

SA18V-01

1. INSTALL NEW SNAP RING

(a) Using a snap ring expander, install a new snap ring.

(b) Coat gear oil to the inboard joint tulip and differential case sliding surface.

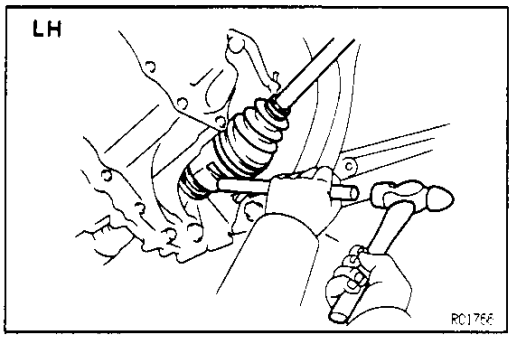

2. INSTALL DRIVE SHAFT

LH DRIVE SHAFT:

Using a brass bar and hammer, install the drive shaft to the transaxle.

NOTICE: Be careful not to damage the boots.

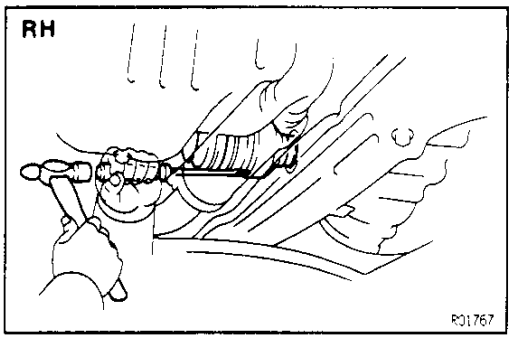

RH DRIVE SHAFT:

Using a screwdriver and hammer, install the drive shaft to the transaxle.

NOTICE: Be careful not to damage the boots.

3. CHECK INSTALLATION OF FRONT DRIVE SHAFT

(a) Check that there is 2—3mm (0.08—0.12in.) of play in axial direction.

(b) Check that the drive shaft will not come out by trying to pull it completely out by hand.

Downloaded from www.Manualslib.com manuals search engine

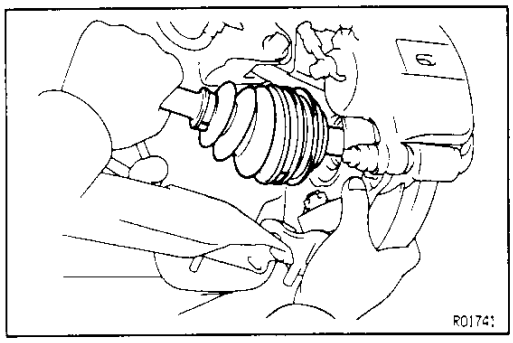

4. CONNECT DRIVE SHAFT TO AXLE HUB

Install the outboard joint side of the drive shaft to the axle hub.

NOTICE: Be careful not to damage the inner oil seal, boots and ABS speed sensor rotor.

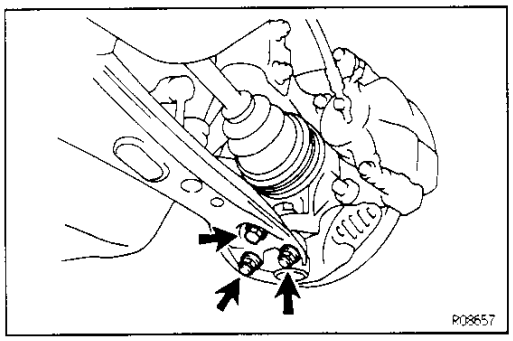

5. CONNECT LOWER BALL JOINT TO LOWER ARM

Connect the lower ball joint to the lower arm and tighten the bolt and 2 nuts.

Torque: 127 N·m (1,300 kgf·cm, 94 ft·lbf)

SA

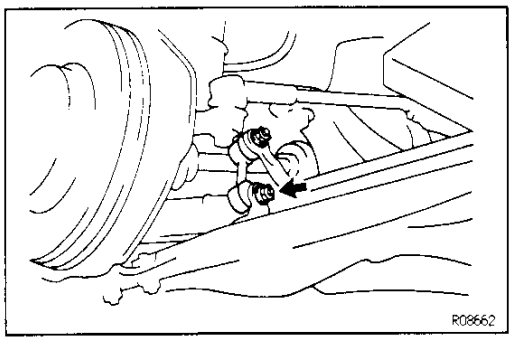

6. CONNECT STABILIZER BAR LINK TO LOWER ARM

Torque: 44 N·m (450 kgf·cm, 33 ft·lbf)

HINT: If the ball joint stud turns together with the nut, use a hexagon wrench to hold the stud.

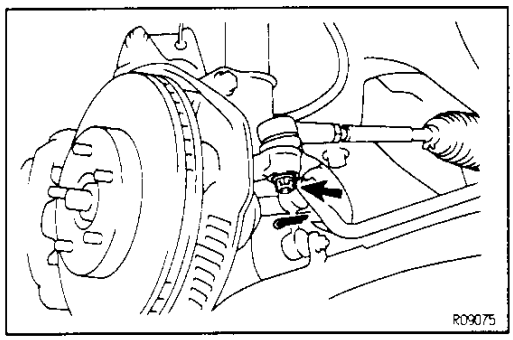

7. CONNECT TIE ROD END TO STEERING KNUCKLE

(a) Connect the tie rod end to steering knuckle and tighten the nut.

Torque: 49 N·m (500 kgf·cm, 36 ft·lbf)

(b) Install a new cotter pin.

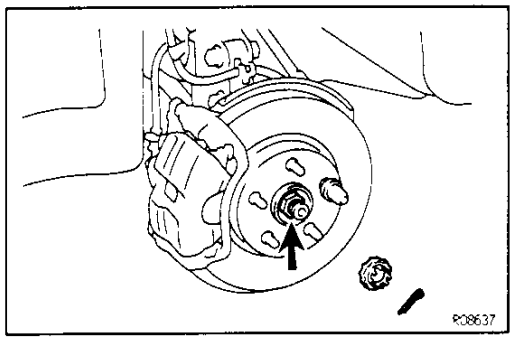

8. INSTALL DRIVE SHAFT LOCK NUT

(a) Tighten the lock nut.

Torque: 216 N·m (2,200 kgf·cm, 159 ft·lbf)

(b) Install the lock cap and a new cotter pin.

Downloaded from www.Manualslib.com manuals search engine

9. FILL TRANSAXLE WITH GEAR OIL (M/T) OR ATF (A/T)
10. INSTALL ENGINE UNDER COVERS
11. INSTALL FRONT WHEEL AND LOWER VEHICLE
    Torque: 103 N·m (1,050 kgf·cm, 76 ft·lbf)
12. CHECK AND ADJUST FRONT WHEEL ALIGNMENT
    (See page SA–7)
13. w/ ABS:
    CHECK ABS SPEED SENSOR SIGNAL
    (See page BR–93)

Downloaded from www.Manualslib.com manuals search engine

FRONT SUSPENSION
(Super Strut Type)

DESCRIPTION

SA02P-06

The super strut type suspension fitted on the models using the 3S–GE engine is similar in form to the MacPherson type. The super strut type suspension has greater geometric freedom than the double wishbone type, and thus exerts less camber fluctuation against the ground.The body can be shared by the conventional MacPherson type.

SA

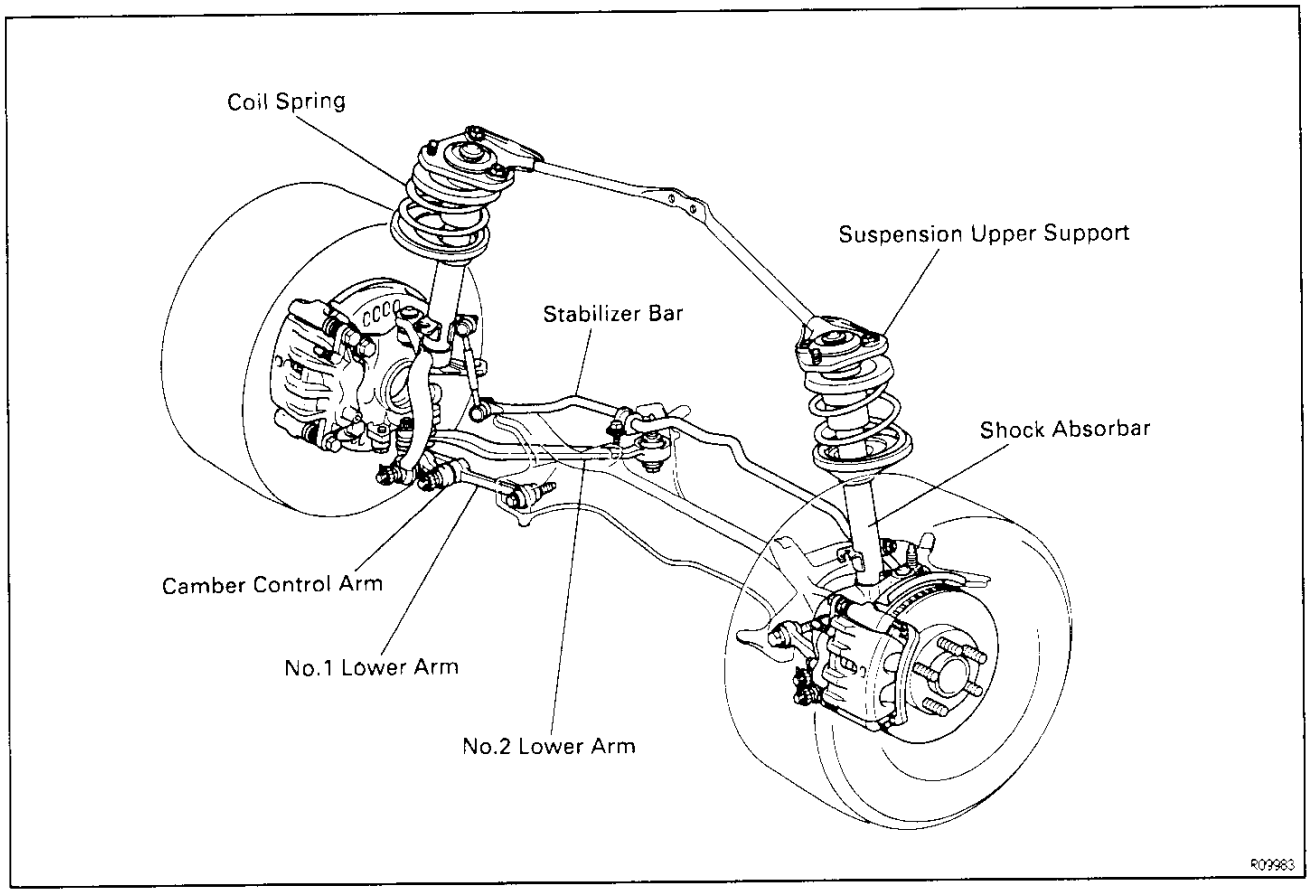

Downloaded from www.Manualslib.com manuals search engine

PREPARATION

SST (SPECIAL SERVICE TOOLS)

SA020-0F

	09506-35010	Differential Drive Pinion Rear Bearing Replacer	
	09608-35014	Axle Hub & Drive Pinion Bearing Tool Set	
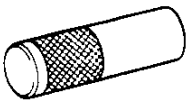	(09608-06040)	Front Hub Inner Bearing Cone Replacer	
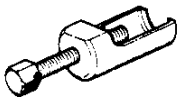	09610-20012	Pitman Arm Puller	
	09628-62011	Ball Joint Puller	
	09727-30020	Coil Spring Compressor	
	09729-22031	Front Spring Upper Seat Holder	

RECOMMENDED TOOLS

SA028-03

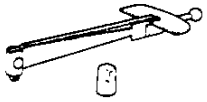	09025-00010	Small Torque Wrench	

EQUIPMENT

SA028-03

Torque wrench	

SA

Downloaded from www.Manualslib.com manuals search engine

FRONT SHOCK ABSORBER
COMPONENTS

SA02T-07

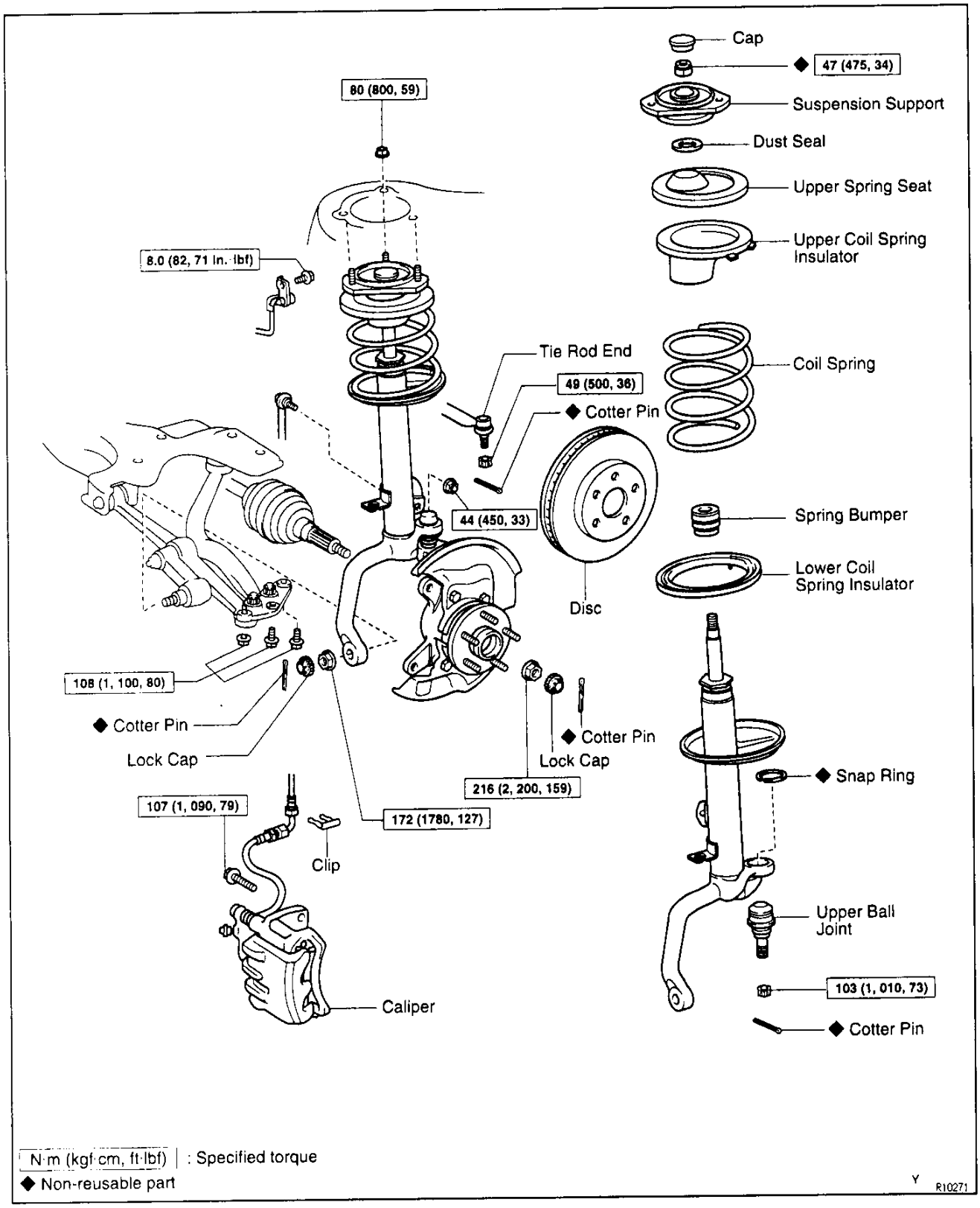

SA

Downloaded from www.Manualslib.com manuals search engine

SA0E8-02

SHOCK ABSORBER WITH STEERING KNUCKLE REMOVAL

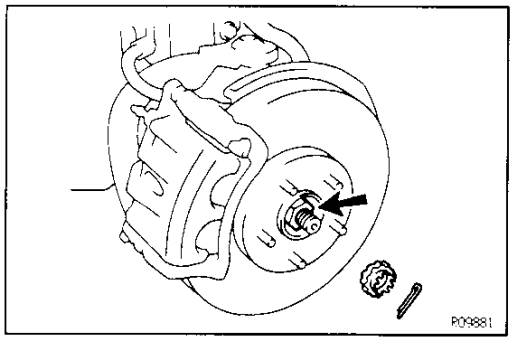

1. JACK UP VEHICLE AND REMOVE FRONT WHEEL

2. REMOVE DRIVE SHAFT LOCK NUT

(a) Remove the cotter pin and lock cap.

(b) While applying the brakes, remove the nut.

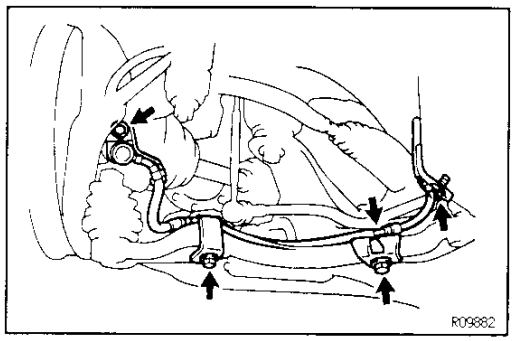

3. w/ ABS:
REMOVE ABS SPEED SENSOR

Remove the ABS speed sensor from the steering knuckle.

SA

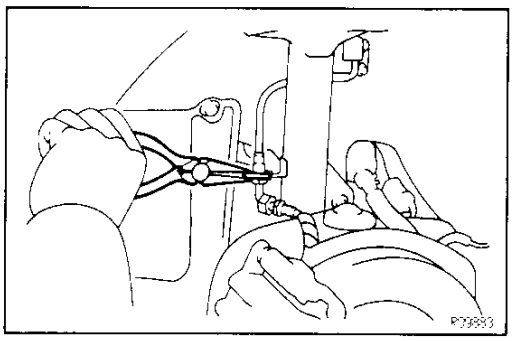

4. DISCONNECT BRAKE HOSE FROM SHOCK ABSORBER

(a) Remove the clip from the brake bracket.

(b) Pull off the brake hose from the shock absorber.

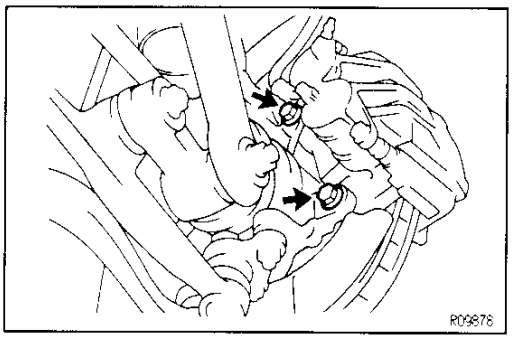

5. REMOVE BRAKE CALIPER

(a) Remove the 2 brake caliper set bolts.

(b) Suspend the brake caliper securely.

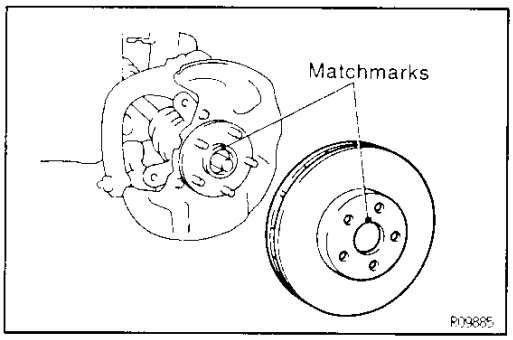

(c) Place matchmarks on the disc and axle hub.

(d) Remove the disc.

Downloaded from www.Manualslib.com manuals search engine

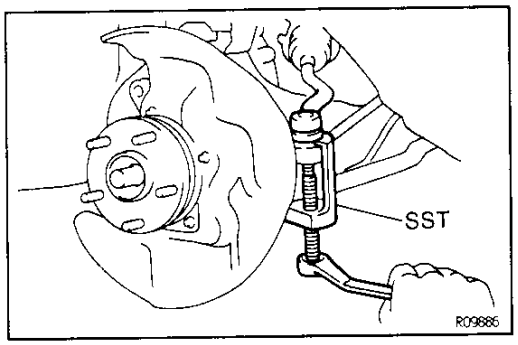

6. DISCONNECT TIE ROD END

(a) Remove the cotter pin and remove the nut.

(b) Using SST, disconnect the tie rod end from the steering knuckle.
SST 09610–20012

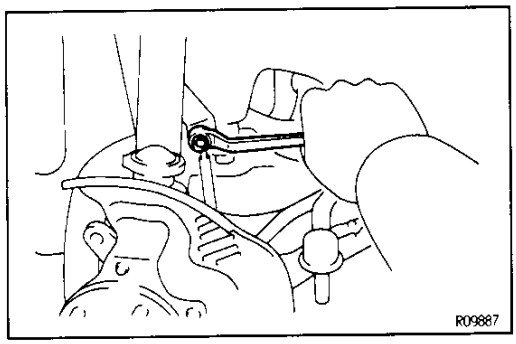

7. DISCONNECT STABILIZER BAR LINK

Remove the nut and disconnect the stabilizer bar link from shock absorber.
HINT: If the ball joint stud turns together with the nut, use a hexagon wrench to hold the stud.

SA

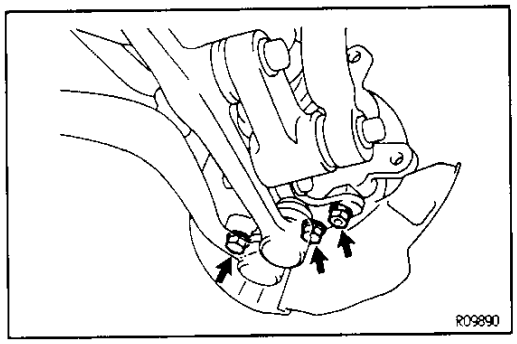

8. DISCONNECT LOWER BALL JOINT ATTACHMENT

Remove the nut and 2 bolts and disconnect the lower ball joint attachment from steering knuckle.

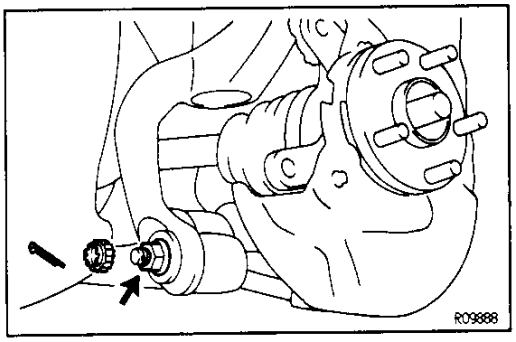

9. DISCONNECT CAMBER CONTROL ARM

(a) Remove the cotter pin, lock cap and remove the nut.

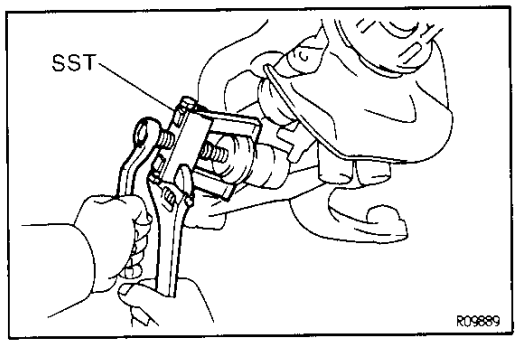

(b) Using SST, disconnect the camber control arm from shcck absorber.
SST 09628–62011

Downloaded from www.Manualslib.com manuals search engine

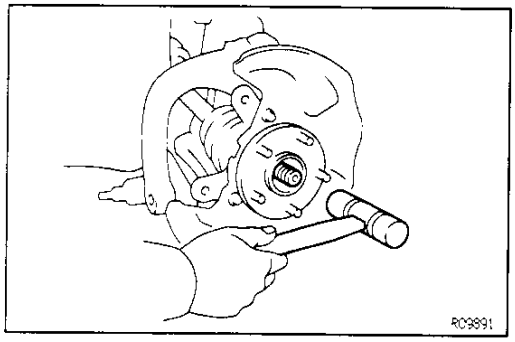

10. DISCONNECT DRIVE SHAFT

(a) Using a plastic hammer, disconnect the drive shaft from the axle hub.
NOTICE: Cover the drive shaft boot with cloth to protect it from damage.

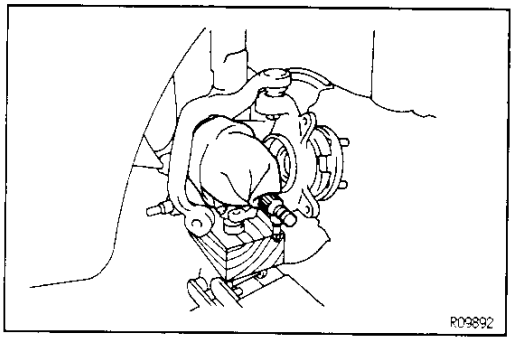

(b) Place wooden block on the jack and support the lower ball joint attchment.

SA

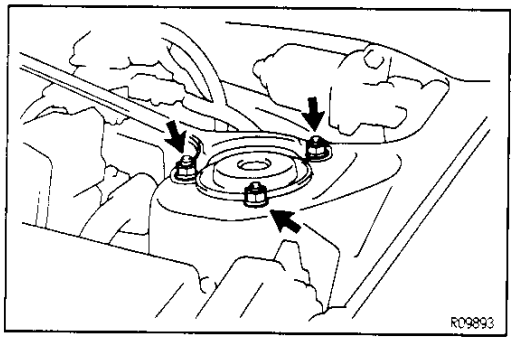

11. REMOVE SHOCK ABSORBER WITH STEERING KNUCKLE

(a) Remove the 3 nuts on upper side of the shock absorber.

(b) Remove the shock absorber with steering knuckle.

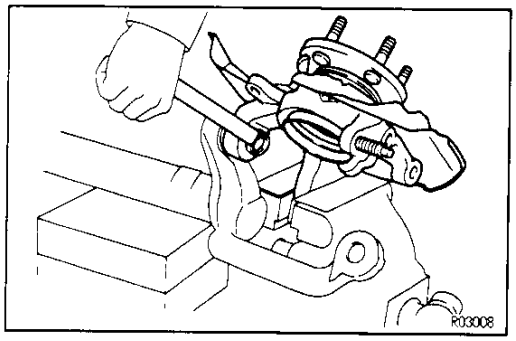

SHOCK ABSORBER WITH STEERING KNUCKLE DISASSEMBLY

SA0EC-02

DISCONNECT STEERING KNUCKLE FROM SHOCK ABSORBER

(a) Remove the cotter pin and the nut.

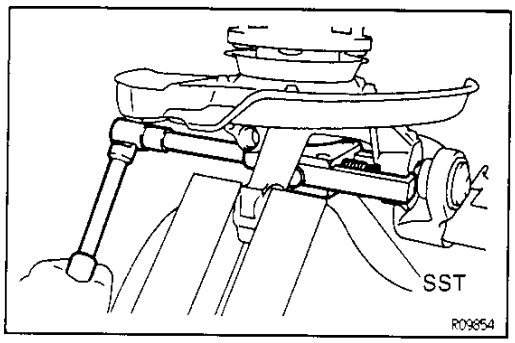

(b) Using SST, disconnect the steering knuckle from shock absorber.
SST 09628–62011

Downloaded from www.Manualslib.com manuals search engine

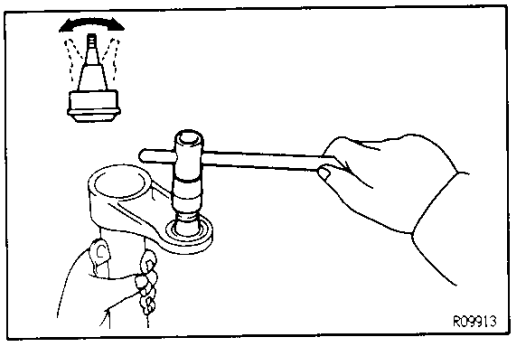

UPPER BALL JOINT INSPECTION

BAOED-02

INSPECTION BALL JOINT FOR ROTATION CONDITION

(a) As shown, flip the ball joint stud back and forth 5 times before installing the nut.

(b) Using a torque gauge, turn the nut continuously one turn every 2–4 seconds and take the torque reading on the 5th turn.

Torque:

1.0–2.9 N·m (10–30 kgf·cm, 8.7–26 in.·lbf)

SA

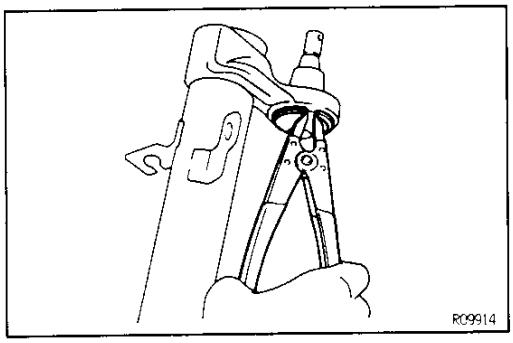

UPPER BALL JOINT REMOVAL

BAOEE-02

REMOVE UPPER BALL JOINT

(a) Using a snap ring expander, remove the snap ring.

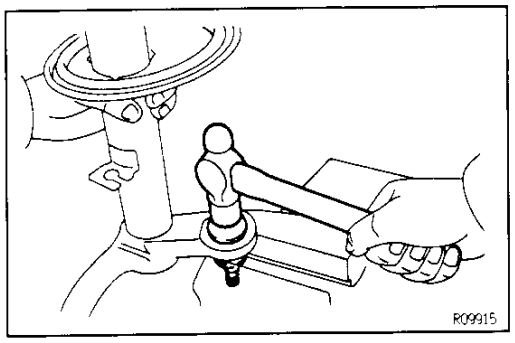

(b) Using a vise and a hammer, remove the upper ball joint form shock absorber.

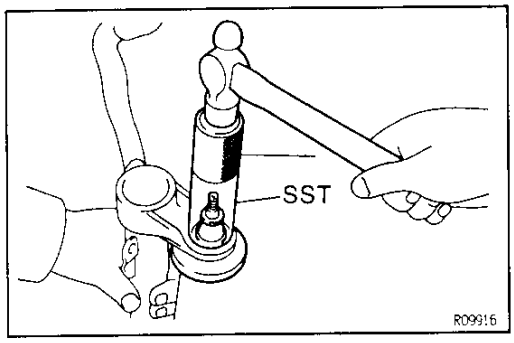

UPPER BALL JOINT INSTALLATION

BAOEF-02

INSTALL UPPER BALL JOINT

(a) Using SST and a hammer, install a new upper ball joint.

SST 09506–35010, 09608–35014 (09608–06040)

Downloaded from www.Manualslib.com manuals search engine

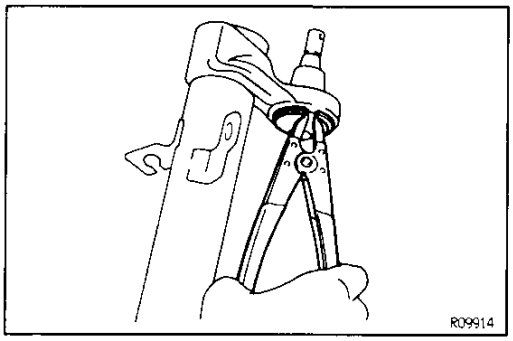

(b) Using a snap ring expander, install a new snap ring.

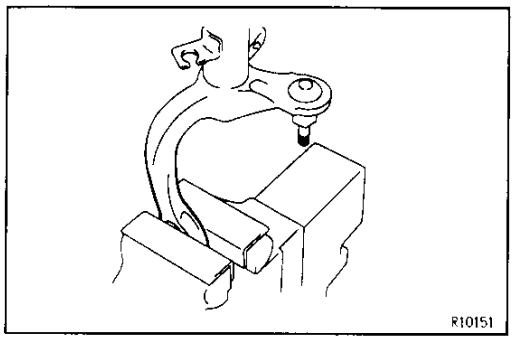

SA

FRONT SHOCK ABSORBER DISASSEMBLY

SA0EQ-02

REMOVE COIL SPRING

(a) Install the bracket at the lower portion of the shock absorber and and secure it in a vise.

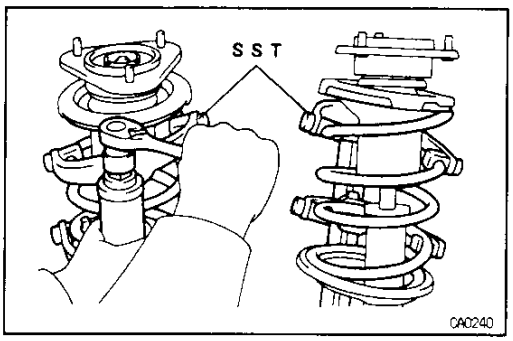

(b) Using SST, compress the coil spring.
SST 09727−30020
NOTICE: Do not use an impact wrench. It will damage the SST.

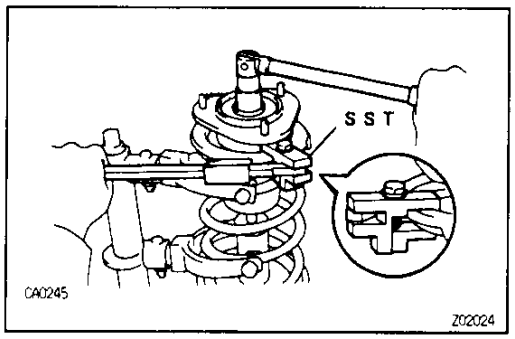

(c) Using SST to hold the spring seat, remove the nut.
SST 09729−22031

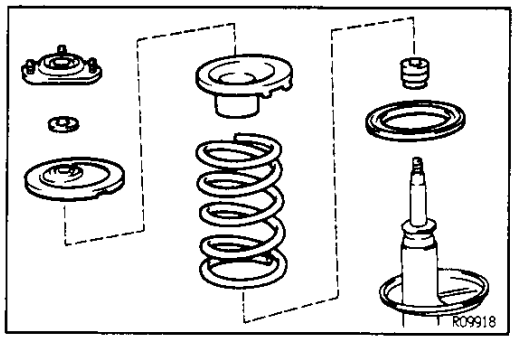

(d) Remove the following parts.
- Suspension support
- Dust seal
- Upper spring seat
- Upper coil spring insulator
- Coil spring
- Spring bumper
- Lower coil spring insulator

Downloaded from www.Manualslib.com manuals search engine

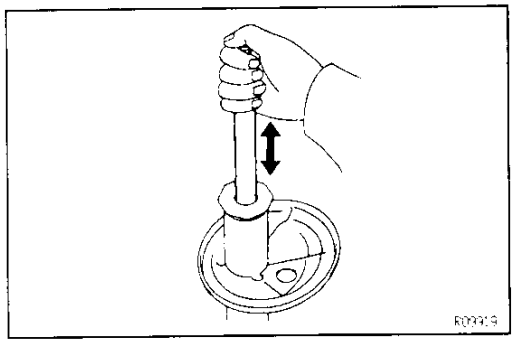

FRONT SHOCK ABSORBER INSPECTION

INSPECT SHOCK ABSORBER

Compress and extend the shock absorber rod and check that there is no abnormal resistance or unusual operation sounds.

If there is any abnormality, replace the shock absorber with a new one.

NOTICE: When discarding the shock absorber, use the following procedure.

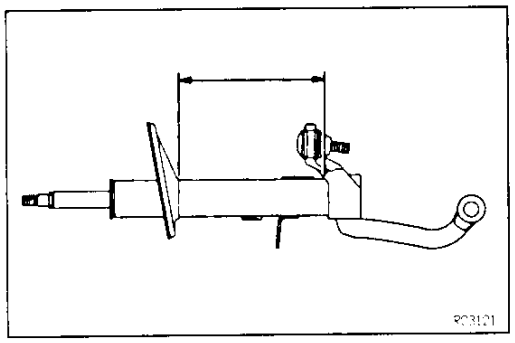

FRONT SHOCK ABSORBER DISPOSAL

1. **FULLY EXTEND SHOCK ABSORBER ROD**
2. **DRILL HOLE TO REMOVE GAS FROM CYLINDER**

   Using a drill, make a hole in the cylinder, as shown to remove the gas inside.

   CAUTION: The gas coming out is harmless, but be careful of chips which may fly up when drilling.

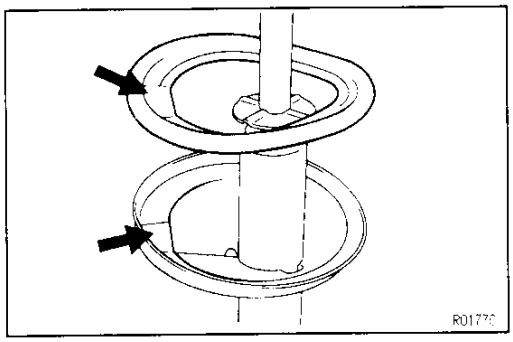

FRONT SHOCK ABSORBER ASSEMBLY

1. **INSTALL LOWER INSULATOR ONTO SHOCK ABSORBER**

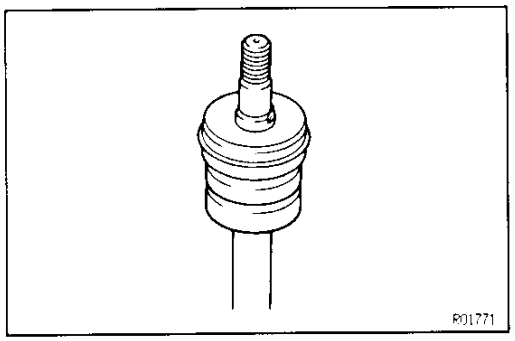

2. **INSTALL SPRING BUMPER TO PISTON ROD**

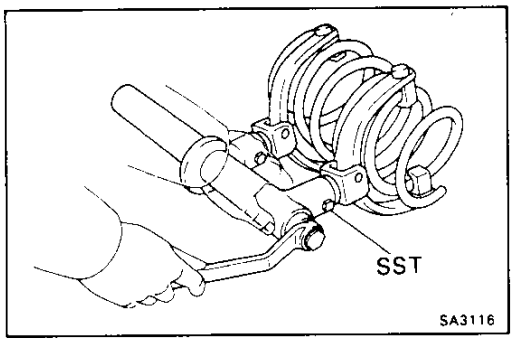

3. **INSTALL COIL SPRING AND SUSPENSION SUPPORT**

(a) Using SST, compress the coil spring.
SST 09727−30020
NOTICE: Do not use an impact wrench. It will damage the SST.

SA

Downloaded from www.Manualslib.com manuals search engine

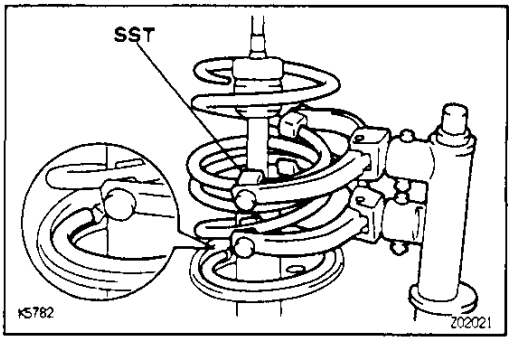

(b) Install the coil spring to the shock absorber.
HINT: Fit the lower end of the coil spring into the gap of the spring seat of shock absorber.

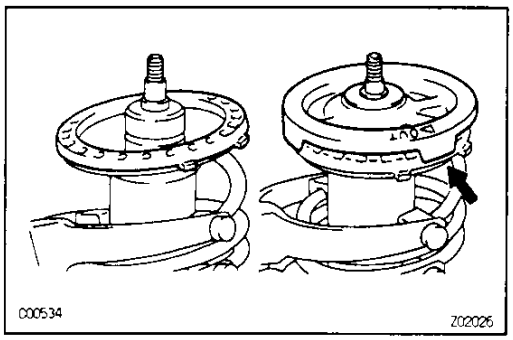

(c) Install the upper insulator.
(d) Install the upper seat.

SA

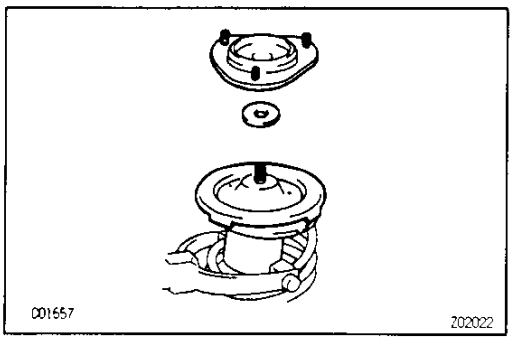

(e) Install the dust seal and suspension support.

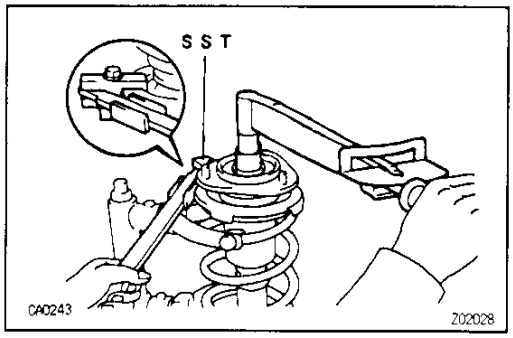

(f) Using SST to hold the spring seat, install a new nut.
SST 09729–22031
Torque: 47 N·m (475 kgf·cm, 34 ft·lbf)
(g) Remove the SST.

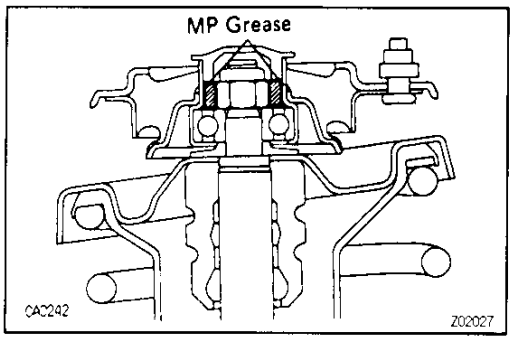

(h) Pack MP grease into the suspension support.
(i) Install the cap.

Downloaded from www.Manualslib.com manuals search engine

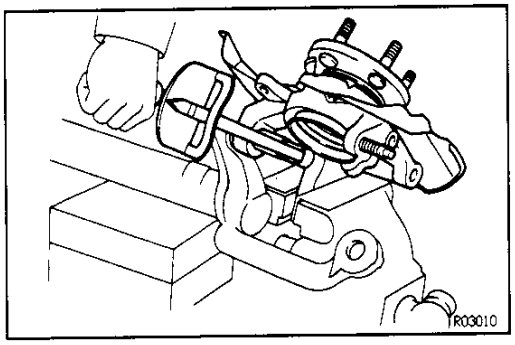

SHOCK ABSORBER WITH STEERING KNUCKLE ASSEMBLY

CONNECT SHOCK ABSORBER TO STEERING KNUCKLE

(a) Clamp the steering knuckle in a vise.

(b) Install the upper ball joint with shock absorber and tighten the nut.
Torque: 99 N·m (1,010 kgf·cm, 73 ft·lbf)

(c) Install a new cotter pin.

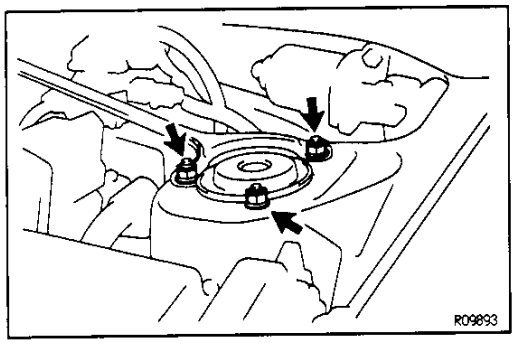

SHOCK ABSORBER WITH STEERING KNUCKLE INSTALLATION

1. **INSTALL SHOCK ABSORBER WITH STEERING KNUCKLE**
Place the shock absorber and install the 3 nut.
Torque: 80 N·m (800 kgf·cm, 59 ft·lbf)

SA

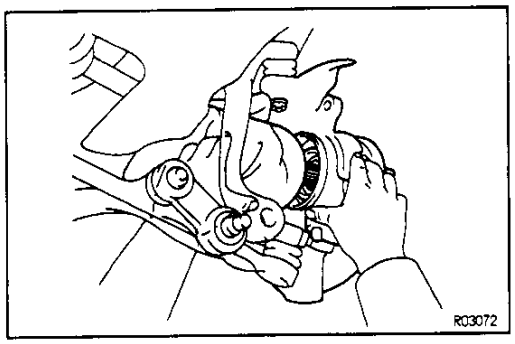

2. **CONNECT DRIVE SHAFT TO AXLE HUB**

(a) Install the drive shaft to the axle hub.

(b) Temporarily install the lock nut.
NOTICE: Be careful not to damage the boots and inner oil seal.

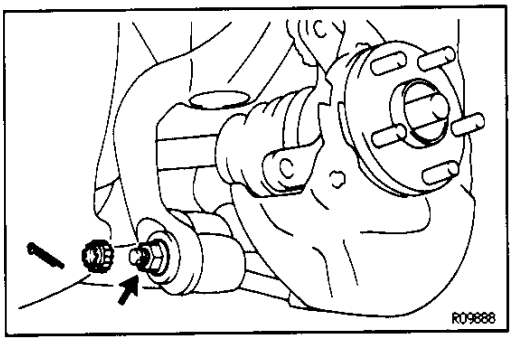

3. **CONNECT CAMBER CONTROL ARM**

(a) Connect the camber control arm to the shock absorber and tighten the nut.
Torque: 172 N·m (1,780 kgf·cm, 127 ft·lbf)

(b) Install the lock cap and a new cotter pin.

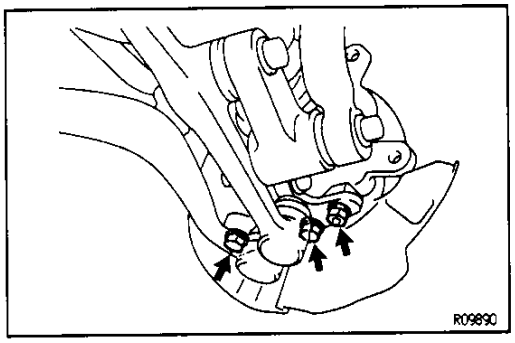

4. **CONNECT LOWER BALL JOINT ATTACHMENT**
Connect the lower ball joint attachment to the steering knuckle and tighten the 2 bolts and nut.
Torque: 108 N·m (1,100 kgf·cm, 80 ft·lbf)

Downloaded from www.Manualslib.com manuals search engine

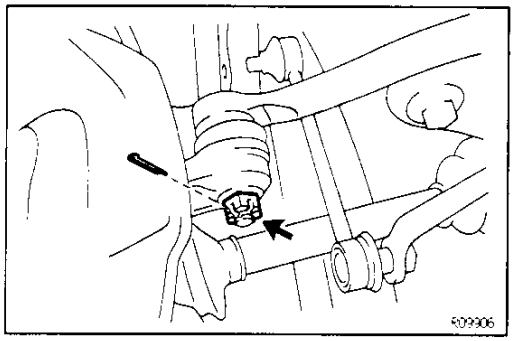

5. CONNECT TIE ROD END TO STEERING KNUCKLE

(a) Connect the tie rod end to the steering knuckle and tighten the nut.
Torque: 49 N·m (500 kgf·cm, 36 ft·lbf)

(b) Install a new cotter pin.

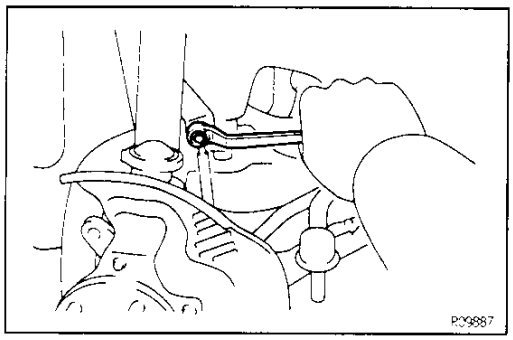

SA

6. INSTALL STABILIZER BAR LINK

Connect the stabilizer bar link and tighten the nut.
Torque: 44 N·m (450 kgf·cm, 33 ft·lbf)

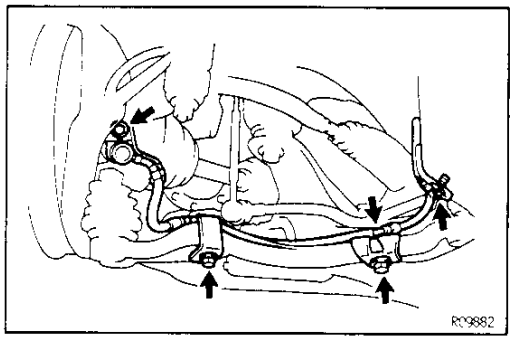

7. w/ ABS:
INSTALL ABS SPEED SENSOR

Torque:

ABS speed sensor:	**8.0 N·m (82 kgf·cm, 71 in.·lbf)**
Wire clamp:	**5.0 N·m (51 kgf·cm, 44 in.·lbf)**

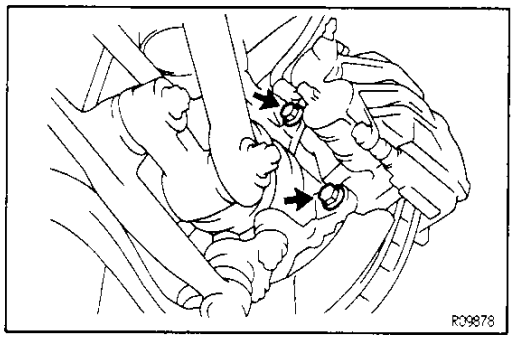

8. INSTALL FRONT BRAKE CALIPER

(a) Install the disc.

(b) Install the brake caliper.
Torque: 107 N·m (1,090 kgf·cm, 79 ft·lbf)

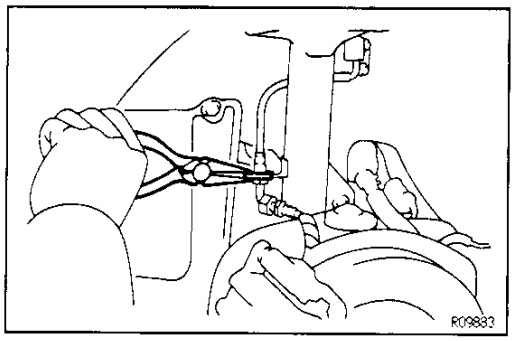

9. INSTALL BRAKE HOSE

(a) Run the brake line through the brake hose bracket.

(b) Using pliers, install the clip.

Downloaded from www.Manualslib.com manuals search engine

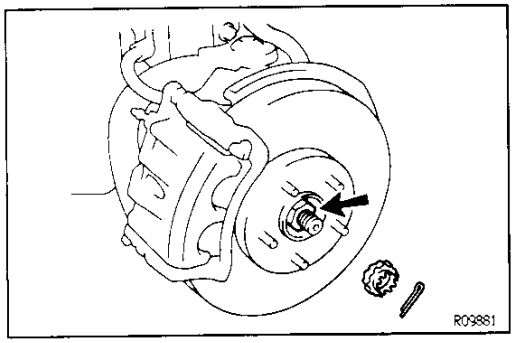

10. INSTALL DRIVE SHAFT LOCK NUT

(a) While applying the brakes, install the nut.
Torque: 216 N·m (2,200 kgf·cm, 159 ft·lbf)

(b) Install the lock cap and a new cotter pin.

11. INSTALL FRONT WHEEL AND LOWER VEHICLE
Torque: 103 N·m (1,050 kgf·cm, 76 ft·lbf)

12. CHECK FRONT WHEEL ALIGHMENT
(See page SA—5)

13. w/ ABS:
CKECK ABS SPEED SENSOR SIGNAL
(See page BR—93)

Downloaded from www.Manualslib.com manuals search engine

LOWER SUSPENSION ARM WITH BALL JOINT

COMPONENTS

SA02W-07

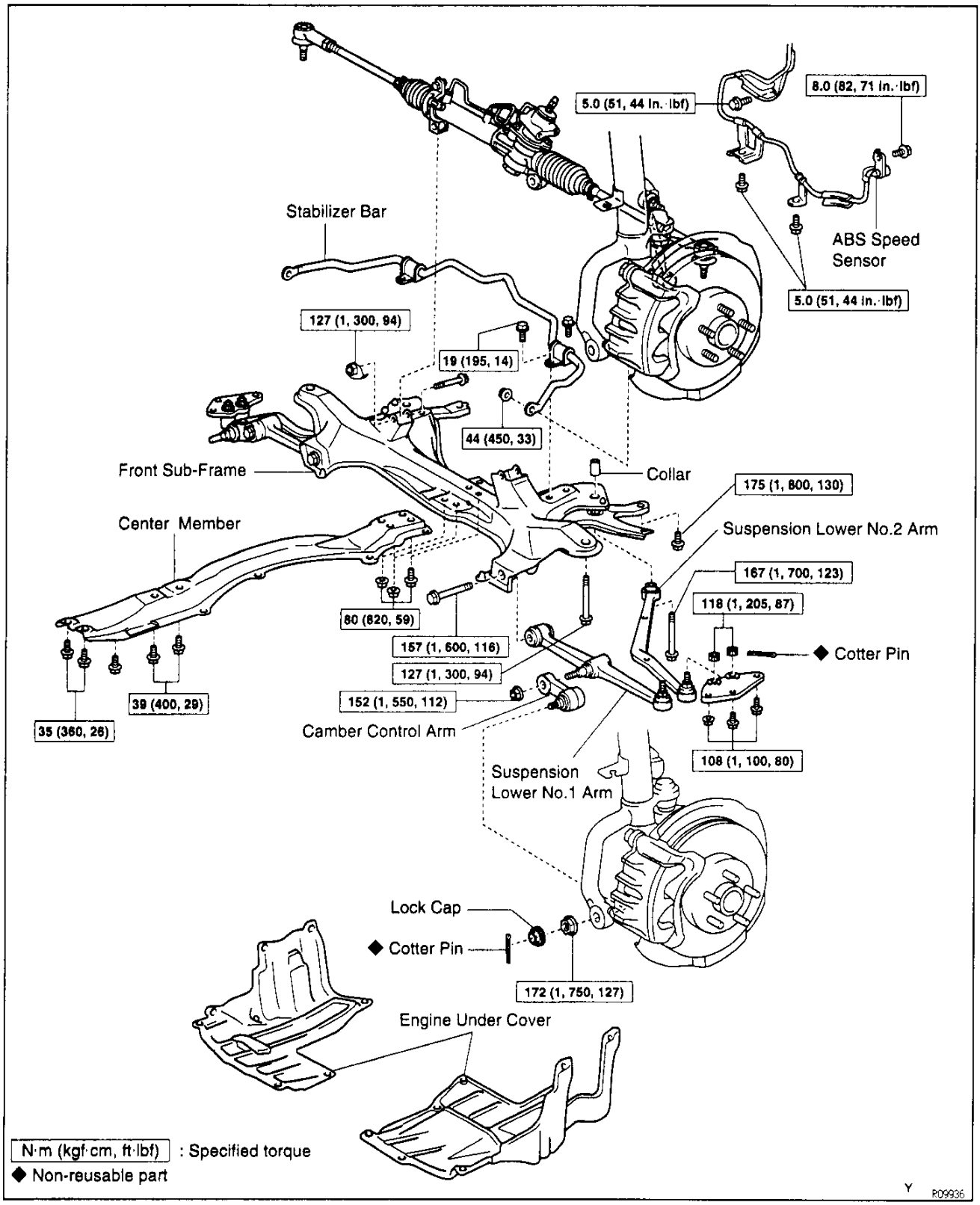

Downloaded from www.Manualslib.com manuals search engine

SA1DG-01

LOWER ARM REMOVAL

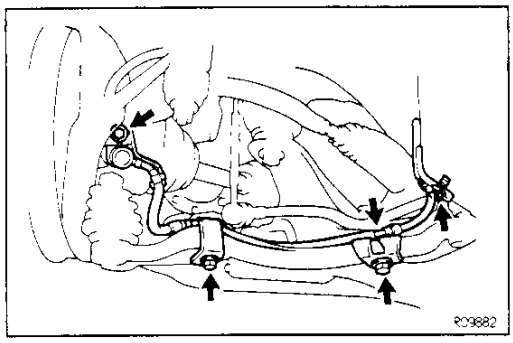

1. **JACK UP VEHICLE AND REMOVE FRONT WHEEL**
2. **REMOVE ENGINE UNDER COVERS**
3. **w/ ABS:**
   REMOVE ABS SPEED SENSOR
   Remove the ABS speed sensor from the steering knuckle.

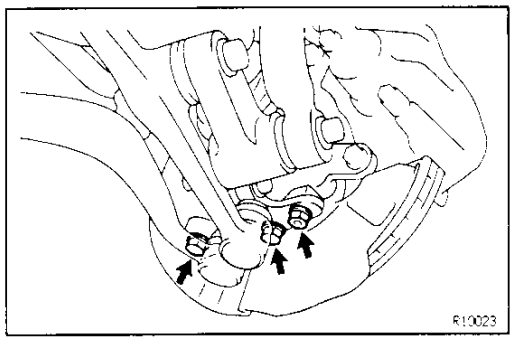

4. **DISCONNECT LOWER BALL JOINT ATTACHMENT**
   (a) Remove the nut and 2 bolts.
   (b) Disconnect the lower ball joint attachment from axle.

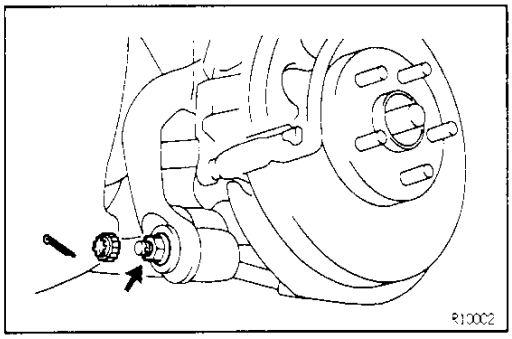

5. **DISCONNECT CAMBER CONTROL ARM**
   (a) Remove the cotter pin and lock cap, remove the nut.

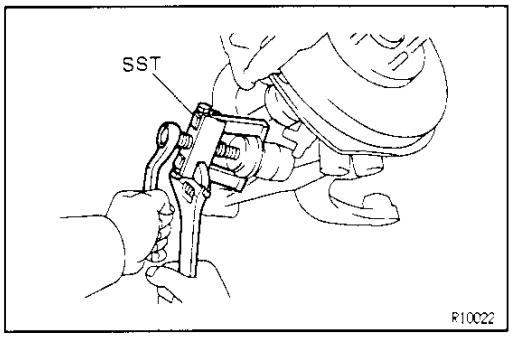

   (b) Using SST, disconnect the camber control arm from shock absorber.
   SST 09628-62011

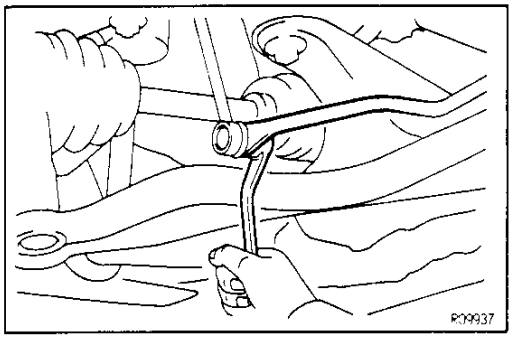

6. **DISCONNECT STABILIZER BAR LINK FROM STABILIZER**
   (a) Remove the nut and disconnect the stabilizer bar link from stabilizer.
   HINT: If the ball joint stud turns together with the nut, use a hexagon wrench to hold the stud.

Downloaded from www.Manualslib.com manuals search engine

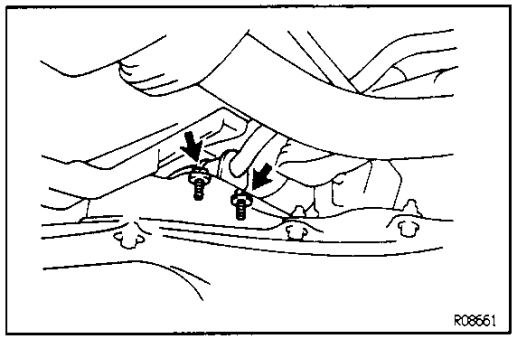

(b) Remove both the stabilizer bar bushing retainer set bolts and remove the stabilizer bar.

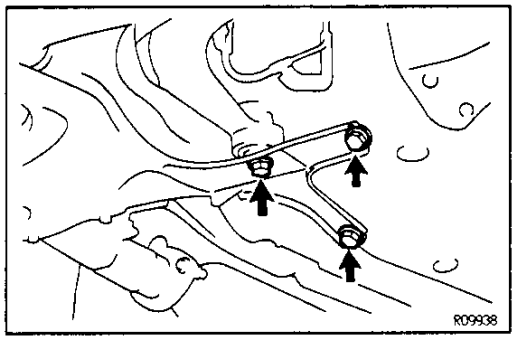

7. REMOVE 3 BOLTS

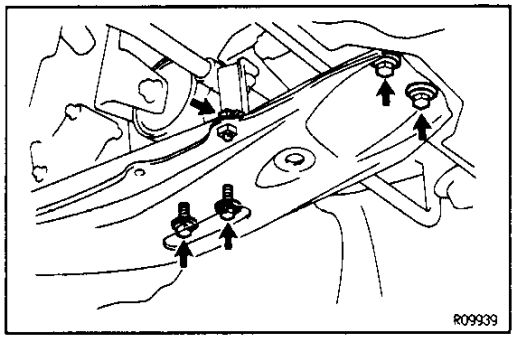

8. REMOVE FRONT SUB—FRAME

(a) Support the transaxle with a jack.

(b) Remove the 5 bolts from center member.

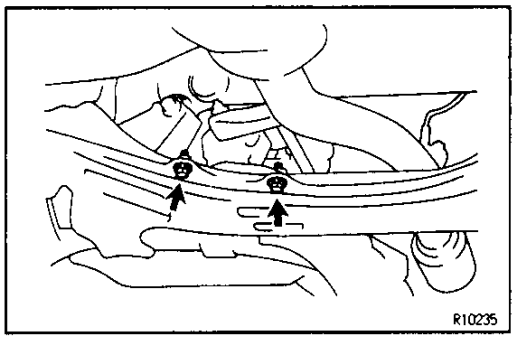

(c) Remove the 2 exhaust pipe support bracket set bolts.

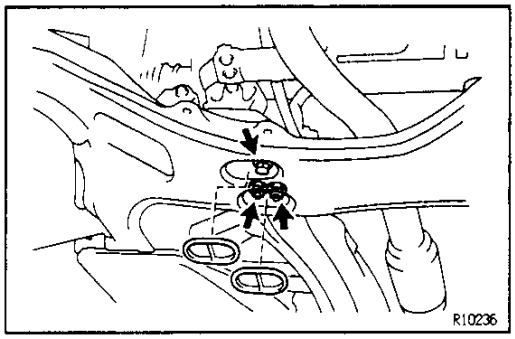

(d) Remove the 2 grommets and the center member set bolt.

(e) Remove the 2 center member set nuts and disconnect the center member.

Downloaded from www.Manualslib.com manuals search engine

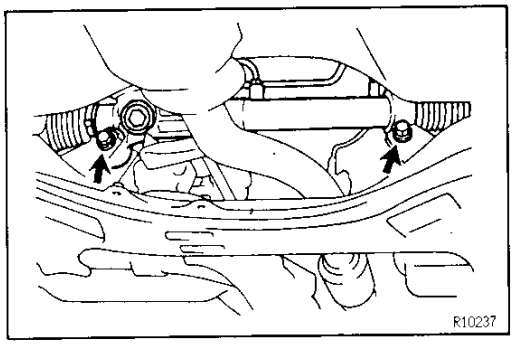

(f) Remove the 2 power steering gear assembly set bolts and nuts.

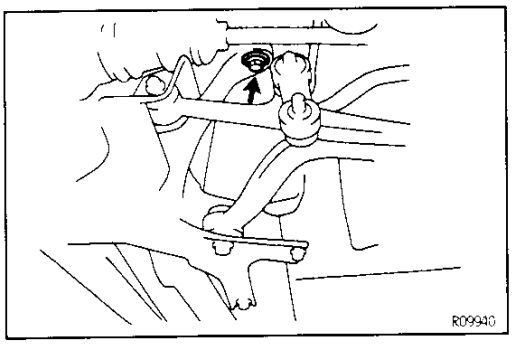

(g) Support the front sub–frame with a jack.
(h) Remove the 2 bolts and lower the front sub–frame with lower arms.

SA

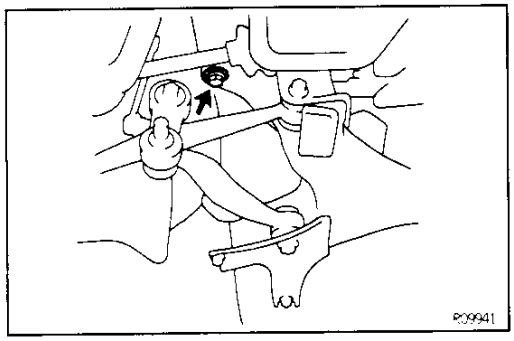

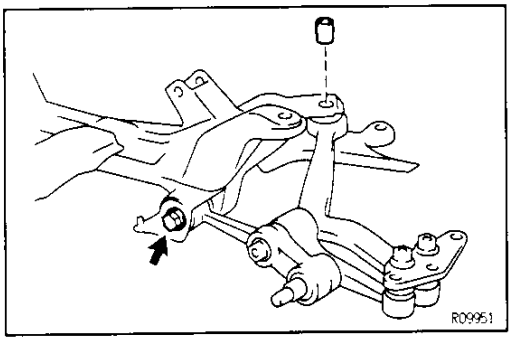

9. REMOVE LOWER ARM

(a) Remove the bolt and disconnect the lower arm.
(b) Remove the collar.
(c) Remove the lower arm.

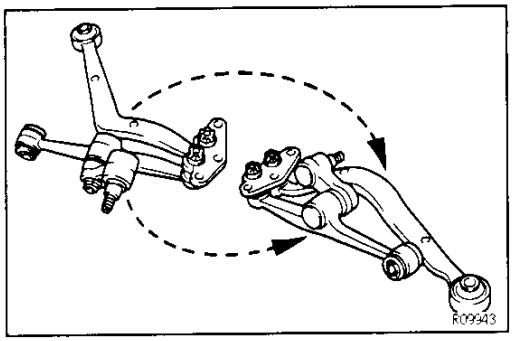

LOWER ARM AND CAMBER CONTROL ARM INSPECTION

SA1DH-01

1. DISCONNECT CAMBER CONTROL ARM FROM LOWER NO.1 ARM

(a) Rearrange the lower arm, as shown.

Downloaded from www.Manualslib.com manuals search engine

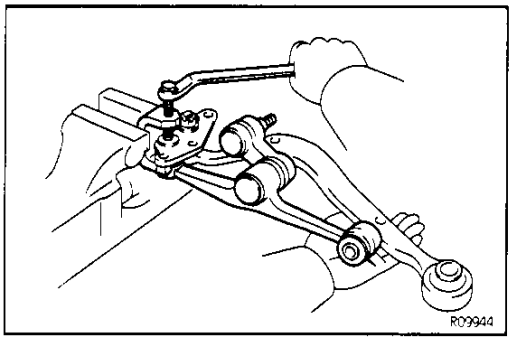

(b) Remove the cotter pin, lock cap and nut.
(c) Using SST, disconnect the lower ball joint attachment from lower No.1 arm.
SST 09628–62011

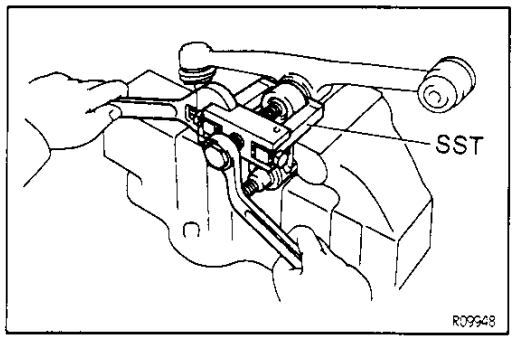

(d) Remove the cotter pin, lock cap and nut.
(e) Using SST, disconnect the camber control arm from lower No.1 arm.
SST 09628–62011

SA

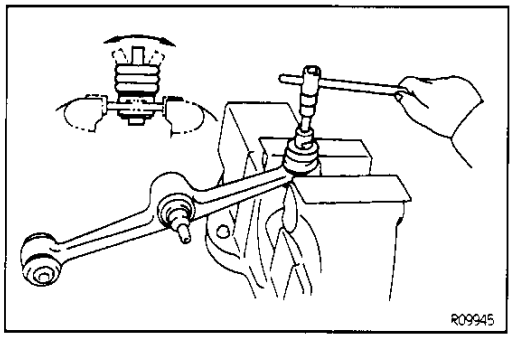

2. INSPECT LOWER NO.1 ARM BALL JOINT

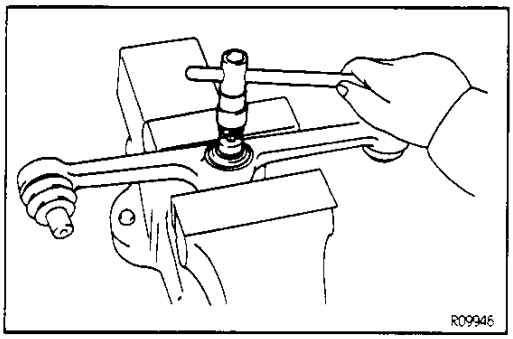

Rotate ball joint arm in all directions. If the movement is not smooth and free, replace the lower No.1 arm assembly.

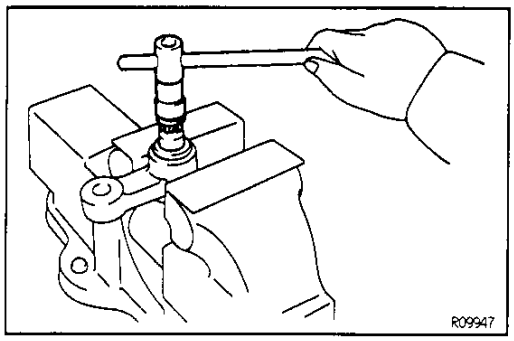

3. INSPECT CAMBER CONTROL ARM BALL JOINT
Rotate ball joint arm in all directions. If the movement is not smooth and free, replace the camber control arm assembly.

Downloaded from www.Manualslib.com manuals search engine

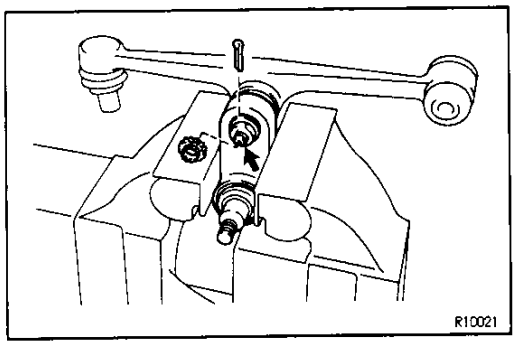

4. CONNECT CAMBER CONTROL ARM TO LOWER NO.1 ARM

(a) Tighten the nut.
Torque: 152 N·m (1,550 kgf·cm, 112 ft·lbf)

(b) Install the lock cap and a new cotter pin.

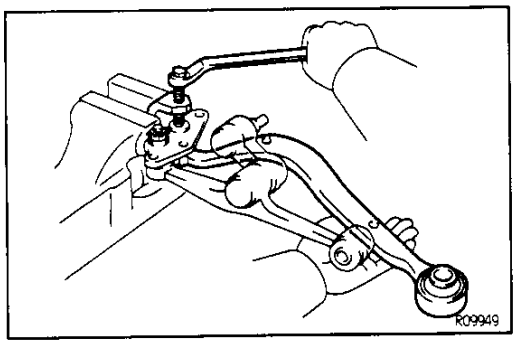

5. DISCONNECT LOWER BALL JOINT ATTACHMENT FROM LOWER NO.2 ARM

(a) Remove the cotter pin and nut.
Torque: 118 N·m (1,205 kgf·cm, 87 ft·lbf)

(b) Using SST, disconnect the lower ball joint attachment from lower No.2 arm.
SST 09628—10011

SA

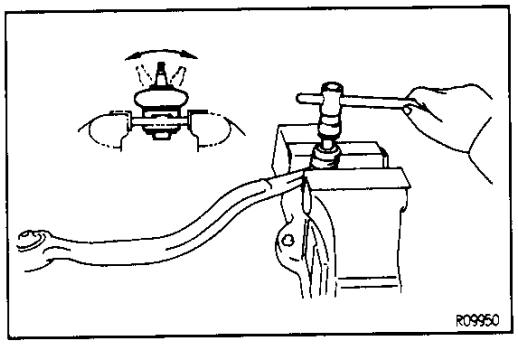

6. INSPECT LOWER NO.2 ARM BALL JOINT

Rotate ball joint arm in all directions. If the movement is not smooth and free, replace the lower No.2 arm assembly.

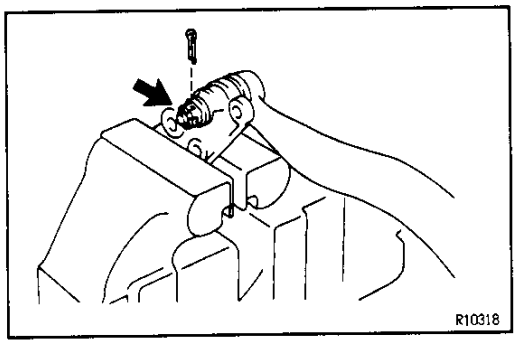

7. CONNECT LOWER BALL JOINT ATTACHMENT TO LOWER NO.2 ARM

(a) Tighten the nut.
Torque: 118 N·m (1,205 kgf·cm, 87 ft·lbf)

(b) Install a new cotter pin.

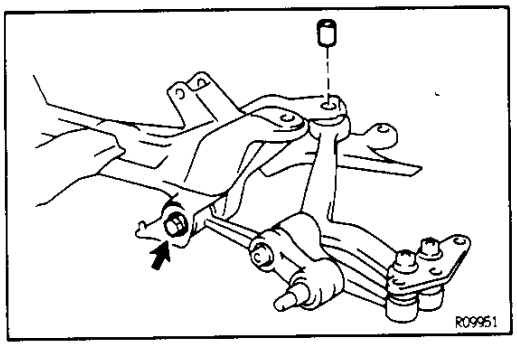

LOWER SUSPENSION ARM INSTALLATION

SA1DJ-01

1. INSTALL LOWER ARM

Install the bolt and collar.

Downloaded from www.Manualslib.com manuals search engine

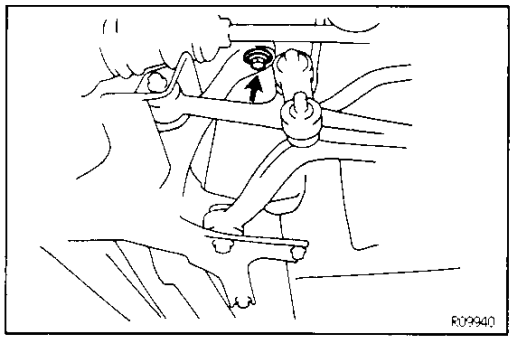

2. INSTALL FRONT SUB–FRAME

(a) Jack up the front sub–frame with lower arms.

(b) Position the front sub–frame and tighten the 2 bolts.
Torque: 127 N·m (1,300 kgf·cm, 94 ft·lbf)

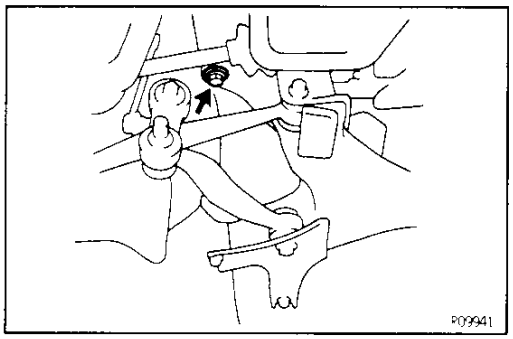

SA

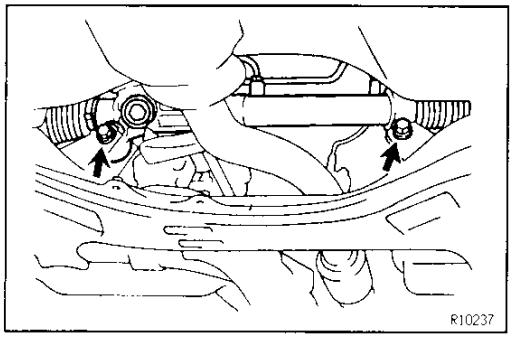

(c) Install the power steering gear assembly with 2 bolts.
Torque: 127 N·m (1,300 kgf·cm, 94 ft·lbf)

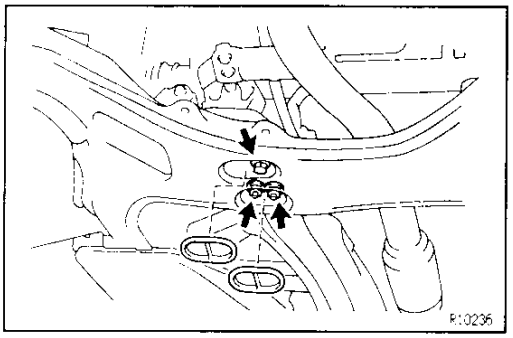

(d) Install the center member with the bolt and 2 nuts.
Torque: 80 N·m (820 kgf·cm, 59 ft·lbf)

(e) Install the 2 grommets.

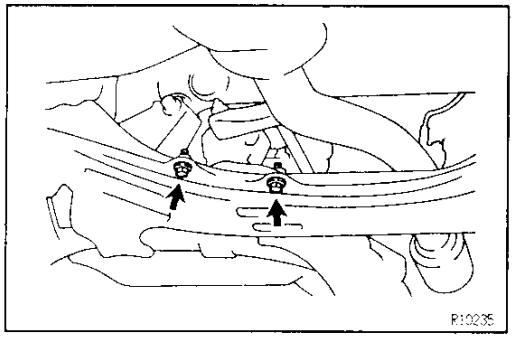

(f) Install the exhaust pipe support bracket with 2 bolts.
Torque: 19 N·m (195 kgf·cm, 14 ft·lbf)

Downloaded from www.Manualslib.com manuals search engine

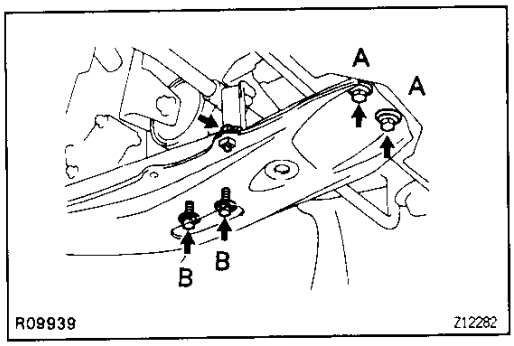

(g) Install the center member.
Torque:
A: 35 N·m (360 kgf·cm, 26 ft·lbf)
B: 39 N·m (400 kgf·cm, 29 ft·lbf)

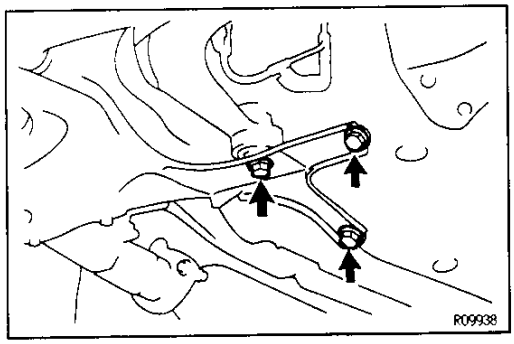

3. TEMPORARILY INSTALL 3 BOLTS

SA

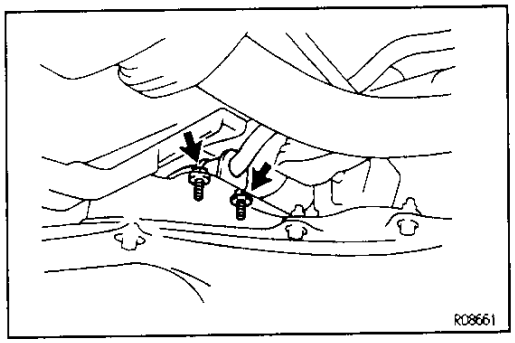

4. INSTALL STABILIZER BAR LINK

(a) Install the both stabilizer bar bushing retainers set bolts.
Torque: 19 N·m (195 kgf·cm, 14 ft·lbf)

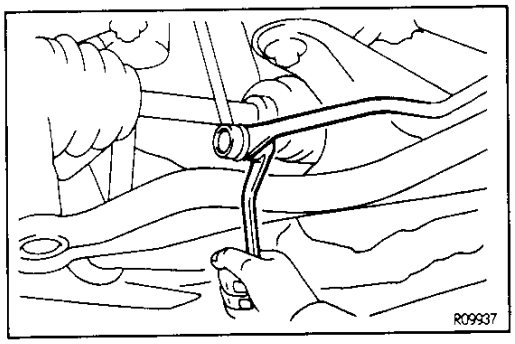

(b) Connect the stabilizer bar link and tighen the nut.
Torque: 44 N·m (450 kgf·cm, 33 ft·lbf)
HINT: If the ball joint stud turns together with the nut, use a hexagon wrench to hold the stud.

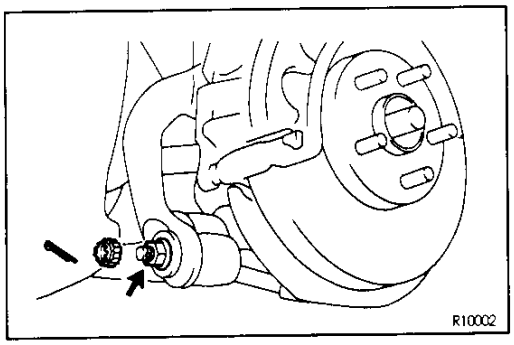

5. CONNECT CAMBER CONTROL ARM

(a) Connect the camber control arm to the shock absorber and tighen the nut.
Torque: 172 N·m (1,780 kgf·cm, 127 ft·lbf)

(b) Install the lock cap and a new cotter pin.

Downloaded from www.Manualslib.com manuals search engine

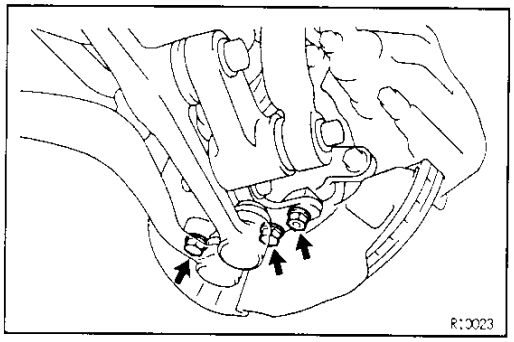

6. CONNECT LOWER BALL JOINT ATTACHMENT

Connect the lower ball joint attachment to the steering knuckle and tighten the 2 bolts and nut.

Torque: 108 N·m (1,100 kgf·cm, 80 ft·lbf)

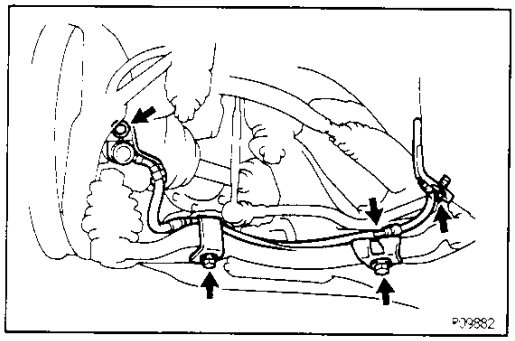

SA

7. w/ ABS:
INSTALL ABS SPEED SENSOR

Torque:

ABS speed sensor: 8.0 N·m (82 kgf·cm, 71 in.·lbf)
Wire clamp: 5.0 N·m (51 kgf·cm, 44 in.·lbf)

8. INSTALL ENGINE UNDER COVER

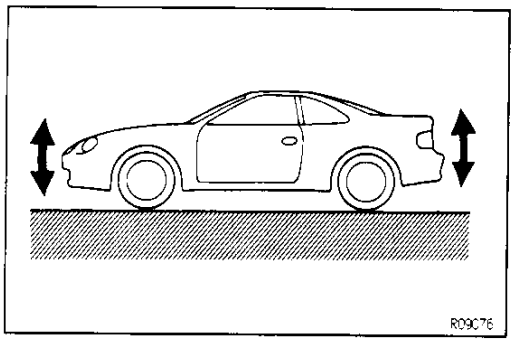

9. STABILIZE SUSPENSION

(a) Install the front wheel and lower vehicle.
Torque: 103 N·m (1,050 kgf·cm, 76 ft·lbf)

(b) Bounce the vehicle up and down several times to stabilize the suspension.

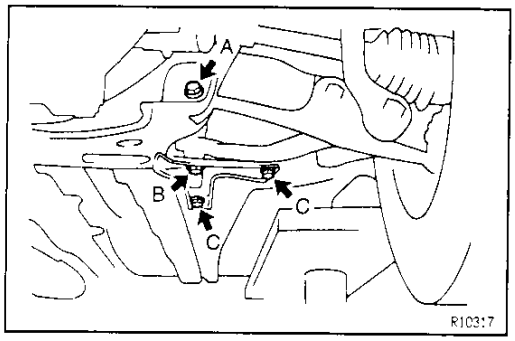

10. TORQUE BOLTS

Torque:

Bolt A: 157 N·m (1,600 kgf·cm, 116 ft·lbf)
Bolt B: 167 N·m (1,700 kgf·cm, 123 ft·lbf)
Bolt C: 175 N·m (1,800 kgf·cm, 130 ft·lbf)

11. CHECK FRONT WHEEL ALIGNMENT
(See page SA–5)

12. w/ ABS:
CHECK ABS SPEED SENSOR SIGNAL
(See page BR–93)

Downloaded from www.Manualslib.com manuals search engine

STABILIZER BAR
COMPONENTS

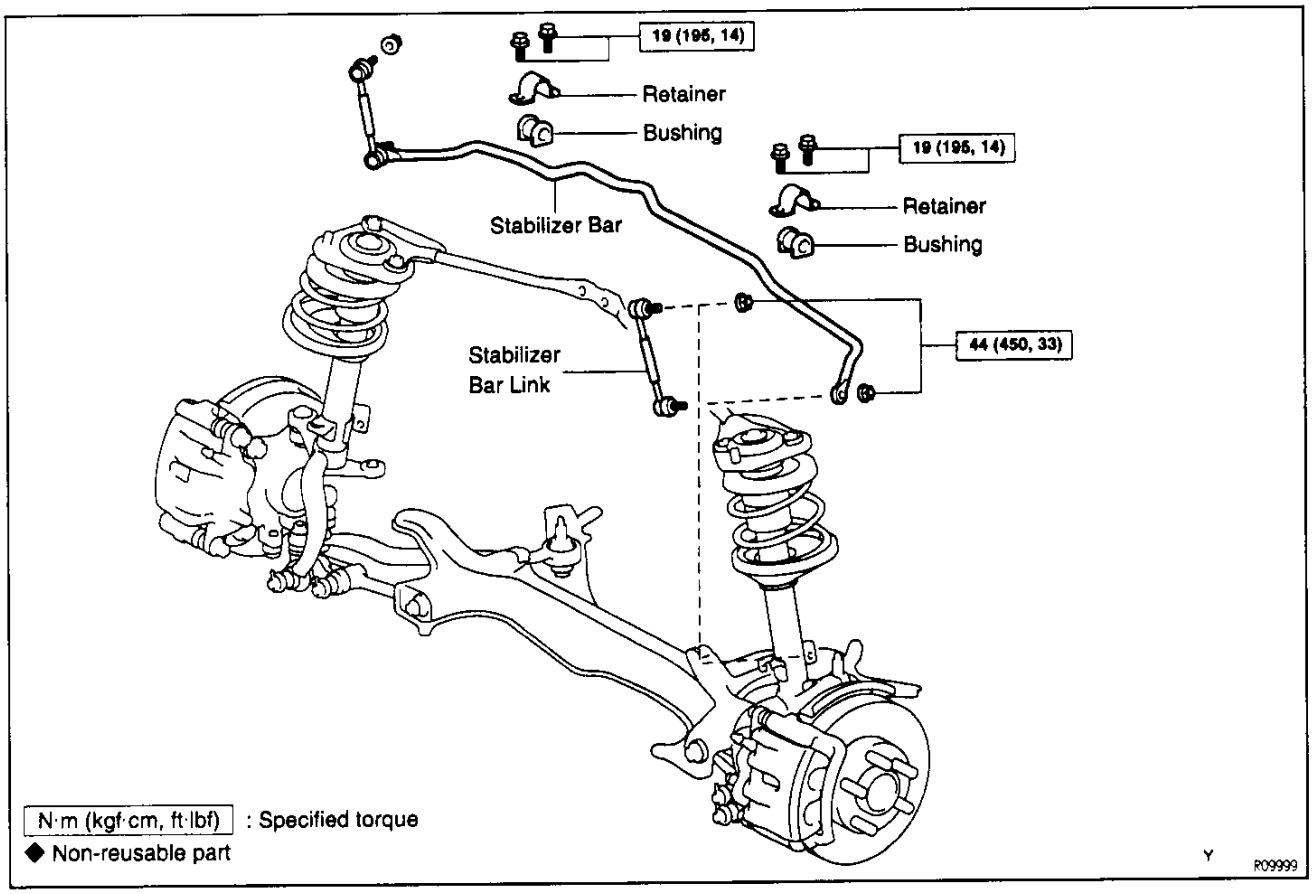

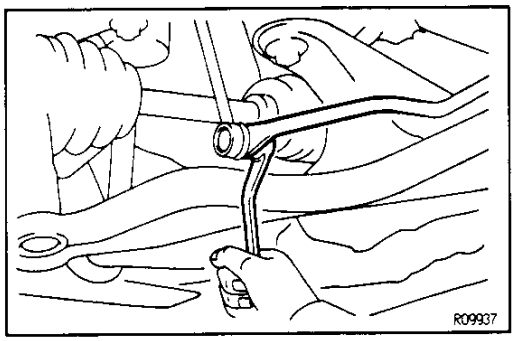

STABILIZER BAR REMOVAL

1. **REMOVE LEFT AND RIGHT STABILIZER BAR LINKS**
   Remove the nuts and stabilizer bar links from the stabilizer bar and lower suspension arm.

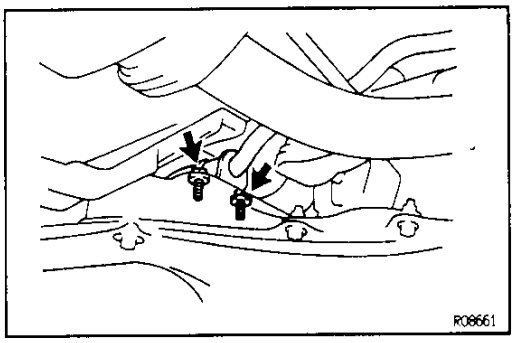

2. **REMOVE LEFT AND RIGHT STABILIZER BAR BUSHINGS**
   (a) Remove the bolts and bushing retainers.
   (b) Remove the stabilizer bar bushings.

Downloaded from www.Manualslib.com manuals search engine

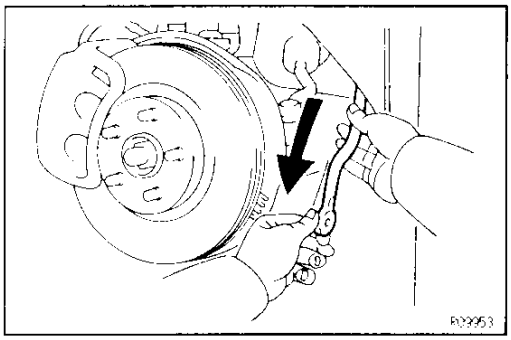

(c) Remove the stabilizer bar.

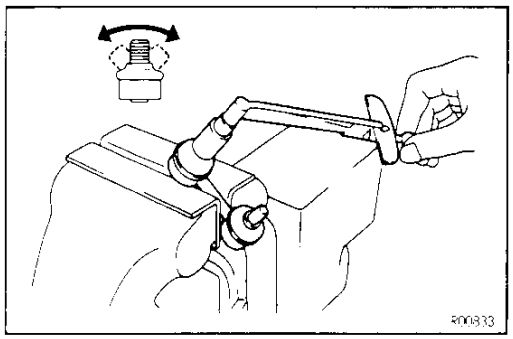

STABILIZER BAR LINK INSPECTION

SA035-02

INSPECT BALL JOINT FOR ROTATION CONDITION

(a) Flip the ball joint stud back and forth 5 times as shown in the illustration, before installing the nut.

(b) Using a torque gauge, turn the nut continuously one turn every 2—4 seconds and take the torque reading on the 5th turn.

Turning torque:

0.05—1.0 N·m (0.5—10 kgf·cm, 0.4—8.7 in.·lbf)

If not within specification, replace the stabilizer bar link.

SA

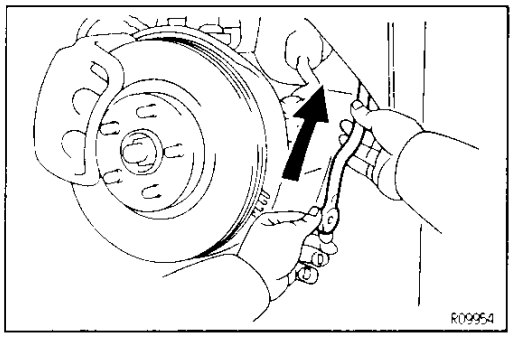

STABILIZER BAR INSTALLATION

SA1C0-02

1. **INSTALL LEFT AND RIGHT STABILIZER BAR BUSHINGS**

(a) Position the stabilizer bar.

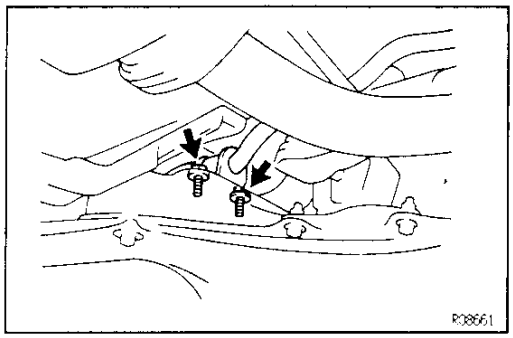

(b) Install the stabilizer bar bushings.

(c) Install the bushing retainers and bolts.

Torque: 19 N·m (195 kgf·cm, 14 ft·lbf)

Downloaded from www.Manualslib.com manuals search engine

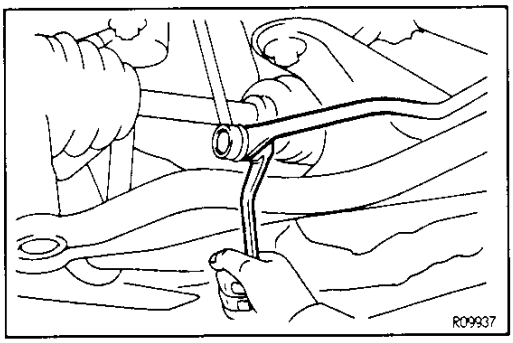

2. INSTALL LEFT AND RIGHT STABILIZER BAR LINKS

Connect the stabilizer bar link to the lower suspension arm and stabilizer bar.

Torque: 44 N·m (450 kgf·cm, 33 ft·lbf)

Downloaded from www.Manualslib.com manuals search engine

FRONT SUSPENSION
(MacPherson Strut Type)

DESCRIPTION

SA02P-06

The front suspension is MacPherson strut type suspension with L—shape lower arm.

SA

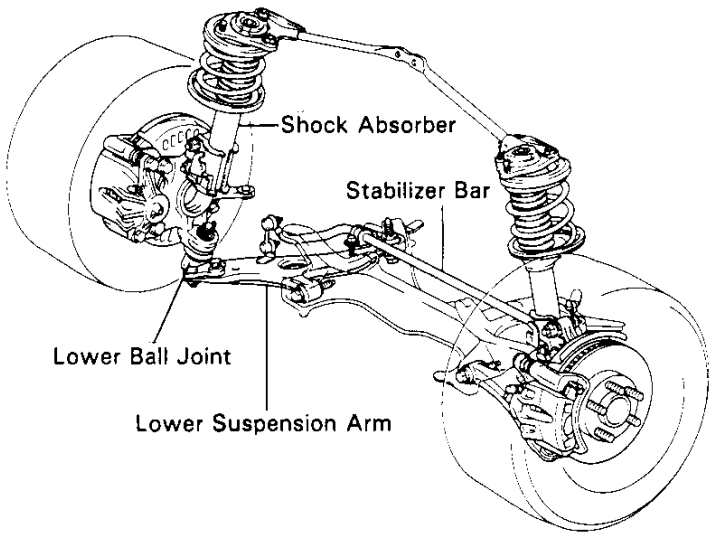

P09615

Downloaded from www.Manualslib.com manuals search engine

PREPARATION

SA03Q-06

SST (SPECIAL SERVICE TOOLS)

	09316-60010	Transmission & Transfer Bearing Replacer	Dust deflector installation
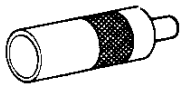	(09316-00010)	Replacer Pipe	
	(09316-00040)	Replacer "C"	
	09608-32010	Steering Knuckle Oil Seal Replacer	Dust deflector installation
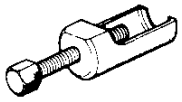	09610-20012	Pitman Arm Puller	
	09628-62011	Ball Joint Puller	
	09727-30020	Coil Spring Compressor	
	09729-22031	Front Spring Upper Seat Holder	

SA03R-04

RECOMMENDED TOOLS

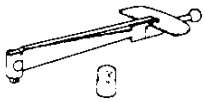	09025-00010	Small Torque Wrench	

SA03S-04

EQUIPMENT

Torque wrench	

SA

Downloaded from www.Manualslib.com manuals search engine

FRONT SHOCK ABSORBER
COMPONENTS

SA02T-06

SA

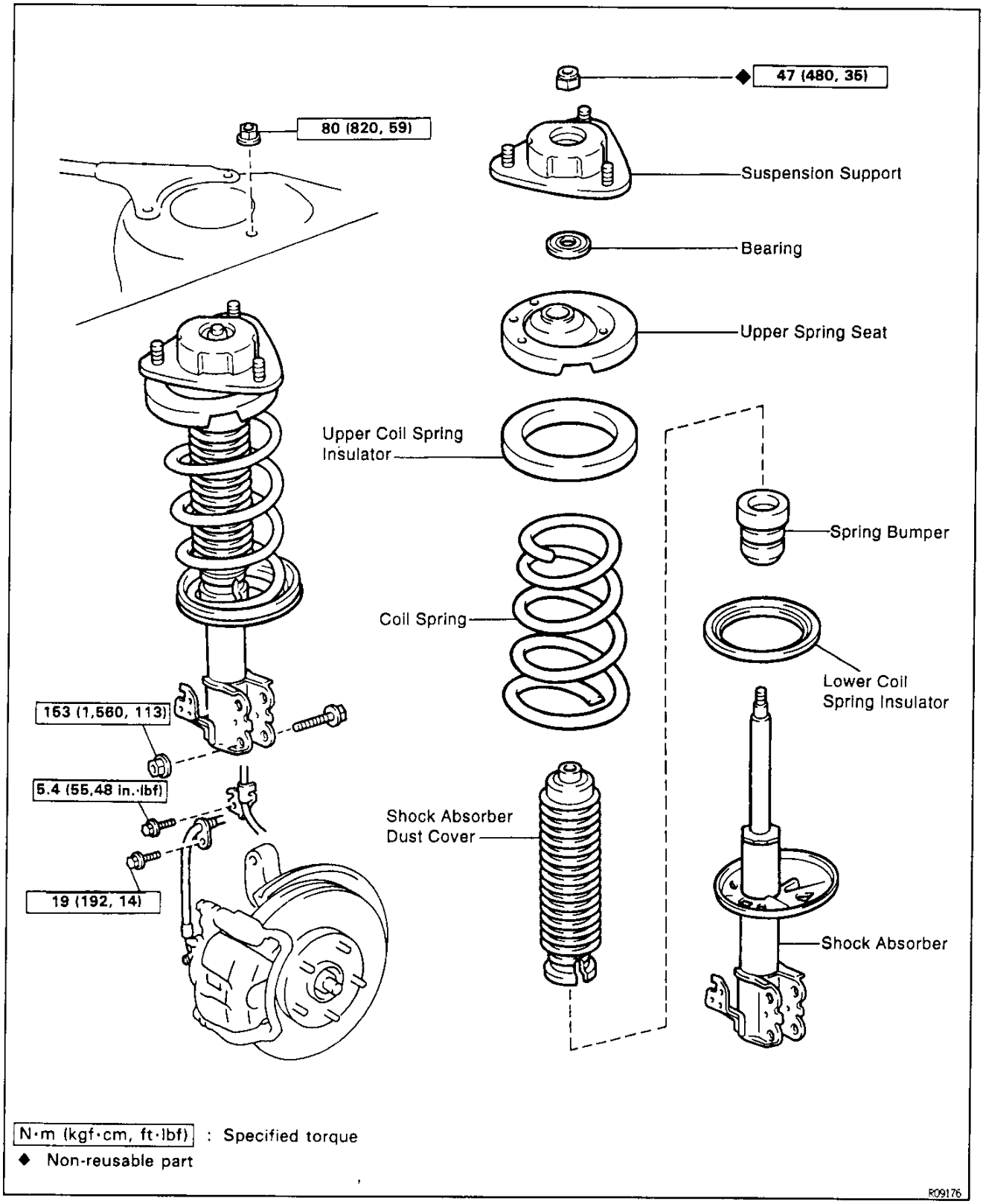

Downloaded from www.Manualslib.com manuals search engine

SA02U-07

FRONT SHOCK ABSORBER REMOVAL

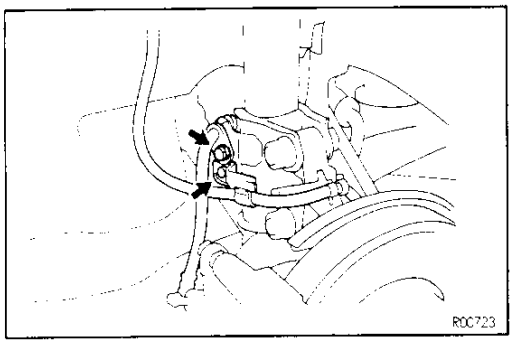

1. **JACK UP VEHICLE AND REMOVE FRONT WHEEL**
2. **REMOVE BRAKE LINE AND ABS SPEED SENSOR WIRE (w/ ABS) FROM SHOCK ABSORBER**

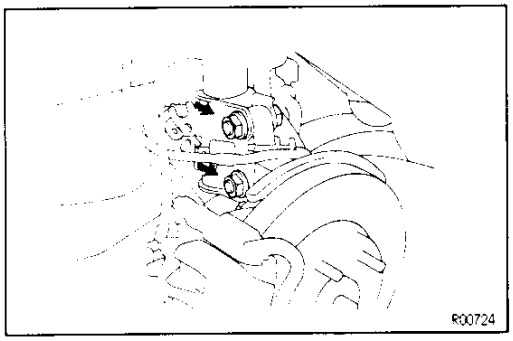

3. **DISCONNECT SHOCK ABSORBER FROM STEERING KNUCKLE**
   Remove the 2 nuts and bolts and disconnect the shock absorber from the steering knuckle.

SA

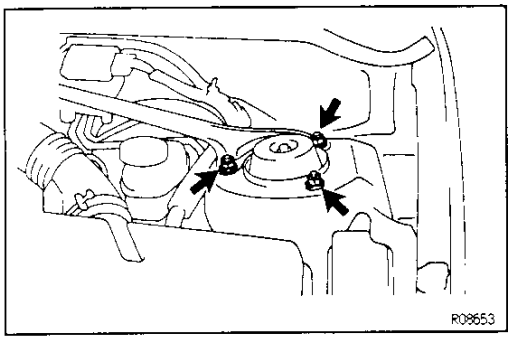

4. **REMOVE SHOCK ABSORBER WITH COIL SPRING**
   (a) Remove the 3 nuts on upper side of the shock absorber.
   (b) Remove the shock absorber with coil spring.

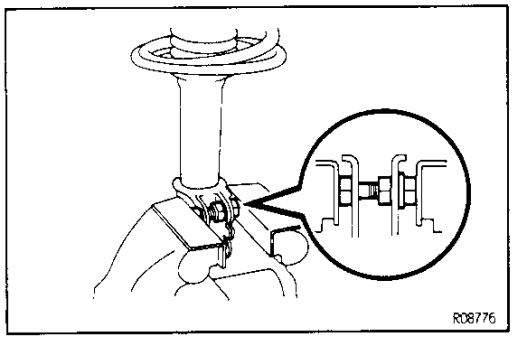

5. **REMOVE COIL SPRING**
   (a) Install a bolt and 2 nuts to the bracket at the lower portion of the shock absorber and secure it in a vise.

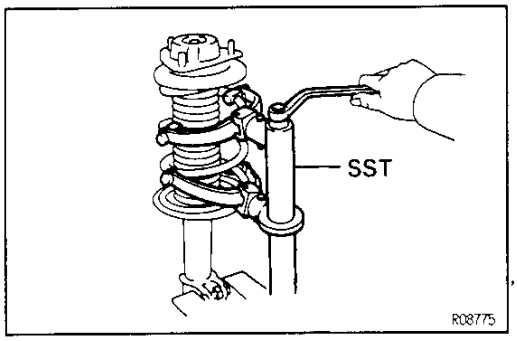

   (b) Using SST, compress the coil spring.
   SST 09727–30020
   NOTICE: When holding the shock absorber with the coil spring removed, do not hold it by the spring lower seat. Also, do not knock the spring lower seat.

Downloaded from www.Manualslib.com manuals search engine

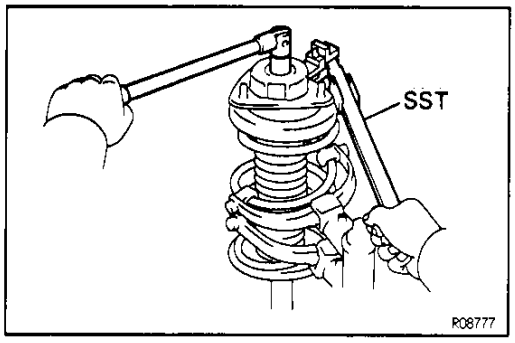

(c) Using SST to hold the suspension support remove the nut.
SST 09729–22031

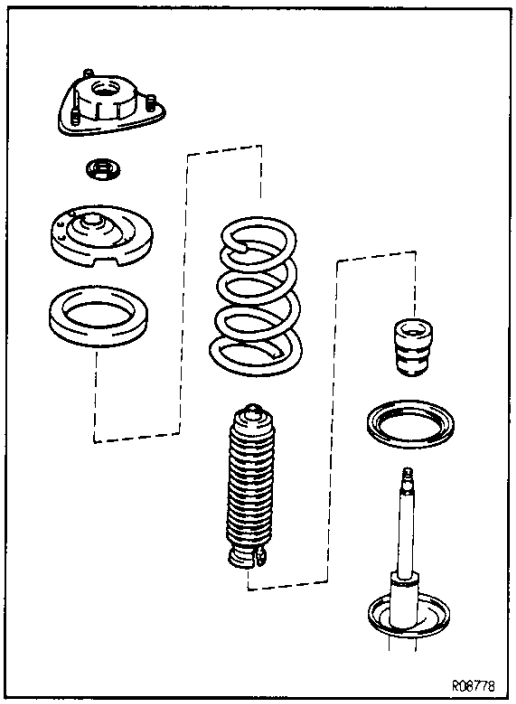

SA

(d) Remove the following parts.
- Suspension support
- Bearing
- Upper spring seat
- Upper coil spring insulator
- Coil spring
- Shock absorber dust cover
- Spring bumper
- Lower coil spring insulator

NOTICE: When removing or installing the shock absorber, if the bearing becomes separated in any way, it must be replaced by a new bearing.

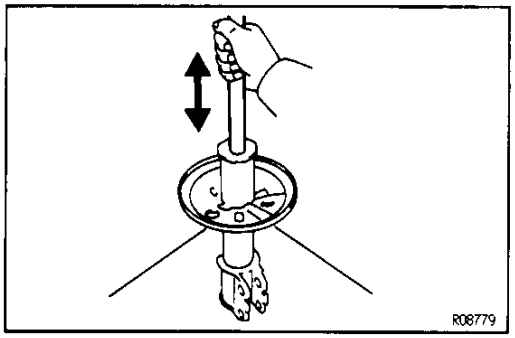

FRONT SHOCK ABSORBER INSPECTION

INSPECT SHOCK ABSORBER

Compress and extend the shock absorber rod and check that there is no abnormal resistance or unusual operation sounds.
If there is any abnormality, replace the shock absorber with a new one.
NOTICE: When discarding the shock absorber, use the following proceedure.

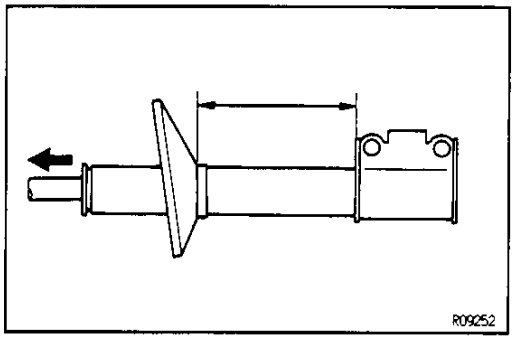

FRONT SHOCK ABSORBER DISPOSAL

1. **FULLY EXTEND SHOCK ABSORBER ROD**
2. **DRILL HOLE TO REMOVE GAS FROM CYLINDER**
   Using a drill, make a hole in the cylinder, as shown to remove the gas inside.
   CAUTION: The gas coming out is harmless, but be careful of chips which may fly up when drilling.

Downloaded from www.Manualslib.com manuals search engine

SA18W-02

FRONT SHOCK ABSORBER INSTALLATION

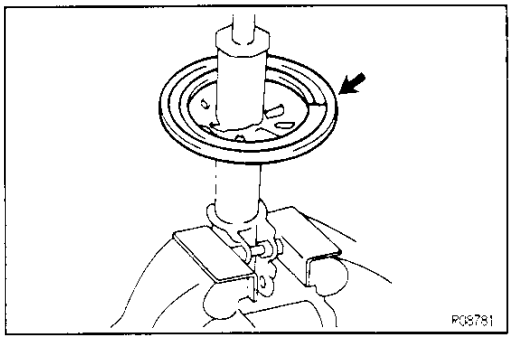

1. INSTALL LOWER COIL SPRING INSULATOR ONTO SHOCK ABSORBER

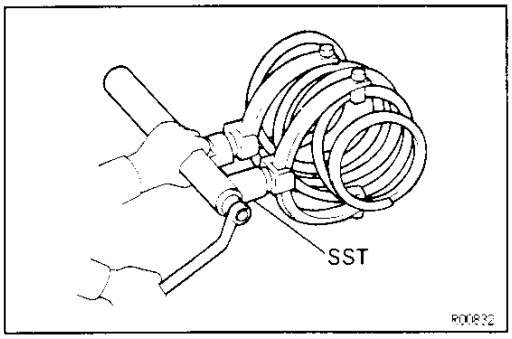

2. INSTALL COIL SPRING

(a) Using SST, compress the coil spring.
SST 09727–30020

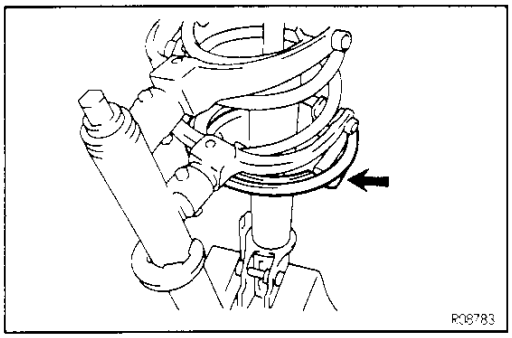

(b) Install the coil spring to the shock absorber.
HINT: Fit the lower end of the coil spring into the gap of the lower seat.

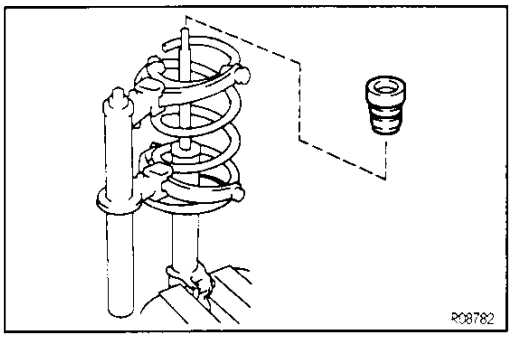

3. INSTALL SPRING BUMPER AND DUST COVER

(a) Install the spring bumper to piston rod.

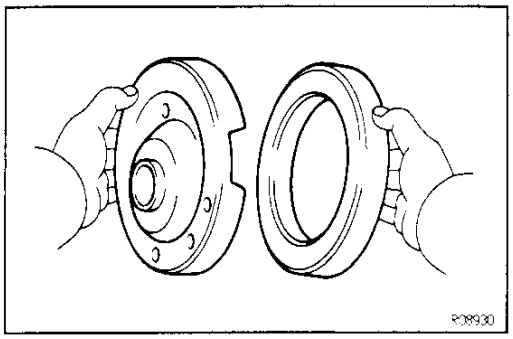

(b) Position the upper coil spring insulator to the upper spring seat.

Downloaded from www.Manualslib.com manuals search engine

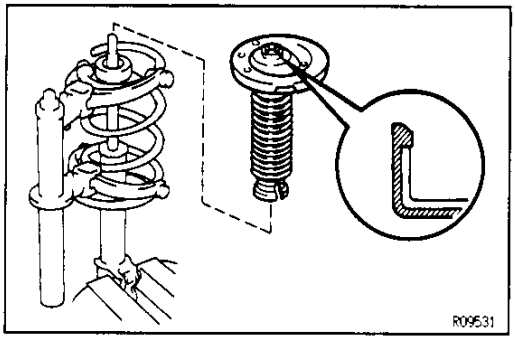

(c) Position the dust cover to the upper spring seat.
(d) Install the upper spring seat with dust cover to the shock absorber.

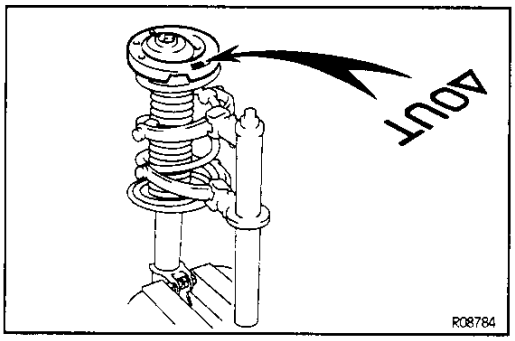

(e) Align the mark on the upper spring seat to point outward from the vehicle in its installed poisition.

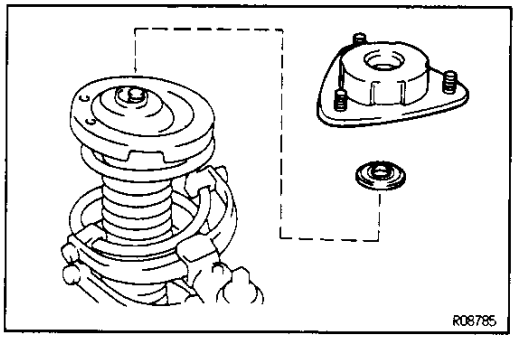

(f) Install the bearing and suspension support.

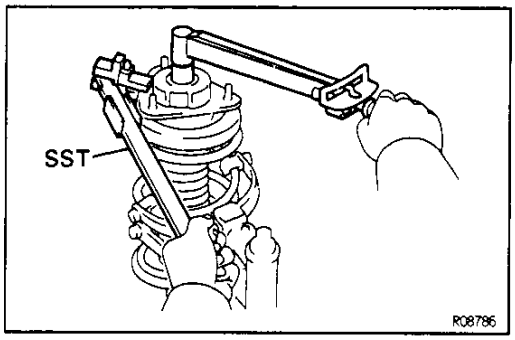

(g) Using SST to hold the suspension support, install a new nut.
SST 09729–22031
Torque: 47 N·m (480 kgf·cm, 35 ft·lbf)
(h) Remove the SST from the coil spring.
NOTICE: Check that the bearing fits into the recess in the suspension support.

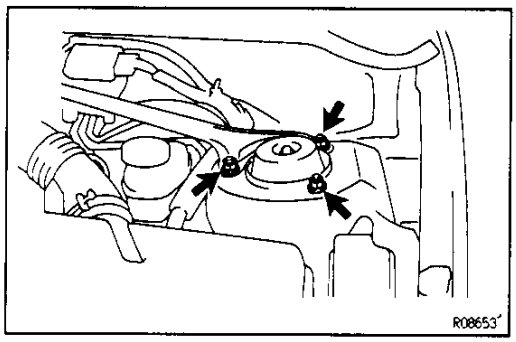

4. INSTALL SHOCK ABSORBER WITH COIL SPRING
Place the shock absorber and install the 3 nuts.
Torque: 80 N·m (820 kgf·cm, 59 ft·lbf)

Downloaded from www.Manualslib.com manuals search engine

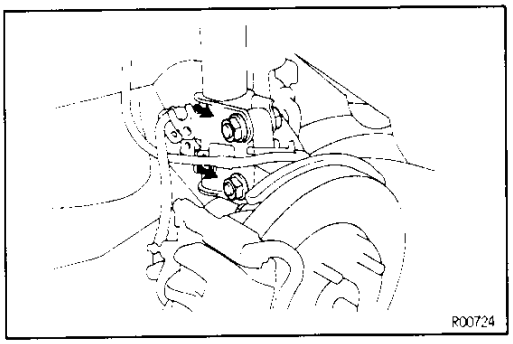

5. **CONNECT SHOCK ABSORBER TO STEERING KNUCKLE**
   (a) Coat the threads of the nuts with engine oil.
   (b) Install the 2 bolts and nuts.
   Torque: 153 N·m (1,560 kgf·cm, 113 ft·lbf)

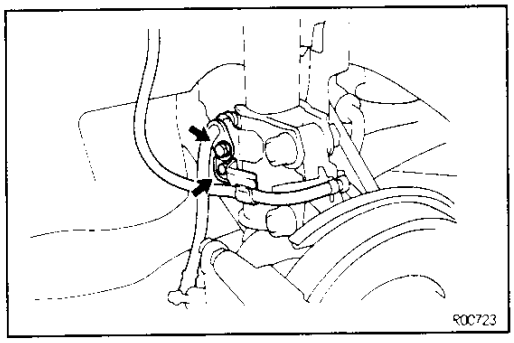

6. **INSTALL BRAKE LINE AND ABS SPEED SENSOR WIRE (w/ ABS) TO SHOCK ABSORBER**
   Torque:
   Brake line: 19 N·m (192 kgf·cm, 14 ft·lbf)
   ABS wire: 5.4 N·m (55 kgf·cm, 48 in.·lbf)
7. **INSTALL FRONT WHEEL AND LOWER VEHICLE**
   Torque: 103 N·m (1,050 kgf·cm, 76 ft·lbf)
8. **INSPECT FRONT WHEEL ALIGNMENT**
   (See page SA–7)

SA

Downloaded from www.Manualslib.com manuals search engine

LOWER SUSPENSION ARM
COMPONENTS

SA02W-08

SA

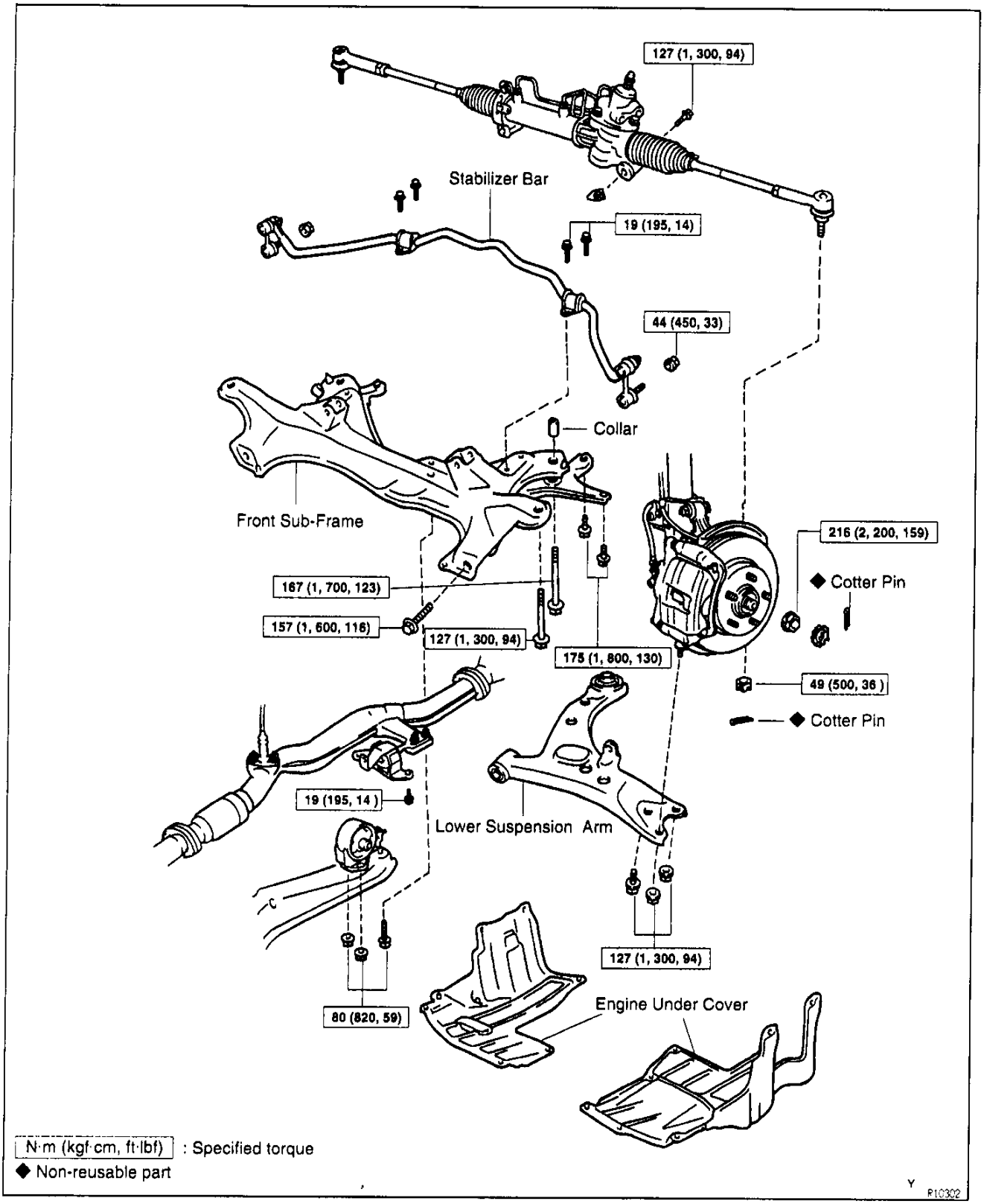

Downloaded from www.Manualslib.com manuals search engine

SA18X-02

LOWER SUSPENSION ARM REMOVAL

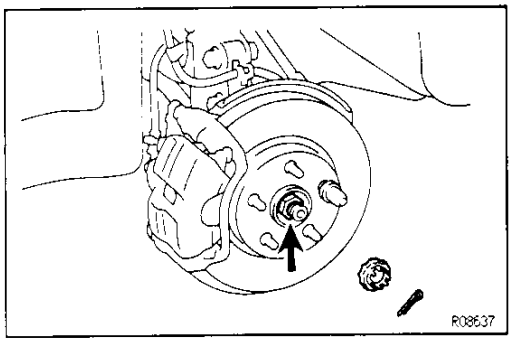

1. JACK UP VEHICLE AND REMOVE FRONT WHEEL

2. REMOVE ENGINE UNDER COVERS

3. REMOVE DRIVE SHAFT LOCK NUT

(a) Remove the cotter pin and lock cap.

(b) While applying the brakes, remove the nut.

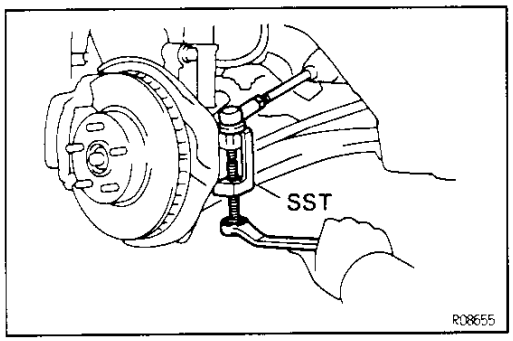

4. DISCONNECT TIE ROD END FROM STEERING KNUCKLE

(a) Remove the cotter pin and the nut.

(b) Using SST, disconnect the tie rod end from the steering knuckle.
SST 09610–20012

SA

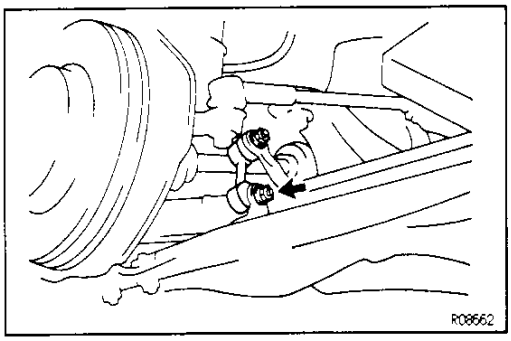

5. DISCONNECT STABILIZER BAR LINK FROM LOWER ARM

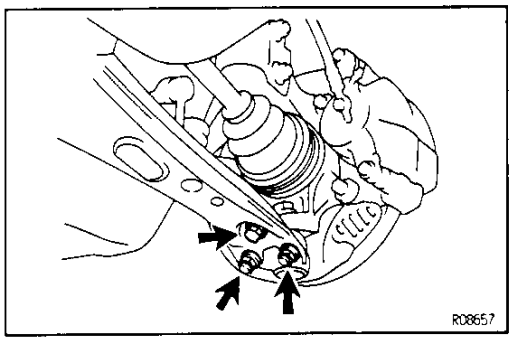

6. DISCONNECT LOWER ARM FROM LOWER BALL JOINT

Remove the bolt and 2 nuts.

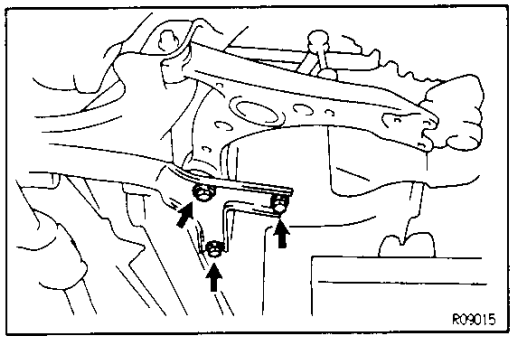

7. REMOVE 3 BOLTS

Downloaded from www.Manualslib.com manuals search engine

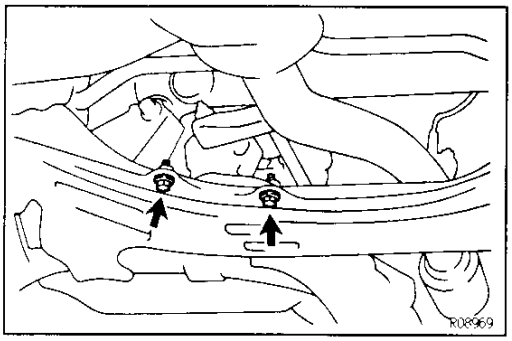

8. REMOVE FRONT SUB–FRAME

(a) Support the transaxle with a jack.

(b) Remove the 2 exhaust pipe support bracket set bolts.

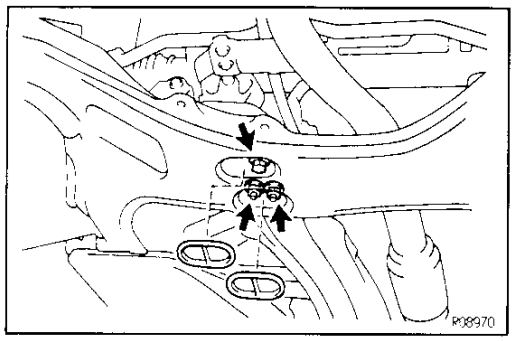

(c) Remove the 2 grommets and the center member set bolt.

(d) Remove the 2 center member set nuts.

SA

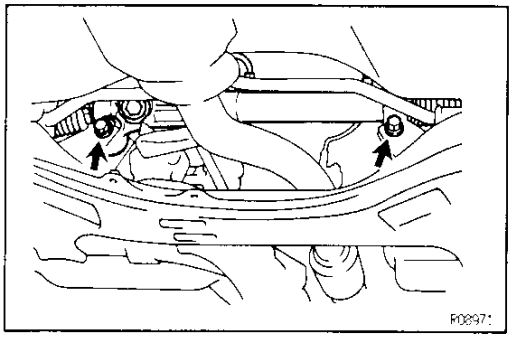

(e) Remove the 2 power steering gear assembly set bolts and nuts.

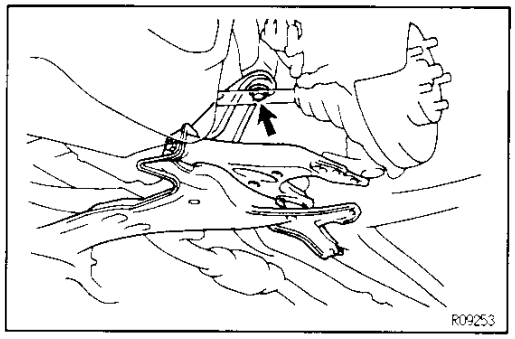

(f) Support the front sub–frame with a jack.

(g) Remove the 2 bolts and lower the front sub–frame with lower arms.

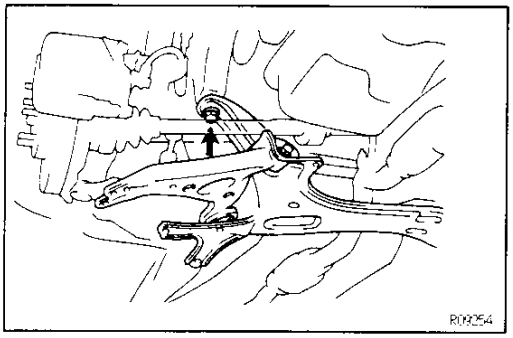

Downloaded from www.Manualslib.com manuals search engine

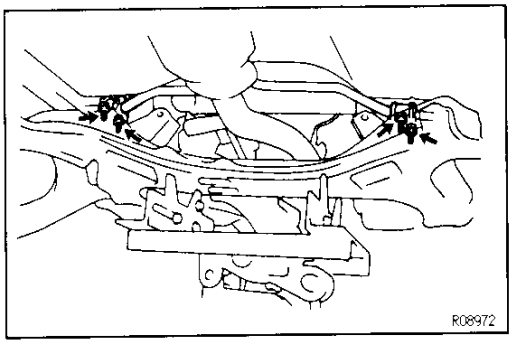

(h) Remove both stabilizer bar bushing retainer set bolts.

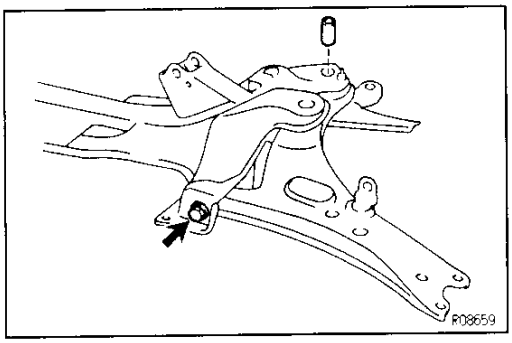

9. REMOVE LOWER ARM

(a) Remove the collar.

(b) Remove the bolt and disconnect the lower arm.

SA

LOWER SUSPENSION ARM INSTALLATION

SA1BY-02

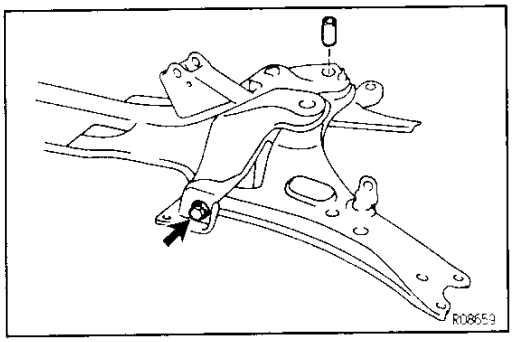

1. INSTALL LOWER ARM

Install the bolt and collar.

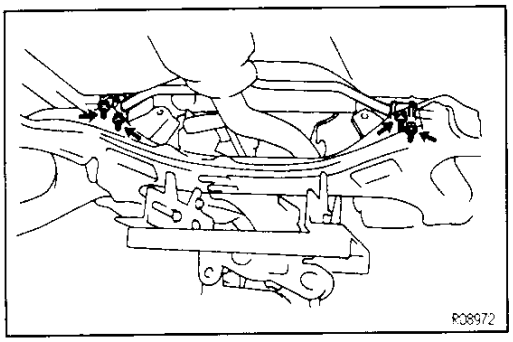

2. INSTALL FRONT SUB—FRAME

(a) Jack up the front sub—frame with lower arms.

(b) Install both stabilizer bar bushing retainers set bolts.
Torque: 19 N·m (195 kgf·cm, 14 ft·lbf)

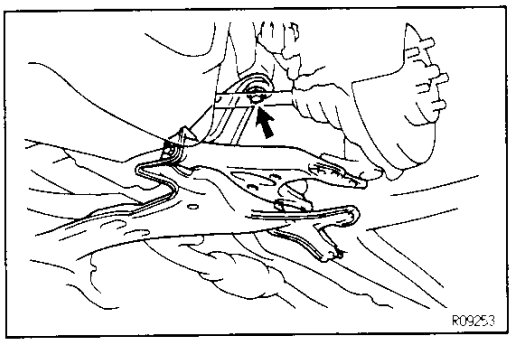

(c) Position the front sub—frame and tighten the 2 bolts.
Torque: 127 N·m (1,300 kgf·cm, 94 ft·lbf)

Downloaded from www.Manualslib.com manuals search engine

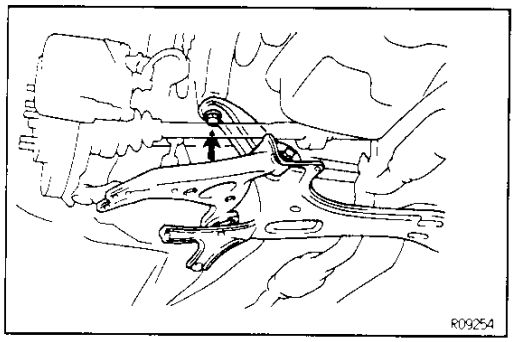

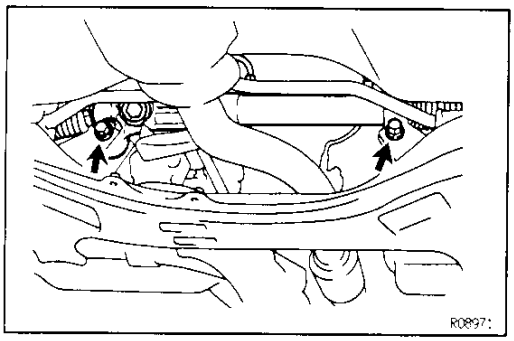

(d) Install the power steering gear assembly with 2 bolts.
Torque: 127 N·m (1,300 kgf·cm, 94 ft·lbf)

SA

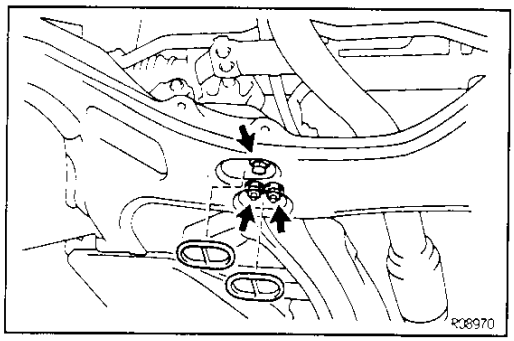

(e) Install the center member with the bolt and 2 nuts.
Torque: 80 N·m (820 kgf·cm, 59 ft·lbf)

(f) Install the 2 grommets.

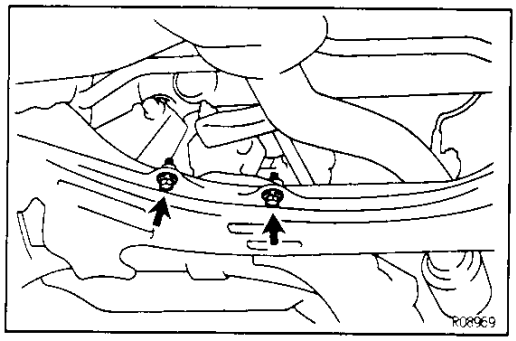

(g) Install the exhaust pipe support bracket with 2 bolts.
Torque: 19 N·m (195 kgf·cm, 14 ft·lbf)

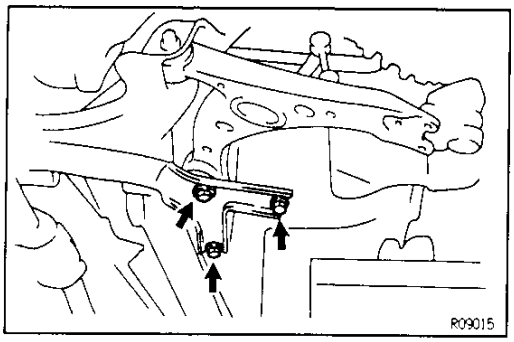

3. TEMPORARILY INSTALL 3 BOLTS

Downloaded from www.Manualslib.com manuals search engine

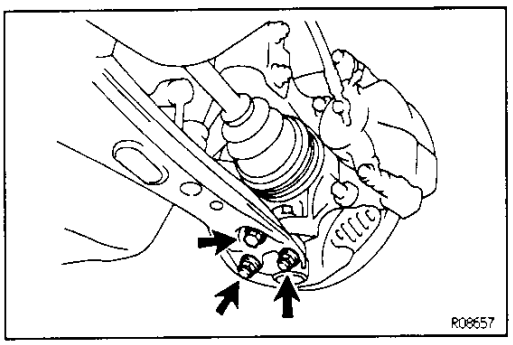

4. CONNECT LOWER ARM TO LOWER BALL JOINT

Tighten the bolt and 2 nuts.

Torque: 127 N·m (1,300 kgf·cm, 94 ft·lbf)

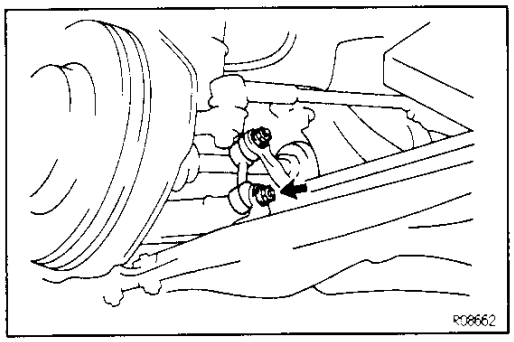

5. CONNECT STABILIZER BAR LINK TO LOWER ARM

Torque: 44 N·m (450 kgf·cm, 33 ft·lbf)

SA

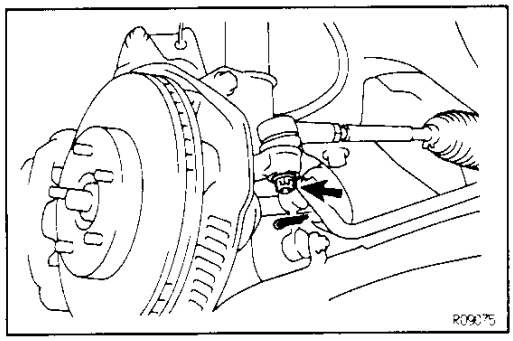

6. CONNECT TIE ROD END TO STEERING KNUCKLE

(a) Tighten the nut.

Torque: 49 N·m (500 kgf·cm, 36 ft·lbf)

(b) Install a new cotter pin.

HINT: If the cotter pin hole does not line up, correct by tightening the nut by the smallest amount possible.

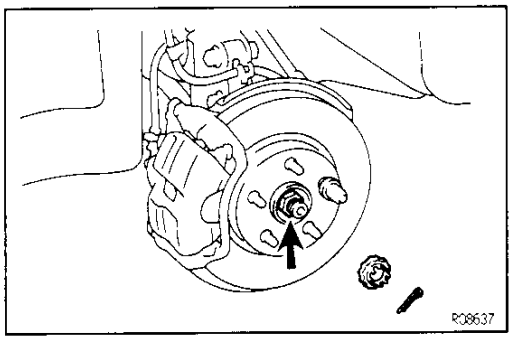

7. INSTALL DRIVE SHAFT LOCK NUT

(a) Install and torque the lock nut.

Torque: 216 N·m (2,200 kgf·cm, 159 ft·lbf)

(b) Install the lock cap and secure it with a new cotter pin.

8. INSTALL ENGINE UNDER COVERS

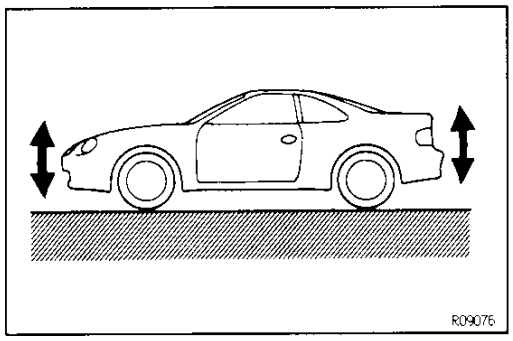

9. STABILIZE SUSPENSION

(a) Install the front wheel and lower vehicle.

Torque: 103 N·m (1,050 kgf·cm, 76 ft·lbf)

(b) Bounce the vehicle up and down several times to stabilize the suspension.

Downloaded from www.Manualslib.com manuals search engine

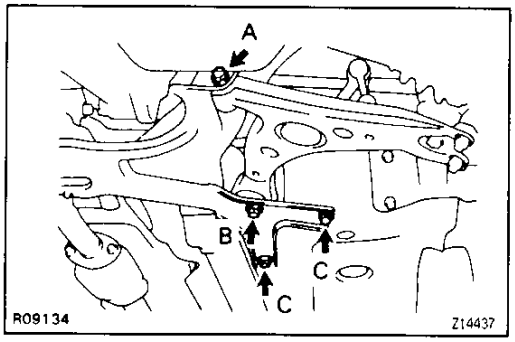

10. TORQUE BOLTS AND NUT

Torque:

Bolt A: 157 N·m (1,600 kgf·cm, 116 ft·lbf)
Bolt B: 167 N·m (1,700 kgf·cm, 123 ft·lbf)
Bolt C: 175 N·m (1,800 kgf·cm, 130 ft·lbf)

11. INSPECT FRONT WHEEL ALIGNMENT
(See page SA−7)

12. w/ ABS
INSPECT ABS SPEED SENSOR SIGNAL
(See page BR−93)

Downloaded from www.Manualslib.com manuals search engine

LOWER BALL JOINT
COMPONENTS

SA02I-07

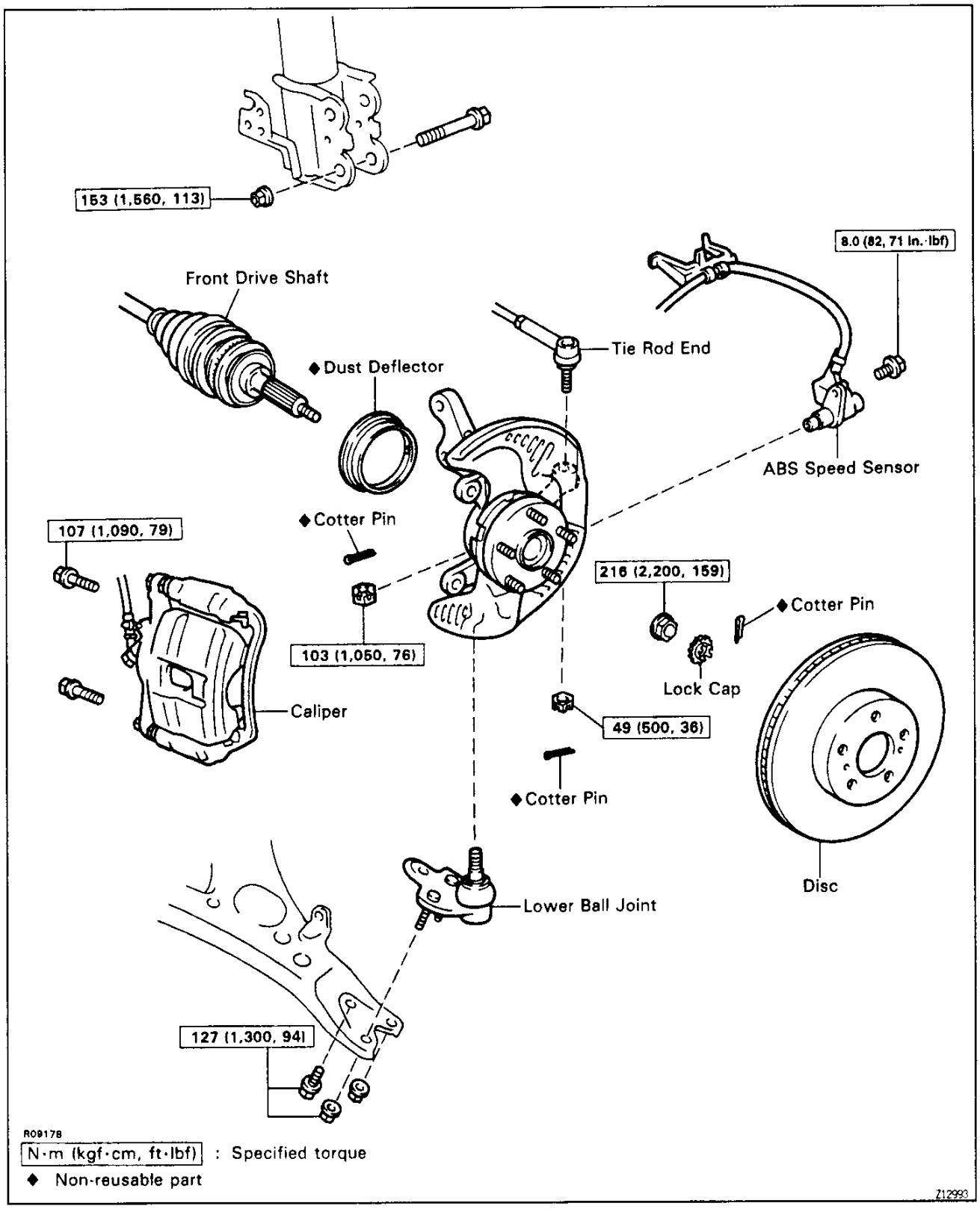

SA

Downloaded from www.Manualslib.com manuals search engine

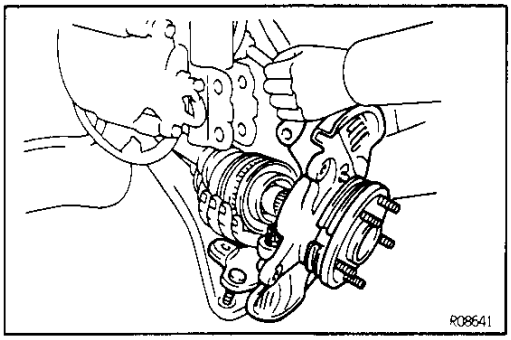

LOWER BALL JOINT REMOVAL

SA090-06

1. REMOVE STEERING KNUCKLE WITH AXLE HUB (See page SA—30)

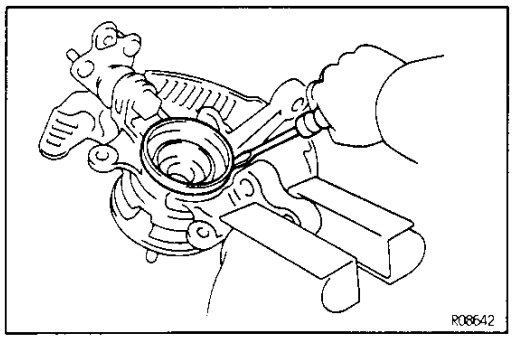

2. REMOVE LOWER BALL JOINT

(a) Using a screwdriver, remove the dust deflector.

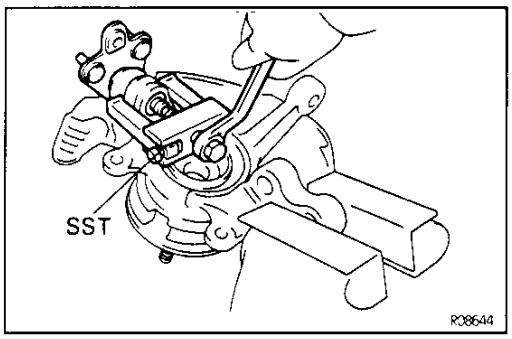

(b) Remove the cotter pin and nut.

(c) Using SST, remove the lower ball joint.
SST 09628—62011

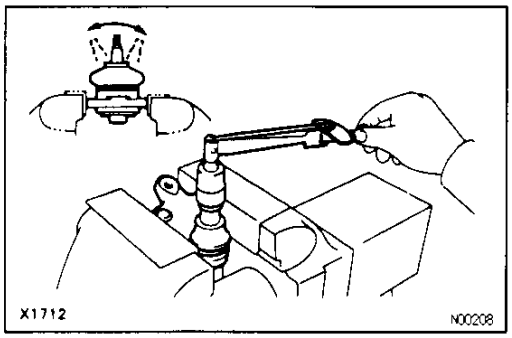

LOWER BALL JOINT INSPECTION

SA091-06

INSPECT BALL JOINT FOR ROTATION CONDITION

(a) Flip the ball joint stud back and forth 5 times before installing the nut.

(b) Using a torque gauge, turn the nut continuously one turn every 2—4 seconds and take the torque reading on the 5th turn.
Turning torque:
1.0—4.9 N·m (10—50 kgf·cm, 8.7—43 in.·lbf)

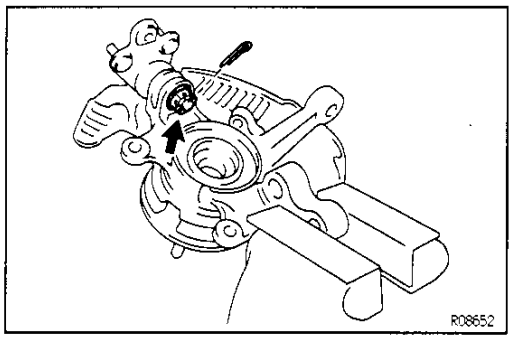

LOWER BALL JOINT INSTALLATION

SA092-06

1. INSTALL LOWER BALL JOINT

(a) Install the lower ball joint and tighten the nut.
Torque: 103 N·m (1,050 kgf·cm, 76 ft·lbf)

(b) Install a new cotter pin.

Downloaded from www.Manualslib.com manuals search engine

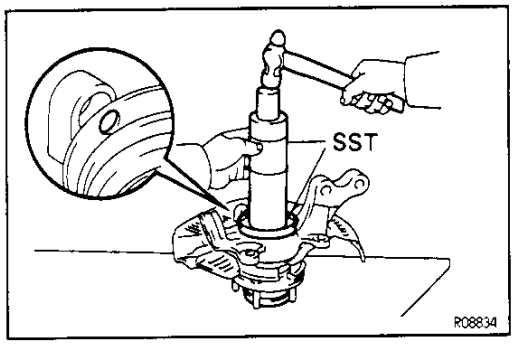

2. INSTALL NEW DUST DEFLECTOR

Using SST and a hammer, install a new dust deflector.

SST 09316–60010 (09316–00010, 09316–00040)
09608–32010

HINT: Align the holes for the ABS speed sensor in the dust deflector and steering knuckle.

3. INSTALL STEERING KNUCKLE WITH AXLE HUB

(See page SA–35)

SA

Downloaded from www.Manualslib.com manuals search engine

STABILIZER BAR
COMPONENTS

SA033-00

SA

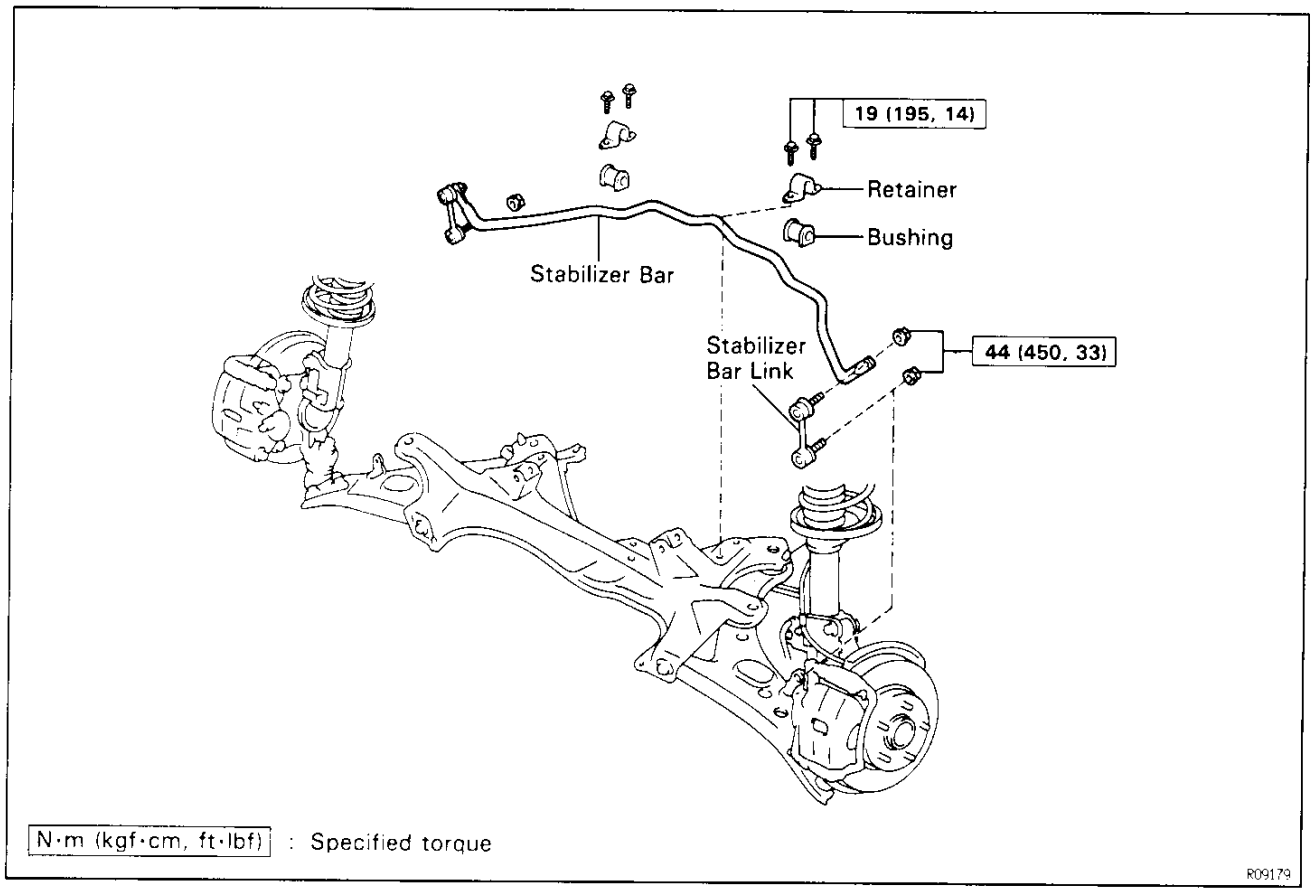

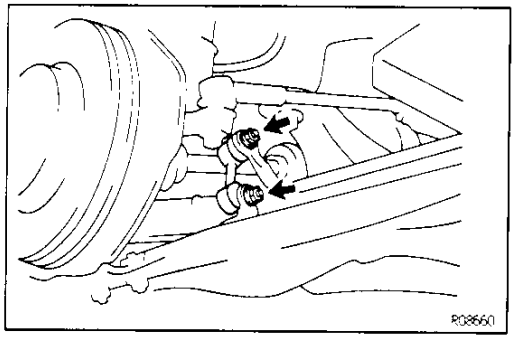

STABILIZER BAR REMOVAL

SA182-01

1. **DISCONNECT LEFT AND RIGHT STABILIZER BAR LINKS**
   Remove the nuts.

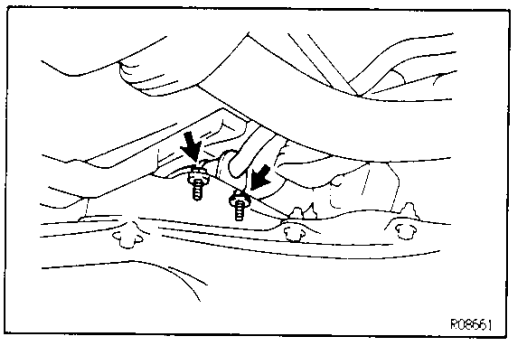

2. **REMOVE LEFT AND RIGHT STABILIZER BAR BUSHINGS**
   (a) Remove the bolts and bushing retainers.
   (b) Remove the stabilizer bar bushings.

Downloaded from www.Manualslib.com manuals search engine

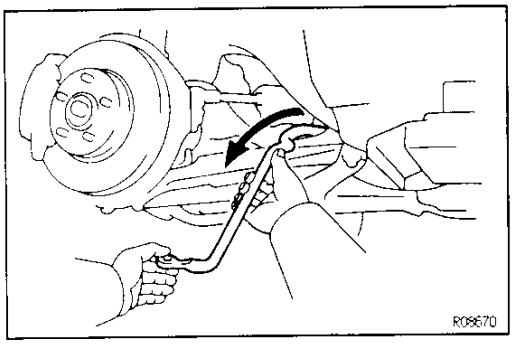

(c) Remove the stabilizer bar.

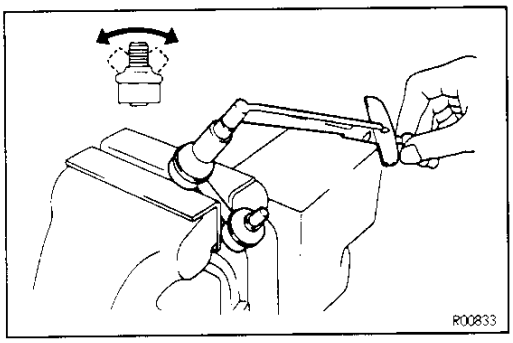

STABILIZER BAR LINK INSPECTION

SA099-00

INSPECT BALL JOINT FOR ROTATION CONDITION

(a) Flip the ball joint stud back and forth 5 times as shown in the illustration, before installing the nut.

(b) Using a torque gauge, turn the nut continuously one turn every 2 – 4 seconds and take the torque reading on the 5th turn.

Turning torque:

0.05 – 1.0 N·m (0.5 – 10 kgf·cm, 0.4 – 8.7 in.·lbf)

If not within specification, replace the stabilizer bar link.

SA

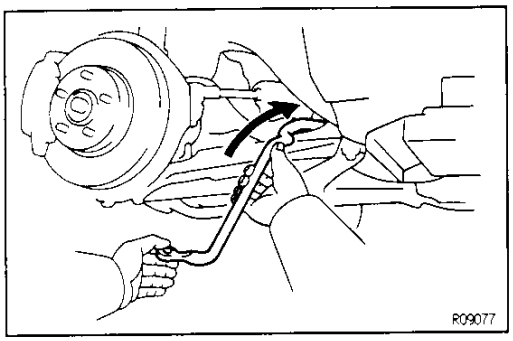

STABILIZER BAR INSTALLATION

SA100-01

1. INSTALL LEFT AND RIGHT STABILIZER BAR BUSHINGS

(a) Position the stabilizer bar.

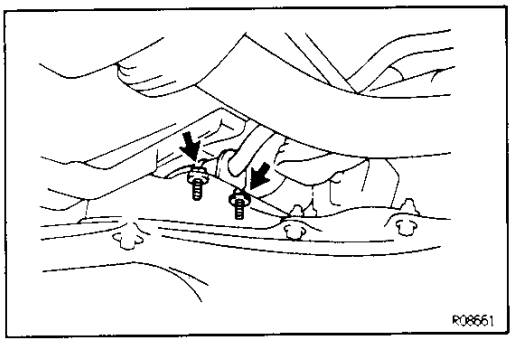

(b) Install the stabilizer bar bushings.

(c) Install the bushing retainers and bolts.

Torque: 19 N·m (195 kgf·cm, 14 ft·lbf)

Downloaded from www.Manualslib.com manuals search engine

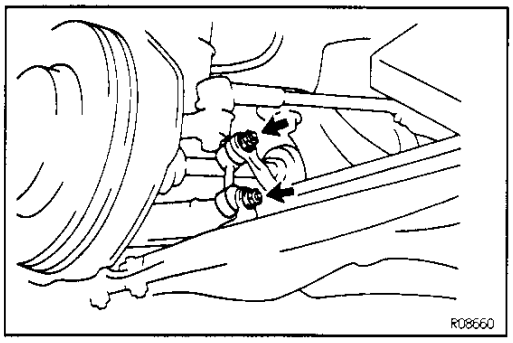

2. CONNECT LEFT AND RIGHT STABILIZER BAR LINKS

Connect the stabilizer bar link to the lower suspension arm and stabilizer bar.

Torque: 44 N·m (450 kgf·cm, 33 ft·lbf)

SA

Downloaded from www.Manualslib.com manuals search engine

REAR AXLE HUB AND CARRIER

DESCRIPTION

SA037-07

The rear axle also uses oil–sealed double–row angular ball bearings for wheel bearings as the front axle.

There is no need for bearing grease maintenance or preload adjustment.

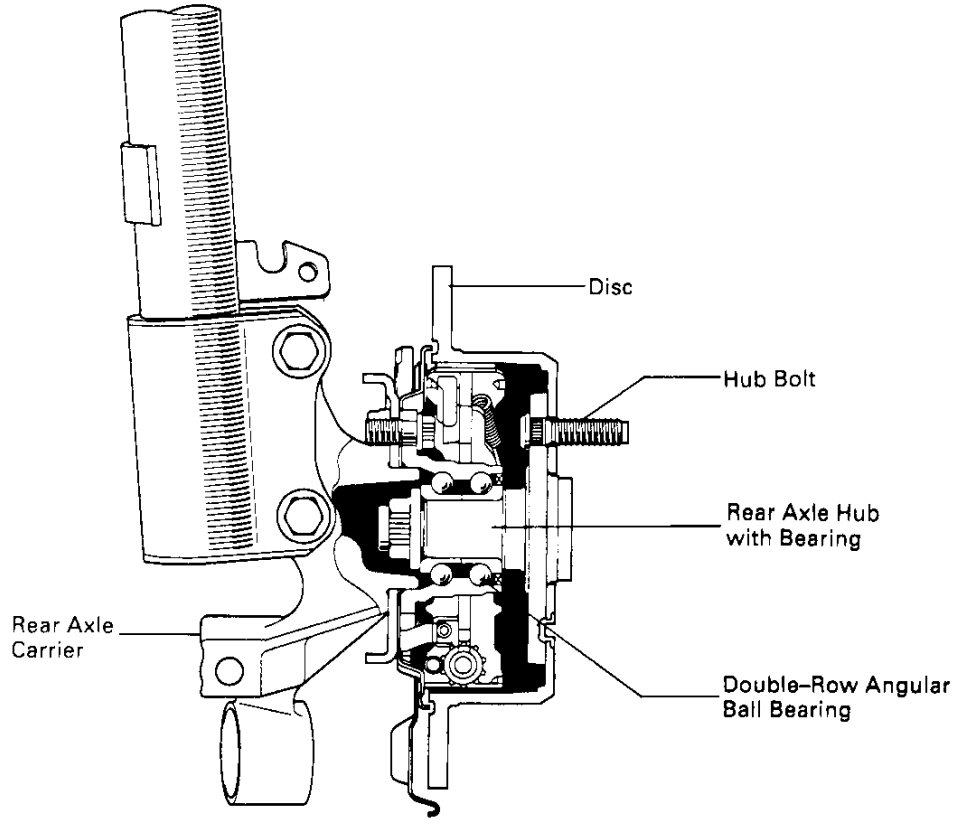

R09208

Downloaded from www.Manualslib.com manuals search engine

PREPARATION

EQUIPMENT

SA039-01

Dial indicator	
Torque wrench	

SA

Downloaded from www.Manualslib.com manuals search engine

REAR AXLE HUB
COMPONENTS

SA08A-09

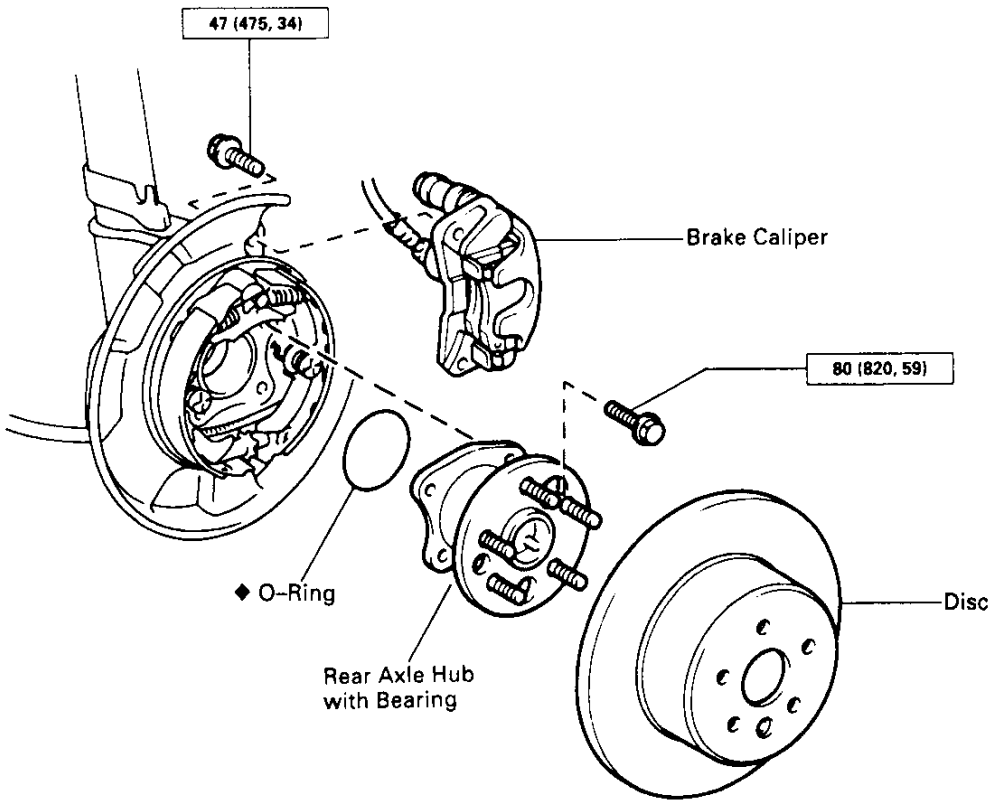

N·m (kgf·cm, ft·lbf) : Specified torque
◆ Non-reusable part

R10488

SA

Downloaded from www.Manualslib.com manuals search engine

SA1C1-08

REAR AXLE HUB REMOVAL

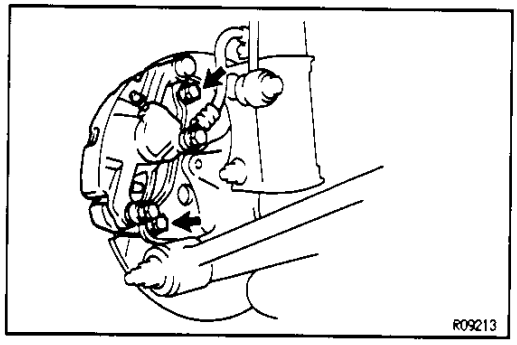

1. JACK UP VEHICLE AND REMOVE REAR WHEEL

2. REMOVE BRAKE CALIPER AND DISC

(a) Remove the 2 brake caliper set bolts.

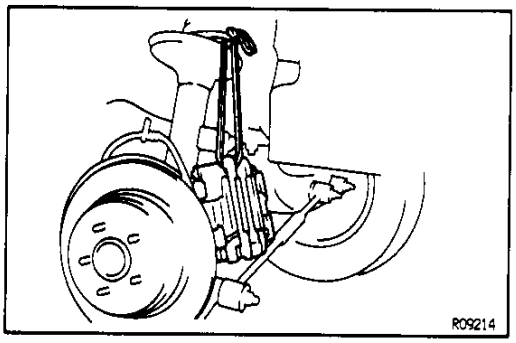

(b) Support the brake caliper securely.

(c) Remove the disc.

SA

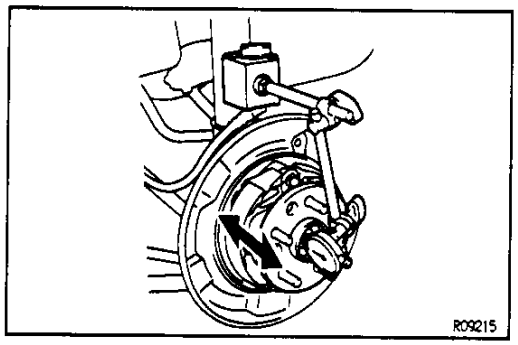

3. CHECK BEARING BACKLASH AND AXLE HUB DEVIATION

(a) Place the dial indicator near the center of the axle hub and check the backlash in the bearing shaft direction.
Maximum:
0.05 mm (0.0020 in.)
If greater than the specified maximum, replace the axle hub with bearing.

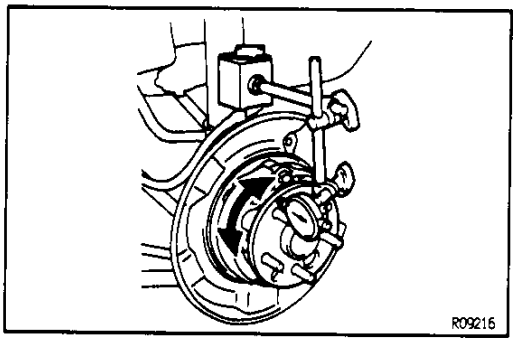

(b) Using a dial indicator, check the deviation at the surface of the axle hub outside the hub bolt.
Maximum:
0.07 mm (0.0028 in.)
If greater than the specified maximum, replace the axle hub with bearing.

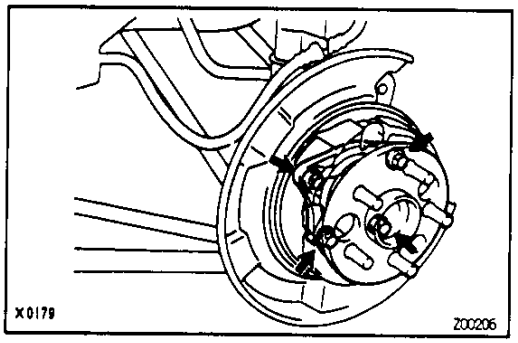

4. REMOVE REAR AXLE HUB

(a) Remove the 4 bolts and rear axle hub.

(b) Remove the O—ring.

Downloaded from www.Manualslib.com manuals search engine

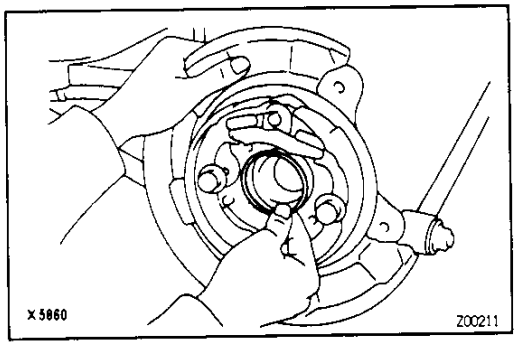

REAR AXLE HUB INSTALLATION

1. INSTALL REAR AXLE HUB

(a) Install a new O—ring.
HINT: Coat the O—ring with MP grease.

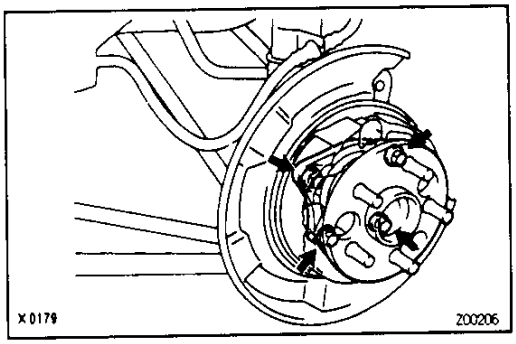

(b) Install the rear axle hub with the 4 bolts.
Torque: 80 N·m (820 kgf·cm, 59 ft·lbf)

SA

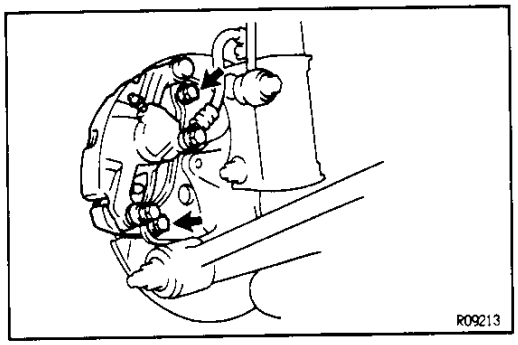

2. INSTALL DISC AND BRAKE CALIPER

(a) Install the disc.
(b) Install the brake caliper with the 2 bolts.
Torque: 47 N·m (475 kgf·cm, 34 ft·lbf)

3. INSTALL REAR WHEEL AND LOWER VEHICLE
Torque: 103 N·m (1,050 kgf·cm, 76 ft·lbf)

Downloaded from www.Manualslib.com manuals search engine

HUB BOLT REPLACEMENT

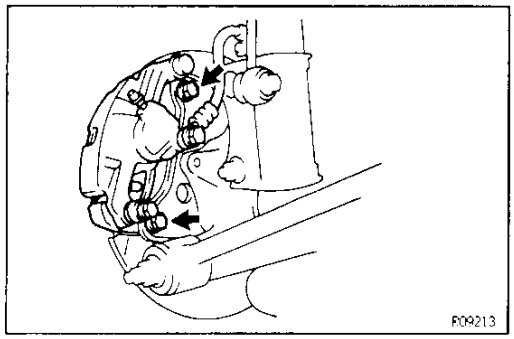

1. JACK UP VEHICLE AND REMOVE REAR WHEEL

2. REMOVE BRAKE CALIPER AND DISC

(a) Remove the 2 brake caliper set bolts.

(b) Support the brake caliper securely.

(c) Remove the disc.

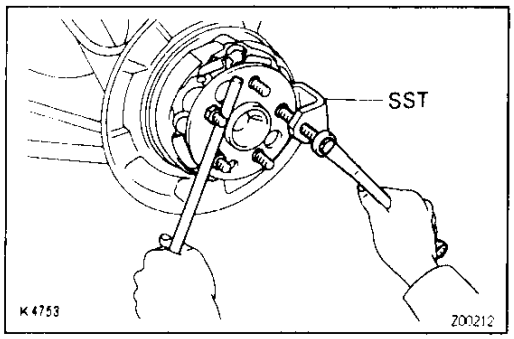

3. REMOVE HUB BOLT

Using SST, remove the hub bolt.

SST 09628–10011

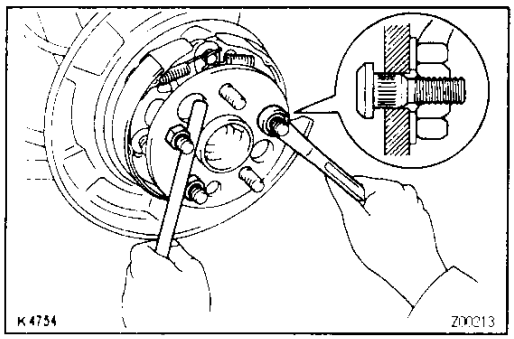

4. INSTALL NEW HUB BOLT

Install washer and nut to the hub bolt, as shown in the illustration, and install the hub bolt by tightening the nut.

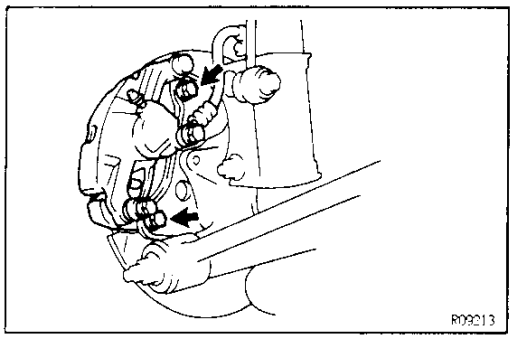

5. INSTALL BRAKE DISC AND CALIPER

(a) Install the disc.

(b) Install the brake caliper with the 2 bolts.

Torque: 47 N·m (475 kgf·cm, 34 ft·lbf)

6. INSTALL REAR WHEEL AND LOWER VEHICLE

Torque: 103 N·m (1,050 kgf·cm, 76 ft·lbf)

SA

Downloaded from www.Manualslib.com manuals search engine

REAR AXLE CARRIER
COMPONENTS

SA05F-0A

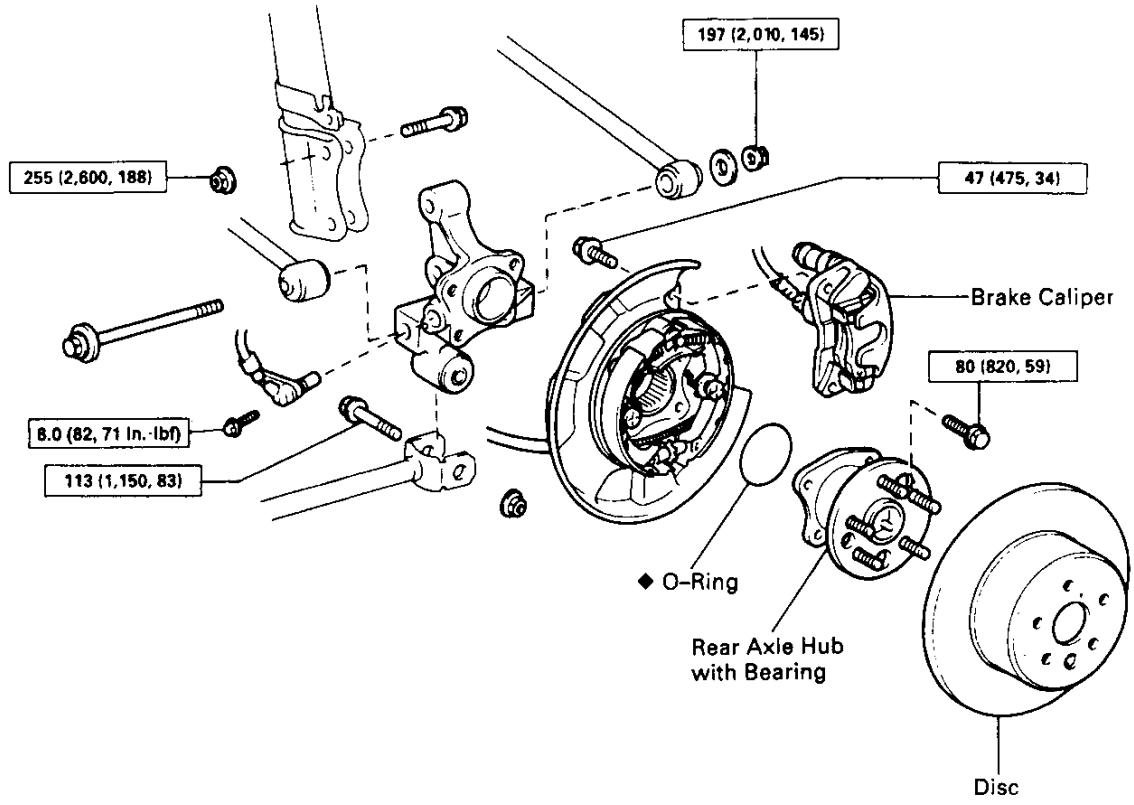

N·m (kgf·cm, ft·lbf) : Specified torque
◆ Non-reusable part

R10489

SA

Downloaded from www.Manualslib.com manuals search engine

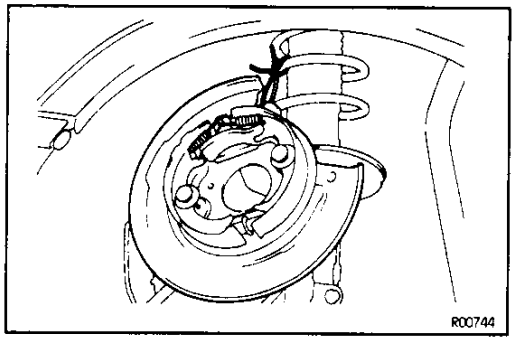

REAR AXLE CARRIER REMOVAL

SA1DW-01

1. **JACK UP VEHICLE AND REMOVE REAR WHEEL**
2. **REMOVE REAR AXLE HUB**
   (See page SA—134)
3. **DISCONNECT BACKING PLATE FROM REAR AXLE CARRIER**

(a) Disconnect the backing plate from rear axle carrier.
(b) Support the backing plate securely.

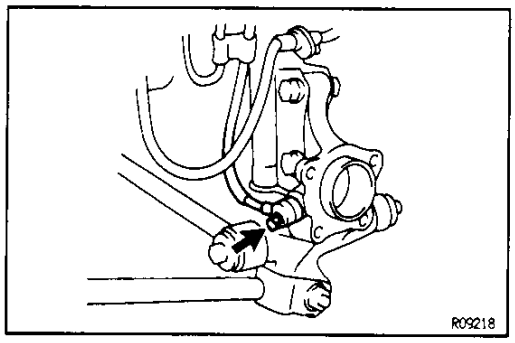

4. **w/ ABS:**
   DISCONNECT ABS SPEED SENSOR
   Disconnect the ABS speed sensor from rear axle carrier.

SA

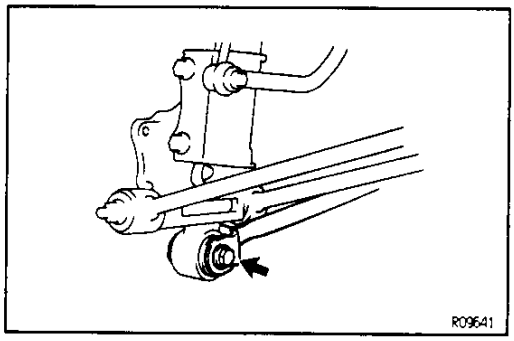

5. **REMOVE REAR AXLE CARRIER**

(a) Remove the bolt and nut and disconnect the strut rod from the rear axle carrier.

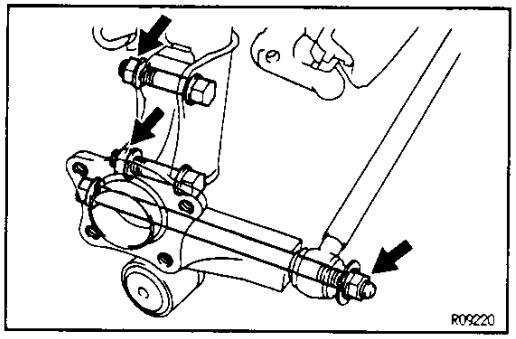

(b) Remove the 2 nuts from shock absorber lower set bolts.
HINT: Do not remove the bolts.
(c) Remove the bolt, nut and disconnect the lower suspension arms from axle carrier.
(d) Pull out the 2 bolts from the shock absorber and remove rear axle carrier.

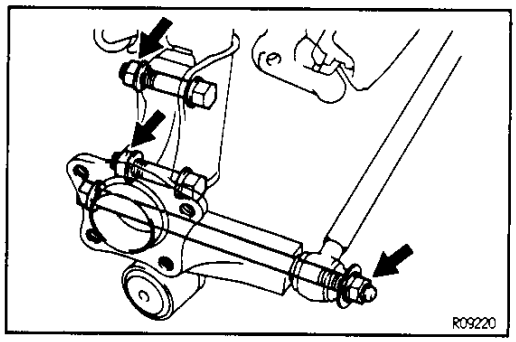

REAR AXLE CARRIER INSTALLATION

SA1DX-01

1. **INSTALL REAR AXLE CARRIER**

(a) Temporarily connect the lower suspension arms to the axle carrier with the bolt and nut.
(b) Temporarily connect the shock absorber to the axle carrier with the 2 bolts and nuts.

Downloaded from www.Manualslib.com manuals search engine

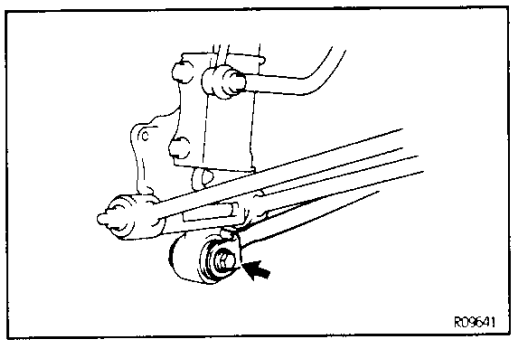

(c) Temporarily connect the strut rod to the rear axle carrier with the bolt and nut.

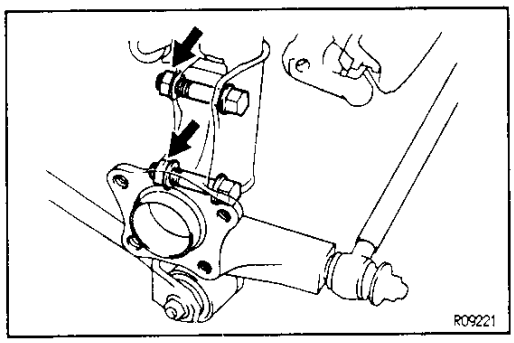

(d) Torque the 2 shock absorber set nuts.
Torque: 255 N·m (2,600 kgf·cm, 188 ft·lbf)

SA

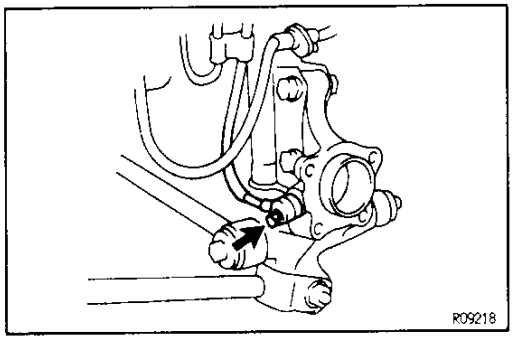

2. w/ ABS:
CONNECT ABS SPEED SENSOR
Connect the ABS speed sensor to the rear axle carrier.
Torque: 8.0 N·m (82 kgf·cm, 71 in.·lbf)

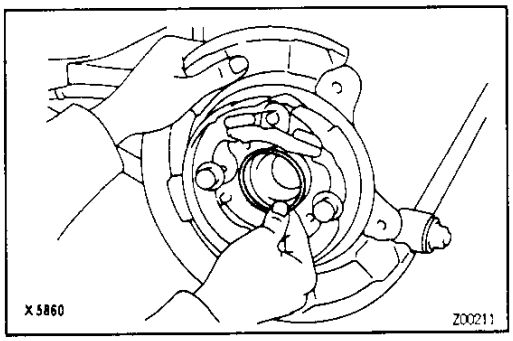

3. INSTALL BACKING PLATE AND REAR AXLE HUB
(a) Place the backing plate.
(b) Install a new O–ring.
HINT: Coat the O–ring with MP grease.

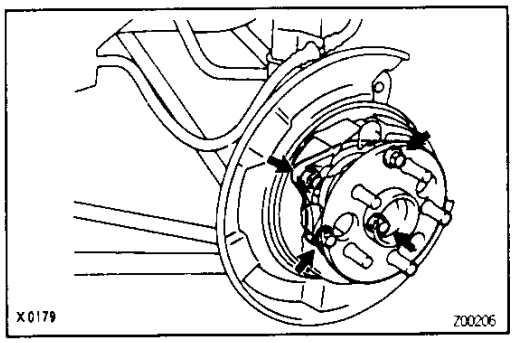

(c) Install the rear axle hub with the 4 bolts.
Torque: 80 N·m (820 kgf·cm, 59 ft·lbf)

Downloaded from www.Manualslib.com manuals search engine

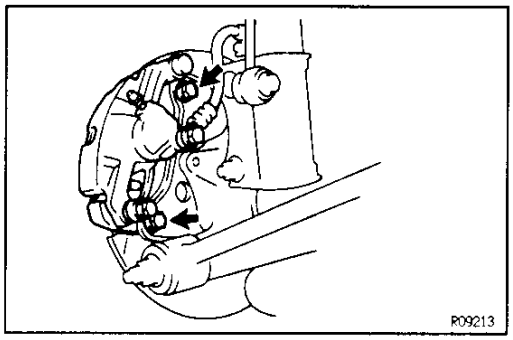

4. INSTALL BRAKE DISC AND CALIPER

(a) Install the disc.

(b) Install the brake caliper with the 2 bolts.

Torque: 47 N·m (475 kgf·cm, 34 ft·lbf)

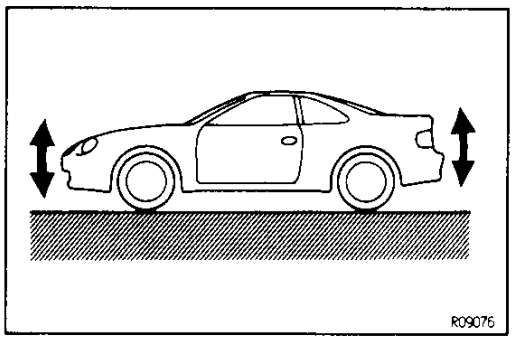

5. STABILIZE SUSPENSION

(a) Install the rear wheel and lower the vehicle.

Torque: 103 N·m (1,050 kgf·cm, 76 ft·lbf)

(b) Bounce the vehicle up and down several times to stabilize the suspension.

6. TORQUE BOLTS AND NUT

(a) Jack up vehicle and support body with stands.

(b) Remove the rear wheel.

(c) Support the rear axle carrier with a jack.

(d) Torque the bolts and nuts.

Torque:

Strut rod: 113 N·m (1,150 kgf·cm, 83 ft·lbf)

Lower arm: 197 N·m (2,010 kgf·cm, 145 ft·lbf)

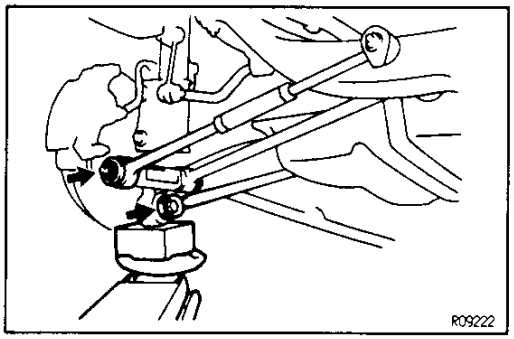

7. INSTALL REAR WHEEL AND LOWER VEHICLE

Torque: 103 N·m (1,050 kgf·cm, 76 ft·lbf)

8. INSPECT AND ADJUST REAR WHEEL ALIGNMENT

(See page SA-9)

SA

Downloaded from www.Manualslib.com manuals search engine

REAR SUSPENSION

DESCRIPTION

SA03J-07

The rear suspension is dual—link strut independent suspension composed of two lower arms in parallel at the side, and strut rods which extend forward.

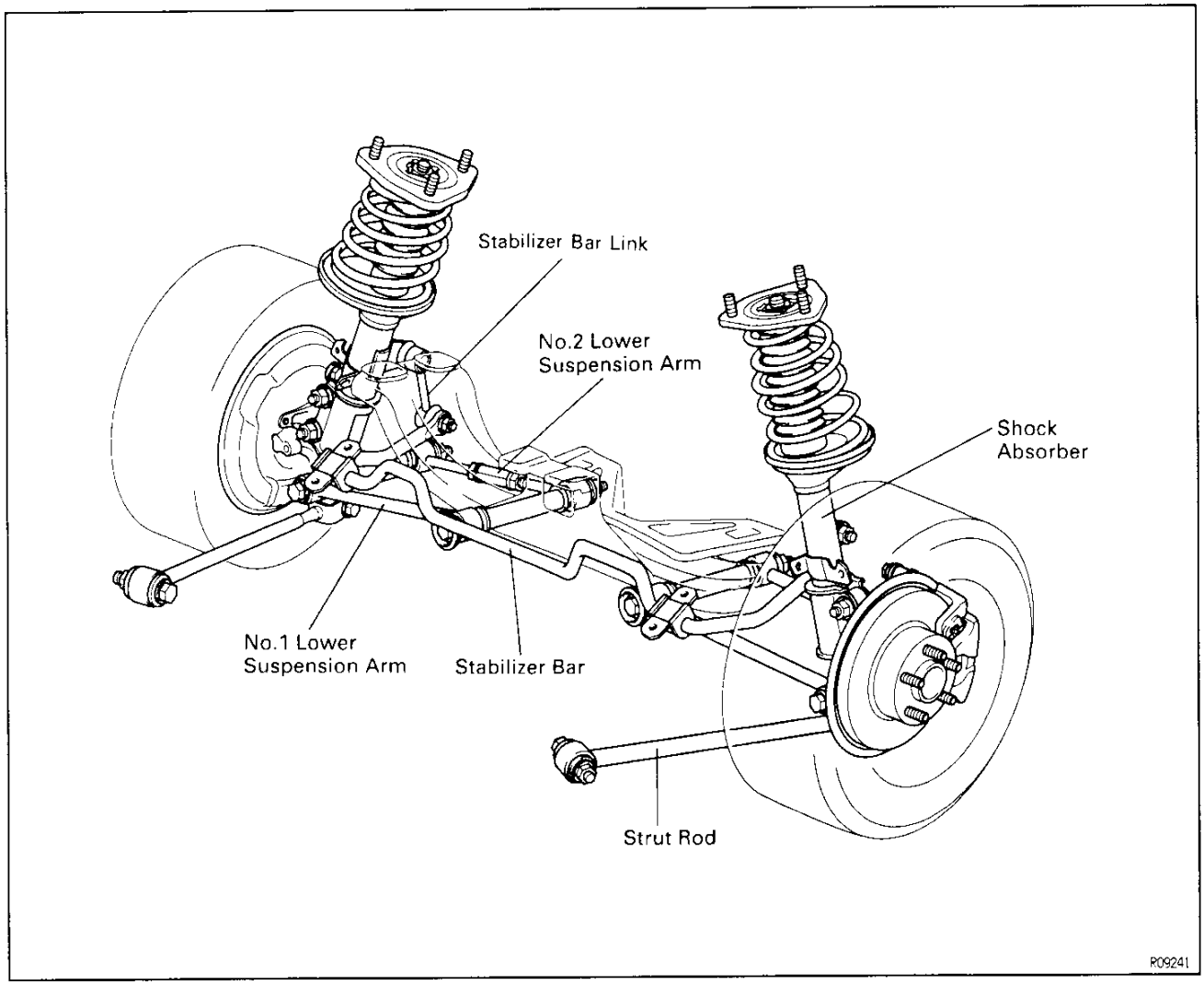

SA

Downloaded from www.Manualslib.com manuals search engine

PREPARATION

SST (SPECIAL SERVICE TOOLS)

SA03K-01

	09727-30020 Coil Spring Compressor	
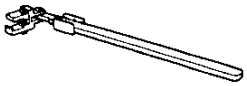	09729-22031 Front Spring Upper Seat Holder	

RECOMMENDED TOOLS

SA03L-01

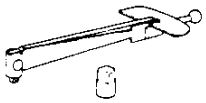	09025-00010 Small Torque Wrench	

SA

EQUIPMENT

SA03M-01

Torque wrench	

Downloaded from www.Manualslib.com manuals search engine

REAR SHOCK ABSORBER
COMPONENTS

SA03N-09

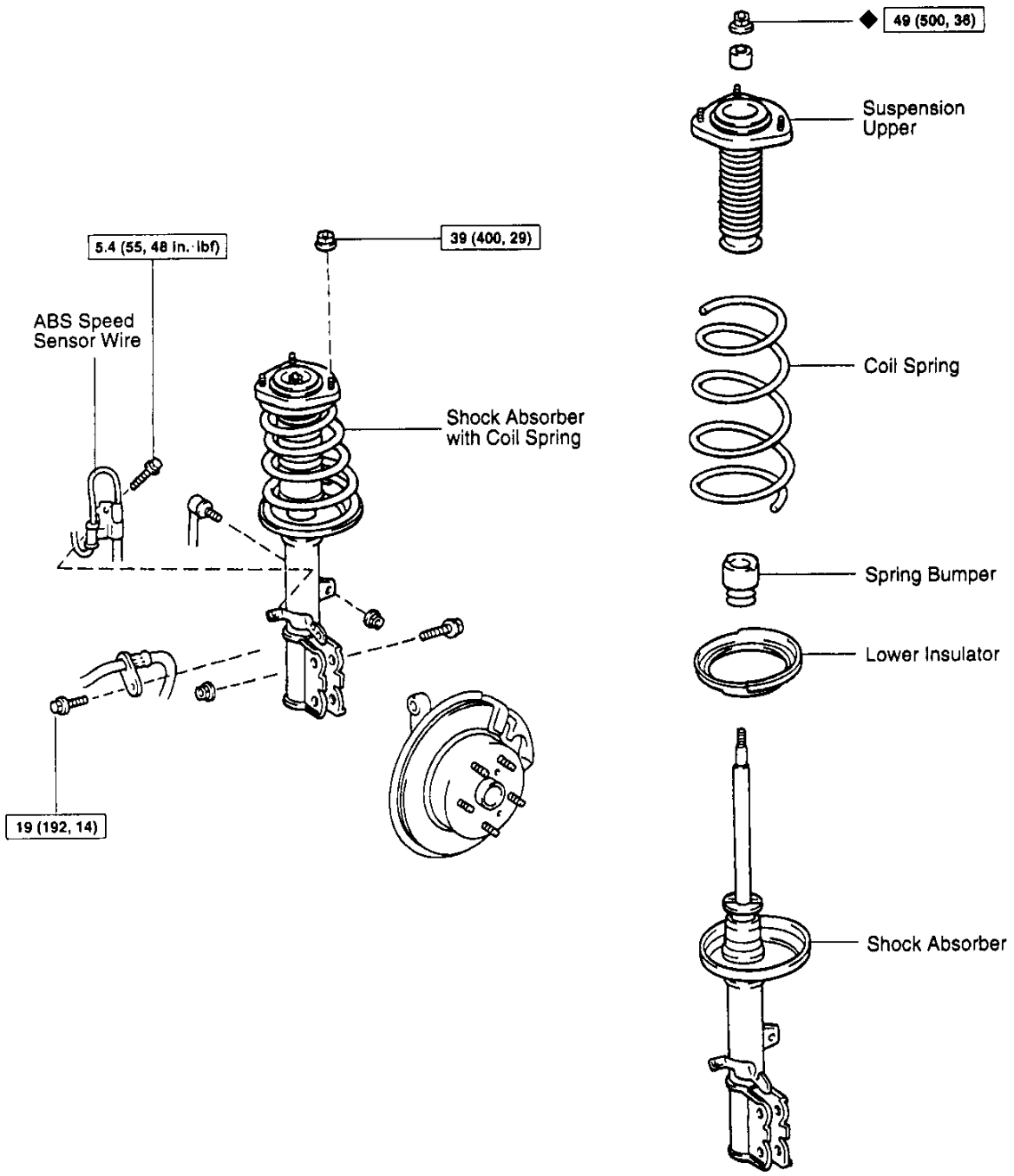

N·m (kgf·cm, ft·lbf) : Specified torque
◆ Non-reusable part

Y R10365

Downloaded from www.Manualslib.com manuals search engine

SA1C6-03

REAR SHOCK ABSORBER REMOVAL

1. **JACK UP VEHICLE AND REMOVE REAR WHEEL**

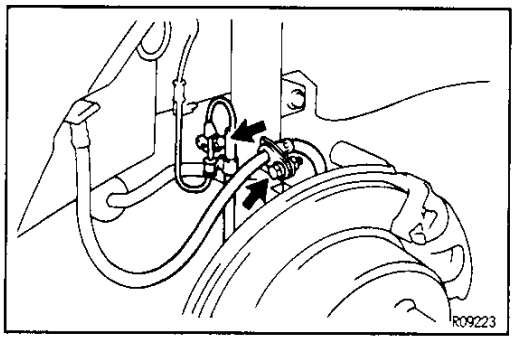

2. **DISCONNECT ABS SPEED SENSOR WIRE (w/ ABS) AND BRAKE HOSE FROM SHOCK ABSORBER**

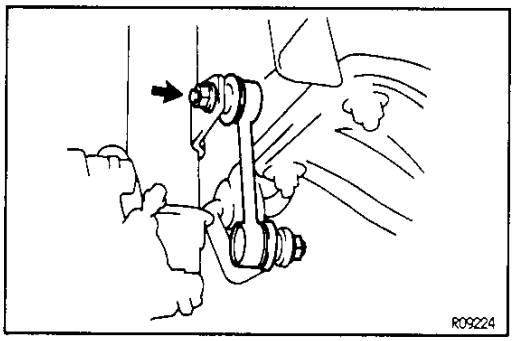

3. **DISCONNECT STABILIZER BAR LINK**
   Remove the nut and disconnect the stabilizer bar link from shock absorber.
   HINT: If the ball joint stud turns together with the nut, use a hexagon wrench to hold the stud.

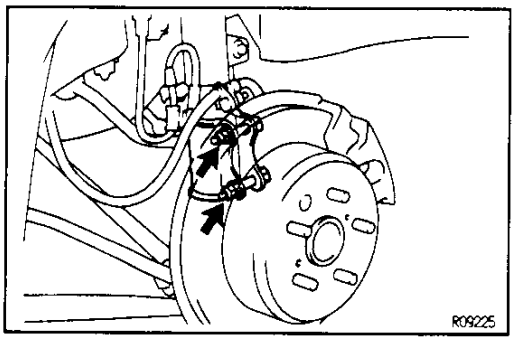

4. **REMOVE SHOCK ABSORBER WITH COIL SPRING**
   (a) Loosen the 2 nuts on lower side of the shock absorber.
   HINT: Do not remove the bolts.

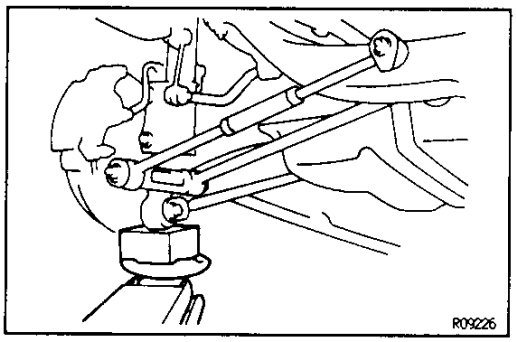

   (b) Support the rear axle carrier with a jack.

Downloaded from www.Manualslib.com manuals search engine

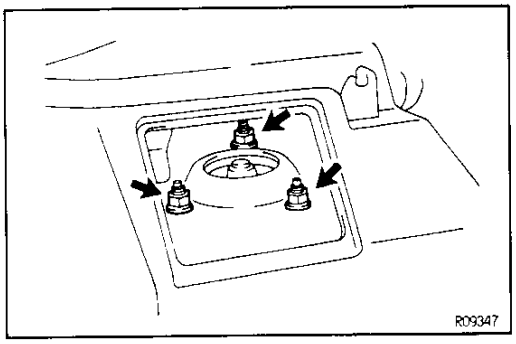

(c) Remove the 3 upper support nuts.

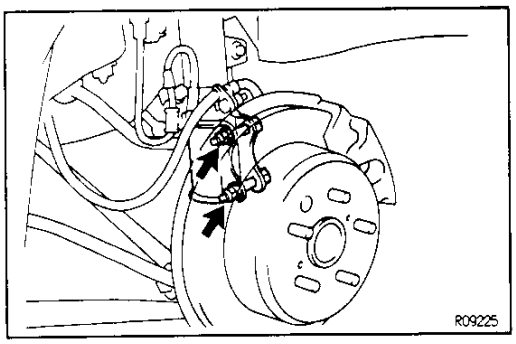

(d) Lower the rear axle carrier and remove the 2 bolts.
(e) Remove the shock absorber with coil spring.

SA

REAR SHOCK ABSORBER DISASSEMBLY SA1C7-01

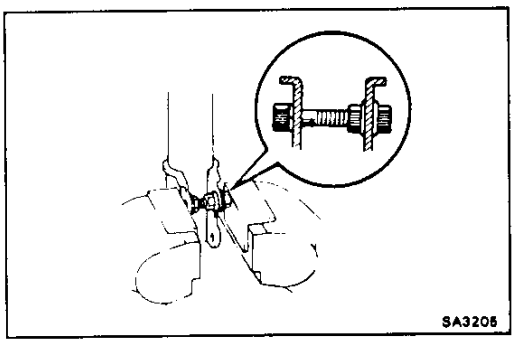

1. CLAMP SHOCK ABSORBER IN VISE
Install a bolt and 2 nuts to the bracket at the lower portion of the shock absorber and secure it in a vise.

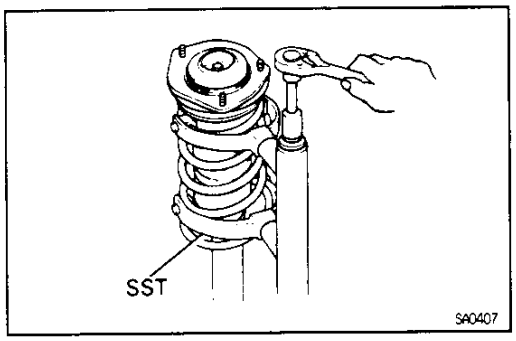

2. REMOVE COIL SPRING
(a) Using SST, compress the coil spring.
SST 09727–30020
NOTICE: Do not use an impact wrench. It will damage the SST.

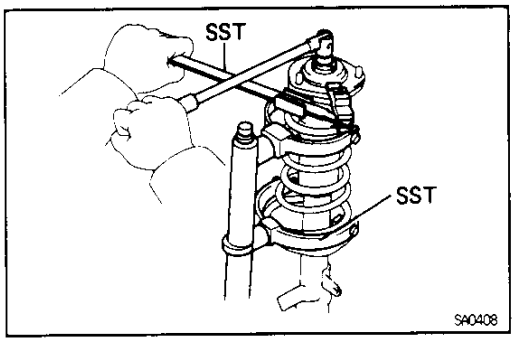

(b) Using SST to hold the upper support, remove the nut.
SST 09729–22031

Downloaded from www.Manualslib.com manuals search engine

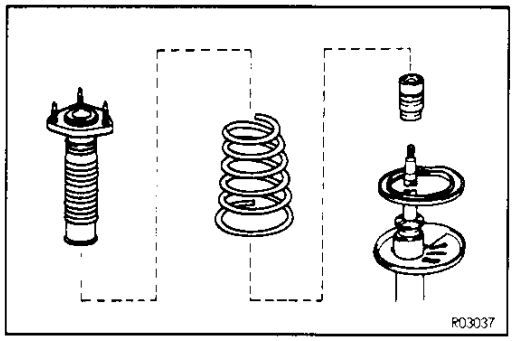

(c) Remove the following parts:
- Collar
- Suspension upper support
- Coil spring
- Spring bumper
- Lower insulator

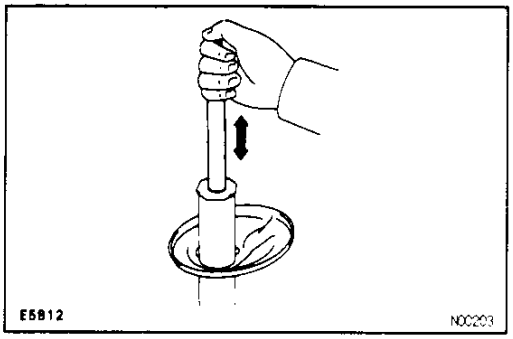

REAR SHOCK ABSORBER INSPECTION

8A080-0A

INSPECT SHOCK ABSORBER

Compress and extend the shock absorber rod and check that there is no abnormal resistance or unusual operation sounds.

If there is any abnormality, replace the shock absorber with a new one.

NOTICE: When discarding the shock absorber, use the following procedure.

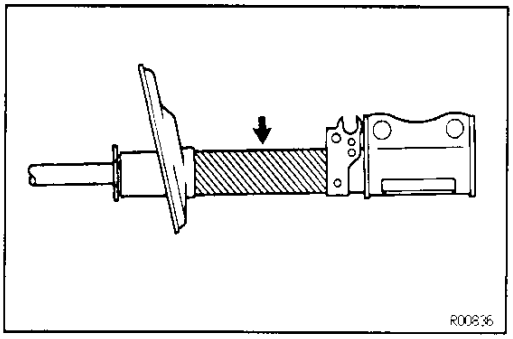

REAR SHOCK ABSORBER DISPOSAL

1. **FULLY EXTEND SHOCK ABSORBER ROD**
2. **DRILL HOLE TO REMOVE GAS FROM CYLINDER**

   Using a drill, make a hole in the cylinder, as shown to remove the gas inside.

   CAUTION: The gas coming out is harmless, but be careful of chips which may fly up when drilling.

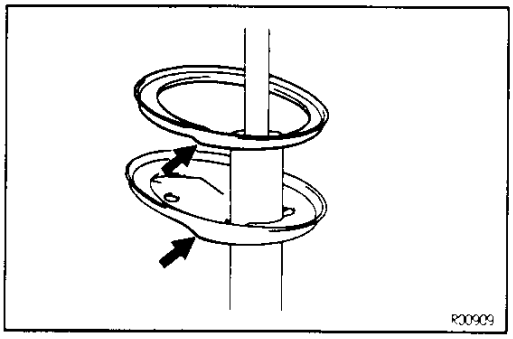

REAR SHOCK ABSORBER ASSEMBLY

8A1C0-02

1. **INSTALL LOWER COIL SPRING INSULATOR ONTO SHOCK ABSORBER**

   HINT: Fit the gap of the insulator, as shown.

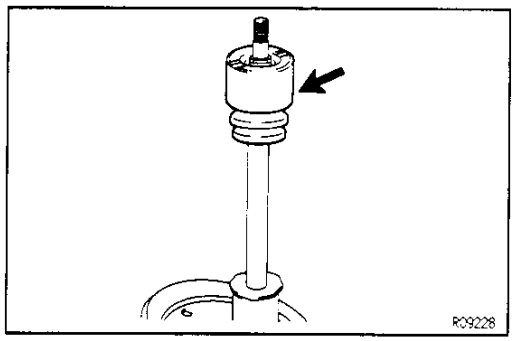

2. **INSTALL SPRING BUMPER TO PISTON ROD**

Downloaded from www.Manualslib.com manuals search engine

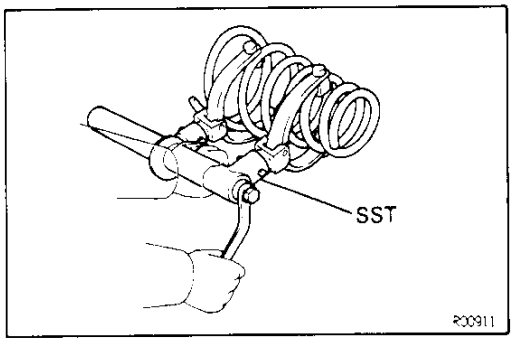

3. INSTALL COIL SPRING

(a) Using SST, compress the coil spring.
SST 09727–30020
NOTICE: Do not use an impact wrench. It will damage the SST.

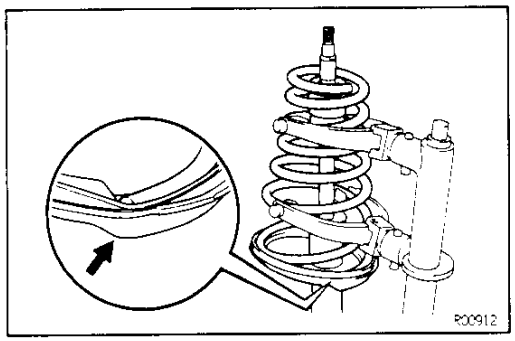

(b) Install the coil spring to the shock absorber.
HINT: Fit the lower end of the coil spring into the gap of the lower seat.

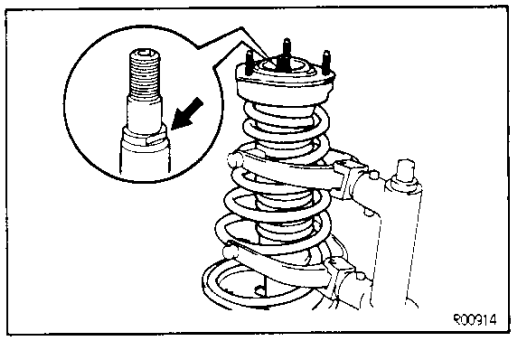

4. INSTALL DUST COVER AND UPPER SUPPORT

(a) Install the dust cover and upper suport to the piston rod.

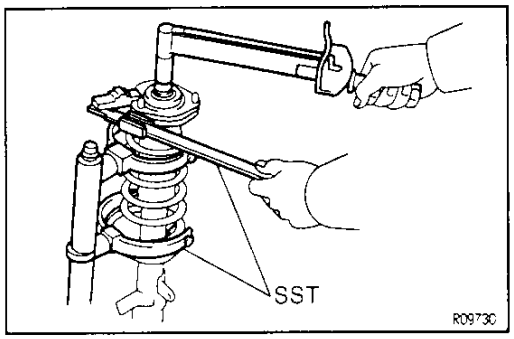

(b) Install the collar.
(c) Using SST to hold the upper support, install a new nut.
SST 09729–22031
Torque: 49 N·m (500 kgf·cm, 36 ft·lbf)

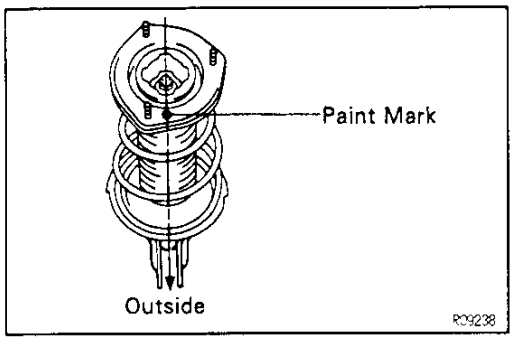

(d) Rotate the upper support and set it in the direction shown in the illustration.
(e) Remove the SST.
HINT: After removing SST, again check the direction of the upper support.

Downloaded from www.Manualslib.com manuals search engine

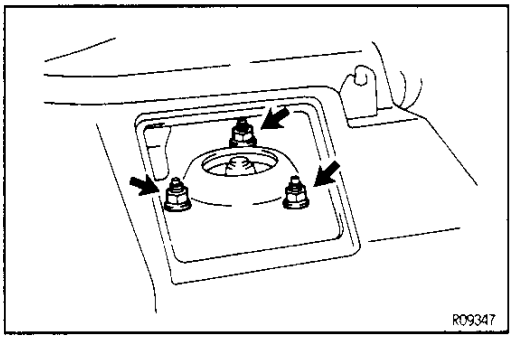

REAR SHOCK ABSORBER INSTALLATION

SA1C9-02

1. **INSTALL SHOCK ABSORBER WITH COIL SPRING**
   Place the shock absorber and install the 3 upper support nuts.
   Torque: 39 N·m (400 kgf·cm, 29 ft·lbf)

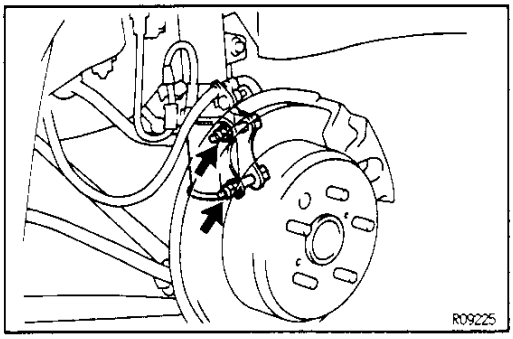

2. **CONNECT SHOCK ABSORBER TO REAR AXLE CARRIER**
   Jack up the rear axle carrier and connect shock absorber with the 2 bolts and nuts.
   Torque: 255 N·m (2,600 kgf·cm, 188 ft·lbf)

SA

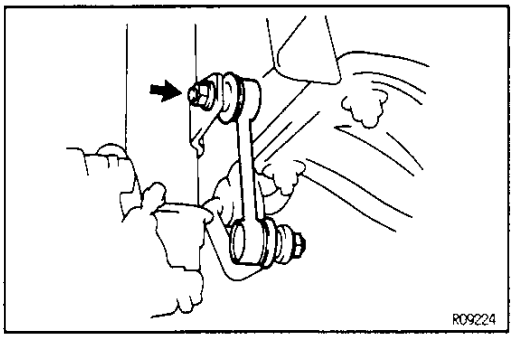

3. **CONNECT STABILIZER BAR LINK TO SHOCK ABSORBER**
   Connect the stabilizer bar link with the nut.
   Torque: 44 N·m (450 kgf·cm, 33 ft·lbf)
   HINT: If the ball joint stud turns together with the nut, use a hexagon wrench to hold the stud.

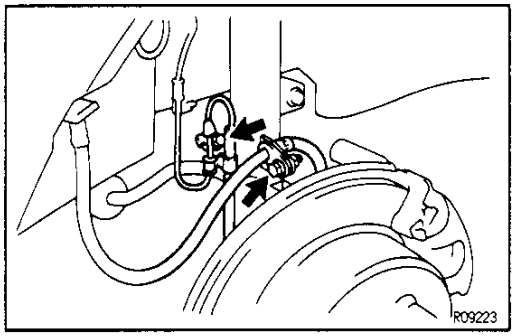

4. **INSTALL ABS SPEED SENSOR WIRE (w/ ABS) AND BRAKE HOSE TO SHOCK ABSORBER**
   Torque:
   Brake hose: 19 N·m (192 kgf·cm, 14 ft·lbf)
   ABS wire: 5.4 N·m (55 kgf·cm, 48 in.·lbf)
5. **INSTALL REAR WHEEL AND LOWER VEHICLE**
   Torque: 103 N·m (1,050 kgf·cm, 76 ft·lbf)

Downloaded from www.Manualslib.com manuals search engine

LOWER SUSPENSION ARM AND STRUT ROD
COMPONENTS

8A038-06

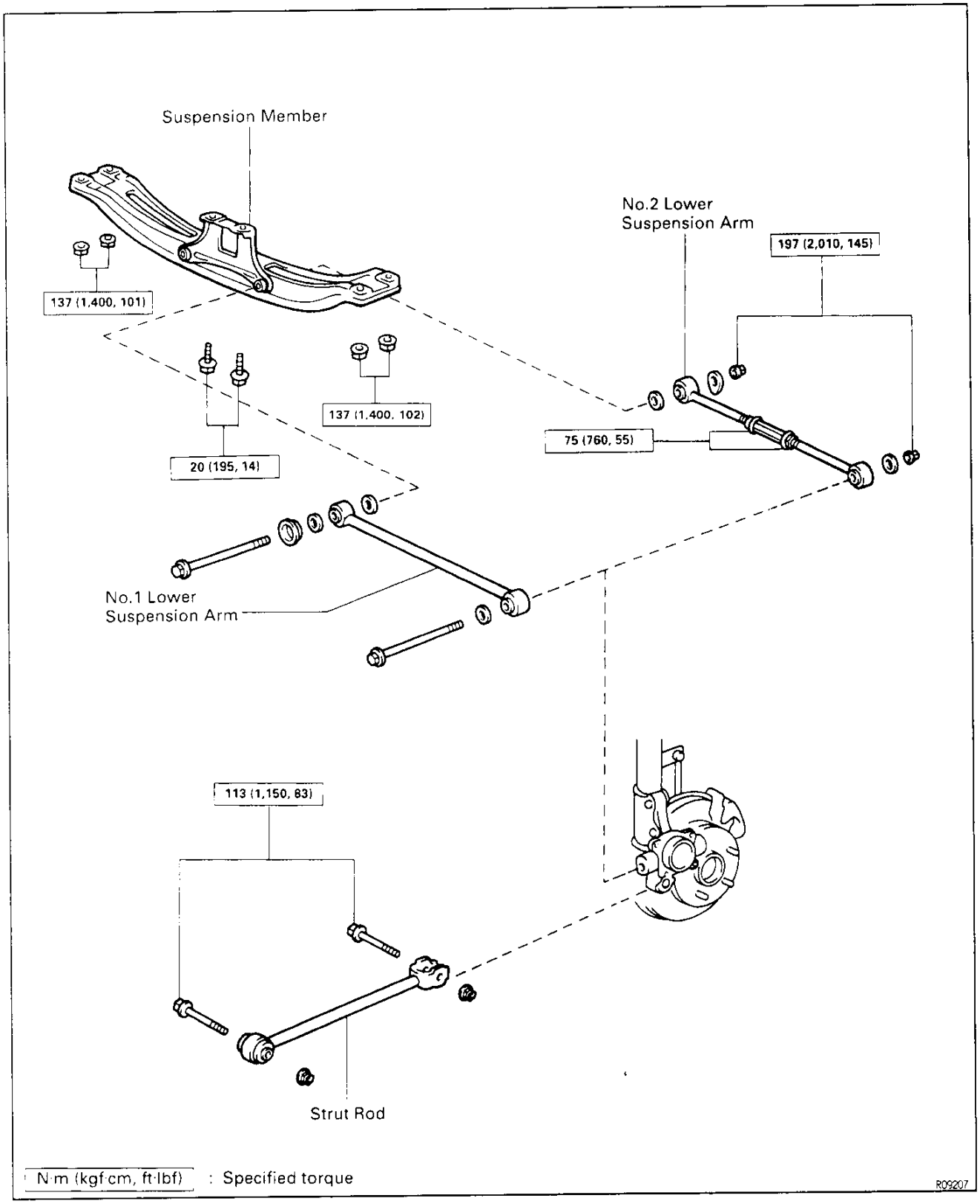

SA

Downloaded from www.Manualslib.com manuals search engine

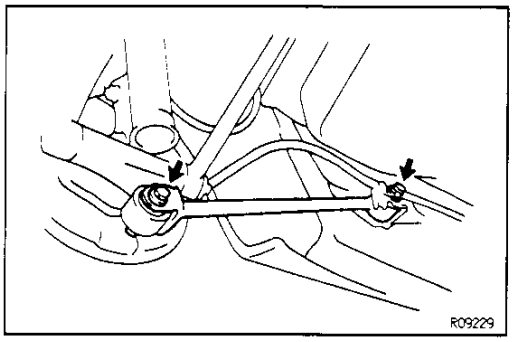

LOWER SUSPENSION ARM AND STRUT ROD REMOVAL

SA1CA-01

1. JACK UP VEHICLE AND REMOVE REAR WHEEL

2. REMOVE STRUT ROD

(a) Remove the 2 bolts and nuts.

(b) Remove the strut rod.

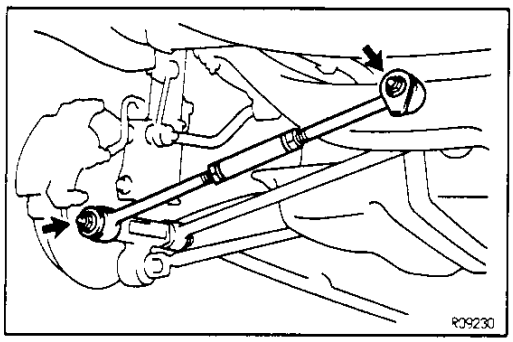

3. REMOVE NO.2 LOWER SUSPENSION ARM

(a) Remove the 2 nuts and washers.

(b) Remove the No.2 lower suspension arm.

SA

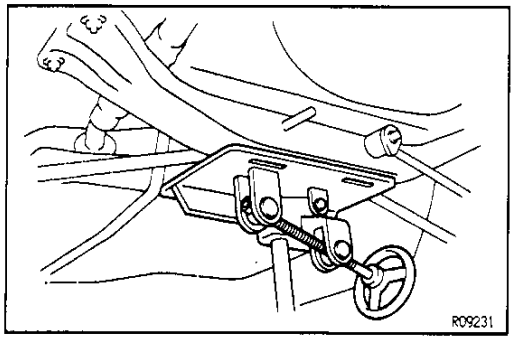

4. REMOVE NO.1 LOWER SUSPENSION ARM

(a) Support the suspension member with a jack.

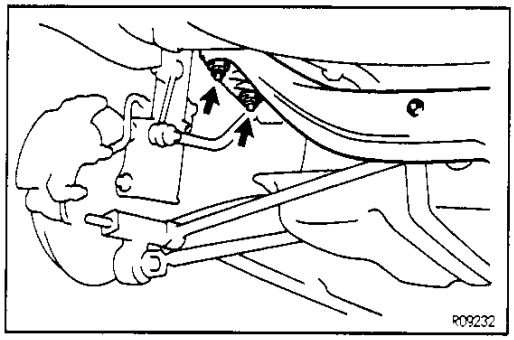

(b) Remove the 4 nuts from suspension member.

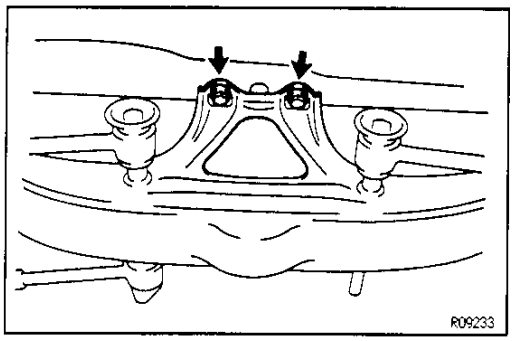

(c) Remove the 2 bolts.

Downloaded from www.Manualslib.com manuals search engine

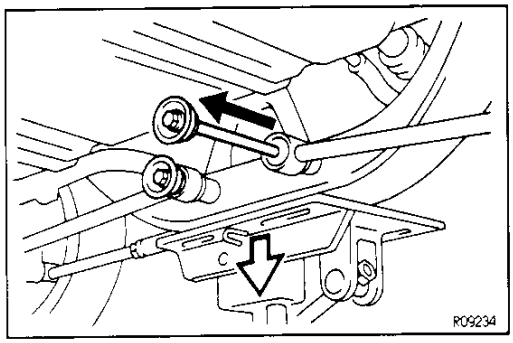

(d) Lower the suspension member to pull out the lower suspension arm set bolt.

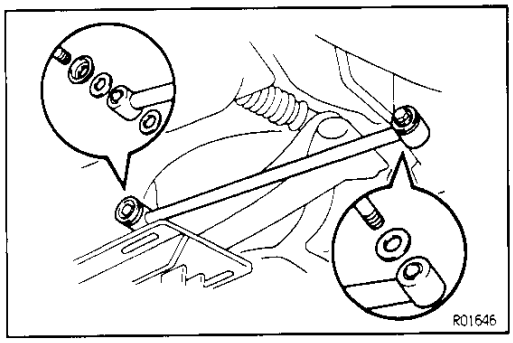

(e) Remove the No.1 lower suspension arm with the 2 bolts and the washer.

SA

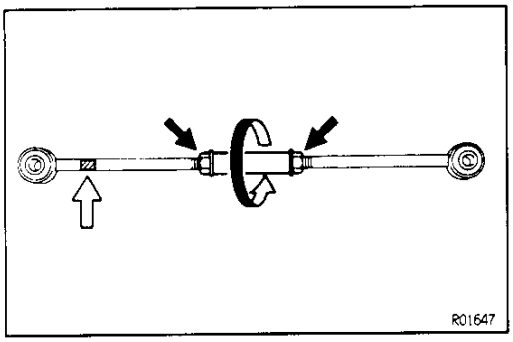

NO.2 LOWER SUSPENSION ARM DISASSEMBLY

SA03U-07

DISASSEMBLE NO.2 LOWER SUSPENSION ARM

(a) Loosen the 2 lock nuts.
(b) Turn the adjusting tube and disassemble the No.2 lower suspension arm.
(c) Remove the lock nuts from the arms.

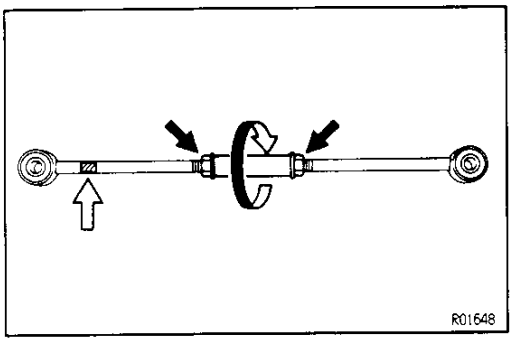

NO.2 LOWER SUSPENSION ARM ASSEMBLY

SA03V-08

ASSEMBLE NO.2 LOWER SUSPENSION ARM

(a) Install the lock nuts to the arms.
(b) Turn the adjusting tube and assemble the No.2 lower suspension arm.

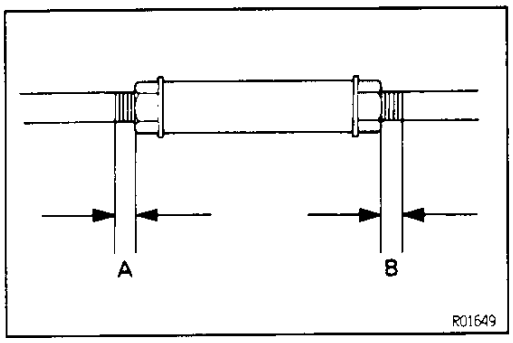

HINT: When assembling the No.2 lower suspension arm, try to make dimensions A and B shown in the illustration as close as possible.

Maximum difference:

3 mm (0.12 in.)

Downloaded from www.Manualslib.com manuals search engine

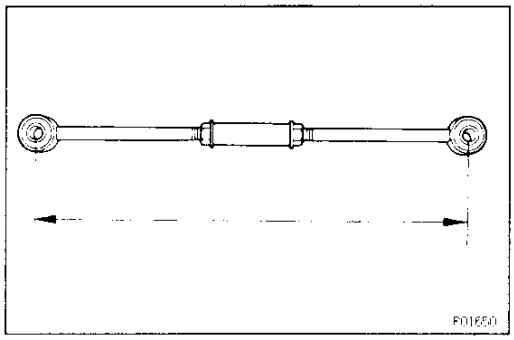

(c) Adjust the No.2 lower suspension arm length by turning the adjusting tube.
Arm length:
493.3 ± 1.5 mm (19.421 ± 0.059 in.)

(d) Temporarily tighten the 2 lock nuts.
HINT: After adjusting the rear wheel alignment, torque the lock nuts.

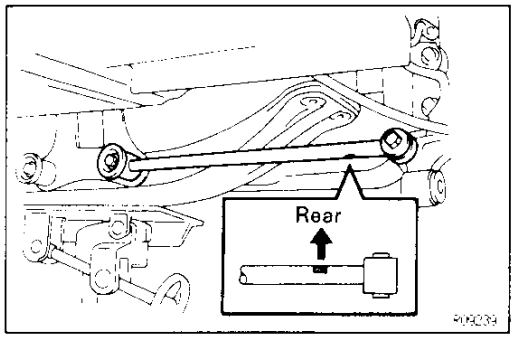

LOWER SUSPENSION ARM AND STRUT ROD INSTALLATION

SA1CB-02

1. INSTALL NO.1 LOWER SUSPENSION ARM

Install the No.1 lower suspension arm with the washer and the 2 bolts.
HINT: Face the paint mark to the outer rear.

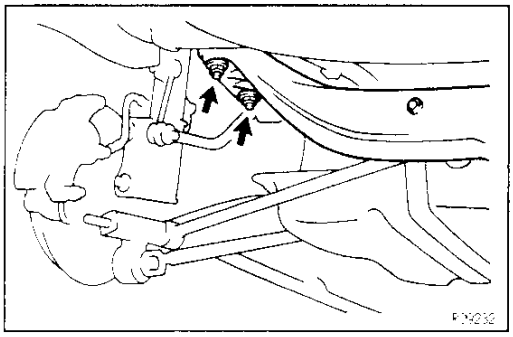

2. INSTALL SUSPENSION MEMBER TO BODY

(a) Jack up the suspension member.

(b) Install the suspension member with the 4 nuts.
Torque: 137 N·m (1,400 kgf·cm, 102 ft·lbf)

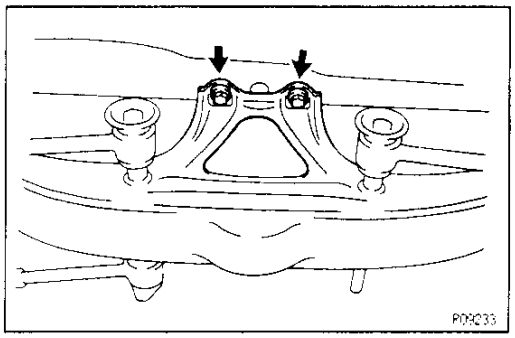

(c) Install the 2 bolts.
Torque: 20 N·m (195 kgf·cm, 14 ft·lbf)

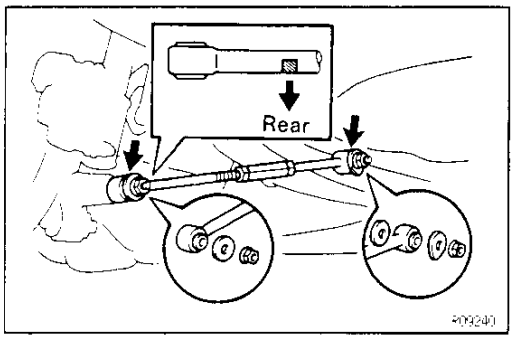

3. INSTALL NO.2 LOWER SUSPENSION ARM

(a) Install the No.2 lower suspension arm with the 3 washers.
HINT: Face the paint mark to the outer rear.

(b) Temporarily install the 2 lock nut.

Downloaded from www.Manualslib.com manuals search engine

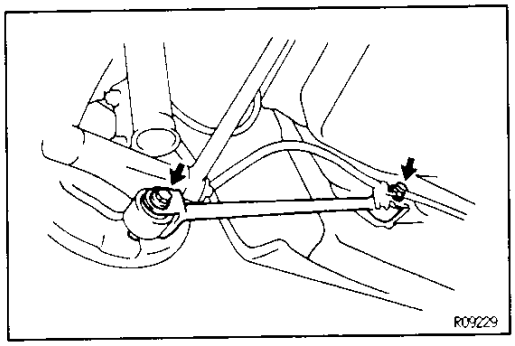

4. INSTALL STRUT ROD

Place the strut rod and temporarily install the 2 bolts and nuts.

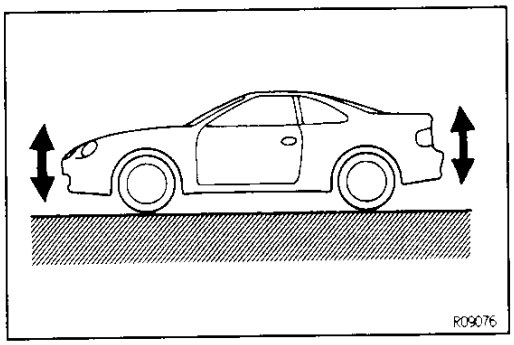

5. STABILIZE SUSPENSION

(a) Install the rear wheel and lower the vehicle.
Torque: 103 N·m (1,050 kgf·cm, 76 ft·lbf)

(b) Bounce the vehicle up and down several times to stabilize the suspension.

SA

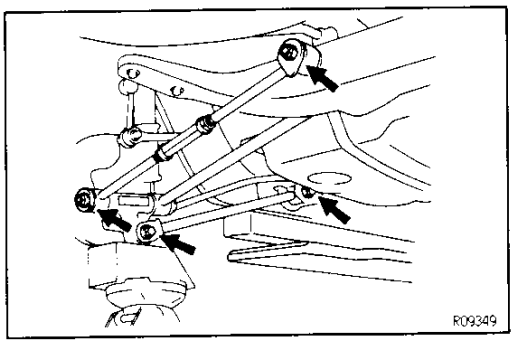

6. TORQUE BOLTS AND NUTS

(a) Jack up the vehicle and support the body with stands.

(b) Remove the rear wheel.

(c) Support the rear axle carrier with a jack.

(d) Torque the nuts of lower arm and the strut rod set bolts.
Torque:
Lower arm nut: 197 N·m (2,010 kgf·cm, 145 ft·lbf)
Strut rod bolt: 113 N·m (1,150 kgf·cm, 83 ft·lbf)

7. INSTALL REAR WHEEL AND LOWER VEHICLE
Torque: 103 N·m (1,050 kgf·cm, 76 ft·lbf)

8. INSPECT AND ADJUST REAR WHEEL ALIGNMENT
(See page SA–9)

9. TORQUE NO.2 LOWER SUSPENSION ARM LOCK NUTS
Torque: 75 N·m (760 kgf·cm, 55 ft·lbf)

Downloaded from www.Manualslib.com manuals search engine

STABILIZER BAR
COMPONENTS

SA08X-04

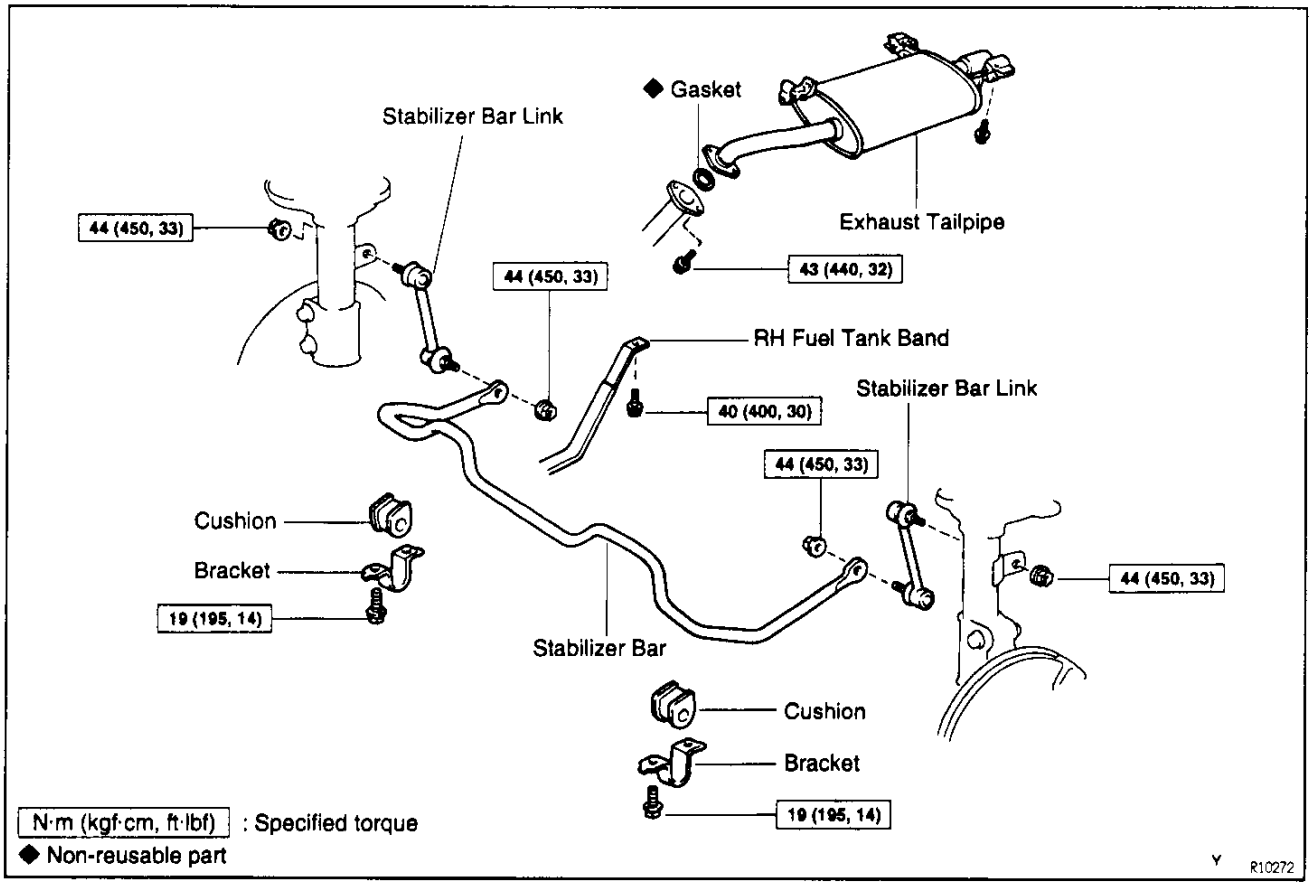

SA10K-01

STABILIZER BAR REMOVAL

1. REMOVE EXHAUST TAILPIPE

(a) Remove the 2 bolts and disconnet exhaust tailpipe.

(b) Remove the gasket.

2. REMOVE FULE TANK BAND

Remove the bolt and disconnect the RH fuel tank band.

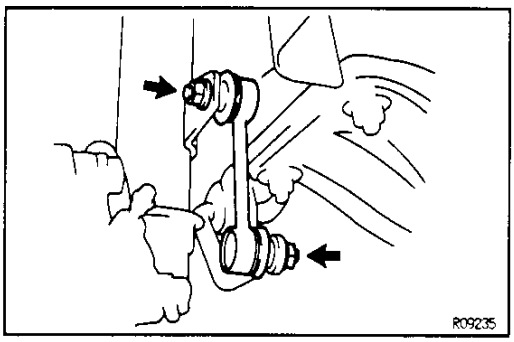

3. REMOVE BOTH SIDE STABILIZER BAR LINKS

Remove the 4 nuts and 2 stabilizer bar links.

HINT: If the ball joint turns together with the nut, use a hexagon wrench to hold the stud.

Downloaded from www.Manualslib.com manuals search engine

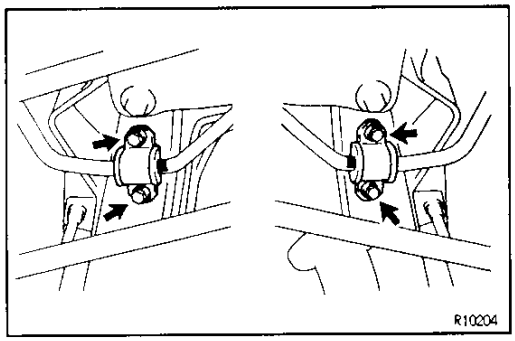

4. **REMOVE STABILIZER BAR**
   Remove the 4 bolts and stabilizer bar from the body.
5. **REMOVE BOTH SIDE CUSHIONS AND BRACKETS**
   Remove the cushions and brackets from the stabilizer bar.

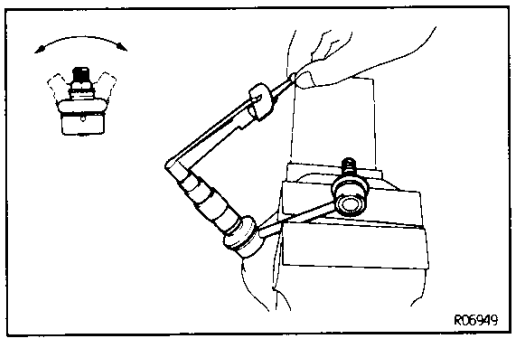

STABILIZER BAR LINK BALL JOINT INSPECTION

INSPECT BALL JOINT FOR ROTATION CONDITION

(a) Flip the ball joint stud back and forth 5 times, as shown in the illustration, before installing the nut.

(b) Using a torque wrench, turn the nut continuously one turn every 2 — 4 seconds and take the torque reading on the 5th turn.
Torque (turning):
0.05 — 1.0 N·m (0.5 — 10 kgf·cm, 2.6 — 8.7 in.·lbf)
If not within specification, replace the stabilizer bar link.

SA

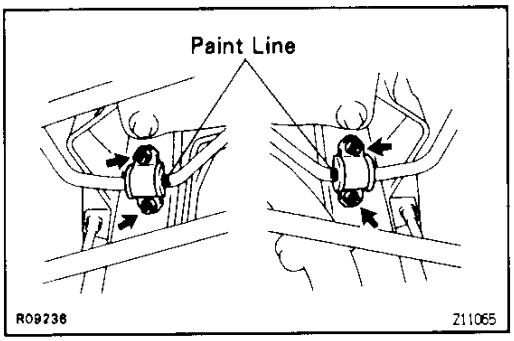

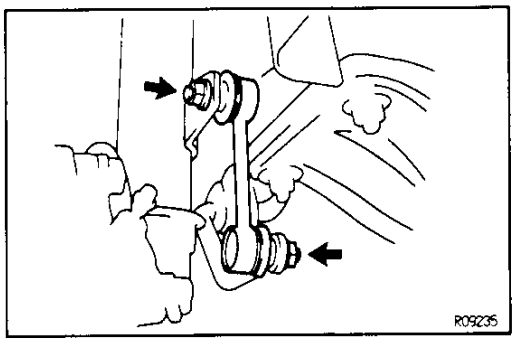

STABILIZER BAR INSTALLATION

1. **INSTALL STABILIZER BAR**

(a) Install the 2 cushions to the stabilizer bar.
HINT: Install the cushion to the outside of the paint line.

(b) Install the brackets.

(c) Install the stabilizer bar with the brackets, cushions and bolts.
Torque: 19 N·m (195 kgf·cm, 14 ft·lbf)

2. **INSTALL BOTH SIDE STABILIZER BAR LINKS**
   Install the stabilizer bar links to the stabilizer bar and shock absorber.
   Torque: 44 N·m (450 kgf·cm, 33 ft·lbf)
   HINT: If the ball joint stud turns together with the nut, use a hexagon wrench to hold the stud.
3. **INSTALL RH FUEL TANK BAND**
   Connect the RH fuel tank band and install the bolt.
   Torque: 40 N·m (400 kgf·cm, 30 ft·lbf)

Downloaded from www.Manualslib.com manuals search engine

4. INSTALL EXHAUST TAILPIPE

(a) Install the new gasket.

(b) Connect the exhaust tailpipe and install the 2 bolts.
Torque: 43 N·m (440 kgf·cm, 32 ft·lbf)

Downloaded from www.Manualslib.com manuals search engine

SERVICE SPECIFICATIONS

SA1DL-01

SERVICE DATA

Cold tire inflation pressure	Tire Size				Pressure
					Front / Rear
	195/65R14 89H				220 kPa (2.2 kgf/cm², 32 psi) / 220 kPa (2.2 kgf/cm², 32 psi)
	205/55R15 87V				240 kPa (2.4 kgf/cm², 35 psi) / 240 kPa (2.4 kgf/cm², 35 psi)
Vehicle height	Tire Size				Height
					Front / Rear
	195/65R14 205/55R15				182.6 mm (7.19 in.) / 250.0 mm (9.84 in.)
Front wheel alignmen	Toe – in (total)	Super Strut Type			0° 12′ ± 6′ (2 ± 1 mm, 0.08 ± 0.04 in.)
		MacPherson Strut Type			0° ± 6′ (0 ± 1 mm, 0 ± 0.04 in.)
	Wheel angle				Inside Wheel / Outside Wheel (reference)
		Super Strut Type			34° 28′ ± 2° / 28° 22′
		MacPherson Strut Type			36° 54′ ± 2° / 30° 44′
	Camber	Super Strut Type			–0° 13′ ± 45′
		MacPherson Strut Type			–0° 46′ ± 45′
		Left – right error			45′ or less
	Caster	Super Strut Type			2° 36′ ± 45′
		MacPherson Strut Type			2° 05′ ± 45′
		Left – right error			45′ or less
	Steering axis inclination	Super Strut Type			2° 50′ ± 45′
		MacPherson Strut Type			14° 58′ ± 45′
Front axle	Axle bearing backlash				0.05 mm (0.0020 in.) or less
	Axle hub deviation				0.05 mm (0.0020 in.) or less
Front drive shaft	Drive shaft standard length	3S-GE	w/ LSD	LH	573.2 ± 5.0 mm (22.567 ± 0.197 in.)
				RH	861.5 ± 5.0 mm (33.917 ± 0.197 in.)
			w/o LSD	LH	576.2 ± 5.0 mm (22.685 ± 0.197 in.)
				RH	863.8 ± 5.0 mm (34.007 ± 0.197 in.)
		3S-FE and 5S-FE	A/T	LH	576.7 ± 5.0 mm (22.713 ± 0.197 in.)
				RH	862.0 ± 5.0 mm (33.937 ± 0.197 in.)
			M/T	LH	572.4 ± 5.0 mm (22.535 ± 0.197 in.)
				RH	857.5 ± 5.0 mm (33.760 ± 0.197 in.)
		7A-FE		LH	559.2 ± 5.0 mm (22.016 ± 0.197 in.)
				RH	854.9 ± 5.0 mm (33.657 ± 0.197 in.)
Front suspension	Lower ball joint turning torque				1.0 – 4.9 N·m (10 – 50 kgf·cm, 8.7 – 43 in.lbf)
	Stabilizer bar link turning torque				0.05 – 1.0 N·m (0.5 – 10 kgf·cm, 0.4 – 8.7 in.lbf)

V05364

SA

Downloaded from www.Manualslib.com manuals search engine

Rear wheel aligment	Toe – in (total)		0° 21′ ± 6′ (3.5 ± 1 mm, 0.14 ± 0.04 in.)
	Camber	3S-GE	–1° 11′ ± 45′
		3S-FE	–1° 11′ ± 45′
		5S-FE	–1° 10′ ± 45′
		7A-FE	–1° 16′ ± 45′
		Left – right error	45′ or less
Rear axle	Axle bearing backlash		0.05 mm (0.0020 in.) or less
	Axle hub deviation		0.07 mm (0.0028 in.) or less
Rear suspension	Stabilizer bar link turning torque		0.05 – 1.0 N·m (0.5 – 10 kgf·cm, 0.4 – 8.7 in.·lbf)

V05365

SA

Downloaded from www.Manualslib.com manuals search engine

SA043-01

TORQUE SPECIFICATIONS
(FRONT)

Part tightened	N·m	kgf·cm	ft·lbf
(SUPER STRUT SUSPENSION)			
Tie rod end lock nut	75	760	55
Steering knuckle x Shock absorber (Upper ball joint)	103	1,010	73
Steering knuckle x Brake caliper	107	1,090	79
Steering knuckle x Tie rod end	49	500	36
Axle hub nut (Drive shaft lock nut)	216	2,200	159
Drive shaft x Drive shaft center bearing bracket	64	650	47
Lower No.1 arm x Lower ball joint attachment	118	1,205	87
Steering knuckle x Lower ball joint attachment	108	1,100	80
Lower No.2 arm x Lower ball joint attachment	118	1,205	87
Lower No.1 arm x Camber control arm	152	1,550	112
Camber control arm x Shock absorber	172	1,750	127
Lower No.1 arm x Front sub—frame	157	1,600	116
Lower No.2 arm x Front sub—frame	167	1,700	123
Front sub—frame x Body	175	1,800	130
Steering knuckle x Dust cover	8.3	85	74 in.·lbf
ABS speed sensor set bolt	8.0	82	71 in.·lbf
ABS speed sensor wire clamp set bolt	5.0	51	44 in.·lbf
Suspension upper support x Body	80	800	59
Suspension upper support x Piston rod	47	475	34
Stabilizer bar x Stabilizer bar link	44	450	33
Stabilizer bar link x Shock absorber	44	450	33
Stabilizer bar bushing retainer x Front sub—frame	19	195	14
Front sub—frame x Body	127	1,300	94
Front sub—frame x Center member	80	820	59
Center member x Engine mounting	39	400	29
Center member x Body	35	360	26
Front sub—frame x Gear housing	58	590	43
(MACPHERSON STRUT SUSPENSION)			
Tie rod end lock nut	75	760	55
Steering knuckle x Shock absorber	153	1,560	113
Steering knuckle x Brake caliper	107	1,090	79
Steering knuckle x Tie rod end	49	500	36
Axle hub nut (Drive shaft lock nut)	216	2,200	159
Lower ball joint x Lower arm	127	1,300	94
Lower ball joint x Steering knuckle	103	1,050	76
Lower arm (Front) x Front sub—frame	157	1,600	116
Lower arm (Rear) x Front sub—frame	167	1,700	123
Front sub—frame x Body	175	1,800	130
Steering knuckle x Dust cover	8.3	85	74 in.·lbf

SA

Downloaded from www.Manualslib.com manuals search engine

Part tightened	N·m	kgf·cm	ft·lbf
Suspension upper support x Body	80	820	59
Suspension upper support x Piston rod	47	480	35
Brake hose x Shock absorber	19	192	14
ABS wire x Shock absorber	5.4	55	48 in.·lbf
Stabilizer bar x Stabilizer bar link	44	450	33
Stabilizer bar link x Lower arm	44	450	33
Stabilizer bar bushing retainer x Front sub—frame	19	195	14
Front sub—frame x Body	127	1,300	94
Center member x Front sub—frame	80	820	59
ABS speed sensor set bolt	8.0	82	71 in.·lbf
Exhaust pipe bracket x Front sub—frame	19	195	14

(REAR)

Part tightened	N·m	kgf·cm	ft·lbf
Brake caliper x Rear axle carrier	47	475	34
Axle bearing set bolt	80	820	59
Shock absorber x Rear axle carrier	255	2,600	188
Brake hose x Shock absorber	19	192	14
ABS speed sensor set bolt	8.0	82	71 in.·lbf
ABS speed sensor wire x Shock absorber	5.4	55	48 in.·lbf
Suspension upper support x Body	39	400	29
Suspension upper support x Piston rod	49	500	36
Lower suspension No.1, No.2 arm x Suspension member	197	2,010	145
Lower suspension No.1, No.2 arm x Rear axle carrier	197	2,010	145
Strut rod x Body	113	1,150	83
Strut rod x Rear axle carrier	113	1,150	83
Suspension member x Body	137	1,400	101
Stabilizer bar bushing retainer	19	195	14
Stabilizer bar link set nut	44	450	33
RH fuel tank band x Body	40	400	30
Exhaust tailpipe x Exhaust pipe	43	440	32

Downloaded from www.Manualslib.com manuals search engine

BRAKE SYSTEM

GENERAL DESCRIPTION ..... BR– 2
DESCRIPTION ..... BR– 2
OPERATION ..... BR– 2
PREPARATION ..... BR– 4
TROUBLESHOOTING ..... BR– 6
CHECK AND ADJUSTMENT ..... BR– 7
MASTER CYLINDER ..... BR– 11
BRAKE BOOSTER ..... BR– 21
FRONT BRAKE ..... BR– 27
(7A–FE, 3S–FE) ..... BR– 27
FRONT BRAKE ..... BR– 35
(5S–FE, 3S–GE w/o Super Strut Type) ... BR– 35
FRONT BRAKE ..... BR– 44
(3S–GE w/ Super Strut Type) ..... BR– 44
REAR BRAKE ..... BR– 52
(Disc Brake) ..... BR– 52
REAR BRAKE ..... BR– 60
(Parking Brake for Rear Disc Brake) ..... BR– 60
PROPORTIONING VALVE (P VALVE) ..... BR– 67
ANTI–LOCK BRAKE SYSTEM (ABS) ..... BR– 69
DESCRIPTION ..... BR– 69
DIAGNOSIS SYSTEM ..... BR– 73
SPEED SENSOR AND DECELERATION SENSOR DIAGNOSIS SYSTEM ..... BR– 82
DECELERATION SENSOR OPERATION DIAGNOSIS SYSTEM ..... BR– 86
ABS ACTUATOR ..... BR– 87
ABS RELAY ..... BR– 92
FRONT SPEED SENSOR ..... BR– 93
REAR SPEED SENSOR ..... BR– 97
ANTI–LOCK BRAKE SYSTEM CIRCUIT BR–101
SERVICE SPECIFICATIONS BR–103

Downloaded from www.Manualslib.com manuals search engine

GENERAL DESCRIPTION

BR002-07

1. Care must be taken to replace each part properly as it could affect the performance of the brake system and result in a driving hazard. Replace the parts with parts of the same part number or equivalent.
2. It is very important to keep parts and the area clean when repairing the brake system.
3. If the vehicle is equipped with a mobile communication system, refer to the precaution in the IN section.

DESCRIPTION

BR003-02

The service brakes consist of a foot brake which changes rotational energy to thermal energy to stop the vehicle while it is being driven and a parking brake to keep the vehicle from moving while it is parked.

BR

OPERATION

FOOT BRAKE

BR004-0A

When the brake pedal is depressed, a vacuum builds up in the booster which amplifies the pedal force, pressing on the piston in the master cylinder. The piston movement raises the hydraulic pressure in the cylinder. This hydraulic pressure is then applied to each respective brake cylinder and wheel cylinder, and acts to press the brake pads and shoes against the rotating discs and brake drum. The resulting friction converts the rotational energy to thermal energy, stopping the vehicle.

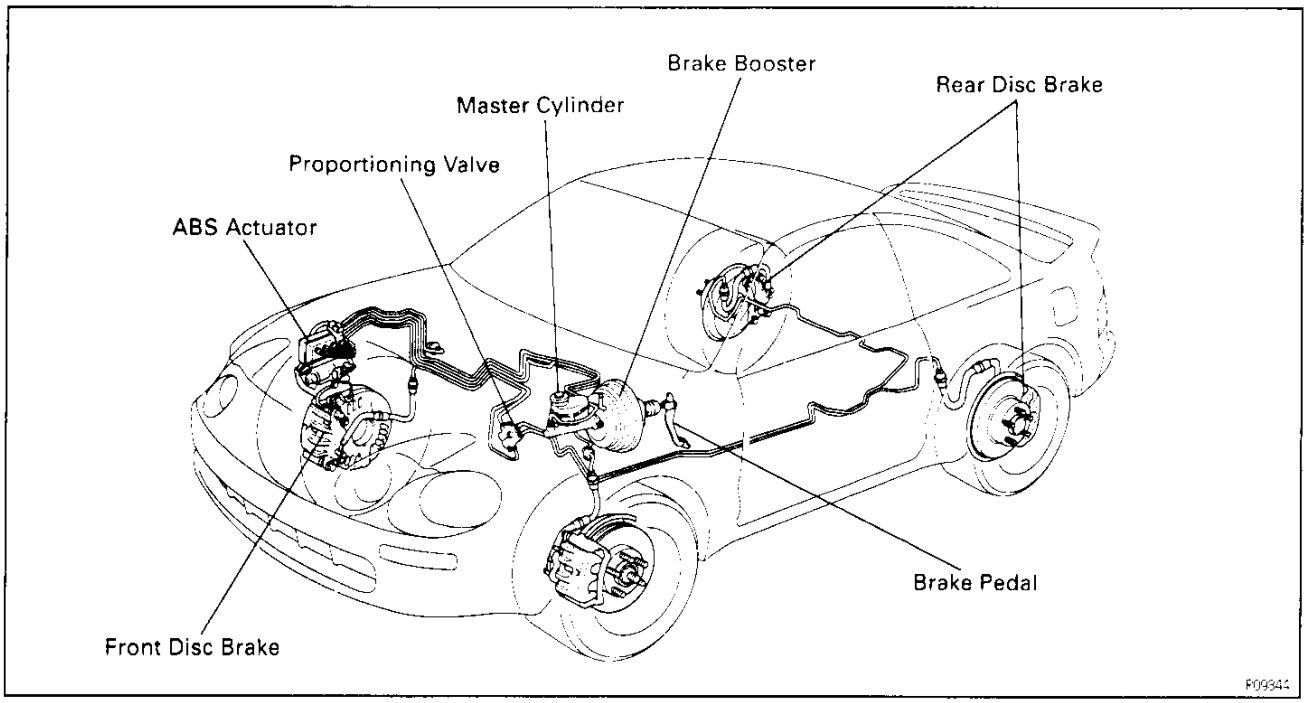

Downloaded from www.Manualslib.com manuals search engine

PARKING BRAKE

When the parking brake lever is pulled the parking brake shoe lever is pulled via the parking brake wire. This causes the shoe strut to push the front shoe, which expands and is pressed against the disc. If the parking brake lever continues to be pulled, the contact point of the parking brake shoe lever and shoe strut then becomes the fulcrum so that the parking brake shoe lever causes the rear shoe to expand. This results in the disc being locked by the front shoe and rear shoe.

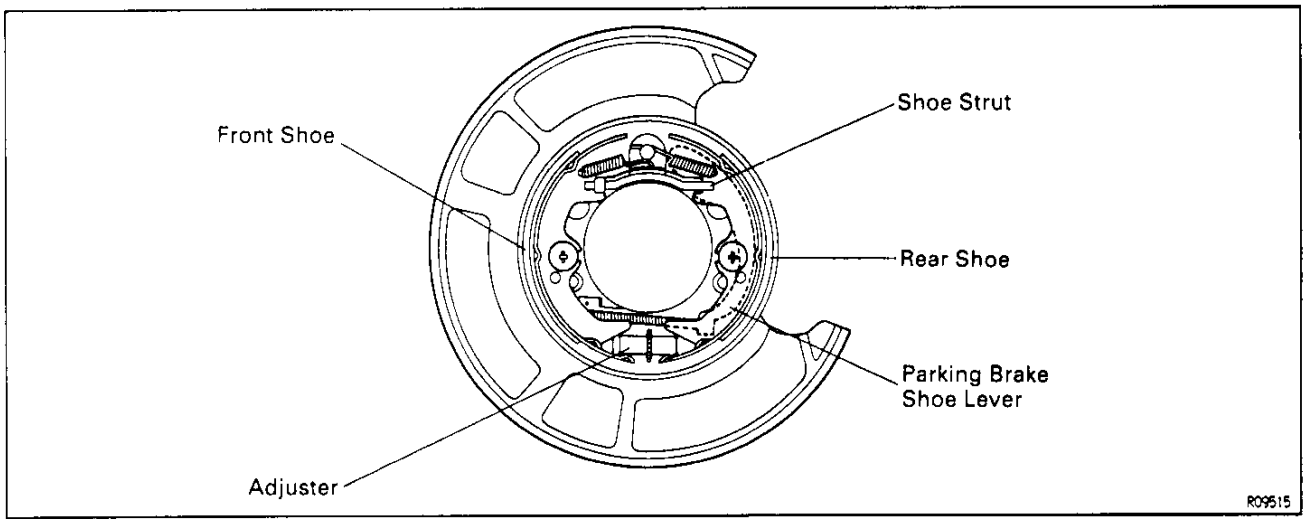

Downloaded from www.Manualslib.com manuals search engine

PREPARATION

SST (SPECIAL SERVICE TOOLS)

BR006-08

	09023–00100	Union Nut Wrench 10 mm	
	09709–29017	LSPV Gauge Set	
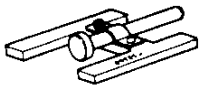	09737–00010	Brake Booster Push Rod Gauge	
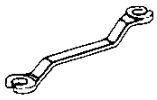	09751–36011	Brake Line Union Nut 10 x 12 mm Wrench	
	09843–18020	Diagnosis Check Wire	
	09990–00150	ABS Actuator Checker and Sub–harness	
	09990–00163	ABS Actuator Checker Sheet "A"	
	09990–00250	ABS Actuator Checker Sub–harness "G"	
	09990–00300	ABS Actuator Checker Sub–harness "I"	
	09990–00360	ABS Actuator Checker Sub–harness "L"	

BR

Downloaded from www.Manualslib.com manuals search engine

BR007-02

EQUIPMENT

Torque wrench	
Micrometer	Brake disc
Dial indicator	Brake disc
Vernier calipers	Brake drum

BR008-02

LUBRICANT

Item	Capacity	Classification
Brake fluid	—	SAEJ1703 or FMVSS No.116 DOT 3

Downloaded from www.Manualslib.com manuals search engine

TROUBLESHOOTING

BR006-05

Use the table below to help you find the cause of the problem. The numbers indicate the priority of the likely cause of the problem. Check each part in order. If necessary, replace these parts.

See page	–	–	BR-28, 36, 45, 53	BR-28, 36, 45, 53	BR-7	BR-11	BR-66	BR-10	–	BR-25	BR-66	BR-28, 36, 45, 53	BR-28, 36, 45, 53	BR-28, 36, 45, 53	BR-28, 36, 45, 53	BR-8	BR-28, 36, 45, 53	BR-28, 36, 45, 53	BR-28, 36, 45, 53	BR-28, 36, 45, 53	BR-28, 36, 45, 53	BR-28, 36, 45, 53	BR-28, 36, 45, 53	BR-60
Part Name / Trouble	Brake system (Fluid leaks)	Brake system (Air in)	Brake pad or lining (Worn)	Piston seal (Worn or damaged)	Brake pedal (Freeplay minimal)	Master cylinder (Faulty)	Rear brake (Shoe clearance out of adjustment)	Parking brake (Lever travel out of adjustment)	Parking brake wire (Sticking)	Booster push rod (Out of adjustment)	Anchor or return spring (Faulty)	Pad or lining (Cracked or distorted)	Piston (Stuck)	Pad or lining (oily)	Piston (Frozen)	Booster system (Vacuum leaks)	Pad support plate (Loose)	Installation bolt (Loose)	Sliding pin (Worn)	Rotor (Scored)	Pad or lining (Dirty)	Pad or lining (Hardened)	Anti-squeal shim (Damaged)	Hold-down spring (Damaged)
Low pedal or spongy pedal	1	2		3		5	4			6														
Brake drag					1	11	4	2	3	9	8	5	6		7	10								
Brake pull												5	1	2	3					4				
Hard pedal but brake inefficient	1	2	3				5			9		4		6		10				8		7		
Noise from brakes											8	1					4	2	5	3	6	7	9	10

V05408

BR

Downloaded from www.Manualslib.com manuals search engine

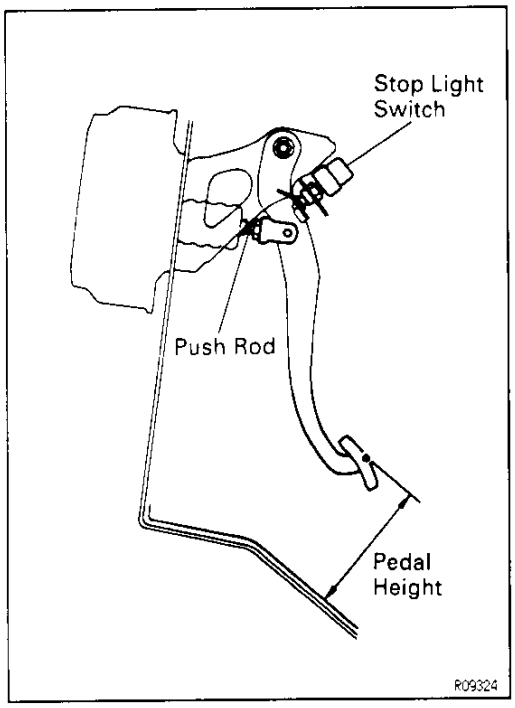

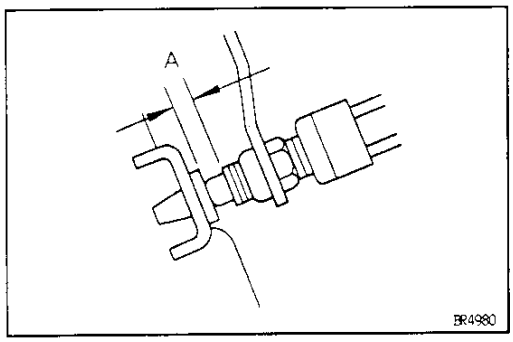

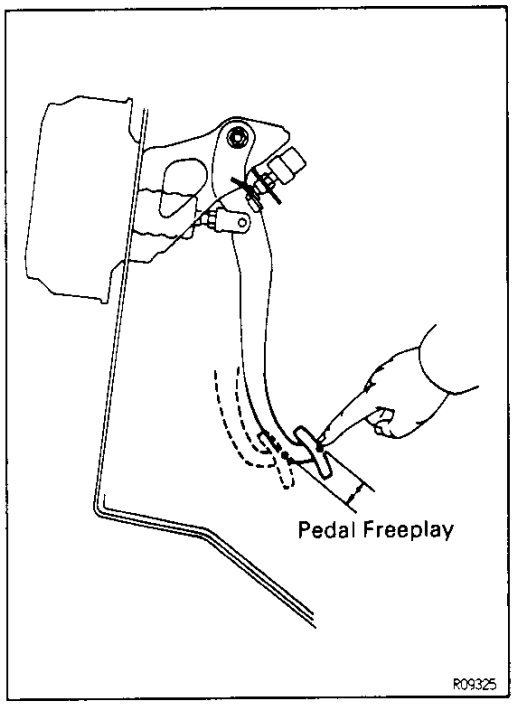

CHECK AND ADJUSTMENT

BRAKE PEDAL CHECK AND ADJUSTMENT

BR03D-0C

1. CHECK THAT PEDAL HEIGHT IS CORRECT, AS SHOWN

Pedal height from asphalt sheet:

LHD Vehicle:

151.9 – 161.9 mm (5.98 – 6.37 in.)

RHD Vehicle:

140.0 – 150.0 mm (5.50 – 5.91 in.)

If the pedal height is incorrect, adjust it.

2. IF NECESSARY, ADJUST PEDAL HEIGHT

(a) Remove the instrument finish lower panel and heater to register No.2 duct.

(b) Disconnect the connector from the stop light switch.

(c) Loosen the stop light switch lock nut and remove the stop light switch.

(d) Loosen the push rod lock nut.

(e) Adjust the pedal height by turning the pedal push rod.

(f) Tighten the push rod lock nut.

Torque: 25 N·m (260 kgf·cm, 19 ft·lbf)

(g) Install the stop light switch and turn it until it lightly contacts the pedal stopper.

(h) Turn the stop light switch back one turn.

(i) Check the clearance (A) between stop light switch and pedal.

Clearance:

0.5 – 2.4 mm (0.02 – 0.09 in.)

(j) Tighten the stop light switch lock nut.

(k) Connect the connector to the stop light switch.

(l) Check that the stop lights come on when the brake pedal is depressed, and go off when the brake pedal is released.

(m) After adjusting the pedal height, check the pedal free-play.

(n) Install the instrument finish lower panel and heater to register No.2 duct.

HINT: If clearance (A) between the stop light switch and the brake pedal stopper has been adjusted correctly, the pedal freeplay will meet the specifications.

3. CHECK THAT PEDAL FREEPLAY IS CORRECT, AS SHOWN

(a) Stop the engine and depress the brake pedal several times until there is no more vacuum left in the booster.

(b) Push in the pedal by hand until the beginning of the resistance is felt, then measure the distance, as shown.

BR

Downloaded from www.Manualslib.com manuals search engine

Pedal freeplay:

1 – 6 mm (0.04 – 0.24 in.)

If incorrect, check the stop light switch clearance. And if the clearance is OK, then troubleshoot the brake system.

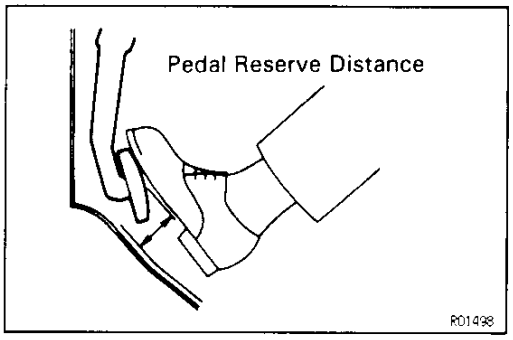

BR

4. CHECK THAT PEDAL RESERVE DISTANCE IS CORRECT

Release the parking brake.

With the engine running, depress the pedal and measure the pedal reserve distance, as shown.

Pedal reserve distance from asphalt sheet at 490 N (50 kgf, 110.2 lbf):

7A–FE, 3S–GE

LHD Vehicle: More than 90 mm (3.54 in.)

RHD Vehicle: More than 80 mm (3.14 in.)

5S–FE

More than 80 mm (3.14 in.)

3S–FE

LHD Vehicle: More than 90 mm (3.54 in.)

RHD Vehicle: More than 80 mm (3.14 in.)

If the reserve distance is incorrect, troubleshoot the brake system.

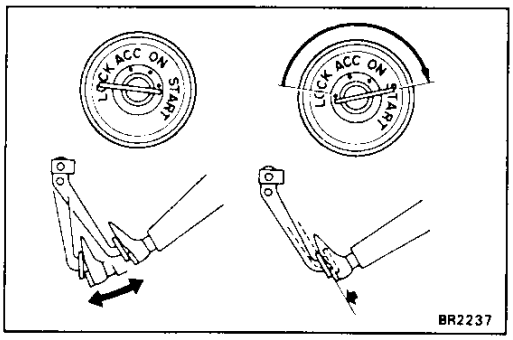

BRAKE BOOSTER OPERATIONAL TEST BR009-06

1. OPERATING CHECK

(a) Depress the brake pedal several times with the engine off and check that there is no change in the pedal reserve distance.

(b) Depress the brake pedal and start the engine. If the pedal goes down slightly, operation is normal.

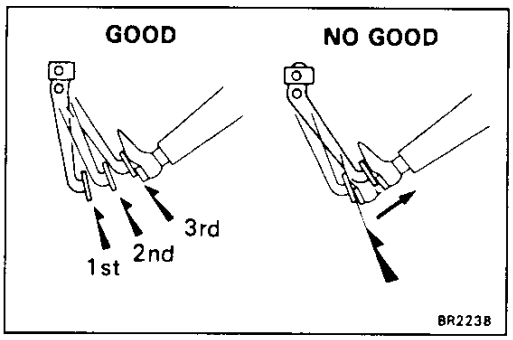

2. AIR TIGHTNESS CHECK

(a) Start the engine and stop it after 1 or 2 minutes. Depress the brake pedal several times slowly. If the pedal goes down farthest the 1st time, but gradually rises after the 2nd or 3rd time, the booster is air tight.

(b) Depress the brake pedal while the engine is running, and stop the engine with the pedal depressed. If there is no change in the pedal reserve travel after holding the pedal for 30 seconds, the booster is air tight.

Downloaded from www.Manualslib.com manuals search engine

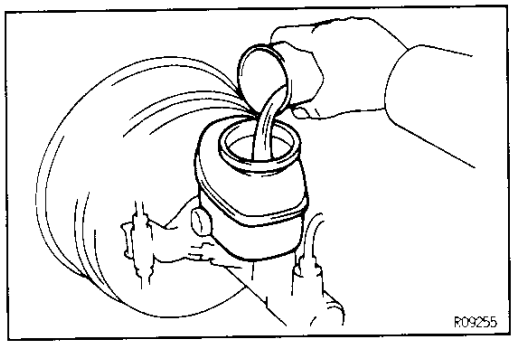

BRAKE SYSTEM BLEEDING

HINT: If any work is done on the brake system or if air in the brake lines is suspected, bleed the system of air.
NOTICE: Do not let brake fluid remain on a painted surface. Wash it off immediately.

1. **FILL BRAKE RESERVOIR WITH BRAKE FLUID**
Fluid: SAEJ1703 or FMVSS No.116 DOT3

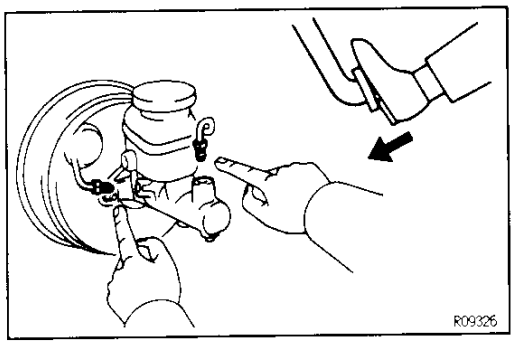

2. **BLEED MASTER CYLINDER**
HINT: If the master cylinder has been disassembled or if the reservoir becomes empty, bleed the air from the master cylinder.
(a) Disconnect the brake lines from the master cylinder.
(b) Slowly depress the brake pedal and hold it.

BR

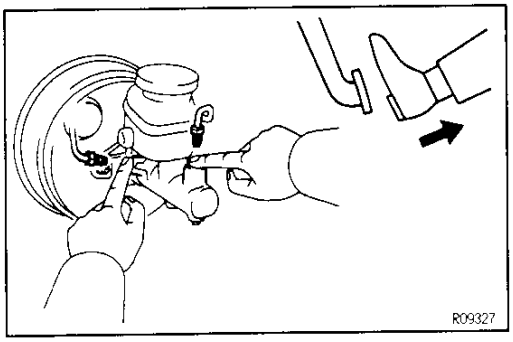

(c) Block off the outlet plug with your finger and release the brake pedal.
(d) Repeat (b) and (c) 3 or 4 times.

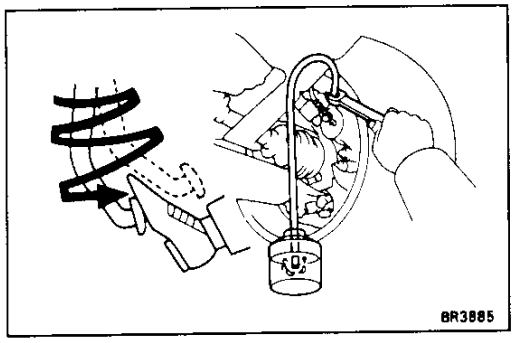

3. **BLEED BRAKE LINE**
(a) Connect the vinyl tube to the caliper.
(b) Depress the brake pedal several times, then loosen the bleeder plug with the pedal held down.
(c) At the point when fluid stops coming out, tighten the bleeder plug, then release the brake pedal.
(d) Repeat (b) and (c) until all the air in the fluid has been bled out.
(e) Repeat the above procedure to bleed the air out of the brake line for each wheel.
HINT: Start bleeding from the caliper the farthest away from the master cylinder and finish at the closest.

4. **CHECK FLUID LEVEL IN RESERVOIR**
Check the fluid level and add fluid if necessary.
Fluid: SAEJ1703 or FMVSS No.116 DOT3

Downloaded from www.Manualslib.com manuals search engine

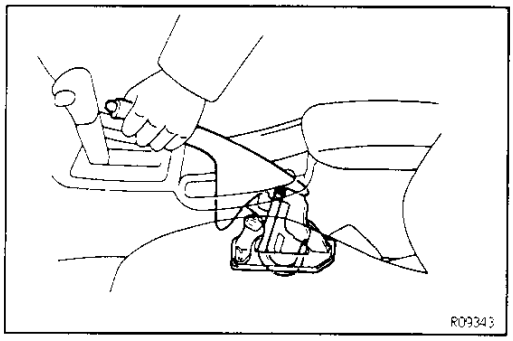

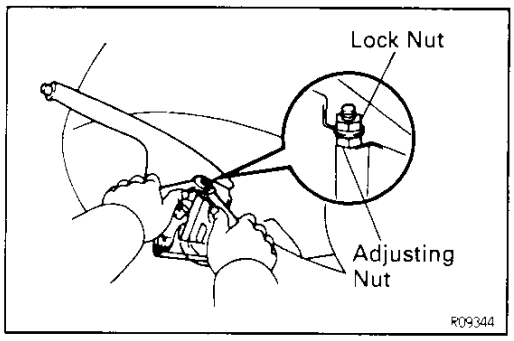

BR

PARKING BRAKE CHECK AND ADJUSTMENT

1. CHECK THAT PARKING BRAKE LEVER TRAVEL IS CORRECT

Pull the parking brake lever all the way up, and count the number of clicks.

Parking brake lever travel at 196 N (20 kgf, 44.1 lbf):
4 – 7 clicks

If incorrect, adjust the parking brake.

2. IF NECESSARY, ADJUST PARKING BRAKE

HINT: Before adjusting the parking brake, make sure that the rear brake shoe clearance has been adjusted. For shoe clearance adjustment, see step 9 on page BR – 66.

(a) Remove the console box.

(b) Loosen the lock nut and turn the adjusting nut until the lever travel is correct.

(c) Tighten the lock nut.
Torque: 5.4 N·m (55 kgf·cm, 48 in.·lbf)

(d) Install the console box.

Downloaded from www.Manualslib.com manuals search engine

MASTER CYLINDER

MASTER CYLINDER REMOVAL

BR0R7-01

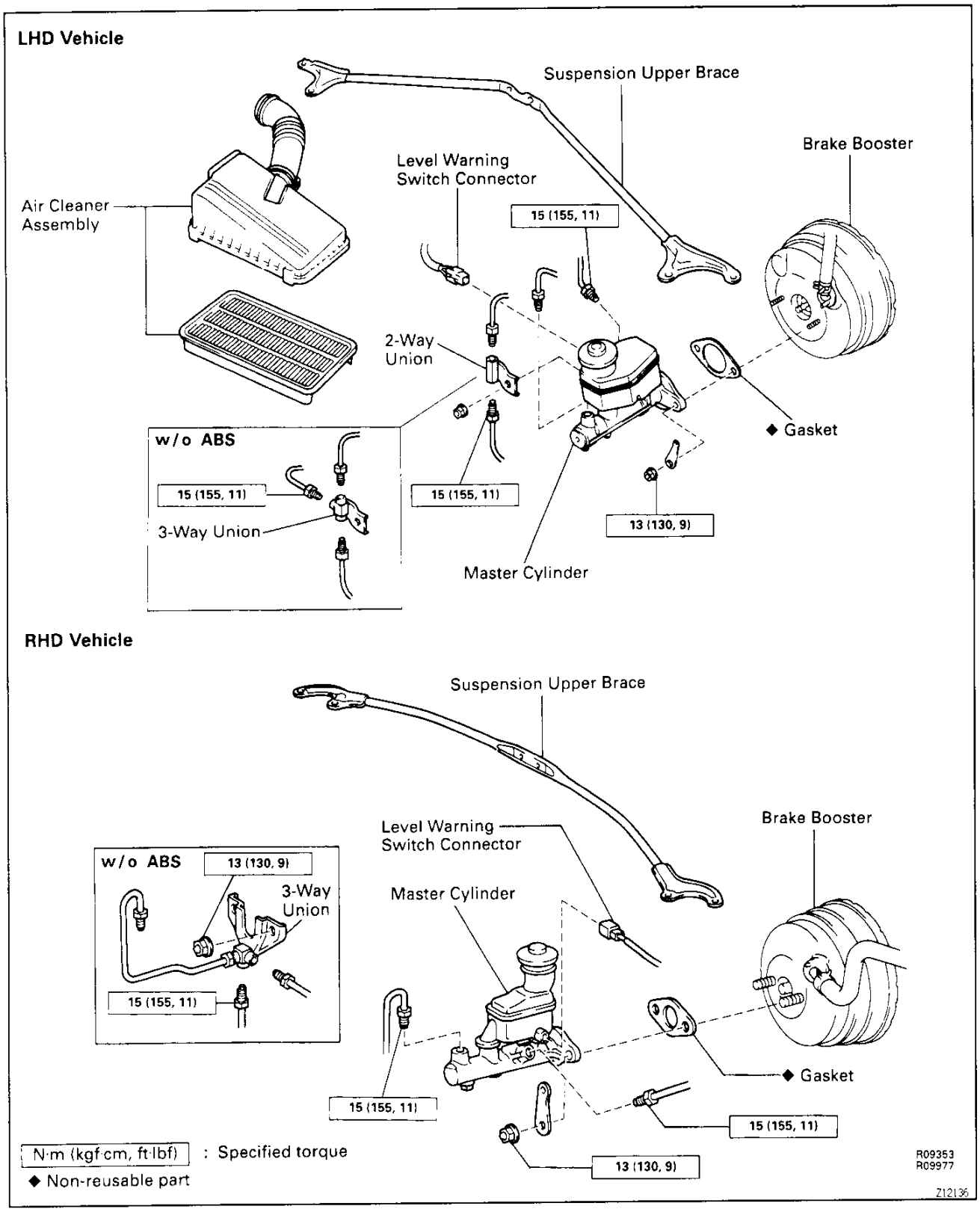

BR

Downloaded from www.Manualslib.com manuals search engine

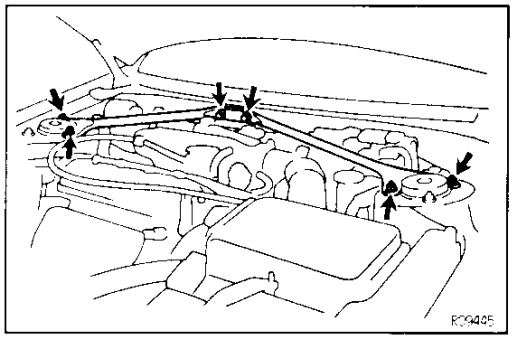

1. **REMOVE SUSPENSION UPPER BRACE**
(a) Remove the 2 bolts, 4 nuts and upper brace.
(b) Temporarily fasten the shock absorber with the 4 nuts.
2. **REMOVE AIR CLEANER ASSEMBLY**

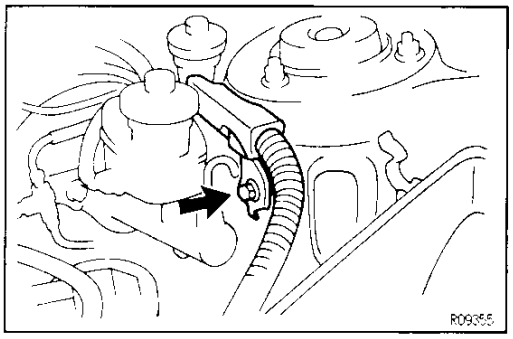

3. **LHD Vehicle (w/o ABS):**
REMOVE WIRE HARNESS CLAMP

BR

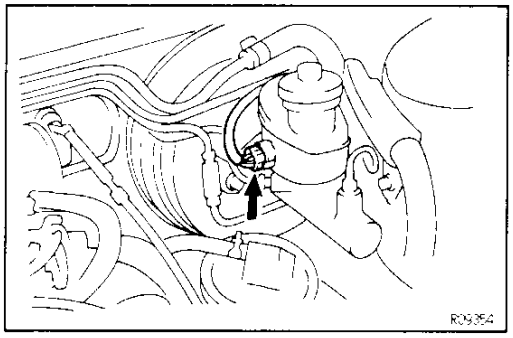

4. **DISCONNECT LEVEL WARNING SWITCH CONNECTOR**
5. **DRAW OUT FLUID WITH SYRINGE**
NOTICE: Do not let brake fluid remain on a painted surface. Wash it off immediately.

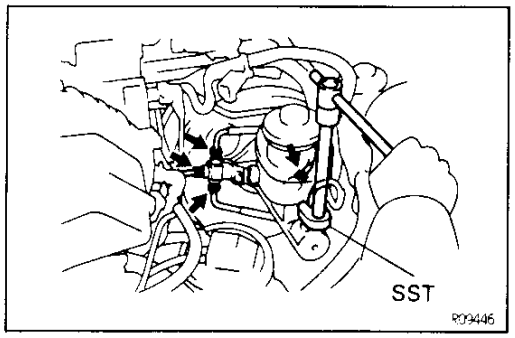

6. **LHD Vehicle:**
DISCONNECT BRAKE LINES
w/o ABS:
Using SST, disconnect the brake lines from the master cylinder and 3—way union.
SST 09023—00100
w/ ABS:
Using SST, disconnect the brake lines from the master cylinder and 2—way union.
SST 09023—00100

Downloaded from www.Manualslib.com manuals search engine

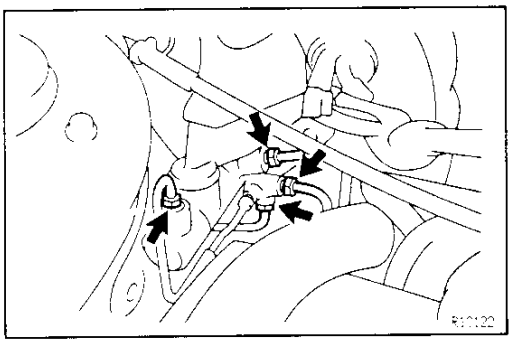

7. **RHD Vehicle:**
DISCONNECT BRAKE LINES
w/o ABS:
Using SST, disconnect the brake lines from the master cylinder and 3—way union.
SST 09023—00100
w/ ABS:
Using SST, disconnect the brake lines from the master cylinder.
SST 09023—00100

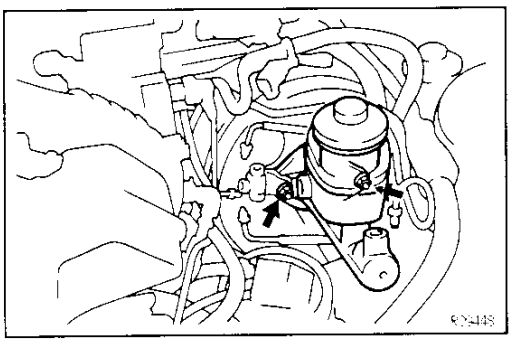

8. **REMOVE MASTER CYLINDER**
Remove the mounting nuts and pull out the master cylinder and gasket.

Downloaded from www.Manualslib.com manuals search engine

BR0R6 – 01

COMPONENTS
(LHD Vehicle)

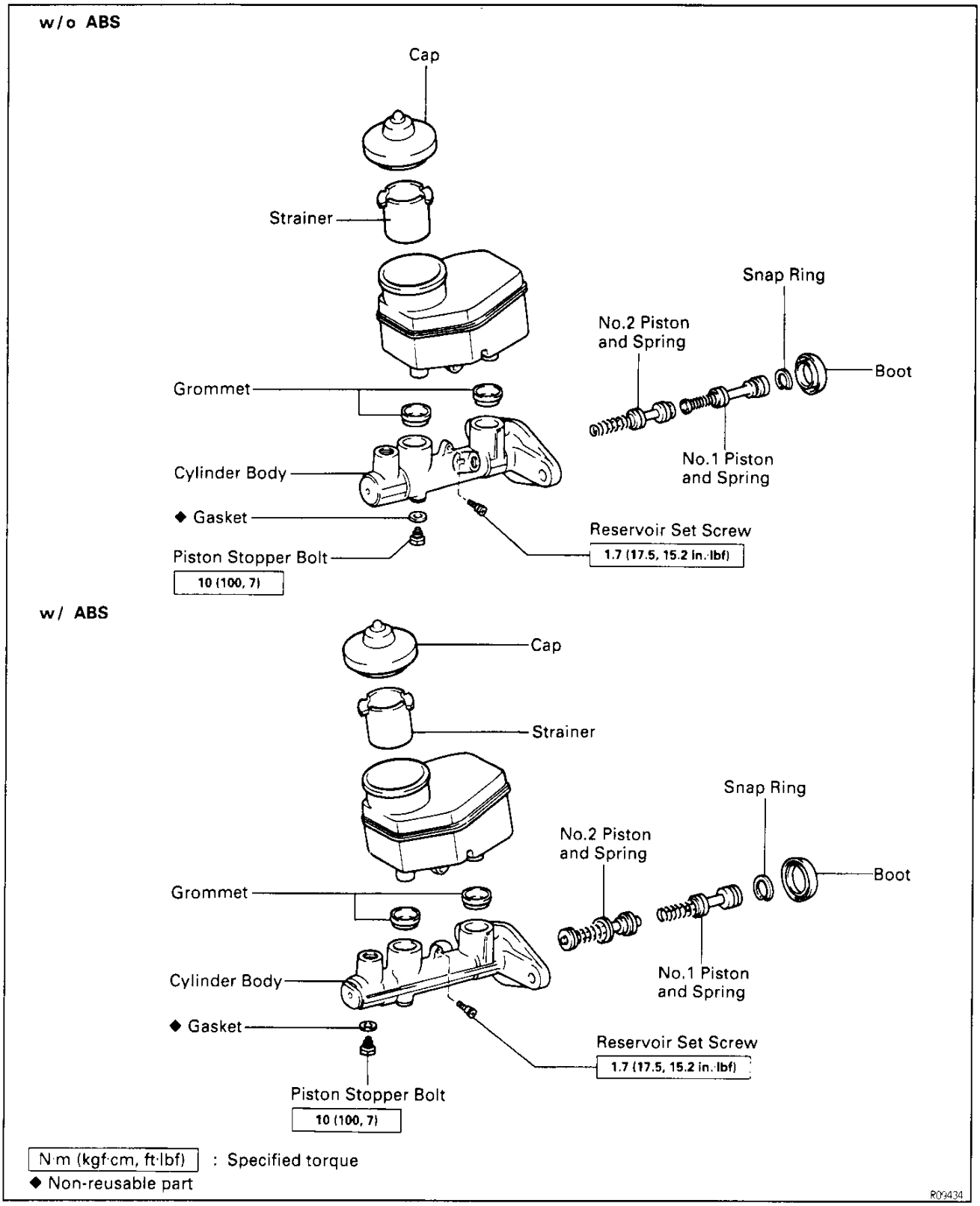

BR

Downloaded from www.Manualslib.com manuals search engine

(RHD Vehicle)

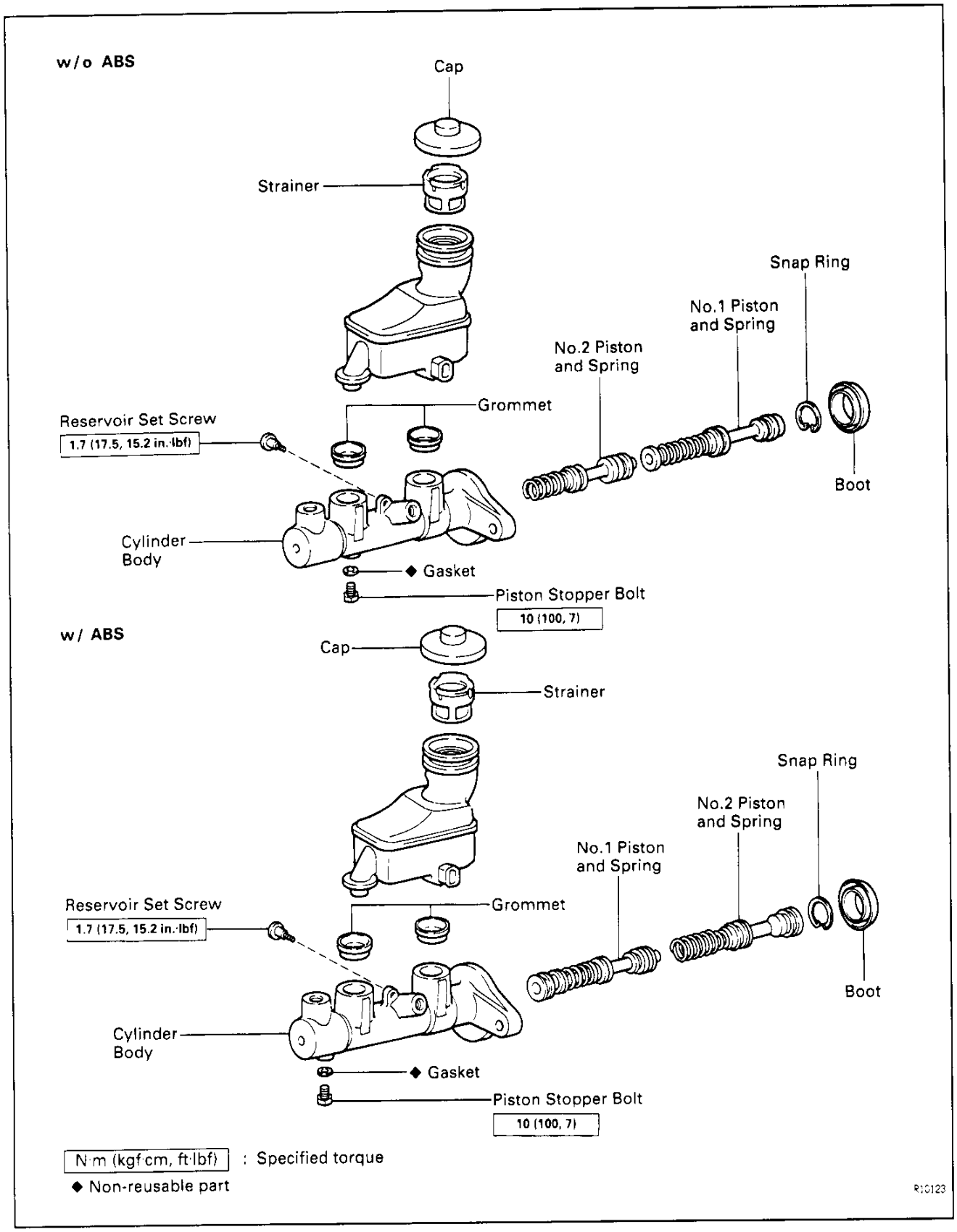

BR

Downloaded from www.Manualslib.com manuals search engine

MASTER CYLINDER DISASSEMBLY

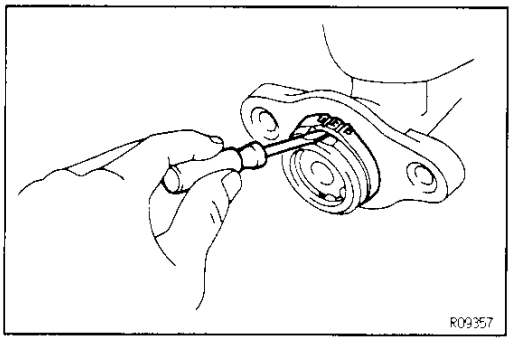

1. REMOVE MASTER CYLINDER BOOT

Using a screwdriver, remove the master cylinder boot.

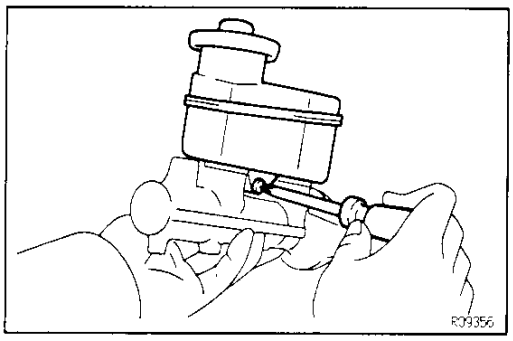

2. REMOVE RESERVOIR

(a) Remove the set screw and pull out the reservoir.

(b) Remove the cap and strainer from the reservoir.

3. REMOVE 2 GROMMETS

4. PLACE CYLINDER IN VISE

BR

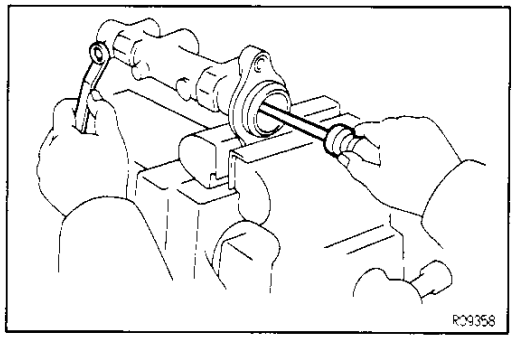

5. REMOVE PISTON STOPPER BOLT

Using a screwdriver, push the pistons in all the way and remove the piston stopper bolt and gasket.

HINT: Tape the screwdriver tip before use.

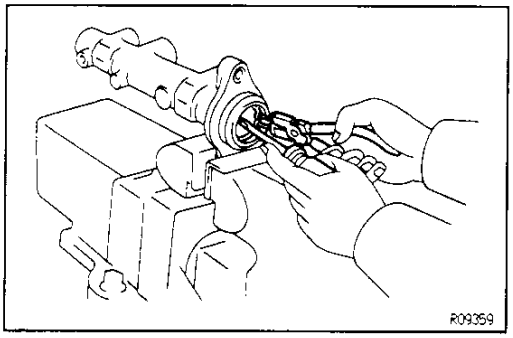

6. REMOVE PISTONS

(a) Push in the piston with a screwdriver and remove the snap ring with snap ring pliers.

(b) Remove the No.1 piston and spring by hand, pulling straight out, not at an angle.

NOTICE: If pulled out at an angle, there is a possibility that the cylinder bore could be damaged.

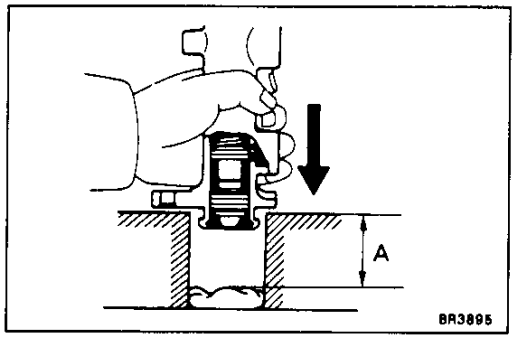

(c) Place a rag and 2 wooden blocks on the work table and lightly tap the cylinder flange against the block edges until the piston drops out of the cylinder.

HINT: Make sure the distance (A) from the rag to the top of the blocks is at least 100 mm (3.94 in.).

Downloaded from www.Manualslib.com manuals search engine

MASTER CYLINDER COMPONENTS INSPECTION

HINT: Clean the disassembled parts with compressed air.

1. **INSPECT CYLINDER BORE FOR RUST OR SCORING**
2. **INSPECT CYLINDER FOR WEAR OR DAMAGE**
   If necessary, clean or replace the cylinder.

MASTER CYLINDER ASSEMBLY

1. **APPLY LITHIUM SOAP BASE GLYCOL GREASE TO RUBBER PARTS INDICATED BY ARROWS**

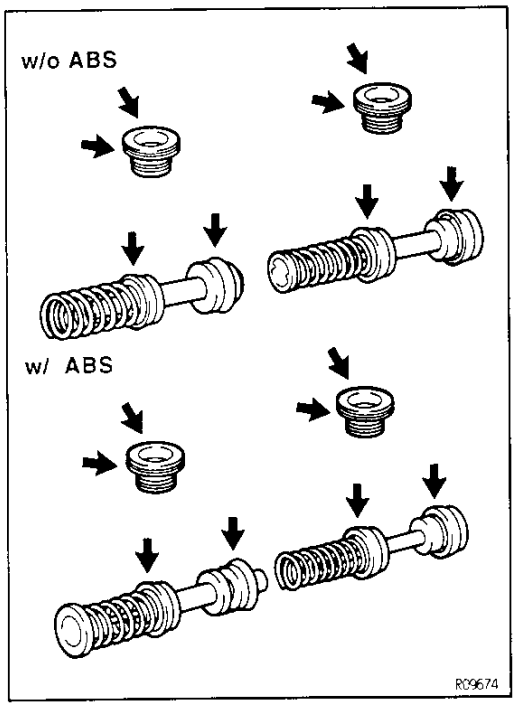

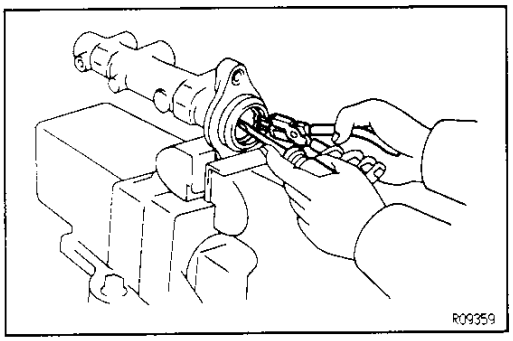

2. **INSTALL PISTONS**
   NOTICE: Be careful not to damage the rubber lips on the pistons.
   (a) Insert the 2 pistons straight in, not at an angle.
   NOTICE: If inserted at an angle, there is a possibility that the cylinder bore could be damaged.
   (b) Push in the piston with a screwdriver and install the snap ring with snap ring pliers.
   HINT: Tape the screwdriver tip before use.

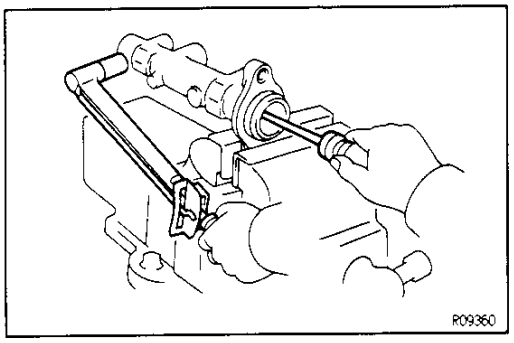

3. **INSTALL PISTON STOPPER BOLT**
   Using a screwdriver, push the piston in all the way and install the piston stopper bolt over a new gasket. Torque the bolt.
   Torque: 10 N·m (100 kgf·cm, 7 ft·lbf)
4. **INSTALL 2 GROMMETS**

Downloaded from www.Manualslib.com manuals search engine

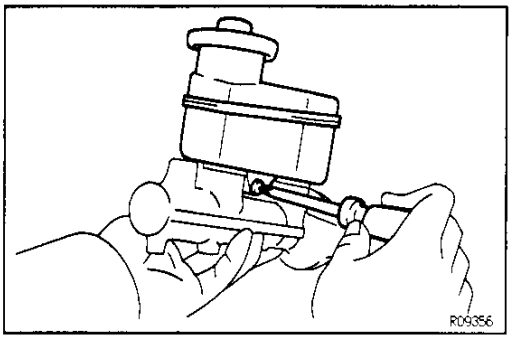

5. INSTALL RESERVOIR

(a) Install the cap and strainer to the reservoir.

(b) Push the reservoir onto the cylinder.

(c) Install the set screw while pushing on the reservoir.
Torque: 1.7 N·m (17.5 kgf·cm, 15.2 in.·lbf)

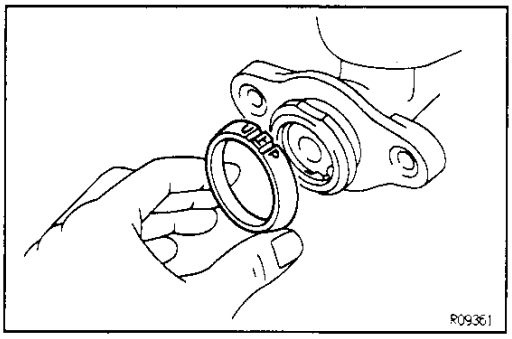

6. INSTALL MASTER CYLINDER BOOT

Align the grooves on the master cylinder boot and master cylinder flange as shown, install the cylinder boot on the master cylinder.

BR

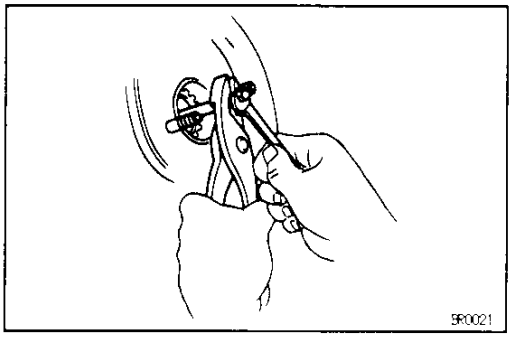

MASTER CYLINDER INSTALLATION

1. ADJUST LENGTH OF BRAKE BOOSTER PUSH ROD BEFORE INSTALLING MASTER CYLINDER
(See page BR–25)

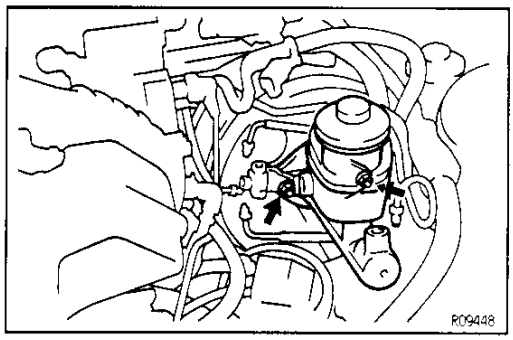

2. INSTALL MASTER CYLINDER

Install the master cylinder and a new gasket on the brake booster with 2 nuts.
Torque: 13 N·m (130 kgf·cm, 9 ft·lbf)

Downloaded from www.Manualslib.com manuals search engine

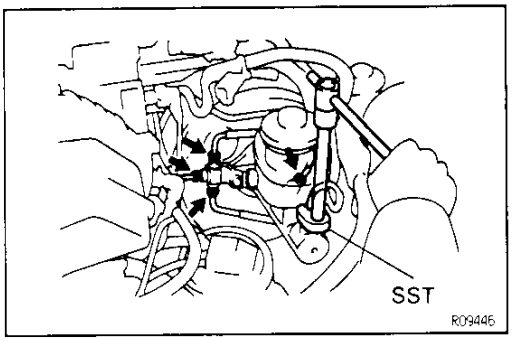

3. **LHD Vehicle:**
CONNECT BRAKE LINES
w/o ABS:
Using SST, connect the brake lines to the master cylinder and 3—way union. Torque the union nuts.
SST 09023—00100
Torque: 15 N·m (155 kgf·cm, 11 ft·lbf)
w/ ABS:
Using SST, connect the brake lines to the master cylinder and 2—way union. Torque the union nuts.
SST 09023—00100
Torque: 15 N·m (155 kgf·cm, 11 ft·lbf)

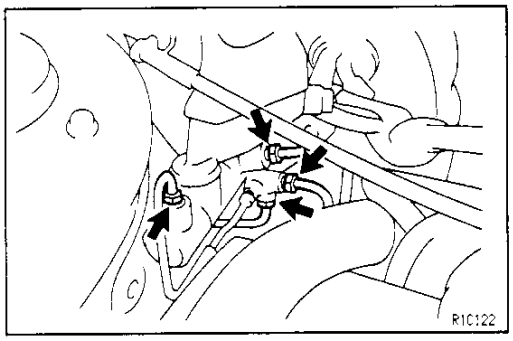

4. **RHD Vehicle:**
CONNECT BRAKE LINES
w/o ABS:
Using SST, connect the brake lines to the master cylinder and 3—way union. Torque the union nuts.
SST 09023—00100
Torque: 15 N·m (155 kgf·cm, 11 ft·lbf)
w/ ABS:
Using SST, connect the brake lines to the master cylinder. Torque the union nuts.
SST 09023—00100
Torque: 15 N·m (155 kgf·cm, 11 ft·lbf)

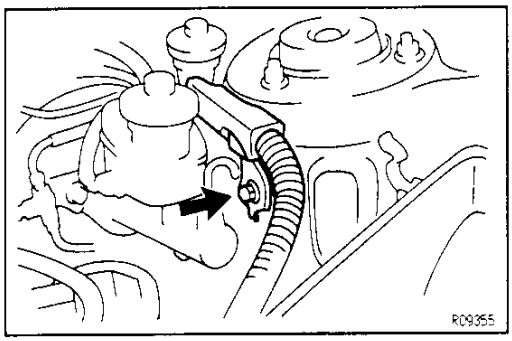

5. **LHD Vehicle:**
CONNECT WIRE HARNESS CLAMP

Downloaded from www.Manualslib.com manuals search engine

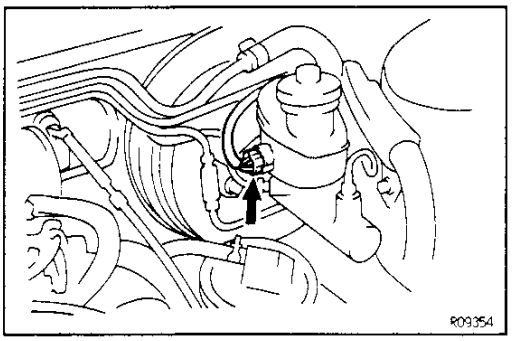

6. CONNECT LEVEL WARNING SWITCH CONNECTOR

7. INSTALL AIR CLEANER ASSEMBLY
8. FILL BRAKE RESERVOIR WITH BRAKE FLUID AND BLEED BRAKE SYSTEM
   (See page BR–9)
9. CHECK FOR LEAKS
10. CHECK AND ADJUST BRAKE PEDAL
    (See page BR–7)

Downloaded from www.Manualslib.com manuals search engine

BRAKE BOOSTER

BRAKE BOOSTER REMOVAL

(LHD Vehicle)

BR0RA-02

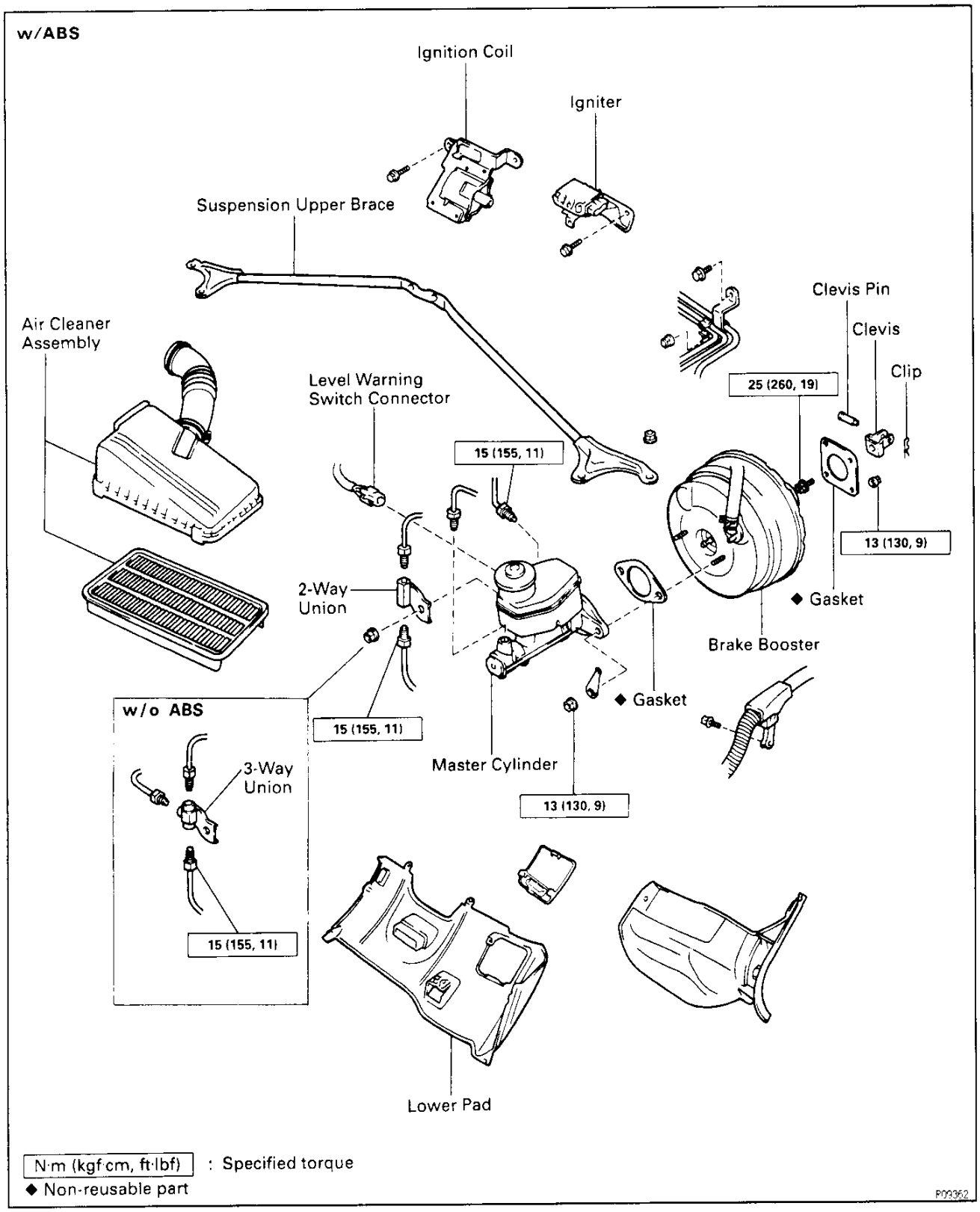

BR

Downloaded from www.Manualslib.com manuals search engine

(RHD Vehicle)

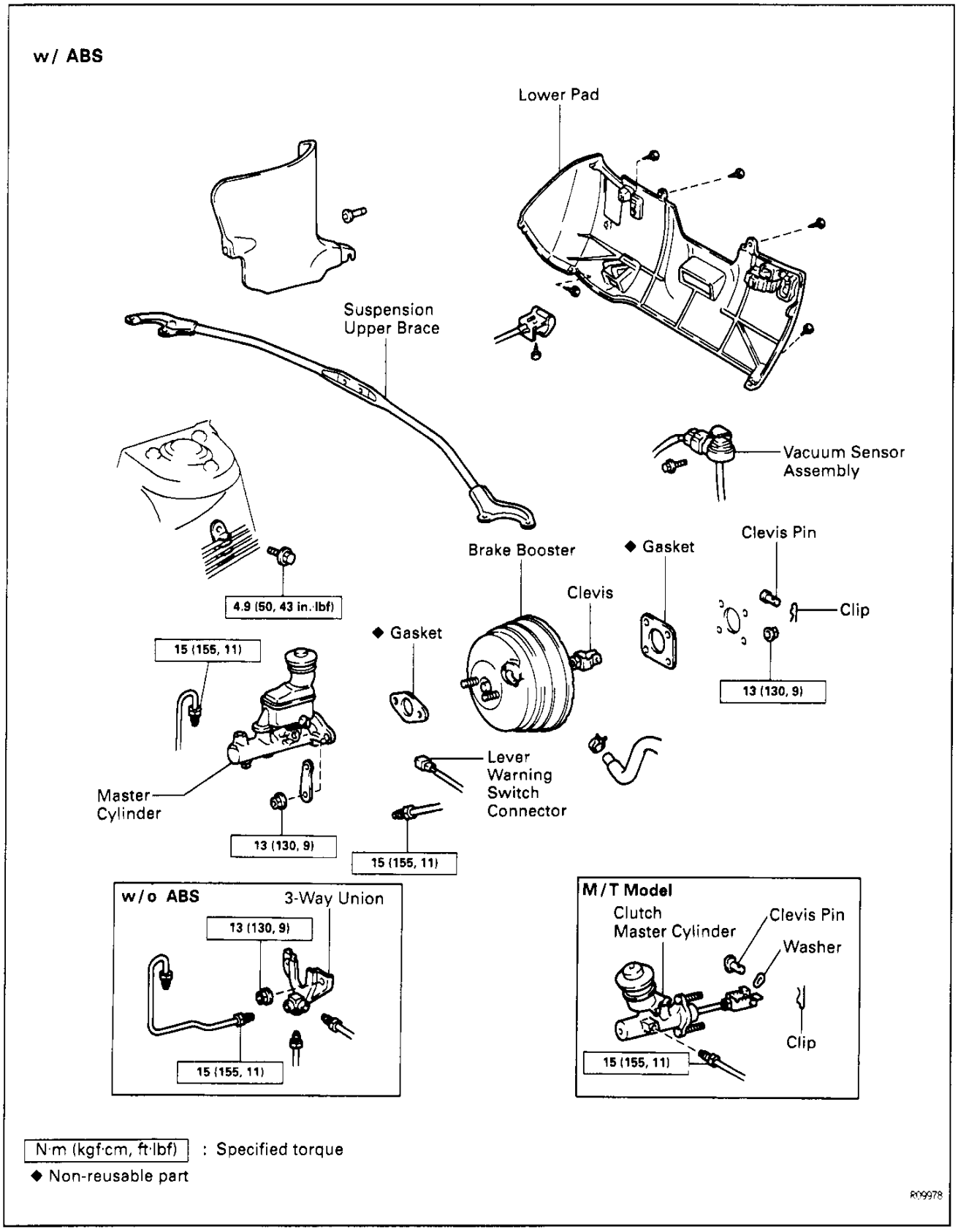

Downloaded from www.Manualslib.com manuals search engine

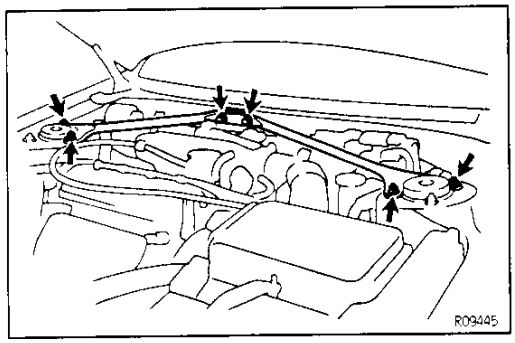

1. **REMOVE SUSPENSION UPPER BRACE**
(a) Remove the 2 bolts, 4 nuts and upper brace.
(b) Temporarily fasten the shock absorber with the 4 nuts.

2. **REMOVE LH FRONT WHEEL**
3. **LHD Vehicle:**
REMOVE IGNITION COIL AND IGNITER
4. **RHD Vehicle:**
REMOVE VACUUM SENSOR ASSEMBLY
5. **REMOVE MASTER CYLINDER**
(See page BR−11)
6. **DISCONNECT VACUUM HOSE FROM BRAKE BOOSTER**
7. **REMOVE LOWER PAD**
8. **REMOVE PEDAL RETURN SPRING**
9. **REMOVE CLIP AND CLEVIS PIN**

BR

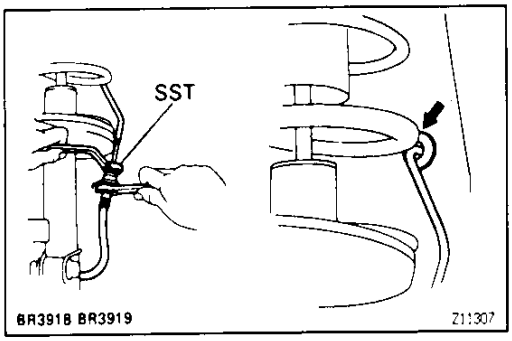

10. **REMOVE BRAKE LINE**
LHD Vehicle:
(a) Using SST and spanner, disconnect the brake tube from the flexible hose of LH front brake.
SST 09751−36011
(b) Remove the brake tube grommet from the body.

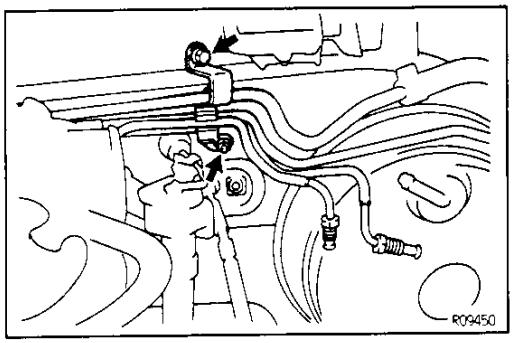

(c) Remove the 3 brake tubes, as shown in the illustration from the No.1 brake tube clamp.

Downloaded from www.Manualslib.com manuals search engine

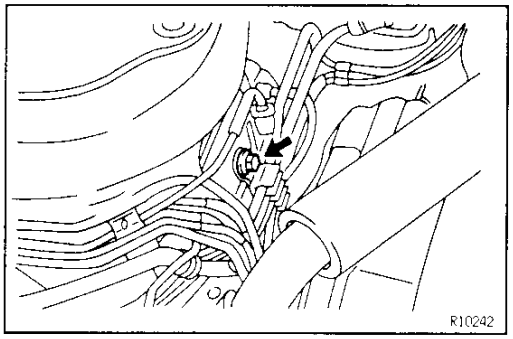

RHD Vehicle:

Remove the bolt from the body.

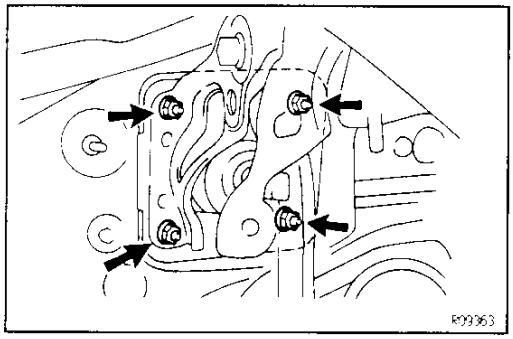

11. REMOVE BRAKE BOOSTER

(a) Remove the 4 nuts.

(b) Pull out the brake booster and gasket.

BR

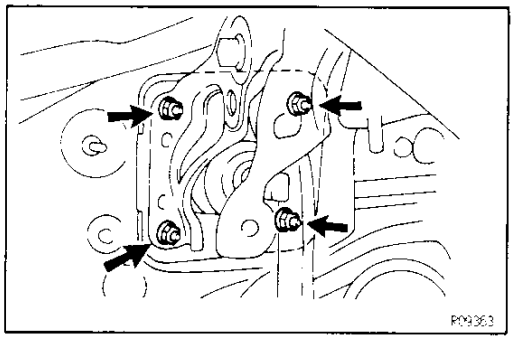

BRAKE BOOSTER INSTALLATION

BR0R8 - 02

1. INSTALL BRAKE BOOSTER

(a) Install booster and a new gasket.

(b) Connect the 2 hoses.

(c) Install the clevis to the operating rod.

(d) Install and torque the booster installation nuts.
Torque: 13 N·m (130 kgf·cm, 9 ft·lbf)

(e) Insert the clevis pin into the clevis and brake pedal, and install the clip to the clevis pin.

(f) Install the pedal return spring.

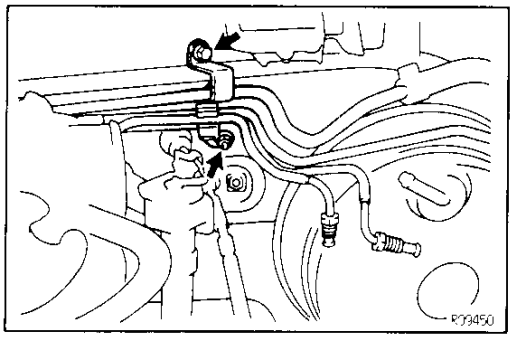

2. INSTALL BRAKE LINE

LHD Vehicle:

(a) Install the 3 brake tubes to the No.1 brake tube clamp.
Torque: 5.0 N·m (50 kgf·cm, 43 in.·lbf)

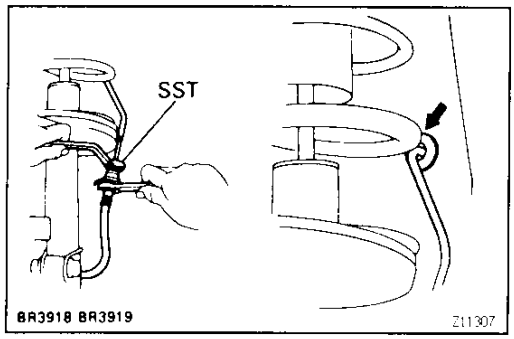

(b) Using SST and spanner, connect the brake tube to the flexible hose of LH front brake.
SST 09751—36011
Torque: 15 N·m (155 kgf·cm, 11 ft·lbf)

(c) Install the brake tube grommet to the body.

Downloaded from www.Manualslib.com manuals search engine

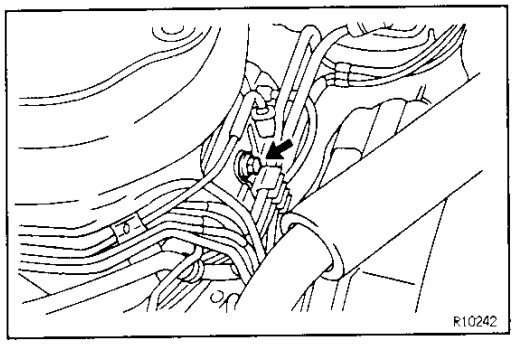

3. INSTALL BRAKE LINE

RHD Vehicle:

Install the bolt to the body.

Torque: 5.0 N·m (50 kgf·cm, 43 in.·lbf)

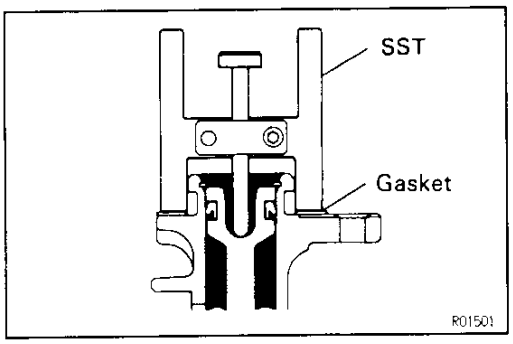

4. ADJUST LENGTH OF BOOSTER PUSH ROD

(a) Install the gasket on the master cylinder.

(b) Set the SST on the gasket, and lower the pin until its tip slightly touches the piston.
SST 09737–00010

BR

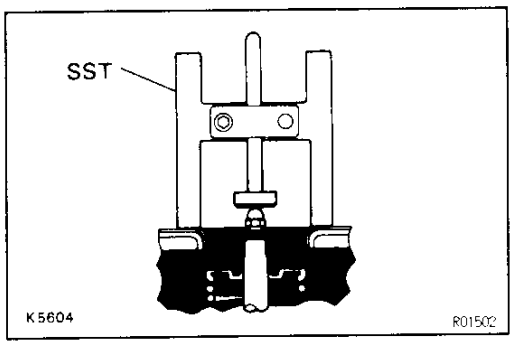

(c) Turn the SST upside down, and set it on the booster.
SST 09737–00010

(d) Measure the clearance between the booster push rod and pin head (SST).

Clearance:

0 mm (0 in.)

(e) Adjust the booster push rod length until the push rod slightly touches the pin head.
HINT: When adjusting the push rod, depress the brake pedal enough so that the push rod sticks out.

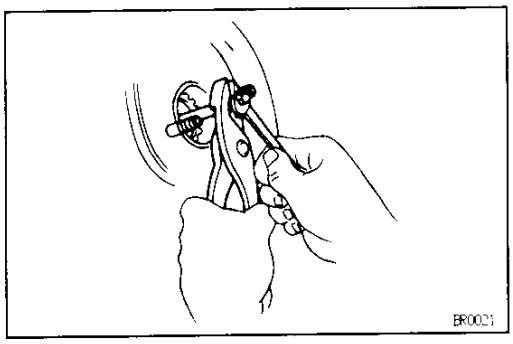

Downloaded from www.Manualslib.com manuals search engine

5. **LHD Vehicle:**
   INSTALL IGNITION COIL AND IGNITER
6. **RHD Vehicle:**
   INSTALL VACUUM SENSOR ASSEMBLY
7. **INSTALL MASTER CYLINDER**
   (See page BR—11)
8. **CONNECT VACUUM HOSE TO BRAKE BOOSTER**
9. **FILL BRAKE RESERVOIR WITH BRAKE FLUID AND BLEED BRAKE SYSTEM**
   (See page BR—9)
10. **CHECK FOR LEAKS**
11. **CHECK AND ADJUST BRAKE PEDAL**
    (See page BR—7)
    Check and adjust the brake pedal, then tighten the clevis lock nut.
    Torque: 25 N·m (260 kgf·cm, 19 ft·lbf)
12. **PERFORM OPERATIONAL CHECK**
    (See page BR—8)

Downloaded from www.Manualslib.com manuals search engine

FRONT BRAKE (7A—FE, 3S—FE) COMPONENTS

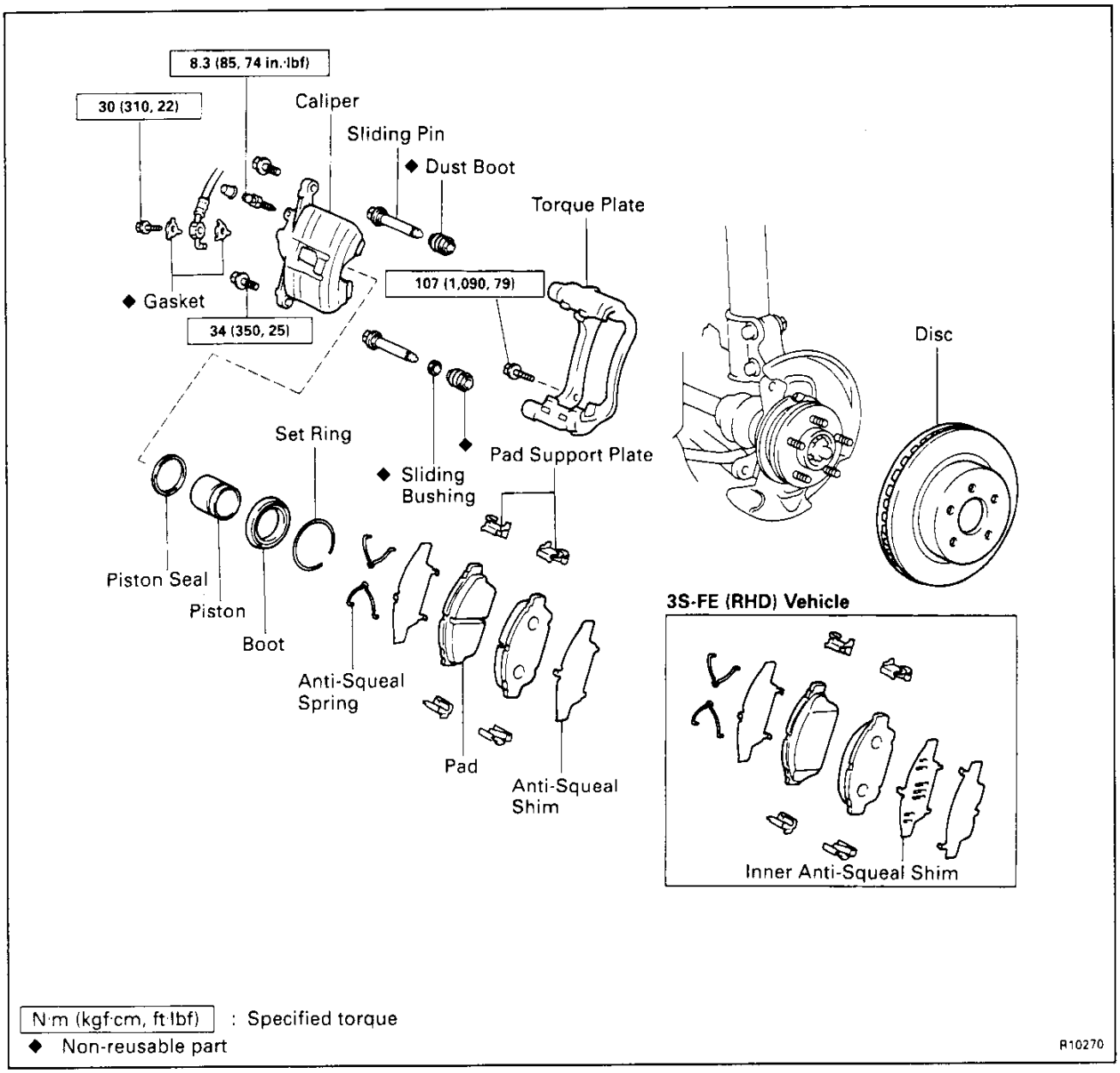

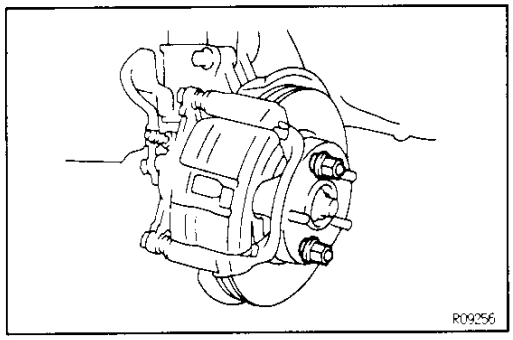

BRAKE PADS REPLACEMENT

1. **REMOVE FRONT WHEEL**
   Remove the wheel and temporarily fasten the disc with the hub nuts.

Downloaded from www.Manualslib.com manuals search engine

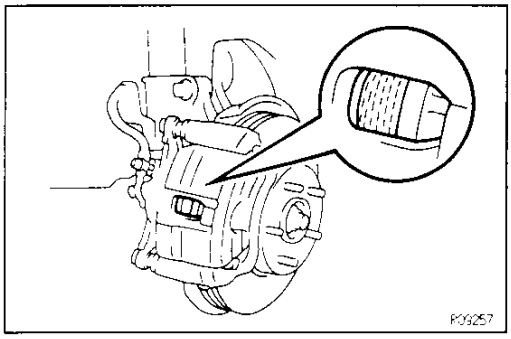

2. INSPECT PAD LINING THICKNESS

Check the pad thickness through the caliper inspection hole and replace the pads if it is not within the specification.

Minimum thickness:

1.0 mm (0.039 in.)

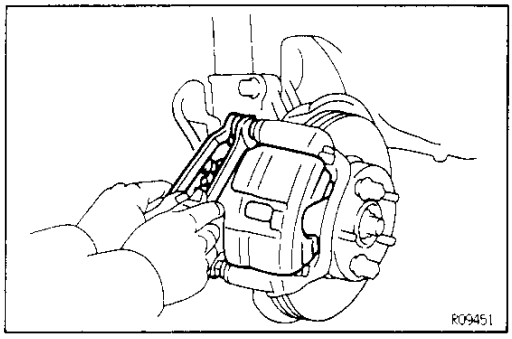

3. LIFT UP CALIPER

(a) Hold the sliding pin on the bottom and loosen the installation bolt.

(b) Remove the installation bolt.

BR

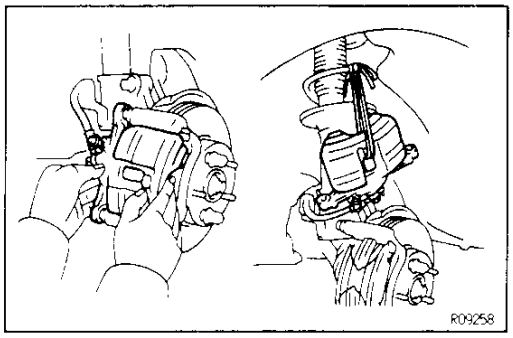

(c) Lift up and securely suspend the caliper.
HINT: Do not disconnect the flexible hose from the brake caliper.

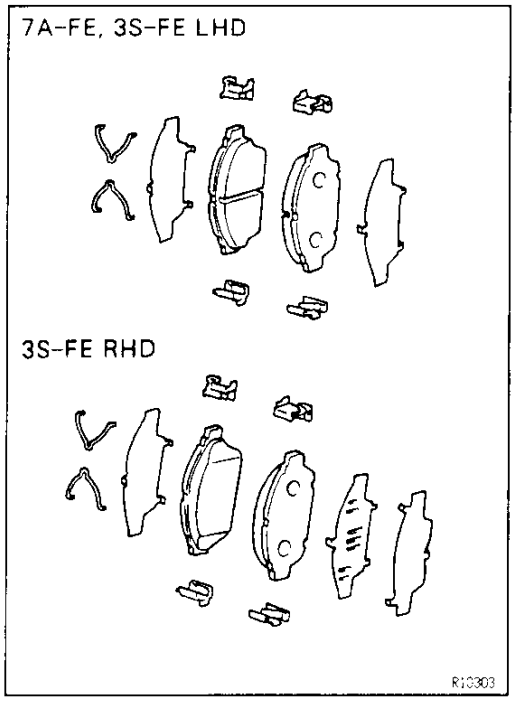

4. REMOVE FOLLOWING PARTS:

7A—FE, 3S—FE LHD:

(a) 2 anti—squeal springs
(b) 2 brake pads
(c) 2 anti—squeal shims
(d) 4 pad support plates

3S—FE RHD:

(a) 2 anti—squeal springs
(b) 2 brake pads
(c) 3 anti—squeal shims
(d) 4 pad support plates

5. CHECK DISC THICKNESS AND RUNOUT

(See page BR—32)

Downloaded from www.Manualslib.com manuals search engine

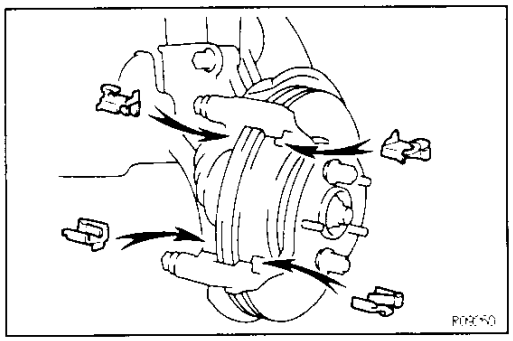

6. INSTALL PAD SUPPORT PLATES

Install the 4 pad support plates.

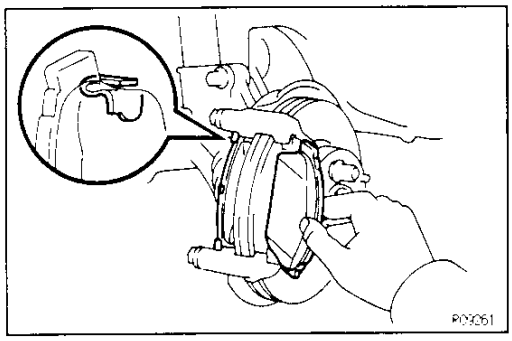

7. INSTALL NEW PADS

HINT: If a brake pad needs replacing, the front brake pads must be replaced as a set.

(a) Apply disc brake grease to both sides of the inner anti—squeal shim.

(b) Install the anti—squeal shims on each pad.

(c) Install inside pad with the pad wear indicator plate facing downward.

(d) Install outside pad.

NOTICE: There should be no oil or grease adhering to the friction surfaces of the pads or the disc.

(e) Install the 2 anti—squeal springs to the pads.

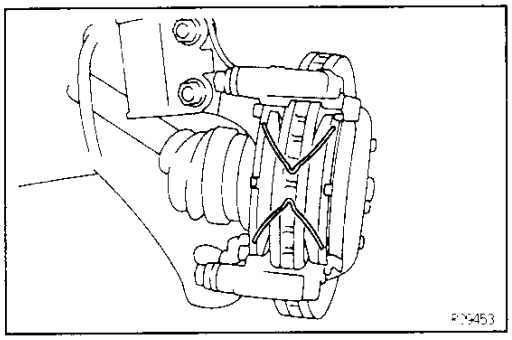

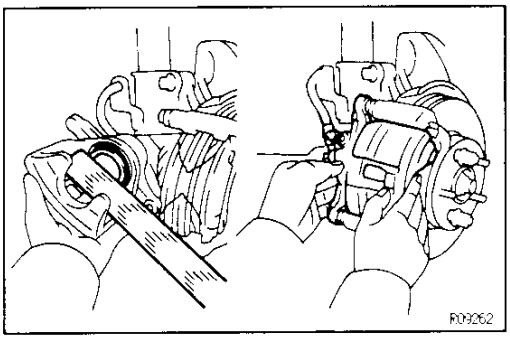

8. INSTALL CALIPER

(a) Draw out a small amount of brake fluid from the reservoir.

(b) Press in the piston with a hammer handle or an equivalent.

HINT: If the piston is difficult to push in, loosen the bleeder plug and push in the piston while letting some brake fluid escape.

(c) Install the caliper.

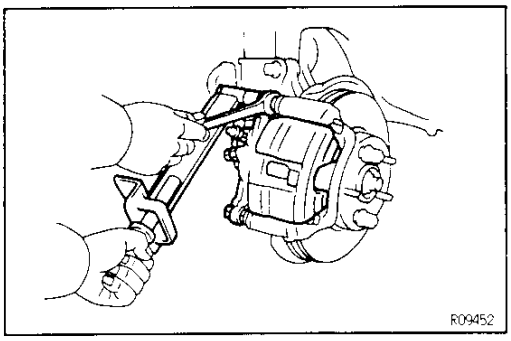

(d) Hold the sliding pin and torque the installation bolt.

Torque: 34 N·m (350 kgf·cm, 25 ft·lbf)

9. INSTALL FRONT WHEEL

10. CHECK THAT FLUID LEVEL IS AT MAX LINE

Downloaded from www.Manualslib.com manuals search engine

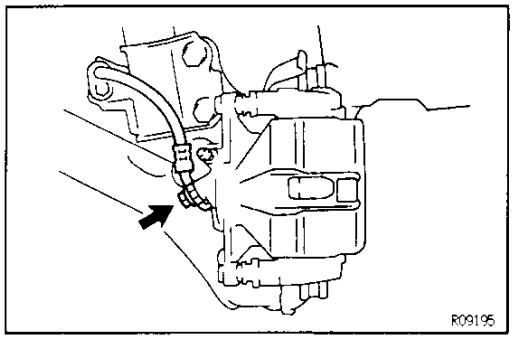

CALIPER REMOVAL

1. DISCONNECT FLEXIBLE HOSE

(a) Remove the union bolt and 2 gaskets from the brake caliper, then disconnect the flexible hose from the caliper.

(b) Use a container to catch the brake fluid as it drains out.

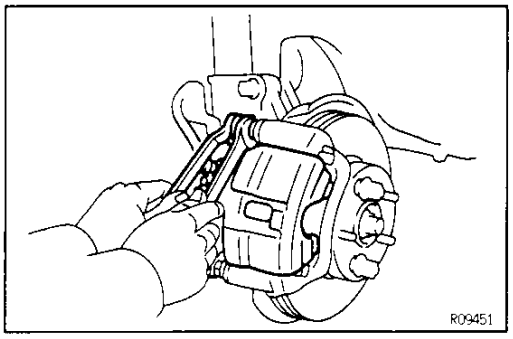

2. REMOVE CALIPER

(a) Hold the sliding pin and loosen the 2 installation bolts.

(b) Remove the 2 installation bolts.

(c) Remove the caliper from the torque plate.

BR

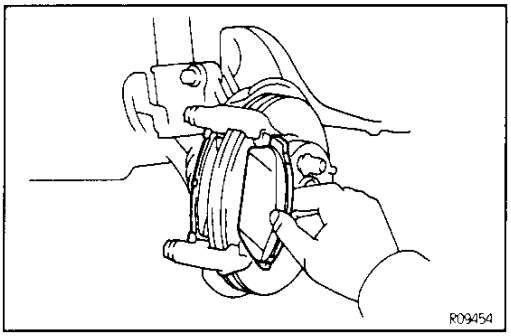

3. REMOVE 2 BRAKE PADS

Remove the inside and outside pads.

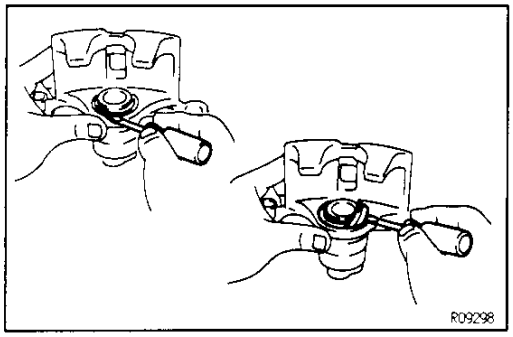

CALIPER DISASSEMBLY

1. REMOVE CYLINDER BOOT SET RING AND CYLINDER BOOT

Using a screwdriver, remove the cylinder boot set ring and cylinder boot from the caliper.

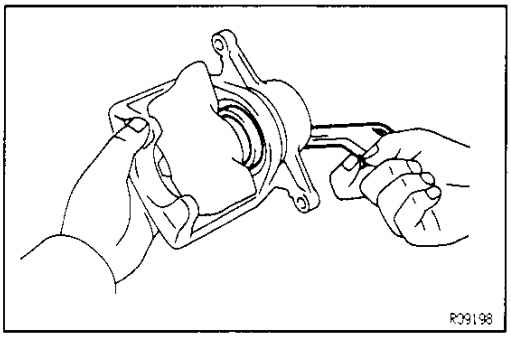

2. REMOVE PISTON

(a) Place a piece of cloth or similar article between the piston and the caliper.

(b) Use compressed air to remove the piston from the cylinder.

CAUTION: Do not place your fingers in front of the piston when using compressed air.

Downloaded from www.Manualslib.com manuals search engine

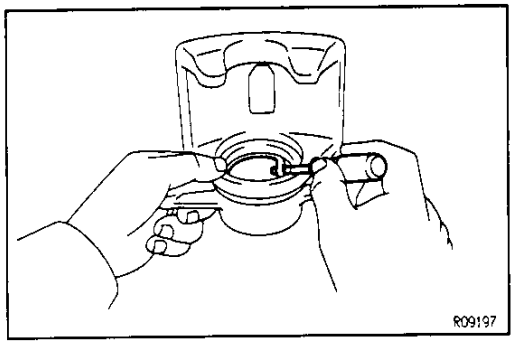

3. REMOVE PISTON SEAL

Using a screwdriver, remove the piston seal from the cylinder.

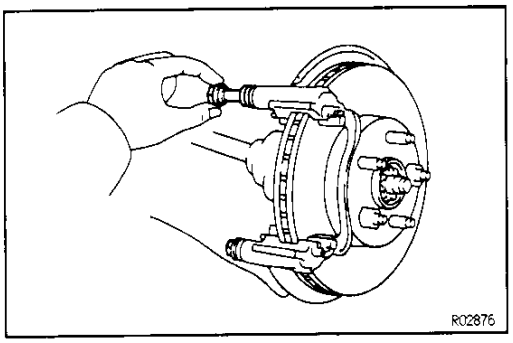

4. REMOVE SLIDING PINS AND DUST BOOTS

(a) Remove the 2 sliding pins from the torque plate.

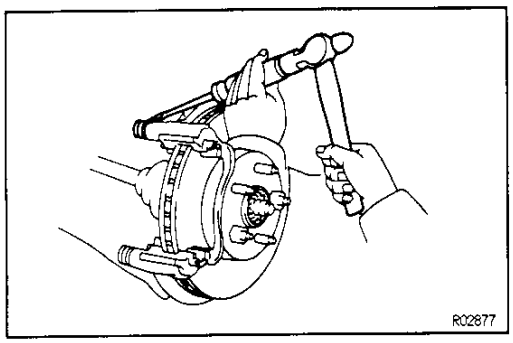

(b) Using a screwdriver and hammer, tap out the 2 dust boots.

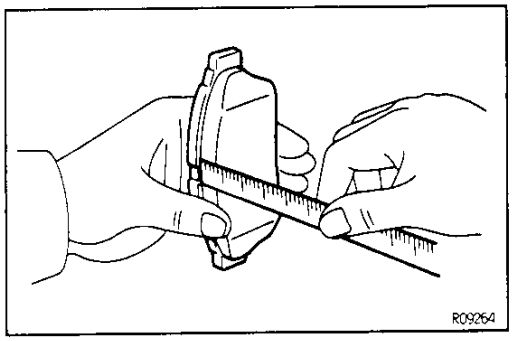

BR08V-04

FRONT BRAKE COMPONENTS INSPECTION AND REPAIR

1. MEASURE PAD LINING THICKNESS

Using a ruler, measure the pad lining thickness.

Standard thickness:

12.0 mm (0.472 in.)

Minimum thickness:

1.0 mm (0.039 in.)

Replace the pads as a set if a pad's thickness is at the minimum thickness or less, or if the pad has severe uneven wear.

Downloaded from www.Manualslib.com manuals search engine

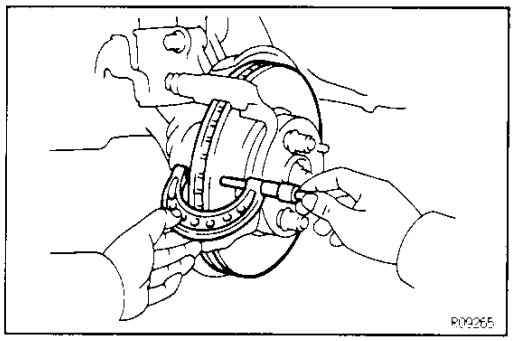

2. MEASURE DISC THICKNESS

Using a micrometer, measure the disc thickness.

Standard thickness:

25.0 mm (0.984 in.)

Minimum thickness:

23.0 mm (0.906 in.)

Replace the disc if the thickness of the disc is at the minimum thickness or less. Replace the disc or grind it on a lathe if it is scored or is worn unevenly.

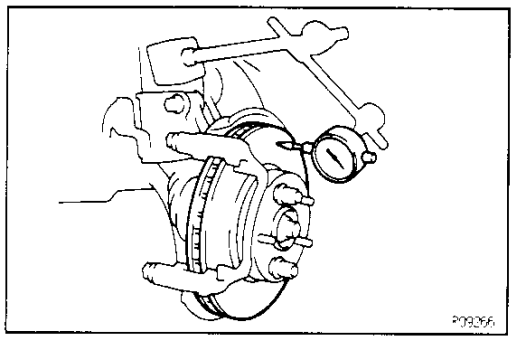

BR

3. MEASURE DISC RUNOUT

Measure disc runout 10 mm (0.39 in.) from the outer edge of the disc.

Maximum disc runout:

0.05 mm (0.0020 in.)

If runout greater than maximum, attempt to adjust to below this maximum figure.

HINT: Before measuring the runout, confirm that the front bearing play is within specification.

4. IF NECESSARY, ADJUST DISC RUNOUT

(a) Remove the torque plate from the knuckle.

(b) Remove the 5 hub nuts and the disc. Reinstall the disc 1/5 of a turn round from its original position on the hub. Install and torque the 5 hub nuts.

Torque: 103 N·m (1,050 kgf·cm, 76 ft·lbf)

Remeasure the disc runout. Make a note of the runout and the disc's position on the hub.

(c) Repeat (b) until the disc has been installed on the 3 remaining hub position.

(d) If the minimum runout recorded in (b) and (c) is less than 0.05 mm (0.0020 in.), install the disc in that position.

(e) If the minimum runout recorded in (b) and (c) is greater than 0.05 mm (0.0020 in.), replace the disc and repeat step 3.

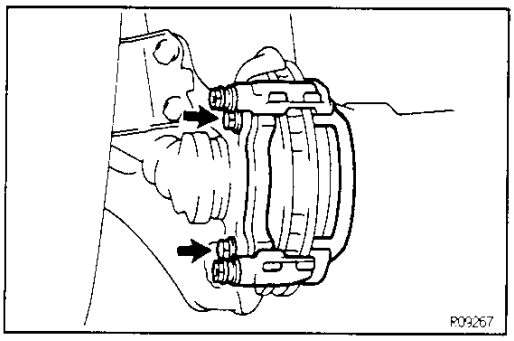

(f) Install the torque plate and torque the mounting bolts.

Torque: 107 N·m (1,090 kgf·cm, 79 ft·lbf)

Downloaded from www.Manualslib.com manuals search engine

BR08W-02

CALIPER ASSEMBLY

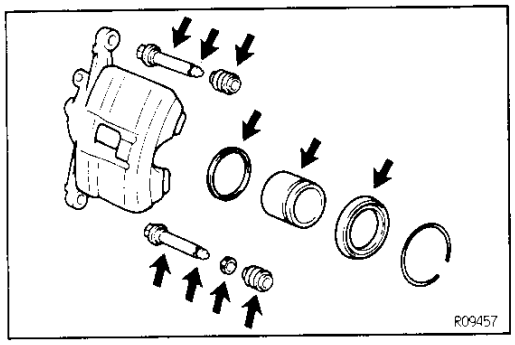

1. **APPLY LITHIUM SOAP BASE GLYCOL GREASE TO PARTS INDICATED WITH ARROWS**

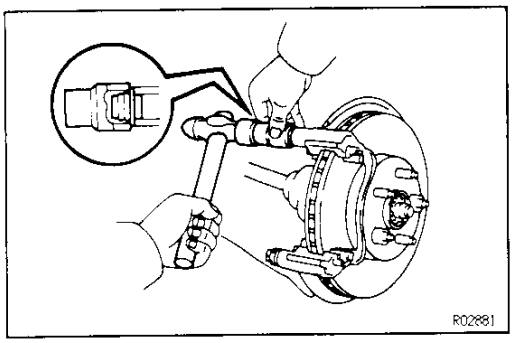

2. **INSTALL DUST BOOTS AND SLIDING PINS**

(a) Using a 19 mm socket wrench and hammer, tap in 2 new dust boots into the torque plate.

(b) Confirm that the metal plate portion of the dust boot fits snugly in the torque plate.

BR

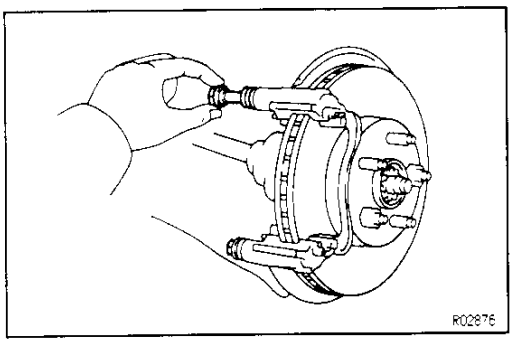

(c) Insert the 2 sliding pins into the torque plate.
NOTICE: Insert the sliding pin with the sliding bushing into the bottom side.

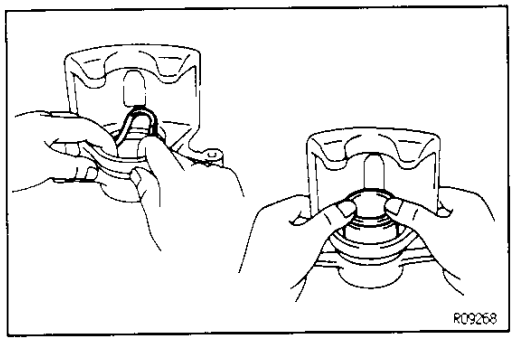

3. **INSTALL PISTON SEAL AND PISTON IN CYLINDER**

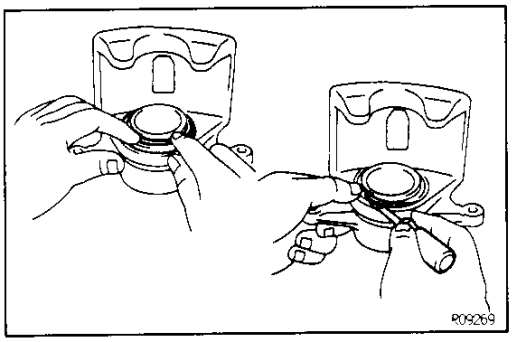

4. **INSTALL CYLINDER BOOT AND CYLINDER BOOT SET RING**

Downloaded from www.Manualslib.com manuals search engine

BR0EX—02

CALIPER INSTALLATION

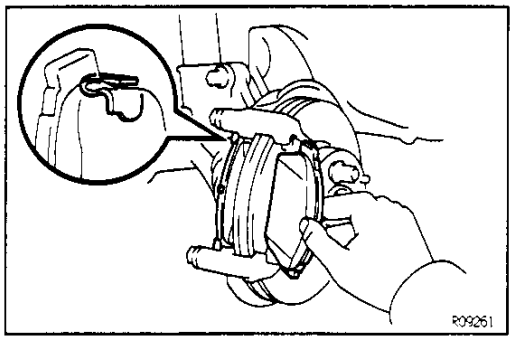

1. INSTALL 2 BRAKE PADS

Install the inside and outside pads.

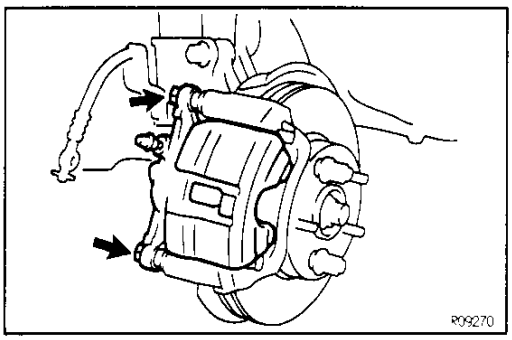

2. INSTALL CALIPER

(a) Temporarily install the caliper on the torque plate with the 2 installation bolts.

(b) Hold the sliding pin and torque the installation bolt.
Torque: 34 N·m (350 kgf·cm, 25 ft·lbf)

BR

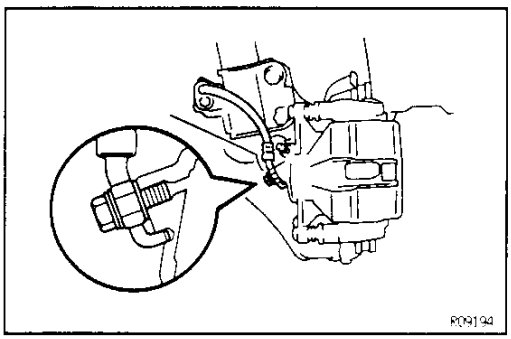

3. CONNECT FLEXIBLE HOSE

Install the flexible hose on the brake caliper with 2 new gaskets.
Torque: 30 N·m (310 kgf·cm, 22 ft·lbf)

4. FILL BRAKE RESERVOIR WITH BRAKE FLUID AND BLEED BRAKE SYSTEM

(See page BR—9)

5. CHECK FOR LEAKS

Downloaded from www.Manualslib.com manuals search engine

FRONT BRAKE (5S—FE, 3S—GE w/o Super Strut Type)

COMPONENTS

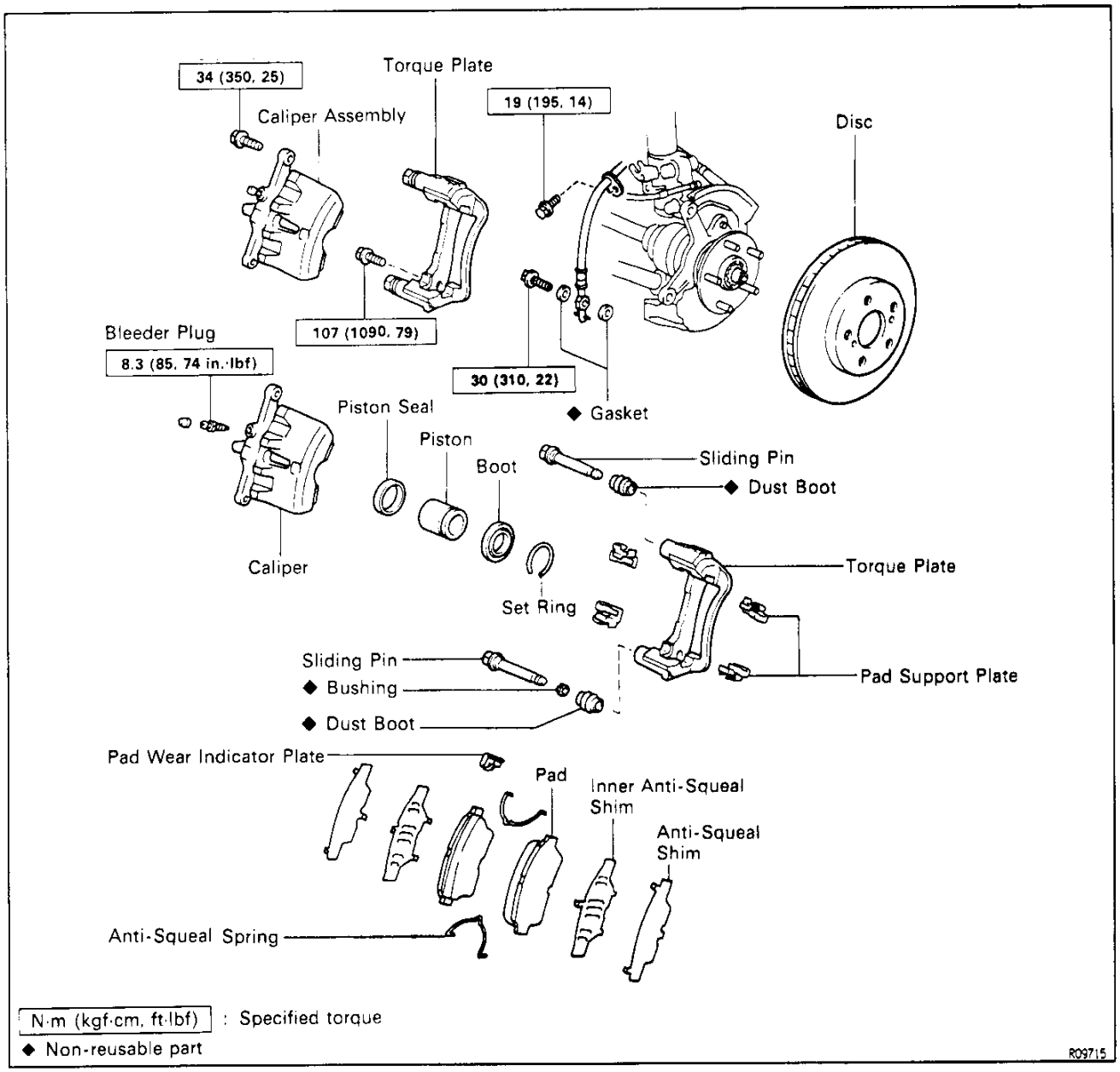

Downloaded from www.Manualslib.com manuals search engine

BR0RC-01

BRAKE PADS REPLACEMENT

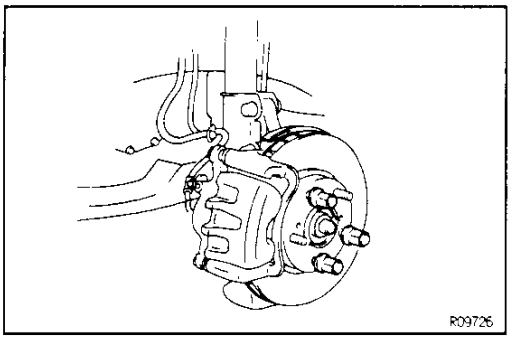

1. REMOVE FRONT WHEEL

Remove the wheel and temporarily fasten the disc with hub nuts.

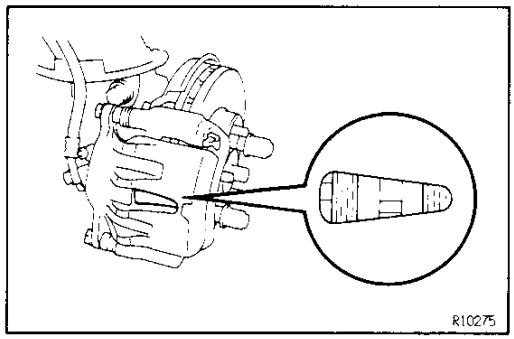

2. INSPECT PAD LINING THICKNESS

Check the pad thickness through the caliper inspection hole and replace the pads if it is not within the specification.

Minimum thickness:

1.0 mm (0.039 in.)

BR

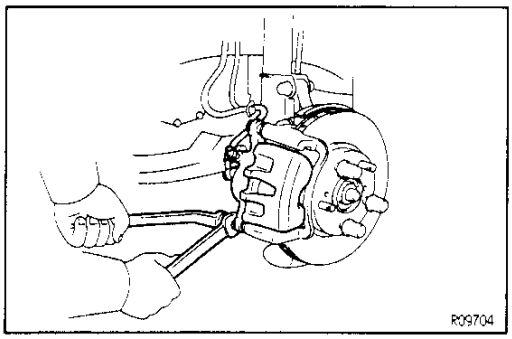

3. LIFT UP CALIPER

(a) Hold the sliding pin on the bottom and loosen the installation bolt.

(b) Remove the installation bolt.

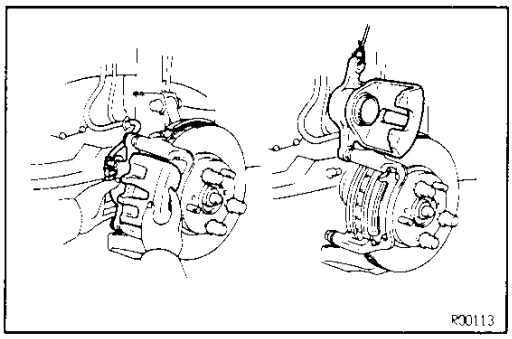

(c) Lift up and securely suspend the caliper.
HINT: Do not disconnect the flexible hose from the caliper.

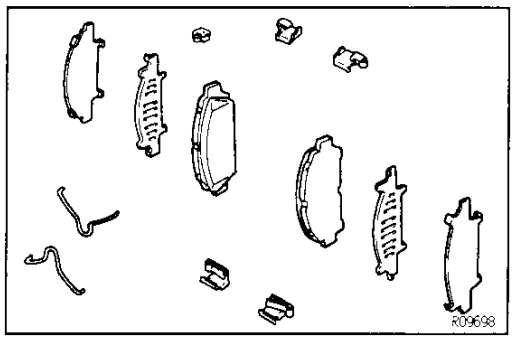

4. REMOVE FOLLOWING PARTS:

(a) 2 anti—squeal spring

(b) 2 brake pads

(c) 4 anti—squeal shims

(d) 4 pad support plates

5. CHECK DISC THICKNESS AND RUNOUT

(See page BR—40, 41)

Downloaded from www.Manualslib.com manuals search engine

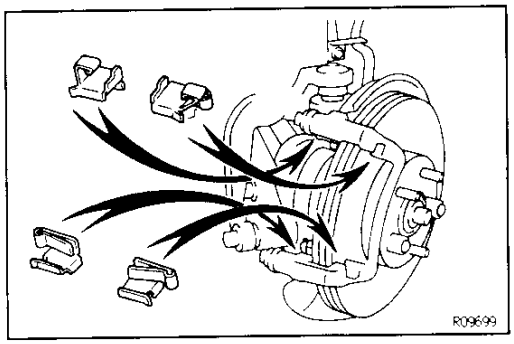

6. INSTALL PAD SUPPORT PLATES

Install the 4 pad support plates.

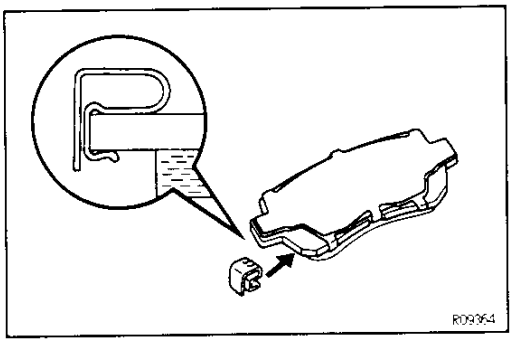

7. INSTALL NEW PADS

(a) Install a pad wear indicator plate on the inside pad.

(b) Apply disc brake grease to both sides of the inner anti—squeal shim.

(c) Install the anti—squeal shims on each pad.

BR

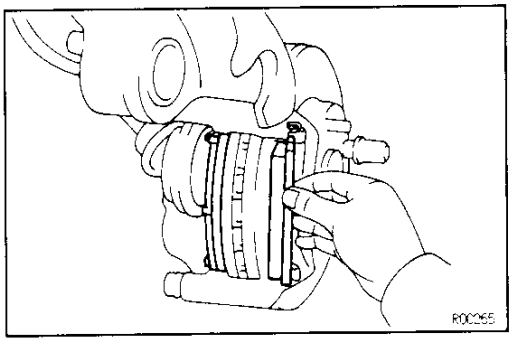

(d) Install inside pad with the pad wear indicator plate facing upward.

(e) Install outside pad.

NOTICE: There should be no oil or grease adhering to the friction surfaces of the pads or the disc.

(f) Install the 2 anti—squeal springs.

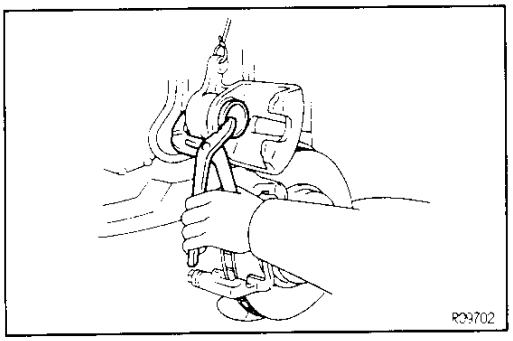

8. INSTALL CALIPER

(a) Draw out a small amount of brake fluid from the reservoir.

(b) Press in the piston with water pump pliers or similar implement.

HINT: If the piston is difficult to push in, loosen the bleeder plug and push in the piston while letting some brake fluid escape.

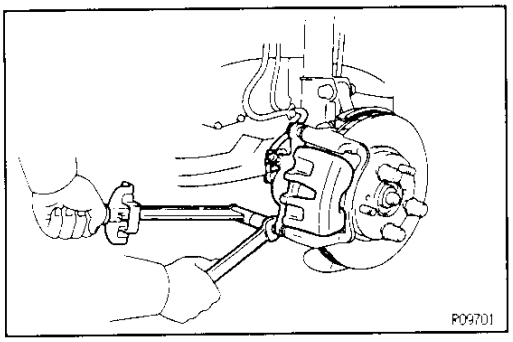

(c) Install the caliper.

(d) Hold the sliding pin and torque the installation bolt.

Torque: 34 N·m (350 kgf·cm, 25 ft·lbf)

9. INSTALL FRONT WHEEL

10. CHECK THAT FLUID LEVEL IS AT MAX LINE

Downloaded from www.Manualslib.com manuals search engine

BR01R-06

CALIPER REMOVAL

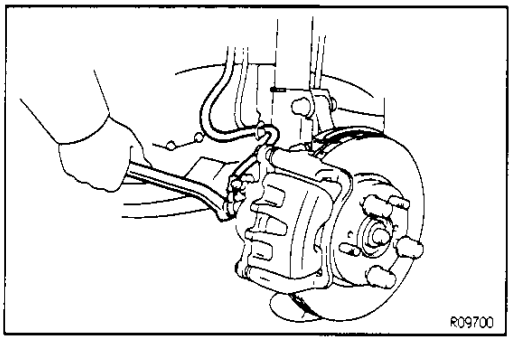

1. DISCONNECT FLEXIBLE HOSE

(a) Remove the union bolt and 2 gaskets from the caliper, then disconnect the flexible hose from the caliper.

(b) Use a container to catch the brake fluid as it drains out.

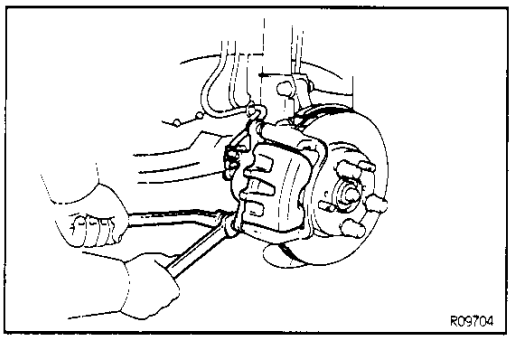

2. REMOVE CALIPER

(a) Hold the sliding pin and loosen the 2 installation bolts.

(b) Remove the 2 installation bolts.

(c) Remove the caliper from the torque plate.

BR

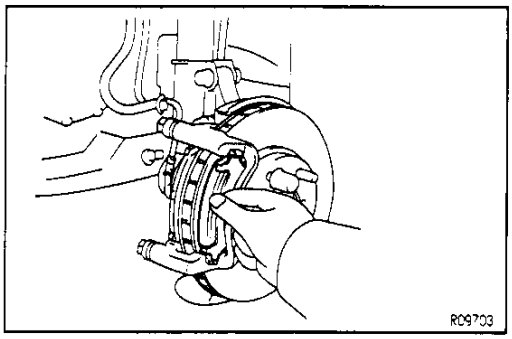

3. REMOVE 2 BRAKE PADS

Remove the inside and outside pads.

Downloaded from www.Manualslib.com manuals search engine

BR018-04

CALIPER DISASSEMBLY

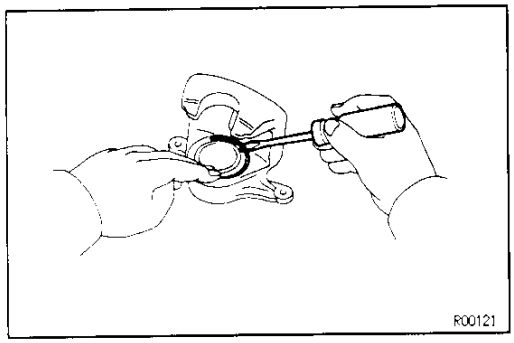

1. REMOVE CYLINDER BOOT SET RINGS AND CYLINDER BOOT

Using a screwdriver, remove the cylinder boot set ring and cylinder boot from the cylinder.

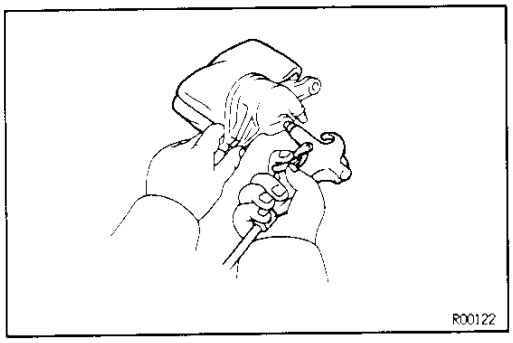

2. REMOVE PISTON

(a) Place a piece of cloth or similar article between the piston and the caliper.

(b) Use compressed air to remove the piston from the cylinder.

CAUTION: Do not place your fingers in front of the piston when using compressed air.

BR

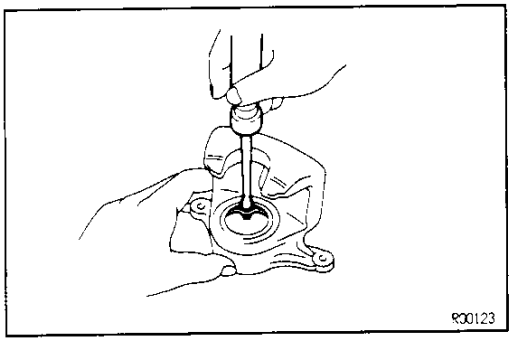

3. REMOVE PISTON SEAL

Using a screwdriver, remove the piston seal from the cylinder.

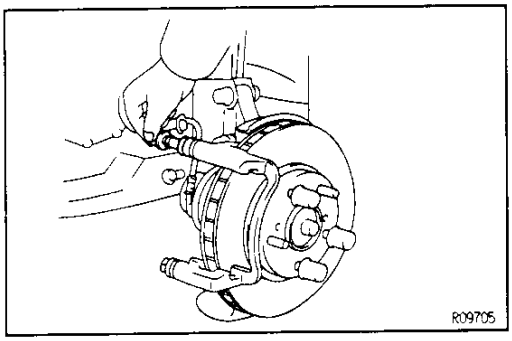

4. REMOVE SLIDING PINS AND DUST BOOTS

(a) Remove the 2 sliding pins from the torque plate.

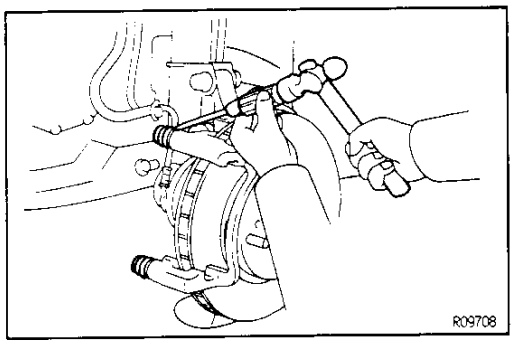

(b) Using a screwdriver and hammer, tap out the 2 dust boots.

Downloaded from www.Manualslib.com manuals search engine

BR01T-04

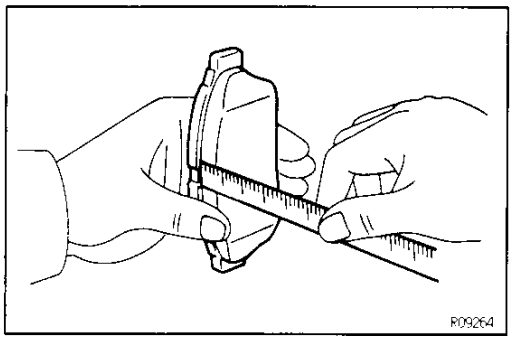

FRONT BRAKE COMPONENTS INSPECTION AND REPAIR

1. MEASURE PAD LINING THICKNESS

Using a ruler, measure the pad lining thickness.

Standard thickness:

11.0 mm (0.433 in.)

Minimum thickness:

1.0 mm (0.0039 in.)

Replace the pad if the pad's thickness is at the minimum thickness or less, or if the pad has severe uneven wear.

BR

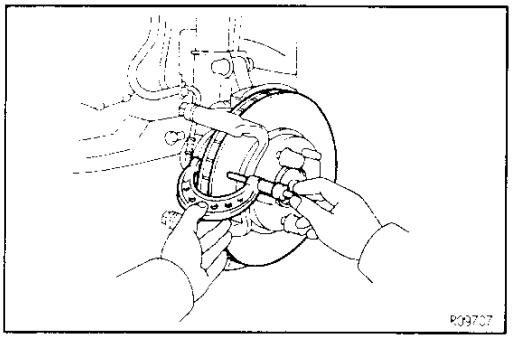

2. MEASURE DISC THICKNESS

Using a micrometer, measure the disc thickness.

Standard thickness:

28.0 mm (1.102 in.)

Minimum thickness:

26.0 mm (1.024 in.)

Replace the disc if the thickness of the disc is at the minimum thickness or less. Replace the disc or grind it on a lathe if it is scored or is worn unevenly.

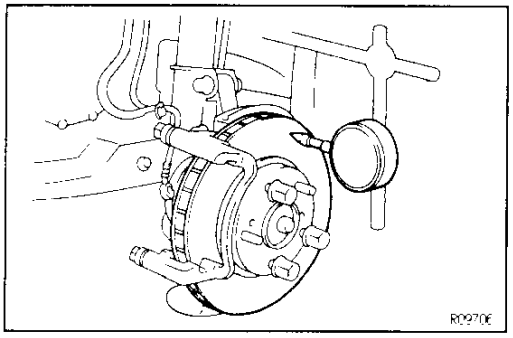

3. MEASURE DISC RUNOUT

Measure disc runout 10 mm (0.39 in.) from the outer edge of the disc.

Maximum disc runout:

0.05 mm (0.0020 in.)

If runout greater than maximum, attempt to adjust to below this maximum figure.

HINT: Before measuring the runout, confirm that the front bearing play is within specification.

Downloaded from www.Manualslib.com manuals search engine

4. IF NECESSARY, ADJUST DISC RUNOUT

(a) Remove the toruqe plate from the knuckle.

(b) Remove the 5 hub nuts and the disc. Reinstall the disc 1/5 of a turn round from its original position on the hub. Install and torque the 5 hub nuts.
Torque: 103 N·m (1,050 kgf·cm, 76 ft·lbf)
Remeasure the disc runout. Make a note of this runout and the disc's position on the hub.

(c) Repeat (b) until the disc has installed on the 3 remaining hub position.

(d) If the minimum runout recorded in (b) and (c) is less than 0.05 mm (0.0020 in.), install the disc in that position.

(e) If the minimum runout recorded in (b) and (c) is greater than 0.05 mm (0.0020 in.), replace the disc and repeat step 3.

BR

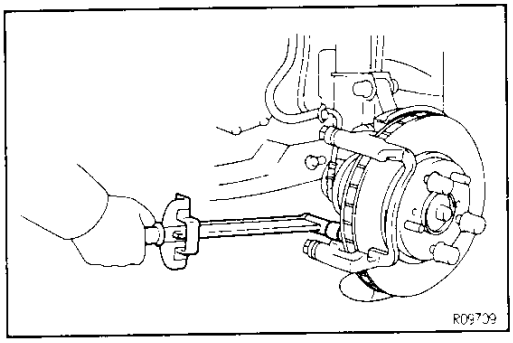

(f) Install the torque plate and torque the mounting bolts.
Torque: 107 N·m (1,090 kgf·cm, 79 ft·lbf)

Downloaded from www.Manualslib.com manuals search engine

BR01U-03

CALIPER ASSEMBLY

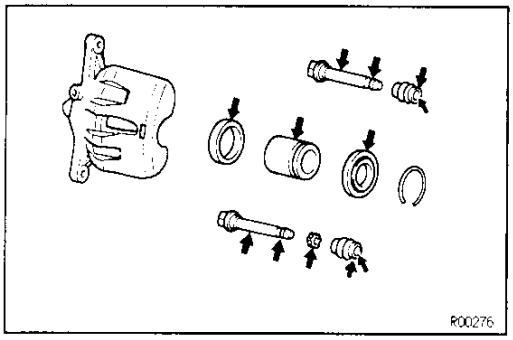

1. APPLY LITHIUM SOAP BASE GLYCOL GREASE TO PARTS INDICATED WITH ARROWS

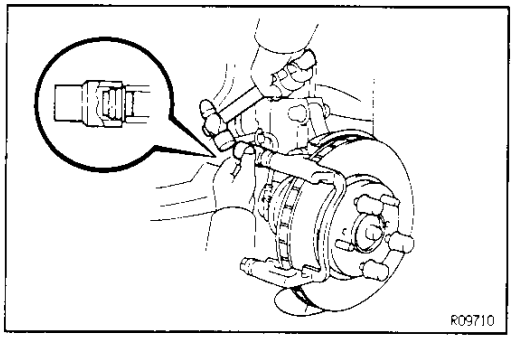

2. INSTALL DUST BOOTS AND SLIDING PINS

(a) Using a 19 mm socket wrench and hammer, tap in 2 new dust boots into the torque plate.

(b) Confirm that the metal plate portion of the dust boot fits snugly in the torque plate.

BR

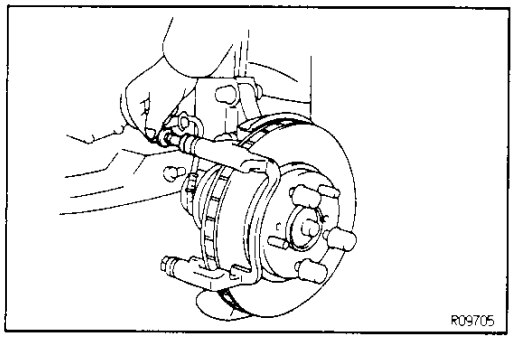

(c) Insert 2 sliding pins into the torque plate.
NOTICE: Insert the sliding pin with sliding bushing into the bottom side.

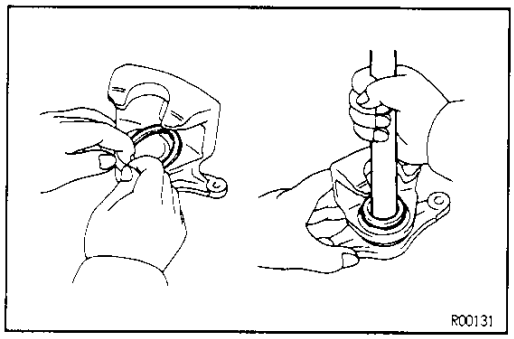

3. INSTALL PISTON SEAL AND PISTON IN CYLINDER

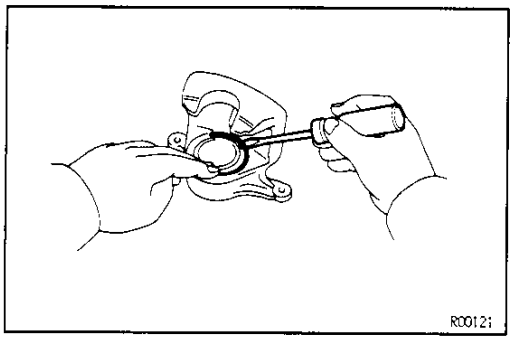

4. INSTALL CYLINDER BOOT AND CYLINDER BOOT SET RING

Downloaded from www.Manualslib.com manuals search engine

BR01V-06

CALIPER INSTALLATION

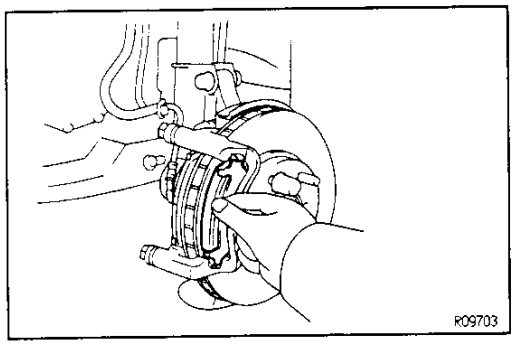

1. INSTALL 2 BRAKE PADS

Install the inside and outside pads.

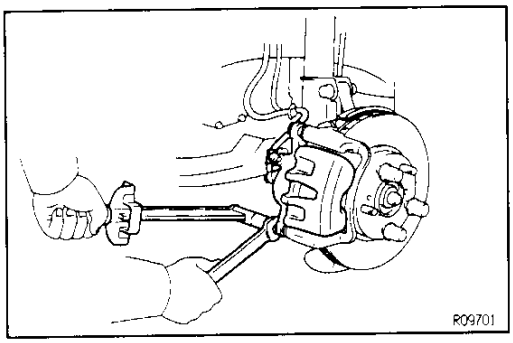

2. INSTALL CALIPER

(a) Temporarily install the caliper on the torque plate with 2 installation bolts.

(b) Hold the sliding pin and torque the installation bolt.
Torque: 34 N·m (350 kgf·cm, 25 ft·lbf)

BR

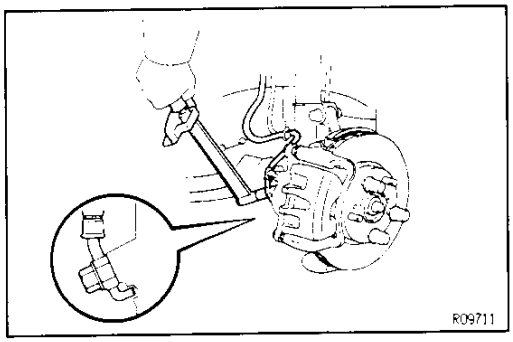

3. CONNECT FLEXIBLE HOSE

Install the flexible hose on the caliper with 2 new gaskets.
Torque: 30 N·m (310 kgf·cm, 22 ft·lbf)
HINT: Install the flexible hose lock securely in the lock hole in the brake caliper.

4. FILL BRAKE RESERVOIR WITH BRAKE FLUID AND BLEED BRAKE SYSTEM
(See page BR—9)

5. CHECK FOR LEAKS

Downloaded from www.Manualslib.com manuals search engine

FRONT BRAKE
(3S—GE w/ Super Strut Type)
COMPONENTS

BR06Y-02

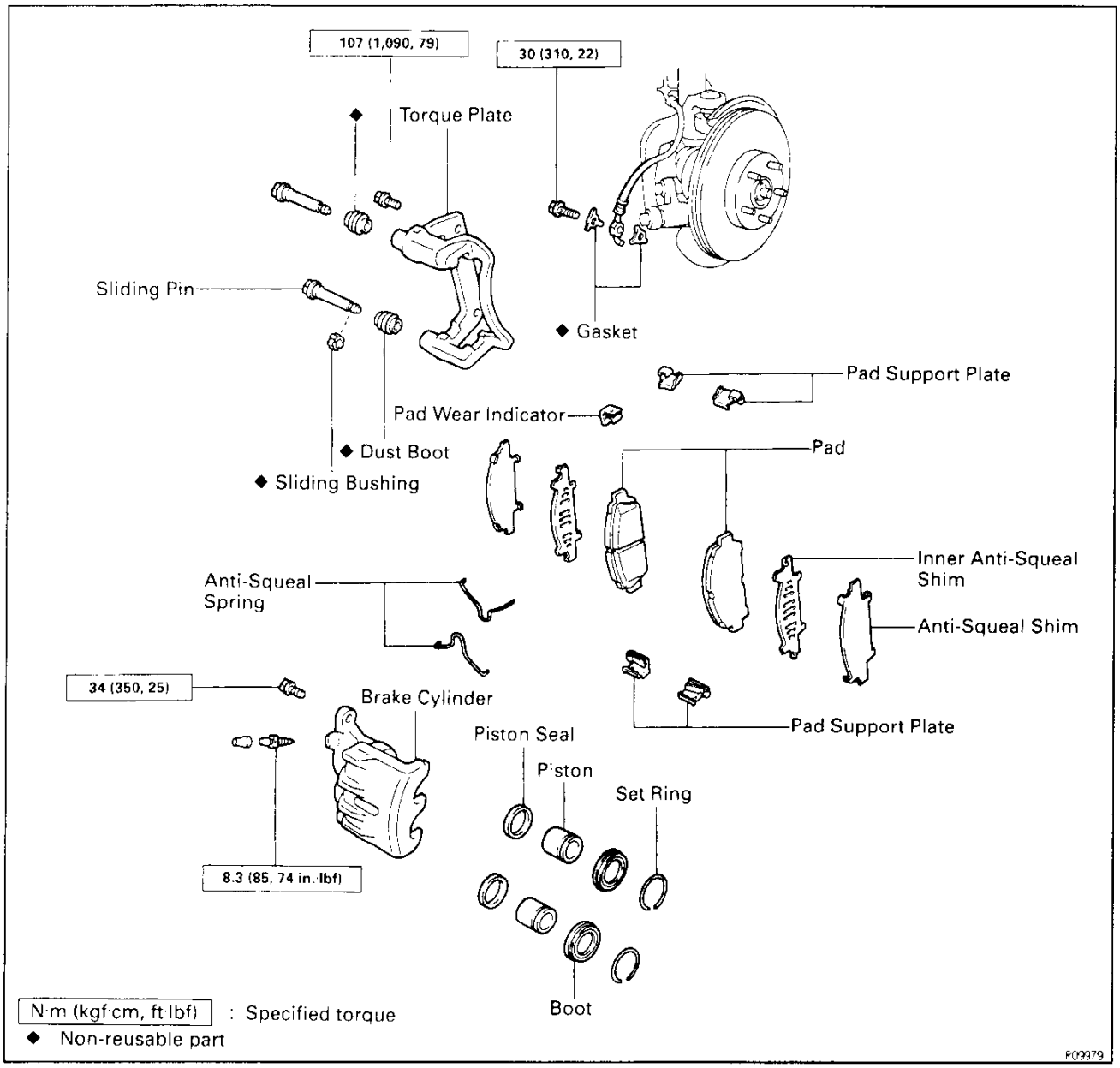

BR

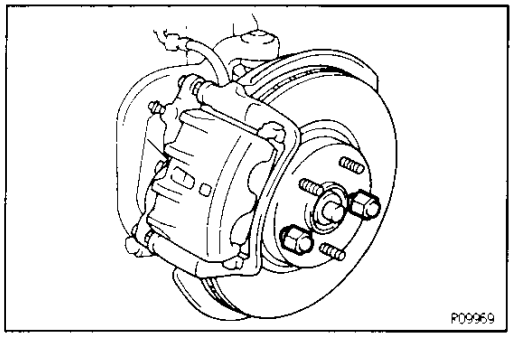

BR06Z-02

BRAKE PADS REPLACEMENT

1. **REMOVE FRONT WHEEL**
   Remove the wheel and temporarily fasten the disc with the hub nuts.

Downloaded from www.Manualslib.com manuals search engine

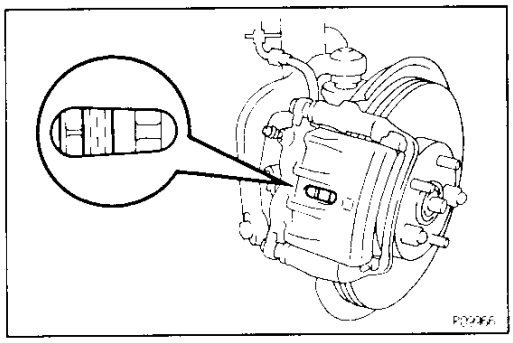

2. INSPECT PAD LINING THICKNESS

Check the pad thickness through the caliper inspection hole and replace the pads if it is not within the specification.

Minimum thickness:

1.0 mm (0.039 in.)

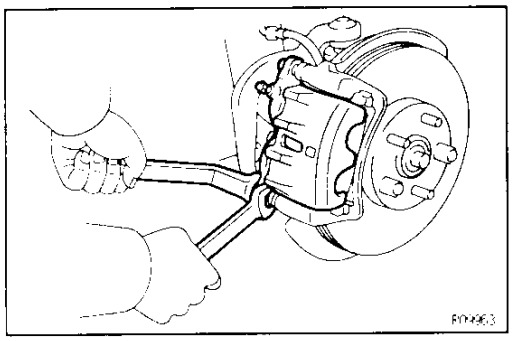

3. LIFT UP CALIPER

(a) Hold the sliding pin and loosen the 2 installation bolts.

(b) Remove the installation bolts.

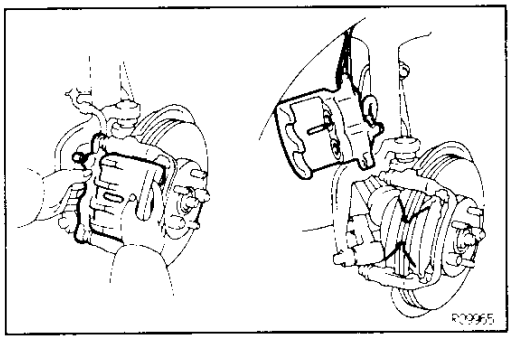

(c) Remove the caliper and suspend it securely. Ensure that hose is not stretched.

HINT: Do not disconnect the flexible hose from the caliper.

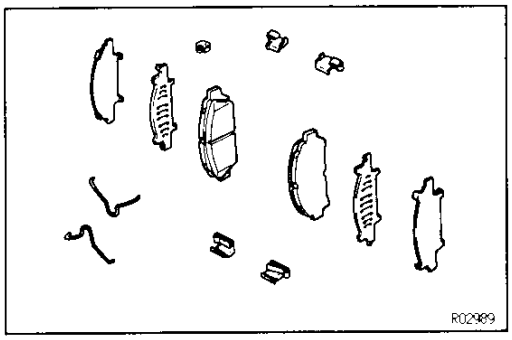

4. REMOVE FOLLOWING PARTS:

(a) 2 anti–squeal springs

(b) 2 brake pads

(c) 4 anti–squeal shims

(d) 4 pad support plates

(e) Pad wear indicator

5. CHECK DISC THICKNESS AND RUNOUT

(See page BR–49)

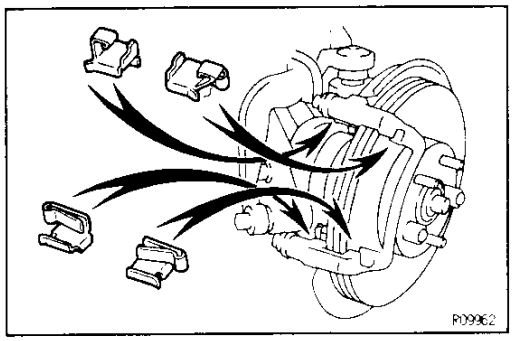

6. INSTALL PAD SUPPORT PLATES

Install the 4 pad support plates.

Downloaded from www.Manualslib.com manuals search engine

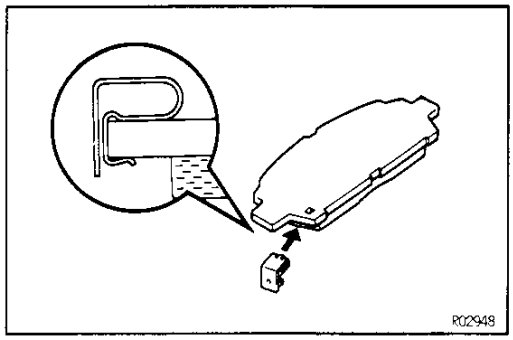

7. INSTALL NEW PADS

HINT: If a brake pad needs replacing, the front brake pads must be replaced as a set.

(a) Install the pad wear indicator plate on a new pad.

(b) Apply disc brake grease to both sides of the inner anti—squeal shim.

(c) Install the 2 anti—squeal shims on each pad.

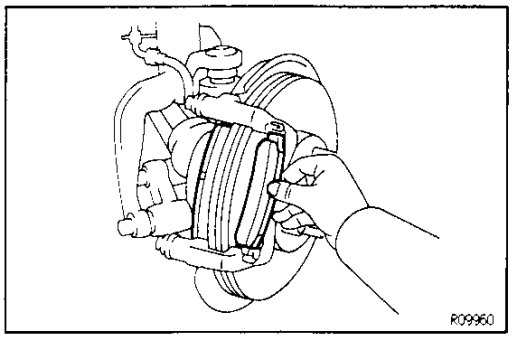

(d) Install inside pad with the pad wear indicator plate facing upward.

(e) Install outside pad.

NOTICE: There should be no oil or grease adhering to the friction surfaces of the pads or the disc.

BR

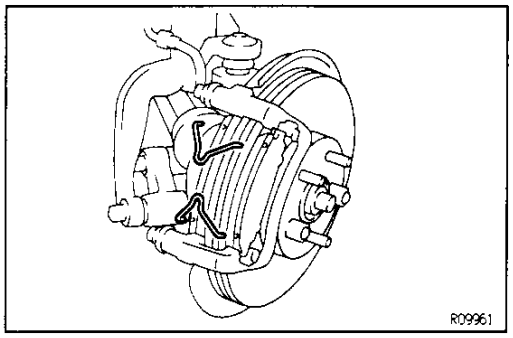

(f) Install the 2 anti—squeal springs to the pads.

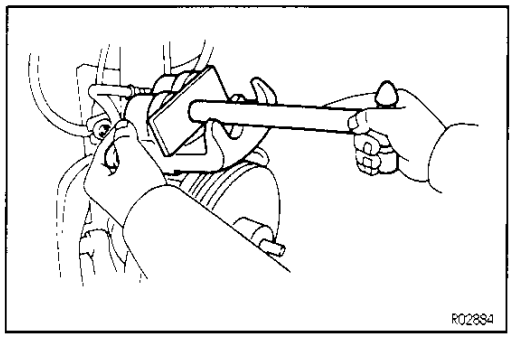

8. INSTALL CALIPER

(a) Draw out a small amount of brake fluid from the reservoir tank.

(b) Press in the pistons with a hammer handle or an equivalent.

HINT: If the pistons are difficult to push in, loosen the bleeder plug and push in the pistons while letting some brake fluid escape.

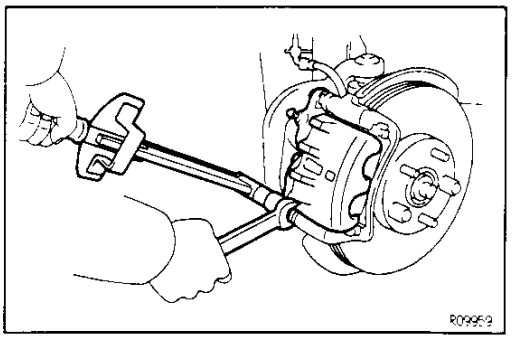

(c) Install the caliper.

(d) Hold the sliding pin and torque the installation bolts.

Torque: 34 N·m (350 kgf·cm, 25 ft·lbf)

9. INSTALL FRONT WHEEL

10. CHECK THAT FLUID LEVEL IS AT MAX LINE

Downloaded from www.Manualslib.com manuals search engine

BR090-02

CALIPER REMOVAL

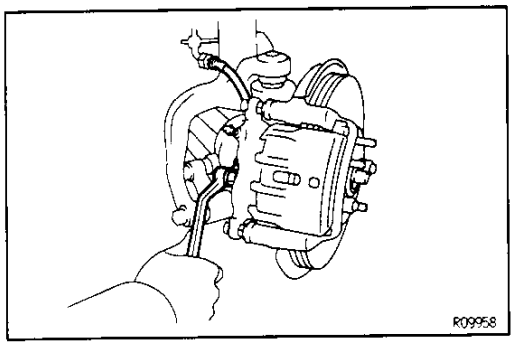

1. DISCONNECT FLEXIBLE HOSE

(a) Remove the union bolt and 2 gaskets from the caliper, then disconnect the flexible hose from the caliper.

(b) Use a container to catch the brake fluid as it drains out.

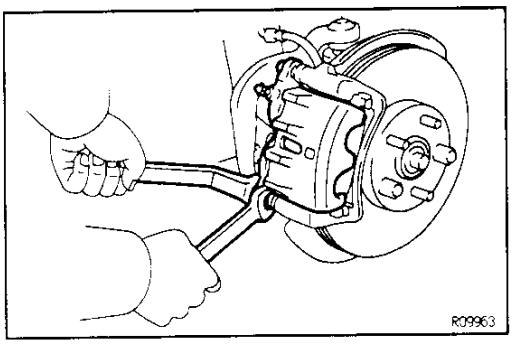

2. REMOVE CALIPER

(a) Hold the sliding pin and loosen the 2 installation bolts.

(b) Remove the 2 installation bolts.

(c) Remove the caliper from the torque plate.

BR

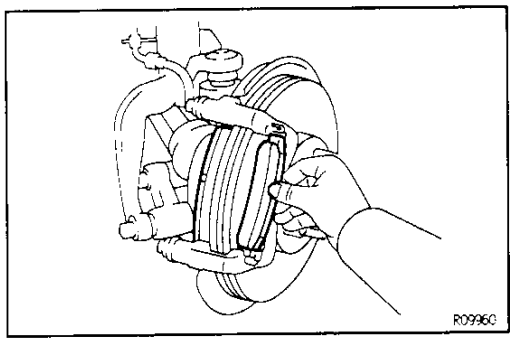

3. REMOVE 2 BRAKE PADS

Remove the inside and outside pads.

BR091-02

CALIPER DISASSEMBLY

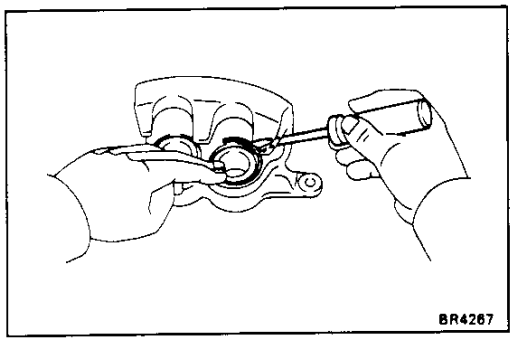

1. REMOVE CYLINDER BOOT SET RINGS AND CYLINDER BOOTS

Using a screwdriver, remove the cylinder boot set rings and cylinder boots from the cylinder.

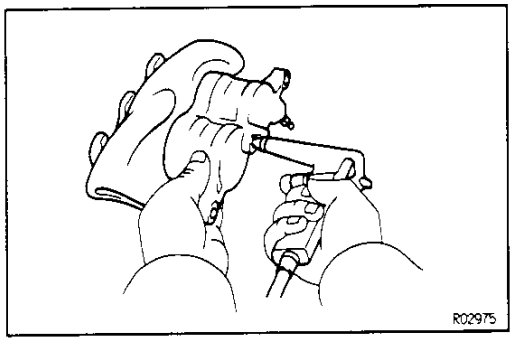

2. REMOVE PISTONS

(a) Place a piece of cloth or similar article between the pistons and the caliper.

(b) Use compressed air to remove the pistons from the cylinder.

CAUTION: Do not place your fingers in front of the piston when using compressed air.

Downloaded from www.Manualslib.com manuals search engine

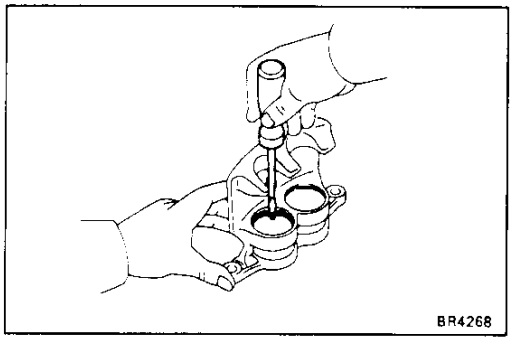

3. REMOVE PISTON SEALS

Using a screwdriver, remove the piston seals from the cylinder.

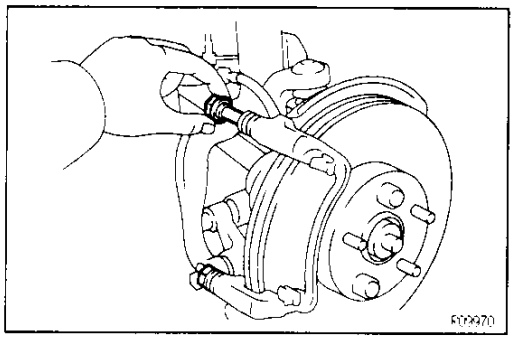

4. REMOVE SLIDING PINS AND DUST BOOTS

(a) Remove the 2 sliding pins from the torque plate.

BR

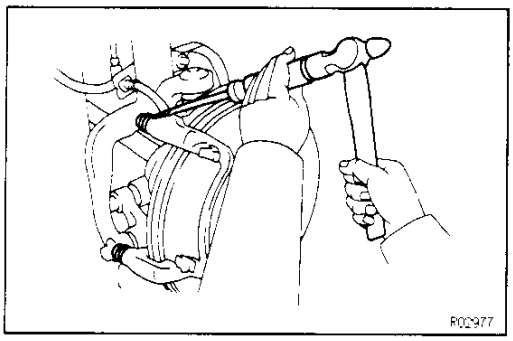

(b) Using a screwdriver and hammer, tap out the 2 dust boots.

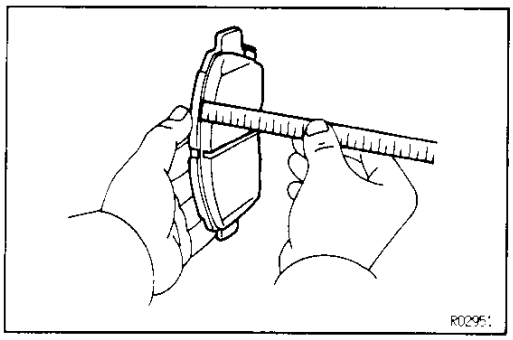

FRONT BRAKE COMPONENTS INSPECTION AND REPAIR

BR092–02

1. MEASURE PAD LINING THICKNESS

Using a ruler, measure the pad lining thickness.

Standard thickness:

12.0 mm (0.472 in.)

Minimum thickness:

1.0 mm (0.039 in.)

Replace the pads as a set if the pad's thickness is at the minimum thickness or less, or if the pad has severe uneven wear.

Downloaded from www.Manualslib.com manuals search engine

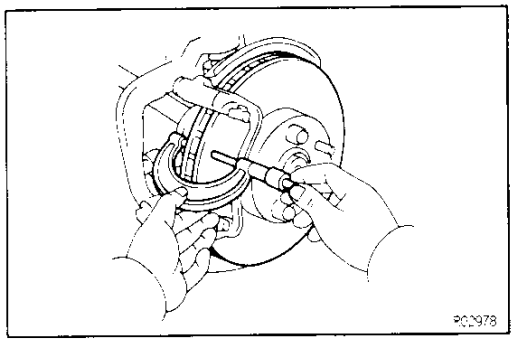

2. MEASURE DISC THICKNESS

Using a micrometer, measure the disc thickness.

Standard thickness:

28 mm (1.102 in.)

Minimum thickness:

26 mm (1.024 in.)

Replace the disc if the thickness of the disc is at the minimum thickness or less. Replace the disc or grind it on a lathe if it is scored or is worn unevenly.

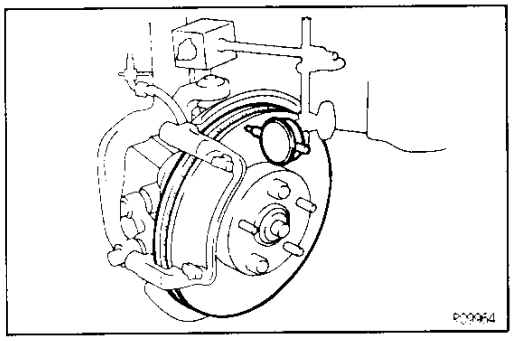

3. MEASURE DISC RUNOUT

Measure disc runout 10 mm (0.39 in.) from the outer edge of the disc.

Maximum disc runout:

0.05 mm (0.0020 in.)

If runout greater than maximum, attempt to adjust to below this maximum figure.

HINT: Before measuring the runout, confirm that the front bearing play is within specification.

4. IF NECESSARY, ADJUST DISC RUNOUT

(a) Remove the torque plate from the knuckle.

(b) Remove the 5 hub nuts and the disc. Reinstall the disc 1/5 of a turn round from its original position on the hub. Install and torque the 5 hub nuts.

Torque: 107 N·m (1,090 kgf·cm, 79 ft·lbf)

Remeasure the disc runout. Make a note of the runout and the disc's position on the hub.

(c) Repeat (b) until the disc has been installed on the 3 remaining hub position.

(d) If the minimum runout recorded in (b) and (c) is less than 0.05 mm (0.0020 in.), install the disc in that position.

(e) If the minimum runout recorded in (b) and (c) is greater than 0.05 mm (0.0020 in.), replace the disc and repeat step 3.

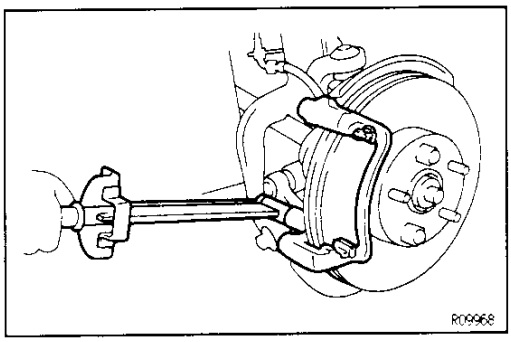

(f) Install the torque plate and torque the mounting bolts.

Torque: 107 N·m (1,090 kgf·cm, 79 ft·lbf)

BR

Downloaded from www.Manualslib.com manuals search engine

BR093-02

CALIPER ASSEMBLY

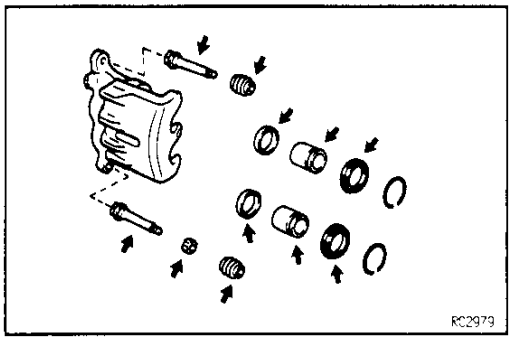

1. **APPLY LITHIUM SOAP BASE GLYCOL GREASE TO PARTS INDICATED WITH ARROWS**

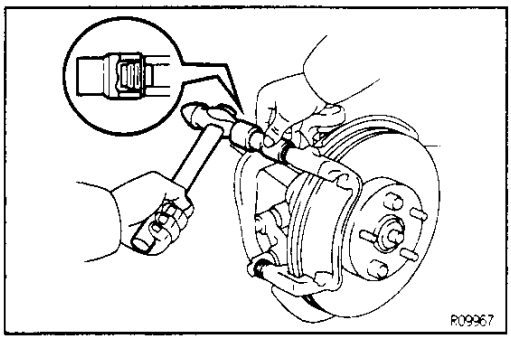

2. **INSTALL DUST BOOTS AND SLIDING PINS**
   (a) Using a 19 mm socket wrench and hammer, tap in 2 new dust boots into the torque plate.
   (b) Confirm that the metal plate portion of the dust boot fits snugly in the torque plate.

BR

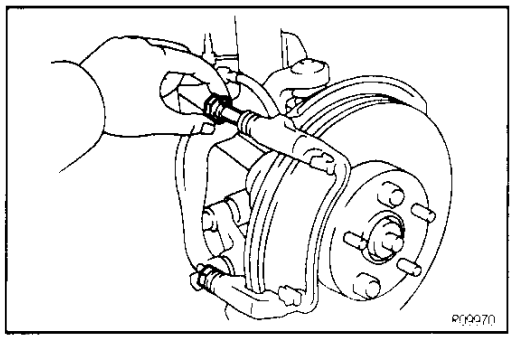

   (c) Insert the 2 sliding pins into the torque plate.
   NOTICE: Insert the sliding pin with the sliding bushing into the bottom side.

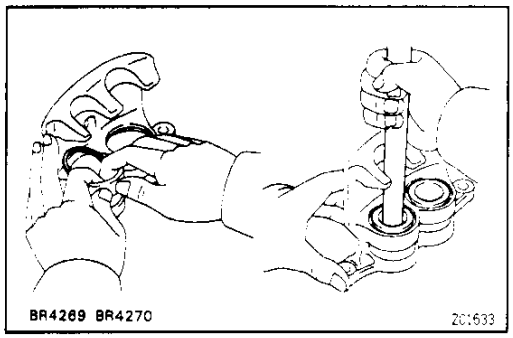

3. **INSTALL PISTON SEALS AND PISTONS IN CYLINDER**

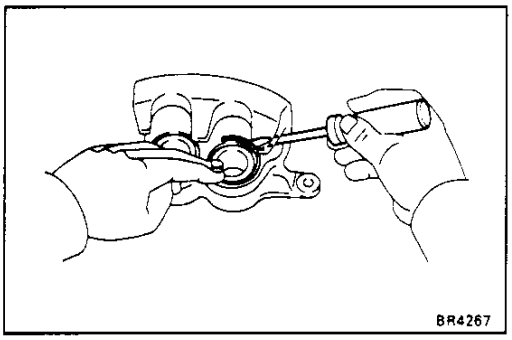

4. **INSTALL CYLINDER BOOTS AND CYLINDER BOOT SET RINGS**

Downloaded from www.Manualslib.com manuals search engine

BR064-02

CYLINDER INSTALLATION

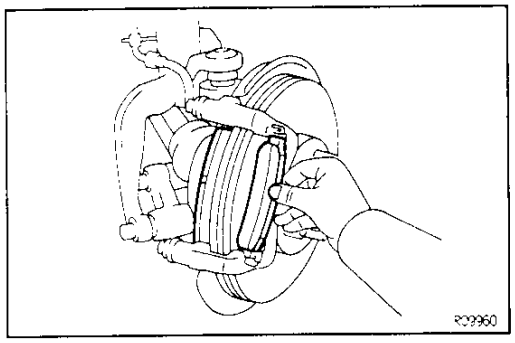

1. **INSTALL 2 BRAKE PADS**
   Install the inside and outside pads.

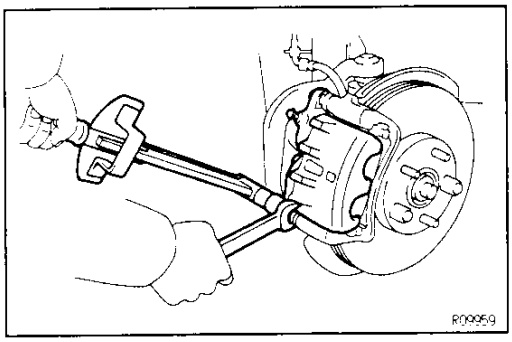

2. **INSTALL CYLINDER**
   (a) Temporarily install the caliper on the torque plate with the 2 installation bolts.
   (b) Hold the sliding pin and torque the installation bolt.
   Torque: 34 N·m (350 kgf·cm, 25 ft·lbf)

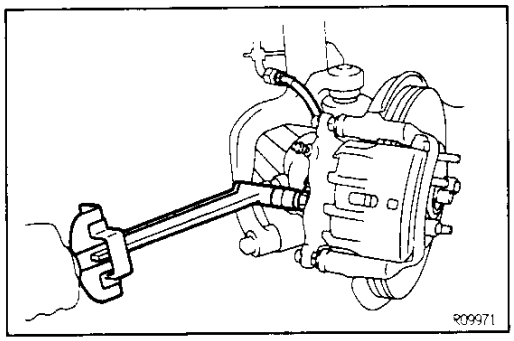

3. **CONNECT FLEXIBLE HOSE**
   Install the flexible hose on the caliper with 2 new gaskets.
   Torque: 30 N·m (310 kgf·cm, 22 ft·lbf)
4. **FILL BRAKE RESERVOIR WITH BRAKE FLUID AND BLEED BRAKE SYSTEM**
   (See page BR–9)
5. **CHECK FOR LEAKS**

Downloaded from www.Manualslib.com manuals search engine

REAR BRAKE
(Disc Brake)
COMPONENTS

BR047-06

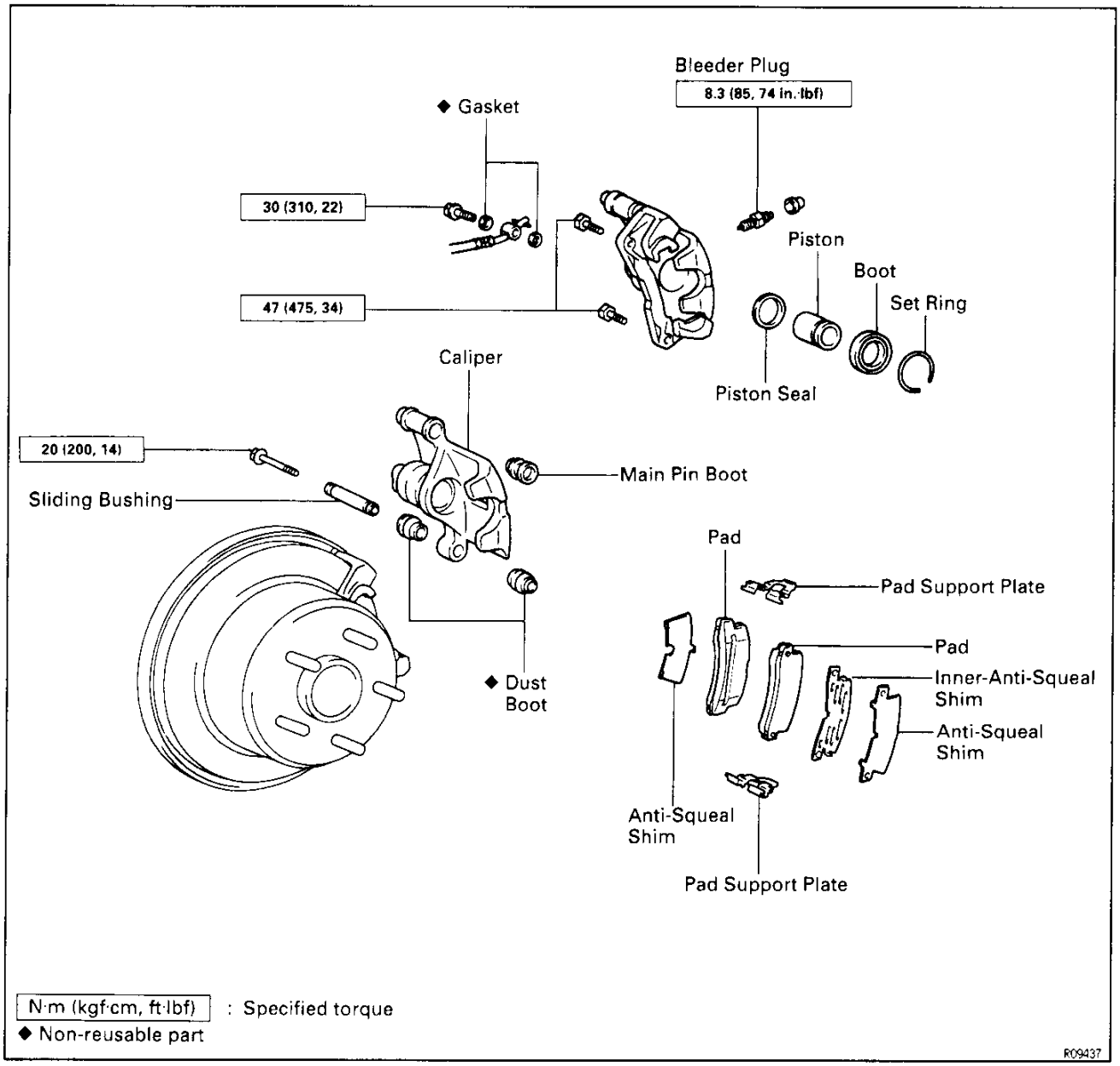

BR

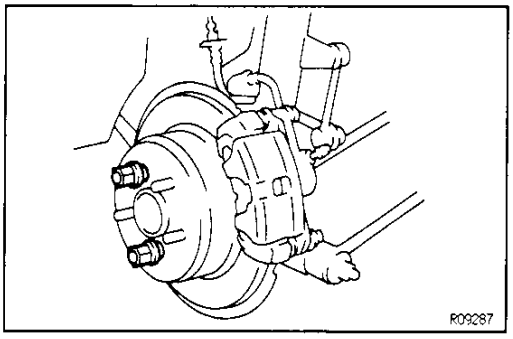

BR048-06

BRAKE PADS REPLACEMENT

1. **REMOVE REAR WHEEL**
   Remove the wheel and temporarily fasten the disc with the hub nuts.

Downloaded from www.Manualslib.com manuals search engine

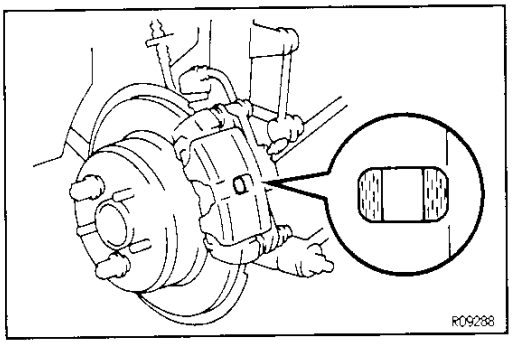

2. INSPECT PAD LINING THICKNESS

Check the pad thickness through the caliper inspection hole and replace pads if not within specification.

Minimum thickness:

1.0 mm (0.039 in.)

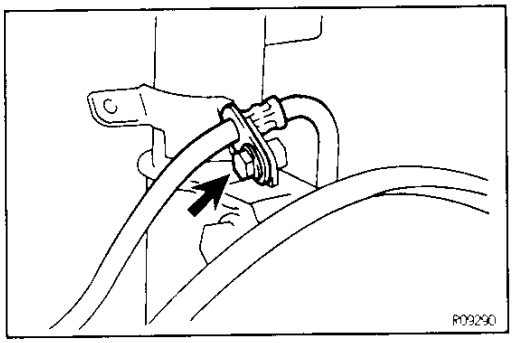

3. LIFT UP CALIPER

(a) Remove the flexible hose bracket.

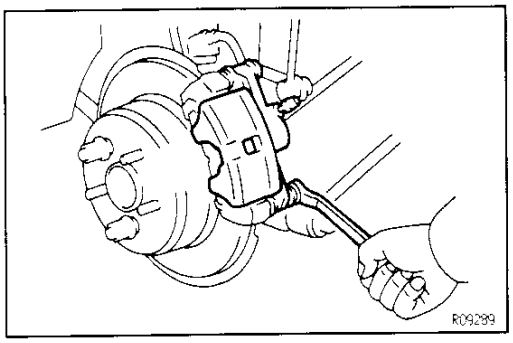

(b) Remove the installation bolt.

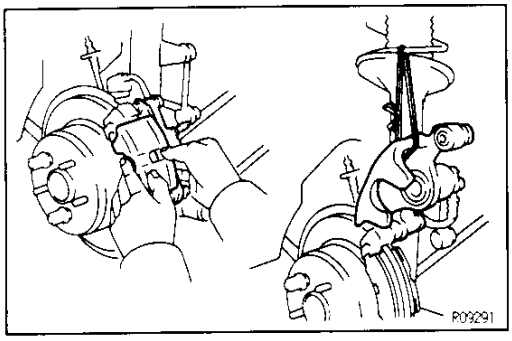

(c) Lift up and securely suspend the caliper.
HINT: Do not disconnect the flexible hose from the caliper.

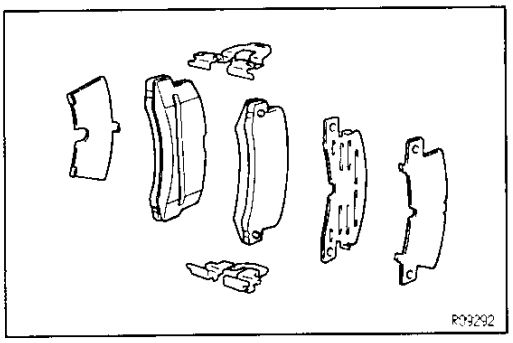

4. REMOVE FOLLOWING PARTS:

(a) 2 brake pads
(b) 3 anti—squeal shims
(c) 2 pad support plates

5. CHECK DISC THICKNESS AND RUNOUT

(See page BR—57)

Downloaded from www.Manualslib.com manuals search engine

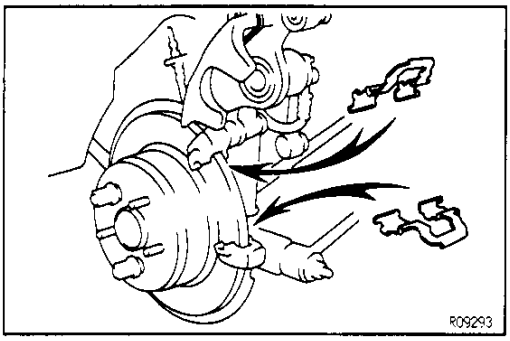

6. INSTALL PAD SUPPORT PLATES

Install the 2 pad support plates.

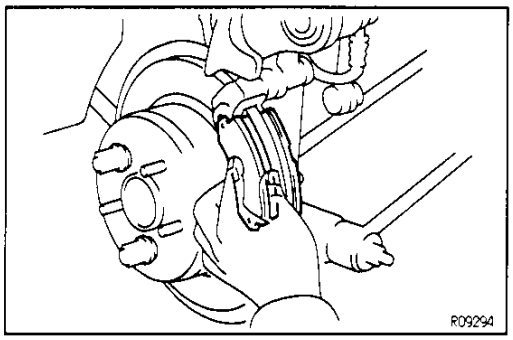

7. INSTALL NEW PADS

HINT: If a brake pad needs replacing, the rear brake pads must be replaced as a set.

(a) Apply disc brake grease to both sides of the inner anti—squeal shim.

(b) Install the 2 anti—squeal shims to the outside pad.

(c) Install the anti—squeal shim to the inside pad.

(d) Install 2 pads with the pad wear indicator plate facing downward.

NOTICE: There should be no oil or grease adhering to the friction surfaces of the pads or the disc.

BR

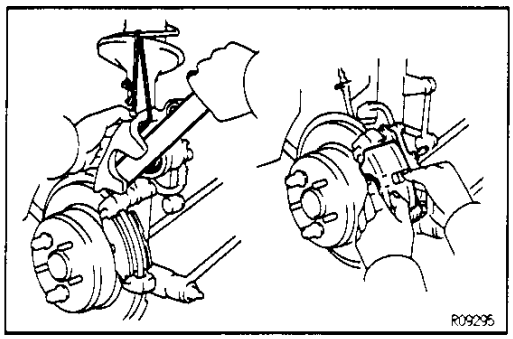

8. INSTALL CALIPER

(a) Draw out a small amount of brake fluid from the reservoir.

(b) Press in the piston with a hammer handle or an equivalent.

HINT: If the piston is difficult to push in, loosen the bleeder plug and push in the piston while letting some brake fluid escape.

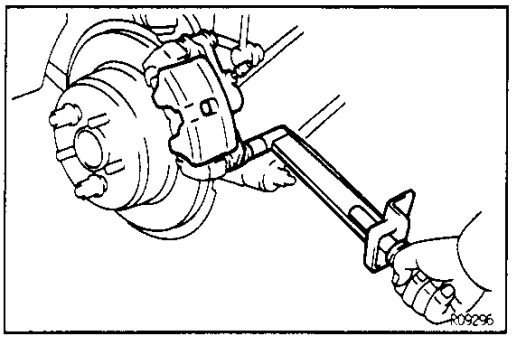

(c) Install the caliper and torque the installation bolt.

Torque: 20 N·m (200 kgf·cm, 14 ft·lbf)

Downloaded from www.Manualslib.com manuals search engine

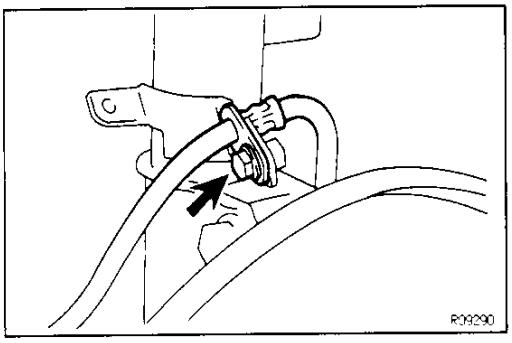

(d) Install the flexible hose bracket.
Torque: 19 N·m (192 kgf·cm, 14 ft·lbf)

9. INSTALL REAR WHEEL

10. CHECK THAT FLUID LEVEL IS AT MAX LINE

BR049-04

CALIPER REMOVAL

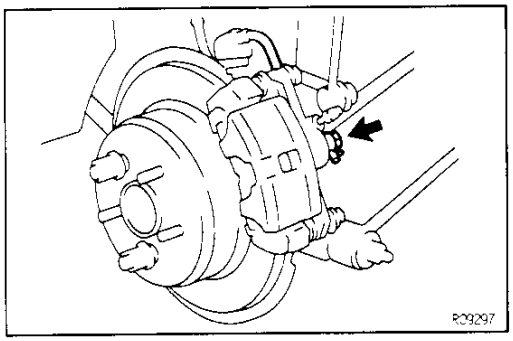

1. DISCONNECT FLEXIBLE HOSE

(a) Remove the union bolt and 2 gaskets from the caliper, then disconnect the flexible hose from the caliper.

(b) Use a container to catch the brake fluid as it drains out.

BR

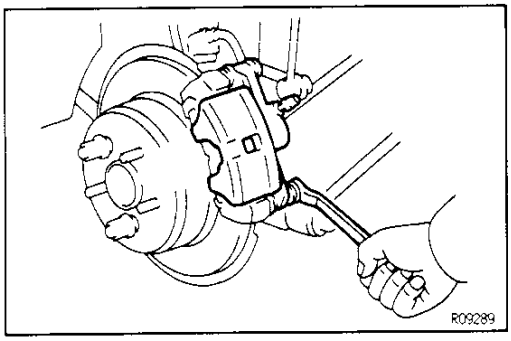

2. REMOVE CALIPER

(a) Remove the installation bolt.

(b) Remove the caliper from the torque plate.

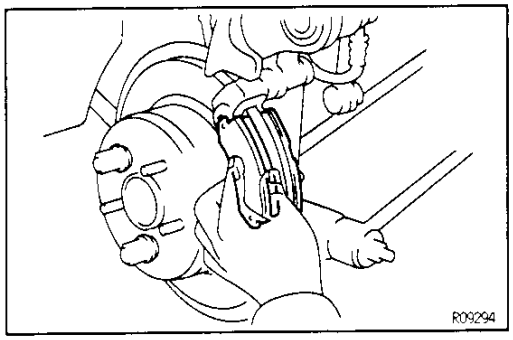

3. REMOVE 2 PADS

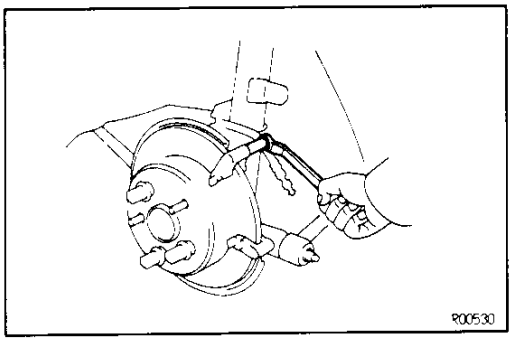

4. REMOVE MAIN PIN

Loosen the main pin installation bolt and remove the main pin.

Downloaded from www.Manualslib.com manuals search engine

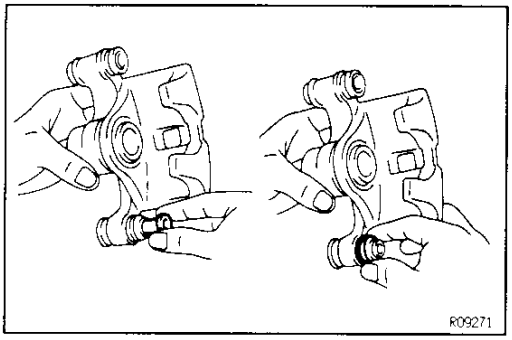

CALIPER DISASSEMBLY

1. REMOVE SLIDING BUSHING AND DUST BOOTS

Pull out the sliding bushing and remove the 2 boots.

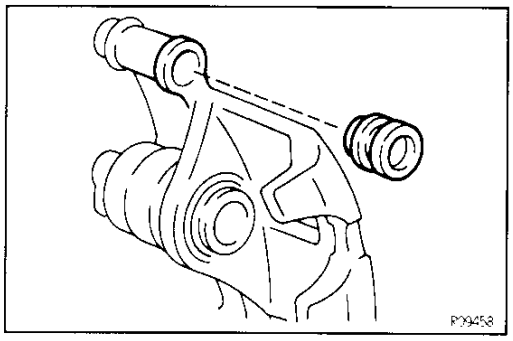

2. REMOVE MAIN PIN BOOT

Pull out the main pin boot.

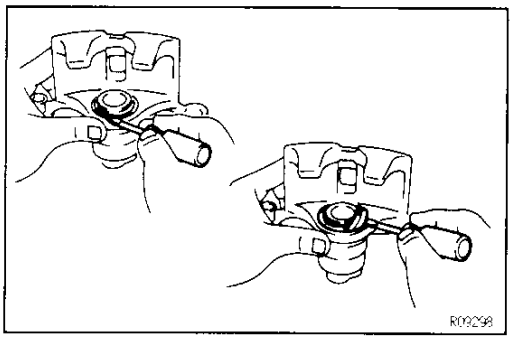

3. REMOVE CYLINDER BOOT SET RING AND CYLINDER BOOT

Using a screwdriver, remove the cylinder boot set ring and cylinder boot from the cylinder.

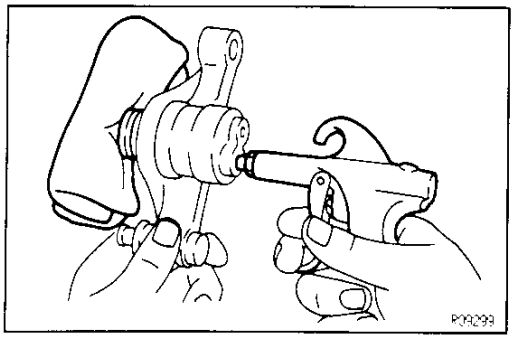

4. REMOVE PISTON

(a) Place a piece of cloth or similar article between the piston and the caliper.

(b) Use compressed air to remove the piston from the cylinder.

CAUTION: Do not place your fingers in front of the piston when using compressed air.

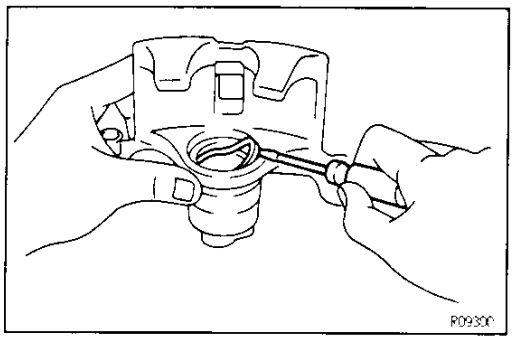

5. REMOVE PISTON SEAL

Using a screwdriver, remove the piston seal from the cylinder.

Downloaded from www.Manualslib.com manuals search engine

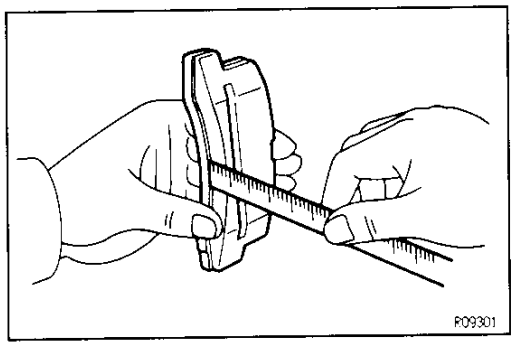

REAR BRAKE COMPONENTS INSPECTION AND REPAIR

1. MEASURE PAD LINING THICKNESS

Using a ruler, measure the pad lining thickness.

Standard thickness:

10.0 mm (0.394 in.)

Minimum thickness:

1.0 mm (0.039 in.)

Replace the pads as a set if the pad thickness is at the minimum thickness or less, or if the pad has severe, uneven wear.

BR

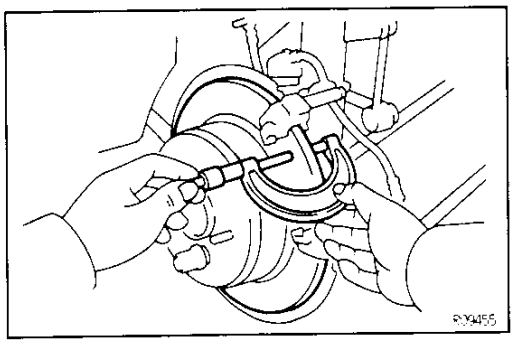

2. MEASURE DISC THICKNESS

Using a micrometer, measure the disc thickness.

Standard thickness:

10.0 mm (0.394 in.)

Minimum thickness:

9.0 mm (0.354 in.)

Replace the disc if the thickness of the disc is at the minimum thickness or less. Replace the disc or grind it on a lathe if it is scored or is worn unevenly.

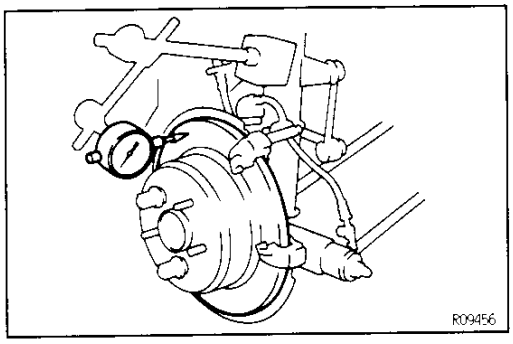

3. MEASURE DISC RUNOUT

Measure the disc runout at 10 mm (0.39 in.) from the outer edge of the disc.

Maximum disc runout:

0.15 mm (0.0059 in.)

If the runout is greater than the maximum, replace the disc.

HINT: Before measuring the runout, confirm that the hub bearing play is within specification.

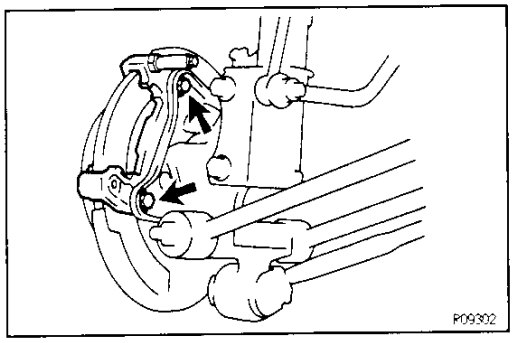

4. IF NECESSARY, REPLACE DISC

(a) Remove the torque plate.

(b) Remove the hub nuts of the temporarily installed disc and pull off the disc.

(c) Install a new disc and loosely install the hub nuts.

Downloaded from www.Manualslib.com manuals search engine

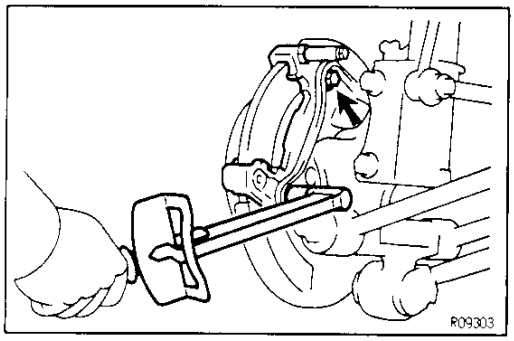

(d) Install the torque plate and tighten the mounting bolts.
Torque: 47 N·m (475 kgf·cm, 34 ft·lbf)

CALIPER ASSEMBLY

SR097-02

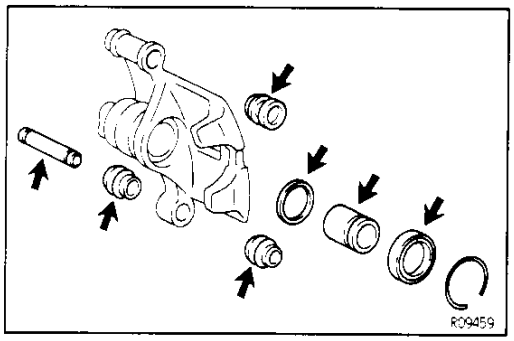

1. **APPLY LITHIUM SOAP BASE GLYCOL GREASE TO PARTS INDICATED WITH ARROWS**

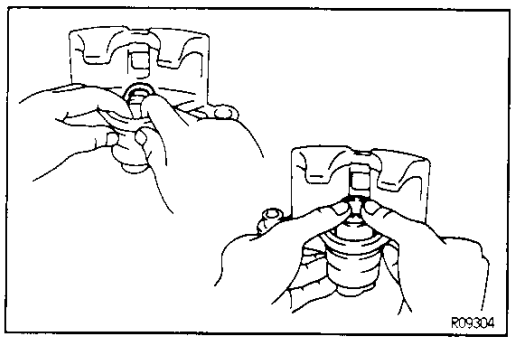

2. **INSTALL PISTON SEAL AND PISTON IN CYLINDER**

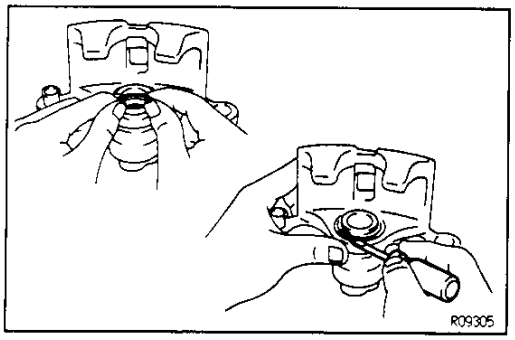

3. **INSTALL CYLINDER BOOT AND SET RING IN CYLINDER**

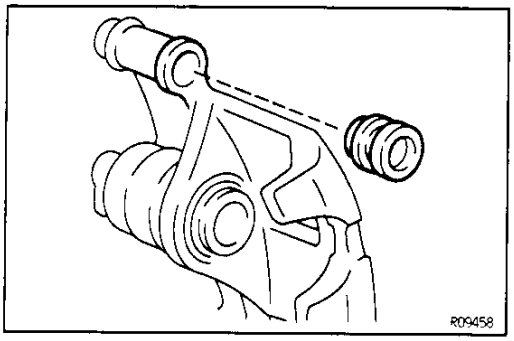

4. **INSTALL MAIN PIN BOOT**

BR

Downloaded from www.Manualslib.com manuals search engine

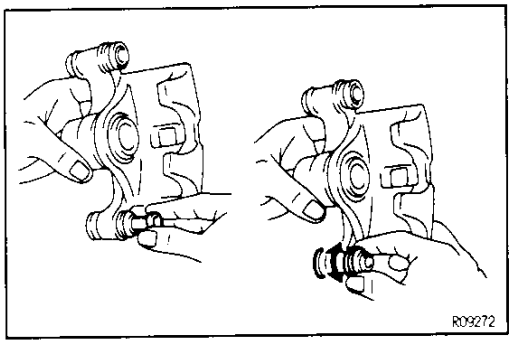

5. INSTALL SLIDING BUSHING AND DUST BOOTS
Install 2 new boots and the sliding bushing.

CALIPER INSTALLATION

BR04D-08

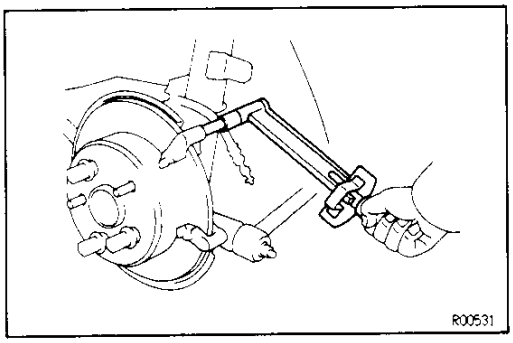

1. INSTALL MAIN PIN
Install the main pin and torque the main pin installation bolt.
Torque: 27 N·m (270 kgf·cm, 19 ft·lbf)

BR

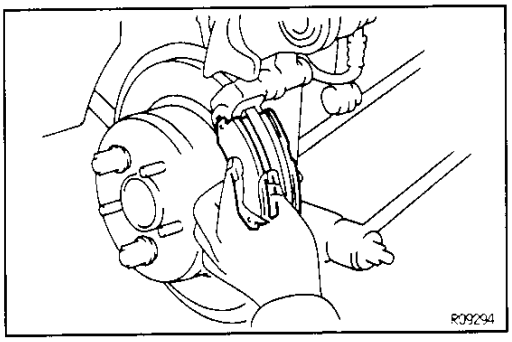

2. INSTALL 2 PADS
Install pads with the pad wear indicator plate facing downward.
NOTICE: There should be no oil or grease adhering to the friction surfaces of the pads or the disc.

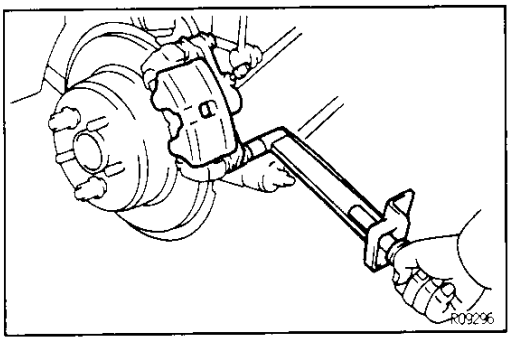

3. INSTALL CALIPER
Install the caliper and torque the installation bolt.
Torque: 20 N·m (200 kgf·cm, 14 ft·lbf)

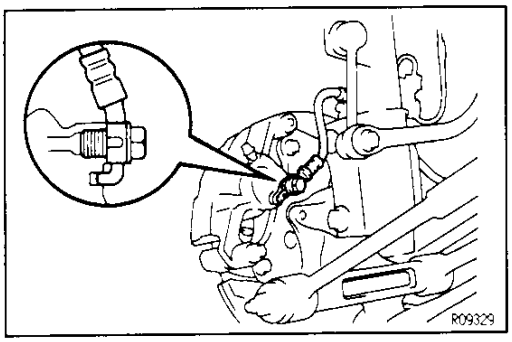

4. CONNECT FLEXIBLE HOSE
Install the flexible hose on the caliper with 2 new gaskets.
Torque: 30 N·m (310 kgf·cm, 22 ft·lbf)
HINT: Insert the flexible hose lock securely in the lock hole in the caliper.

5. FILL BRAKE RESERVOIR WITH BRAKE FLUID AND BLEED BRAKE SYSTEM (See page BR−9)

6. CHECK FOR LEAKS

Downloaded from www.Manualslib.com manuals search engine

REAR BRAKE
(Parking Brake for Rear Disc Brake)
COMPONENTS

BR04E-06

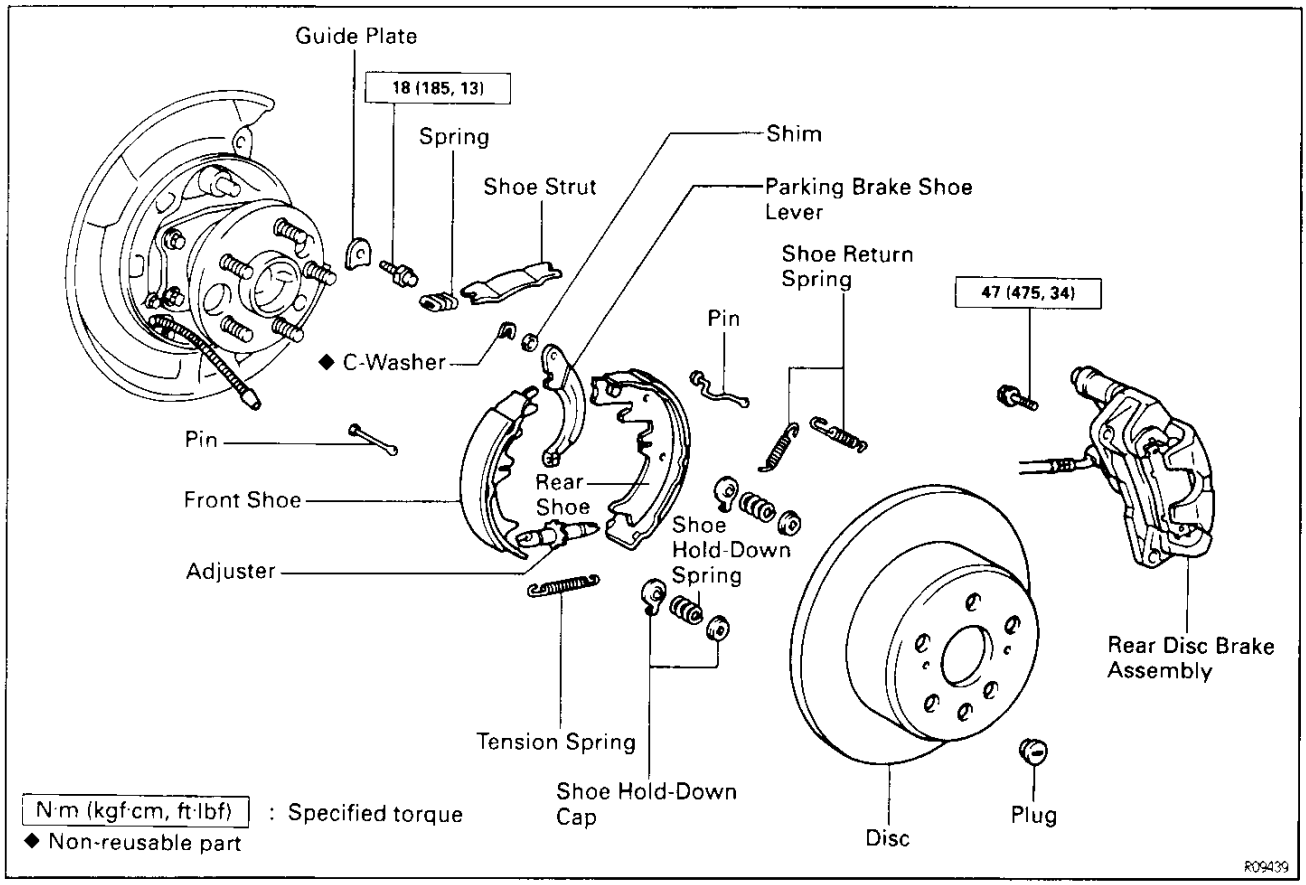

BR

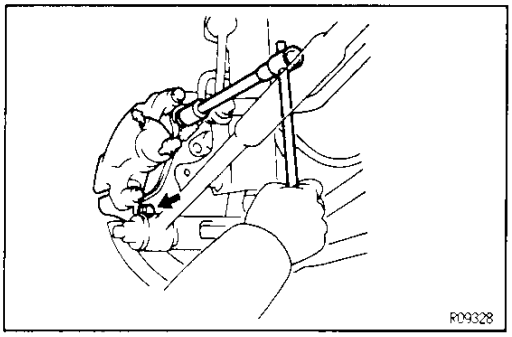

BR04F-DE

PARKING BRAKE DISASSEMBLY

1. **REMOVE REAR WHEEL**
2. **REMOVE REAR DISC BRAKE ASSEMBLY**

(a) Remove the 2 mounting bolts and remove the disc brake assembly.

(b) Suspend the disc brake securely. Ensure that the hose is not stretched.

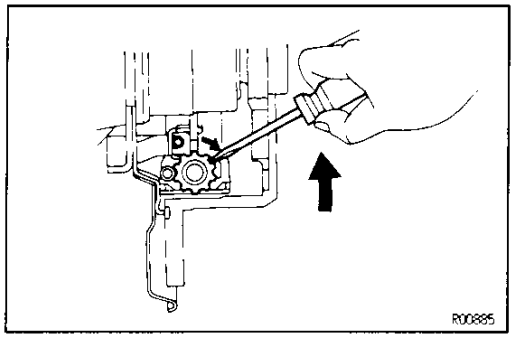

3. **REMOVE DISC**

HINT: If the disc cannot be removed easily, return the shoe adjuster until the wheel turns freely.

Downloaded from www.Manualslib.com manuals search engine

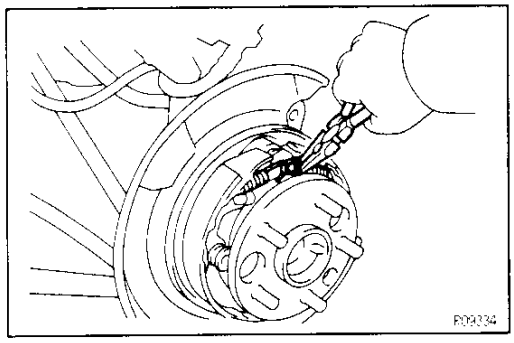

4. REMOVE SHOE RETURN SPRINGS

Using needle—nose pliers, remove the 2 shoe return springs.

5. REMOVE SHOE STRUT WITH SPRING

BR

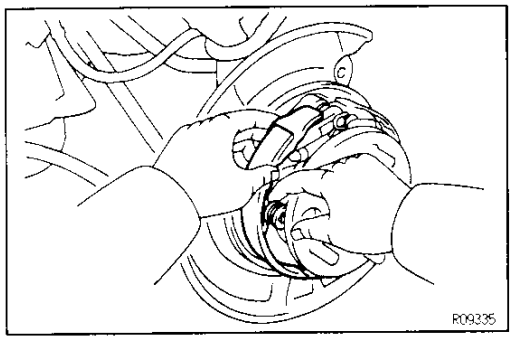

6. REMOVE FRONT SHOE AND ADJUSTER

(a) Slide out the front shoe and remove the shoe adjuster.

(b) Disconnect the tension spring and remove the front shoe.

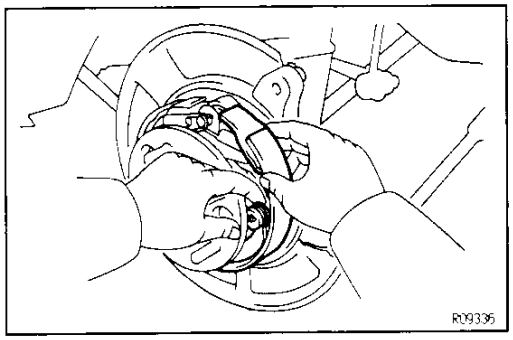

7. REMOVE REAR SHOE AND TENSION SPRING

(a) Slide out the rear shoe.

(b) Remove the tension spring from the rear shoe.

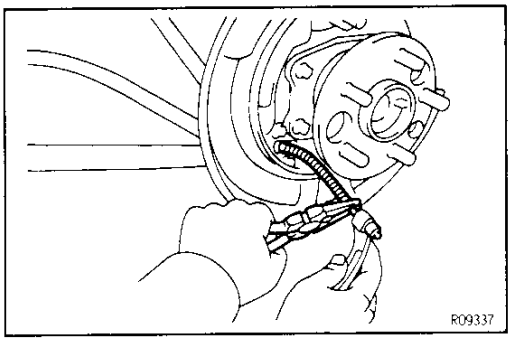

(c) Disconnect the parking brake cable from the parking brake shoe lever.

(d) Remove the shoe hold—down spring cups, springs and pins.

Downloaded from www.Manualslib.com manuals search engine

BR

PARKING BRAKE COMPONENTS INSPECTION AND REPAIR

1. **INSPECT DISASSEMBLED PARTS**
   Inspect the disassembled parts for wear, rust or damage.

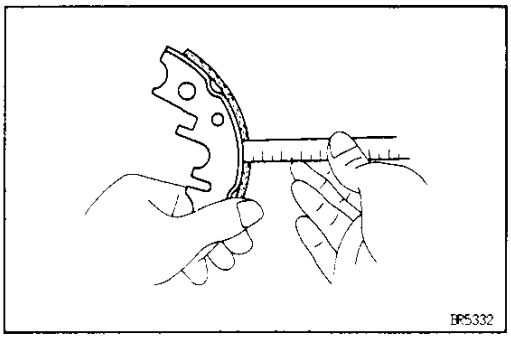

2. **MEASURE BRAKE SHOE LINING THICKNESS**
   Using a scale, measure the thickness of the shoe lining.
   Standard thickness:
   2.0 mm (0.079 in.)
   Minimum thickness:
   1.0 mm (0.039 in.)
   If the lining thickness is at the minimum thickness or less, or if there is uneven wear, replace the brake shoe.

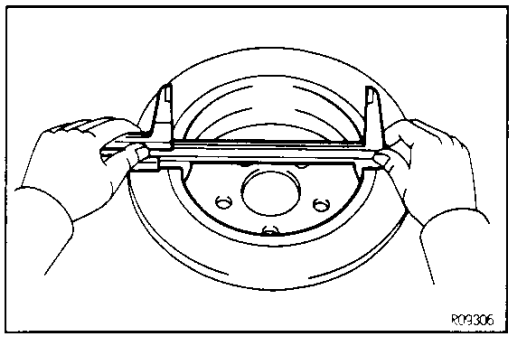

3. **MEASURE DISC INSIDE DIAMETER**
   Using a vernier caliper, measure the inside diameter of the disc.
   Standard inside diameter:
   170.0 mm (6.69 in.)
   Maximum inside diameter:
   171.0 mm (6.73 in.)
   Replace the disc if the inside diameter is at the maximum value or more. Replace the disc or grind it with a lathe if the disc is scored or is worn unevenly.

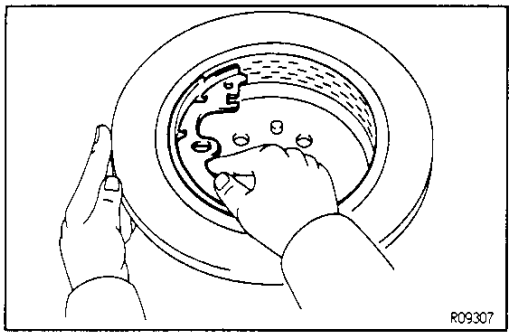

4. **INSPECT PARKING BRAKE LINING AND DISC FOR PROPER CONTACT**
   Apply chalk to the inside surface of the disc, then grind down the brake shoe lining to fit. If the contact between the disc and the brake shoe lining is improper, repair it using a brake shoe grinder or replace the brake shoe assembly.

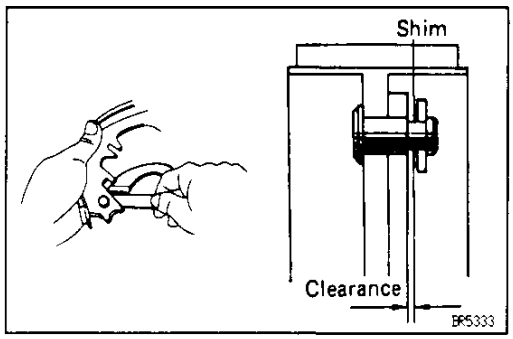

5. **MEASURE CLEARANCE BETWEEN PARKING BRAKE SHOE AND LEVER**
   Using a feeler gauge, measure the clearance.
   Standard clearance:
   Less than 0.35 mm (0.0138 in.)
   If the clearance is not within the specification, replace the shim with one of the correct size.

Downloaded from www.Manualslib.com manuals search engine

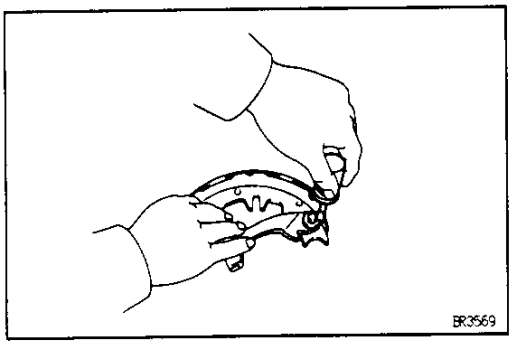

Thickness mm(in.)	Thickness mm(in.)
0.3 (0.012)	0.9 (0.035)
0.6 (0.024)	

6. IF NECESSARY, REPLACE SHIM

(a) Remove the parking brake shoe lever, and install the correct size shim.

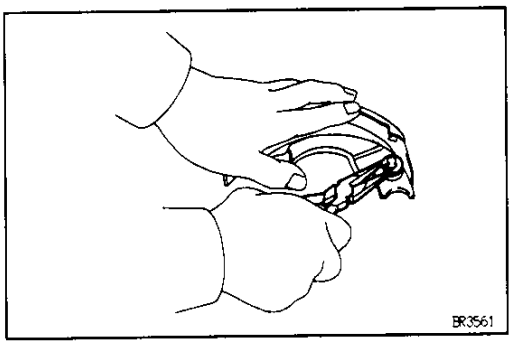

(b) Install the parking brake shoe lever with a new C–washer.

(c) Remeasure the clearance.

BR

Downloaded from www.Manualslib.com manuals search engine

BR04H-06

PARKING BRAKE ASSEMBLY

HINT: Assemble the parts in the correct direction, as shown.

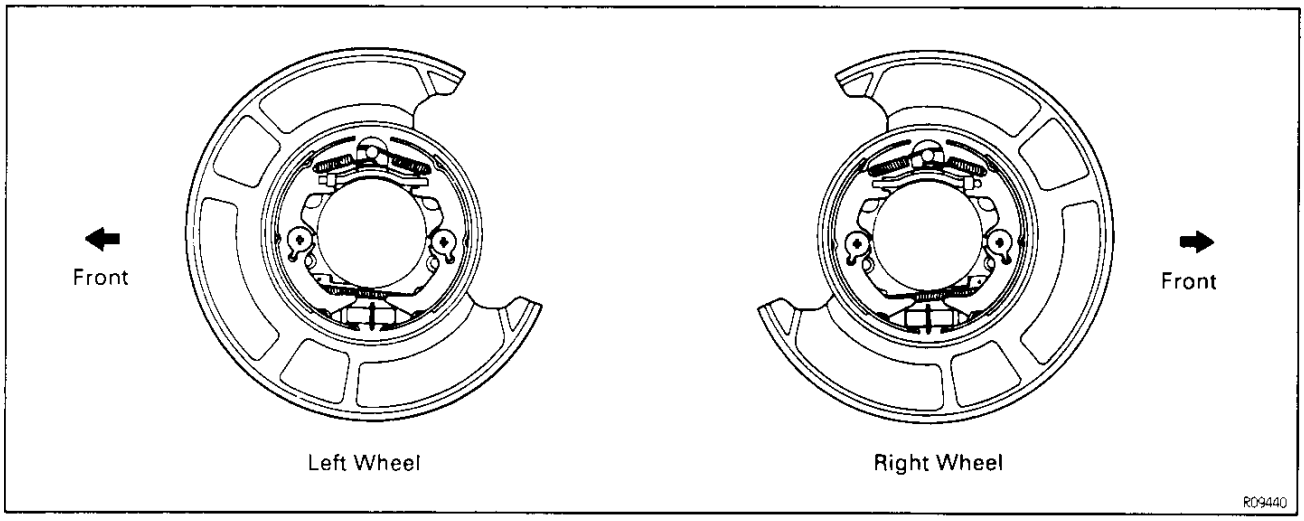

BR

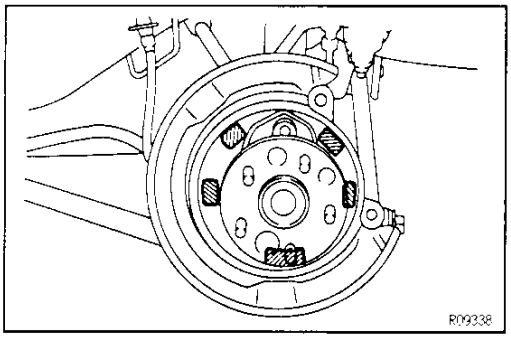

1. **APPLY HIGH TEMPERATURE GREASE ON BACKING PLATE**
   Apply high temperature grease to the sliding surfaces shaded of the shoe.

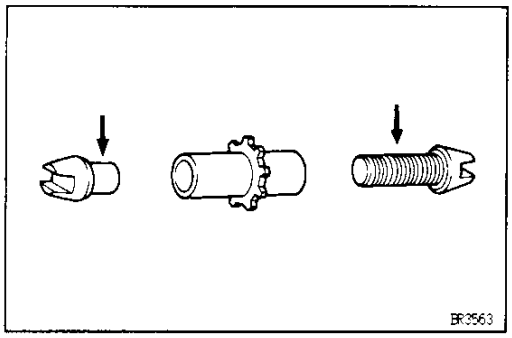

2. **APPLY HIGH TEMPERATURE GREASE TO ADJUSTER**

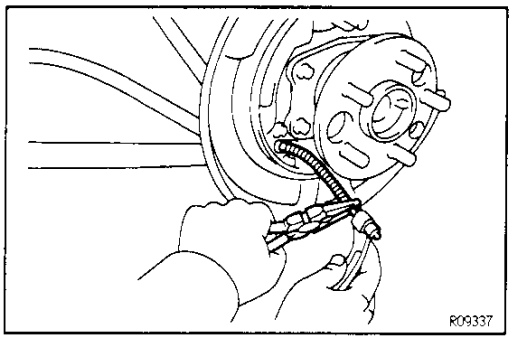

3. **CONNECT PARKING BRAKE CABLE TO PARKING BRAKE LEVER**
   (a) Install the shoe hold—down springs, cups and pins.
   (b) Connect the parking brake cable to the parking brake shoe lever of the rear shoe.

Downloaded from www.Manualslib.com manuals search engine

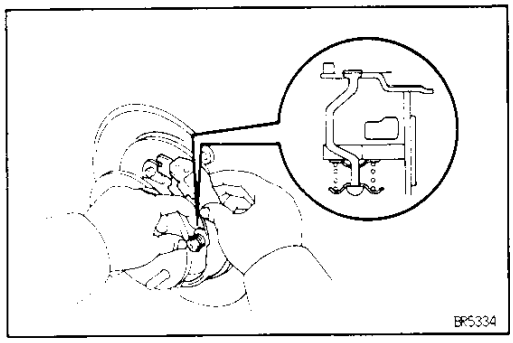

4. INSTALL REAR SHOE

Slide in the rear shoe between the shoe hold—down spring cup and the backing plate.

NOTICE: Do not allow oil or grease to get on the rubbing face.

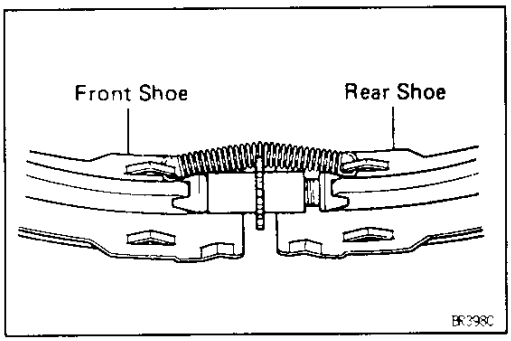

5. INSTALL TENSION SPRING, FRONT SHOE AND ADJUSTER

(a) Install the tension spring on the rear shoe.

(b) Install the front shoe on the tension spring.

(c) Install the adjuster between the front and rear shoes.

BR

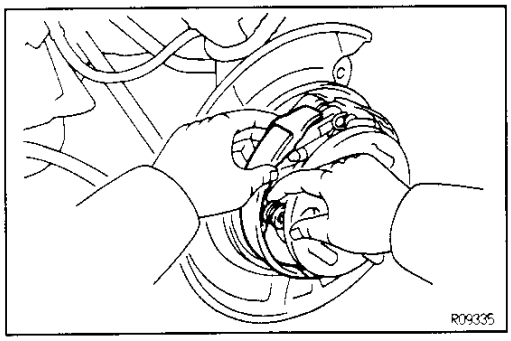

(d) Slide in the front shoe between the shoe hold—down spring cup and the backing plate.

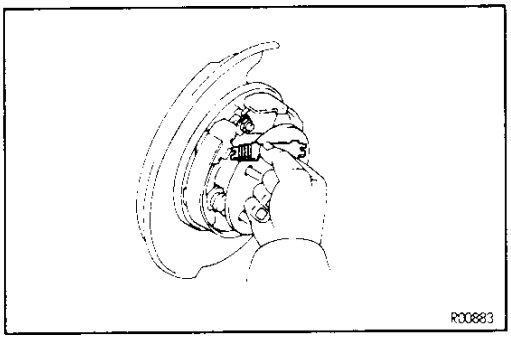

6. INSTALL STRUT WITH SPRING

Install the strut with the spring forward.

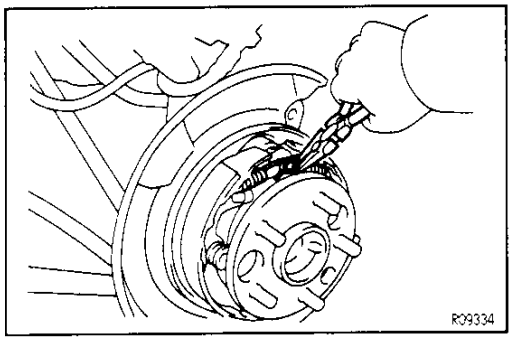

7. INSTALL SHOE RETURN SPRINGS

Using needle—nose pliers, install the shoe return springs.

Downloaded from www.Manualslib.com manuals search engine

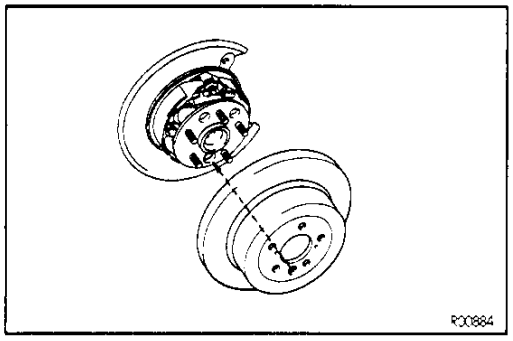

8. INSTALL DISC

(a) Before installing, polish the disc and shoe surfaces with sandpaper.

(b) Align the hole on the rear axle hub and service hole on the disc.

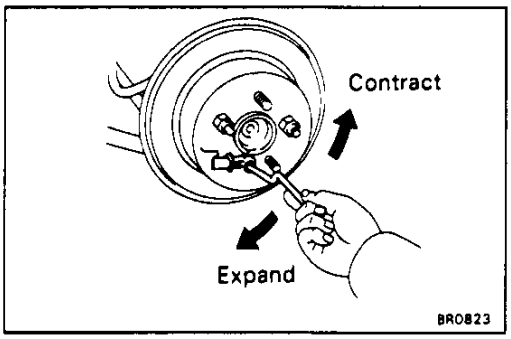

9. ADJUST PARKING BRAKE SHOE CLEARANCE

(a) Temporarily install the hub nuts.

(b) Remove the hole plug.

(c) Turn the adjuster and expand the shoes until the disc locks.

(d) Return the adjuster 8 notches.

(e) Install the hole plug.

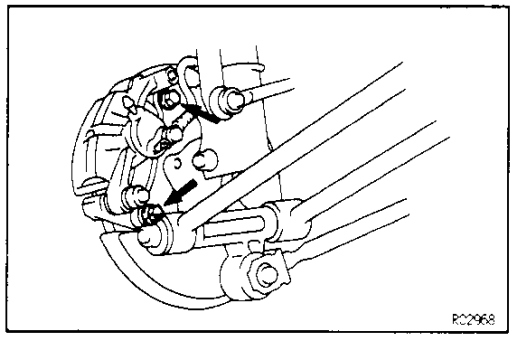

10. INSTALL REAR DISC BRAKE ASSEMBLY

Install the disc brake assembly and torque the 2 mounting bolts.

Torque: 47 N·m (475 kgf·cm, 34 ft·lbf)

11. INSTALL REAR WHEEL

12. SETTLING PARKING BRAKE SHOES AND DISC

(a) Drive the vehicle at about 50 km/h (31 mph) on a safe, level and dry road.

(b) With the parking brake release button pushed in, pull on the lever with 98 N (10 kgf, 19.8 lbf) of force.

(c) Drive the vehicle for about 400 meters (0.25 mile) in this condition.

(d) Repeat this procedure 2 or 3 times.

13. CHECK AND ADJUST PARKING BRAKE LEVER TRAVEL

(See page BR—10)

Downloaded from www.Manualslib.com manuals search engine

PROPORTIONING VALVE (P VALVE)

FLUID PRESSURE CHECK

1. **INSTALL LSPV GAUGE (SST)**
   SST 09709–29017

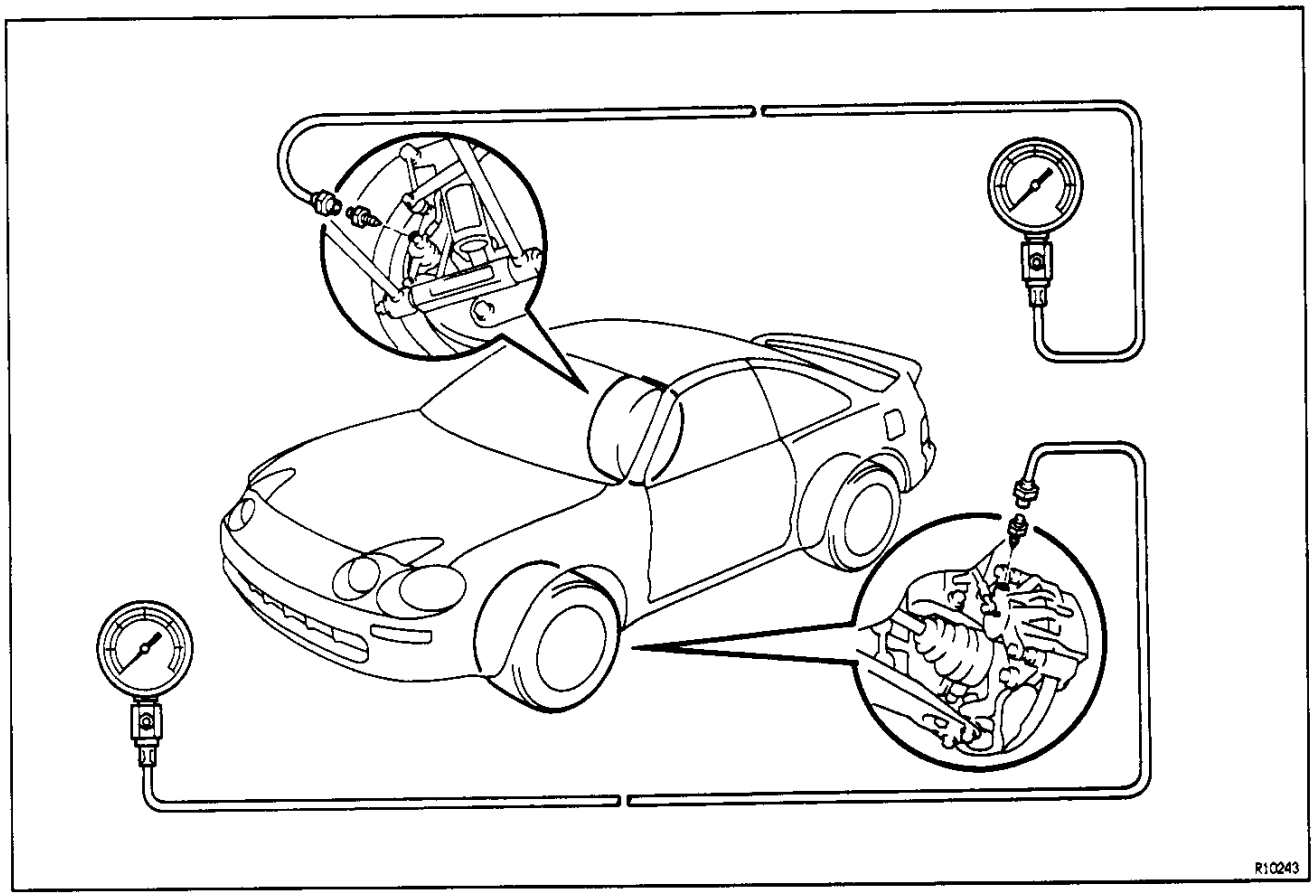

2. **BLEED AIR FROM FLUID PRESSURE GAUGE**
3. **RAISE MASTER CYLINDER PRESSURE AND CHECK REAR WHEEL CYLINDER PRESSURE**
   7A–FE Engine:

Master cylinder pressure	Rear wheel cylinder pressure
2,452 kPa (25 kgf/cm², 356 psi)	2,452 kPa (25 kgf/cm², 356 psi)
7,845 kPa (80 kgf/cm², 1,138 psi)	5,374 kPa (54.8 kgf/cm², 779 psi)

Downloaded from www.Manualslib.com manuals search engine

3S–FE Engine: (LHD)

Master cylinder pressure	Rear wheel cylinder pressure
2,452 kPa (25 kgf/cm², 356 psi)	2,452 kPa (25 kgf/cm², 356 psi)
7,845 kPa (80 kgf/cm², 1,138 psi)	5,374 kPa (54.8 kgf/cm², 779 psi)

3S–FE Engine: (RHD)

Master cylinder pressure	Rear wheel cylinder pressure
2,452 kPa (25 kgf/cm², 356 psi)	2,452 kPa (25 kgf/cm², 356 psi)
7,845 kPa (80 kgf/cm², 1,138 psi)	4,447 kPa (45.35 kgf/cm², 645 psi)

5S–FE Engine:

Master cylinder pressure	Rear wheel cylinder pressure
2,452 kPa (25 kgf/cm², 356 psi)	2,452 kPa (25 kgf/cm², 356 psi)
7,845 kPa (80 kgf/cm², 1,138 psi)	4,447 kPa (45.35 kgf/cm², 645 psi)

3S–GE Engine:

Master cylinder pressure	Rear wheel cylinder pressure
2,942 kPa (30 kgf/cm², 427 psi)	2,942 kPa (30 kgf/cm², 427 psi)
7,845 kPa (80 kgf/cm², 1,138 psi)	4,447 kPa (45.35 kgf/cm², 645 psi)

BR

When inspecting the fluid pressure, inspect the left front and right rear together, and the right front and left rear together.

If the rear wheel cylinder pressure is incorrect, replace the P valve assembly.

4. **BLEED BRAKE SYSTEM**
5. **CHECK FOR LEAKS**

Downloaded from www.Manualslib.com manuals search engine

ANTI—LOCK BRAKE SYSTEM (ABS)

DESCRIPTION

BRGG9-04

- This ABS is a brake system which controls the brake cylinder hydraulic pressure of all 4 wheels during sudden braking and braking on slippery road surfaces, preventing the wheels from locking. This ABS provides the following benefits:
  (1) Enables steering round an obstacle with a greater degree of certainty even when panic braking.
  (2) Enables stopping in a panic brake while keeping the effect upon stability and steerability to a minimum, even on curves.
- The function of the ABS is to help maintain directional stability and vehicle steerability on most road conditions. However, the system cannot prevent the vehicle from skidding if the cornering speed limit is exceeded.
- The ABS has a deceleration sensor for super strut type front suspension model.
- In case a malfunction occurs, a diagnosis function and fail—safe system have been adopted for the ABS to increase serviceability.

Downloaded from www.Manualslib.com manuals search engine

BR02K—06

COMPONENTS FUNCTION

Component	Function
Front Speed Sensor	Detect the wheel speed of each of the left and right front wheels.
Rear Speed Sensor	Detect the wheel speed of each of the left and right rear wheels.
ABS Warning Light	Lights up to alert the driver when trouble has occurred in the Anti—Lock Brake System.
Actuator	Controls the brake fluid pressure to each disc brake cylinder through signals from the ECU.
ABS ECU	From the wheel speed signals from each sensor, it calculates acceleration, deceleration and slip values and sends signals to the actuator to control brake fluid pressure.
* Deceleration Sensor	Detect the longitudinal and lateral deceleration value of the vehicle and sends a signal accordingly to the ABS ECU.

* For Super Strut Type Suspension Model

BR0BL—06

SYSTEM PARTS LOCATION

BR

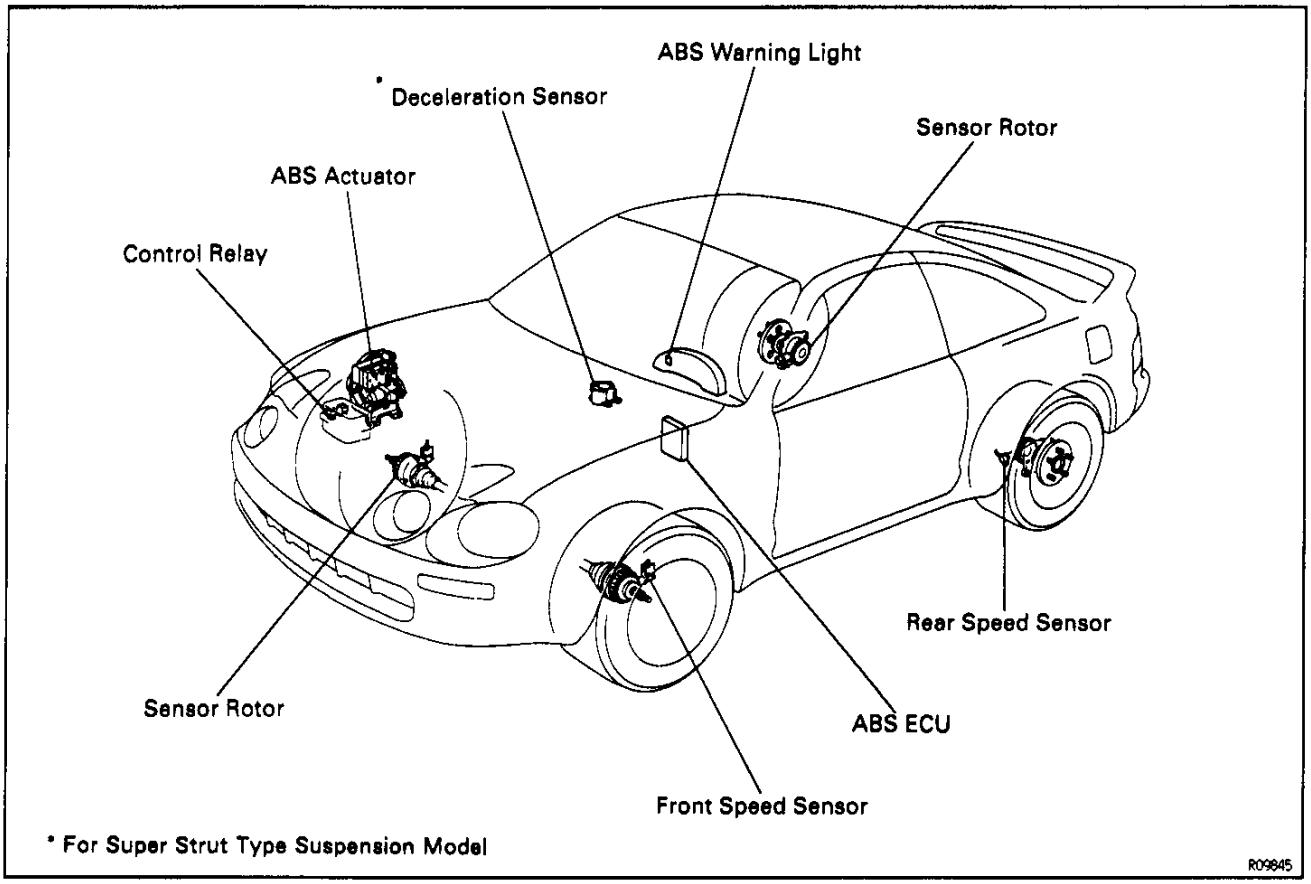

Downloaded from www.Manualslib.com manuals search engine

BR03M-00

WIRING DIAGRAM

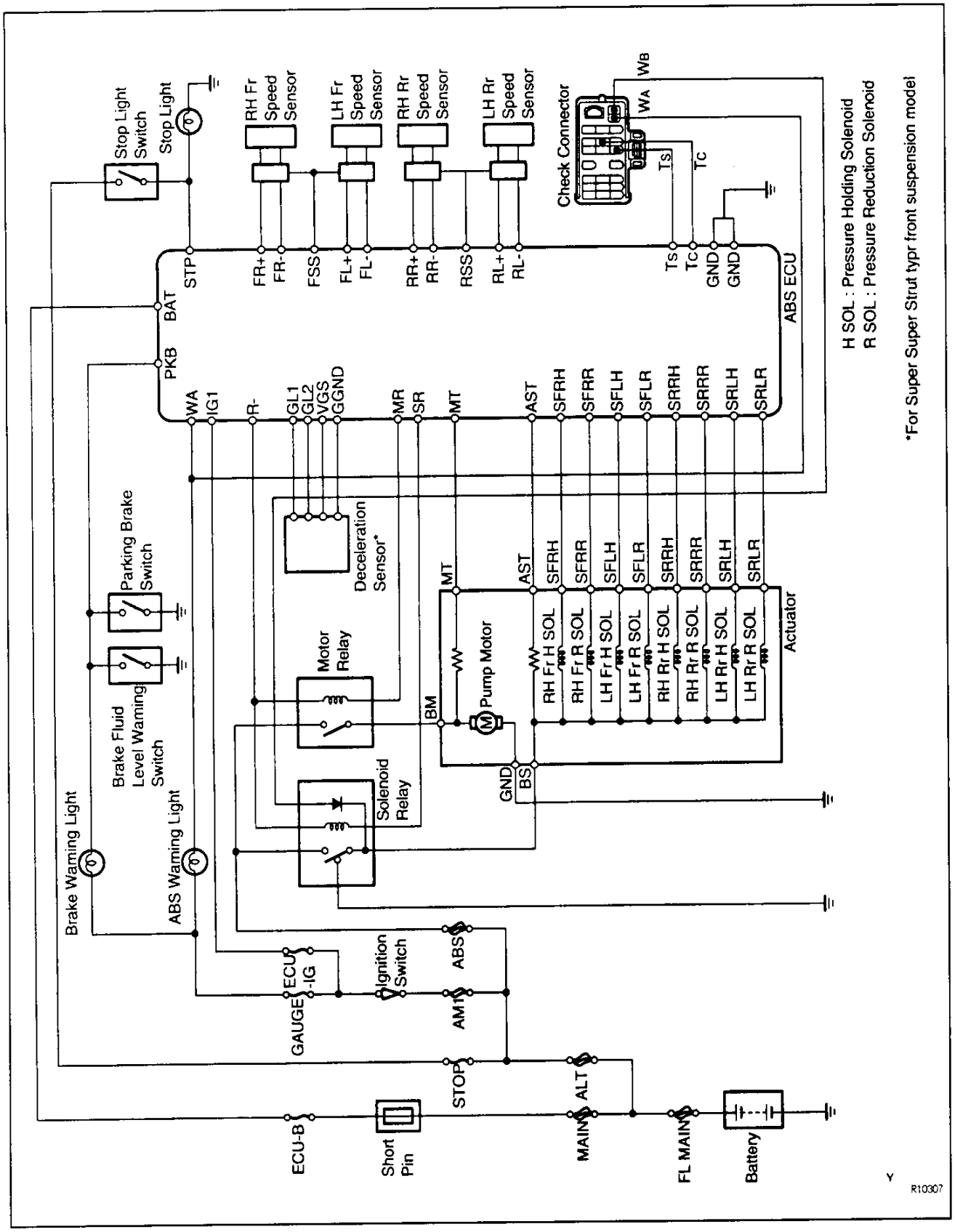

BR

Downloaded from www.Manualslib.com manuals search engine

BR02N-06

CONNECTORS

ABS Actuator

CONNECTOR A

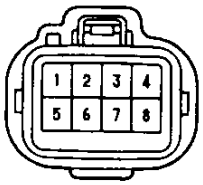

CONNECTOR B

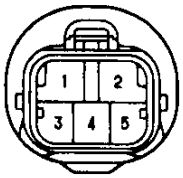

ABS Relay (R/B No.5)

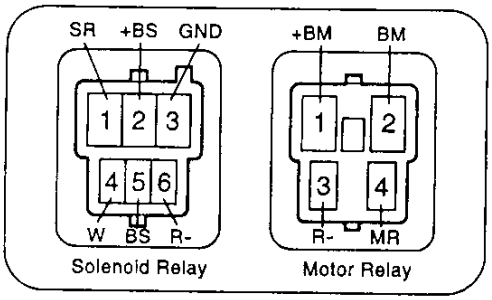

Front Speed Sensor (LH)

Front Speed Sensor (RH)

DECELERATION SENSOR

Rear Speed Sensor (LH)

Rear Speed Sensor (RH)

ABS ECU

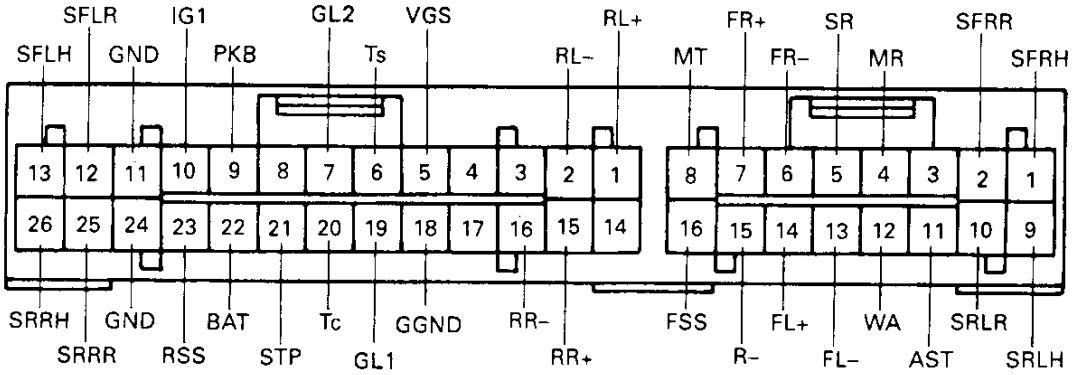

Ie-8-1 Ieg-5-1-B R10367
Ie-2-1-T Ie-2-1-T Ih-5-1
e-2-2-A e-2-2-R
R09042

Z12222

BR

Downloaded from www.Manualslib.com manuals search engine

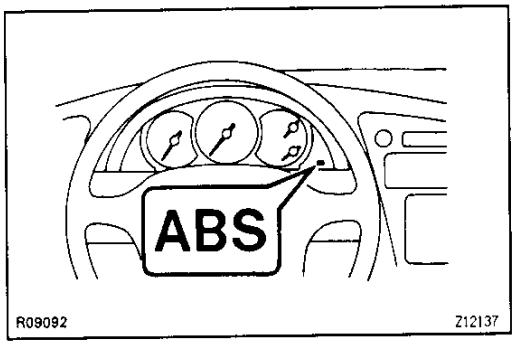

DIAGNOSIS SYSTEM

BR02P-0C

DESCRIPTION

If a malfunction occurs, the system will identify the problem and the ECU will store the codes for the trouble items.
At the same time, the system informs the driver of a malfunction via the "ABS" warning light in the combination meter.
By turning on the ignition switch, disconnecting the short pin of the check connector 1 and use SST to connect Tc and E_1 of the check connector, the trouble can be identified by the number of blinks (diagnostic trouble code) of the warning light.
In the event of two or more codes, that having the smallest numbered code will be identified first.
HINT: The warning light does not show the diagnostic trouble codes while the vehicle is running.

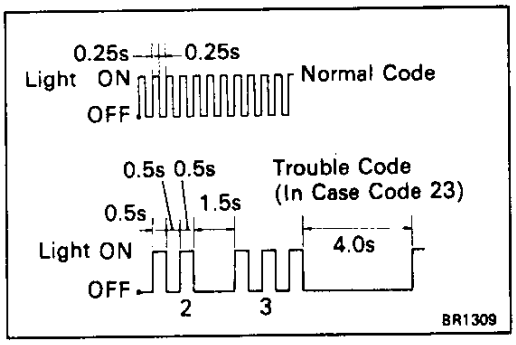

BR

BR0RD-01

DIAGNOSIS SYSTEM INSPECTION

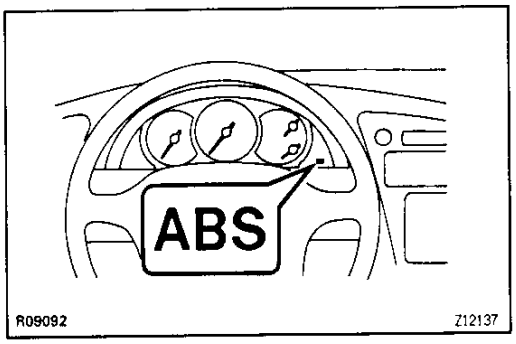

1. **INSPECT BATTERY VOLTAGE**
   Inspect that the battery voltage is 10—14 V.
2. **CHECK THAT WARNING LIGHT TURNS ON**
   (a) Turn the ignition switch ON.
   (b) Check that the "ABS" warning light turns on for 3 seconds.
   If not, inspect and repair or replace the fuse, bulb and wire harness.
3. **READ DIAGNOSTIC TROUBLE CODE**
   (a) Using SST, connect terminals Tc and E_1 of the check connector.
   SST 09843—18020
   (b) Pull out the short pin from the terminals WA and WB of the check connector.
   (c) Turn the ignition switch ON.

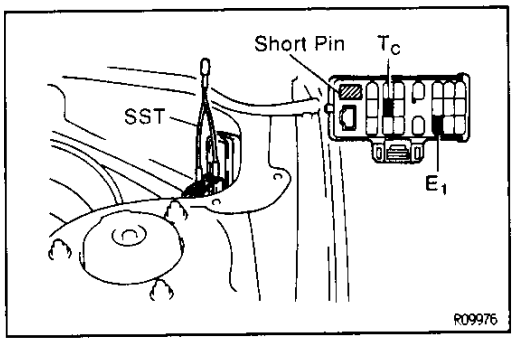

(d) In event of a malfunction, 4 seconds later the warning light will begin to blink. Read the number of blinks. (See page BR—75)

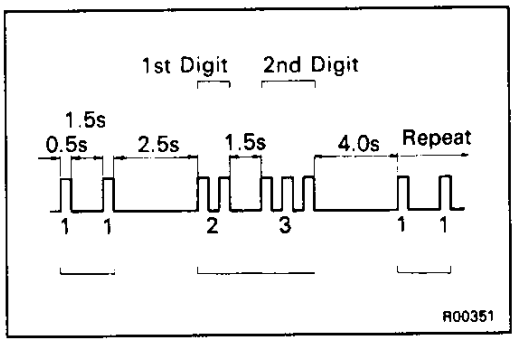

Downloaded from www.Manualslib.com manuals search engine

HINT: The first number of blinks will equal the first digit of a 2 digit diagnostic trouble code. After a 1.5 second pause, the 2nd number of blinks will equal the 2nd number of a 2 digit code. If there are 2 or more codes, there will be a 2.5 second pause between each. Indication will start from the smallest and finish at the largest numbered code. This sequence will be repeated after a 4 seconds pause.

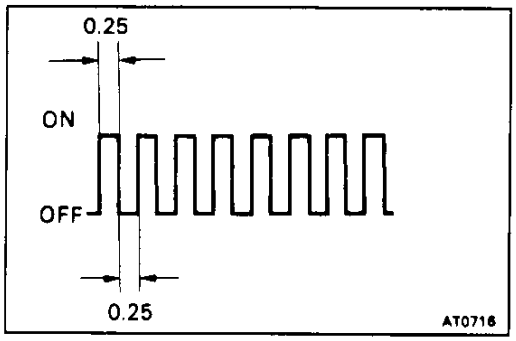

BR

(e) If the system is operating normally (no malfunction), the warning light will blink once every 0.5 seconds.

(f) Repair the system.

(g) After the malfunctioning components has been repaired, clear the diagnostic trouble codes stored in the ECU.
(See page BR—76)
HINT: If you disconnect the battery cable while repairing, all diagnostic trouble codes in the ECU will erased.

(h) Remove the SST from terminals Tc and E_1 of the check connector.
SST 09843—18020

(i) Install the short pin to the terminals WA and WB.

(j) Turn the ignition switch on, and check that the "ABS" warning light goes off after the warning light goes on for 3 seconds.

Downloaded from www.Manualslib.com manuals search engine

DIAGNOSTIC TROUBLE CODE

Code No.	Light Pattern	Diagnosis	Trouble Part
11	ON / OFF BE3931	Open circuit in solenoid relay circuit	• Actuator inside wire harness • Solenoid relay • Wire harness and connector of solenoid relay circuit
12	BE3931	Short circuit in solenoid relay circuit	
13	BE3931	Open circuit in pump motor relay circuit	• Actuator inside wire harness • Motor relay • Wire harness and connector of pump motor relay circuit
14	BE3931	Short circuit in pump motor relay circuit	
21	BE3932	Open or short circuit in solenoid of right front wheel	• Actuator solenoid • Wire harness and connector of actuator solenoid circuit
22	BE3932	Open or short circuit in solenoid of left front wheel	
23	BE3932	Open or short circuit in solenoid of right rear wheel	
24	BE3932	Open or short circuit in solenoid of left rear wheel	
31	BE3933	Right front wheel speed sensor signal malfunction	• Speed sensor • Sensor rotor • Wire harness and connector of speed sensor
32	BE3933	Left front wheel speed sensor signal malfunction	
33	BE3933	Right rear wheel speed sensor signal malfunction	
34	BE3933	Left rear wheel speed sensor signal malfunction	
35	BE3933	Open circuit in left front or rear right wheel speed sensor	
36	BE3933	Open circuit in right front or rear left wheel speed sensor	
37	BR3933	Faulty rear speed sensor rotor	• Rear sensor rotors
41	BE3934	Abnormal battery voltage (less than 9.5 V/more than 16.2 V)	• Battery • Voltage regulator
43	BE3934	Deceleration sensor signal malfunction (constant output)	• Deceleration sensor • Wire harness and connector of deceleration sensor circuit
44	BE3934	Open or short circuit in deceleration sensor	
45	BE3934	Deceleration sensor signal malfunction	
51	BE3935	Actuator pump motor locked or open circuit in pump motor	• Pump motor, relay and battery • Wire harness, connector and ground bolt or actuator pump motor circuit
Always on		Malfunction in ECU	• ECU

V05353

Downloaded from www.Manualslib.com manuals search engine

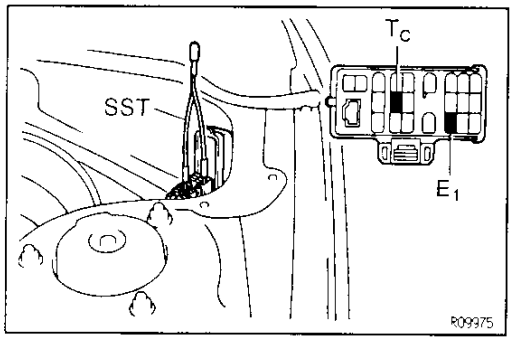

DIAGNOSTIC TROUBLE CODES CLEARING

BROPE–02

CLEAR DIAGNOSTIC TROUBLE CODES

(a) Turn the ignition switch ON.
HINT: Keep the vehicle stationary.

(b) Using SST, connect terminals Tc and E_1 of the check connector.
SST 09843–18020

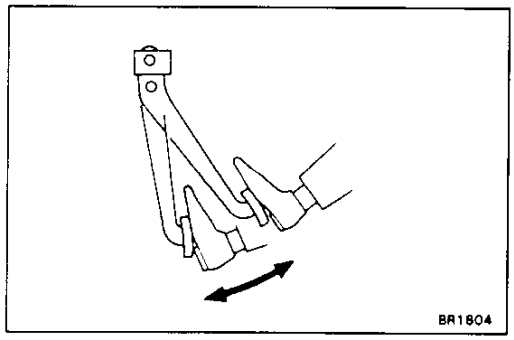

(c) Clear the diagnostic trouble codes stored in ECU by depressing the brake pedal 8 or more times within 3 seconds.

BR

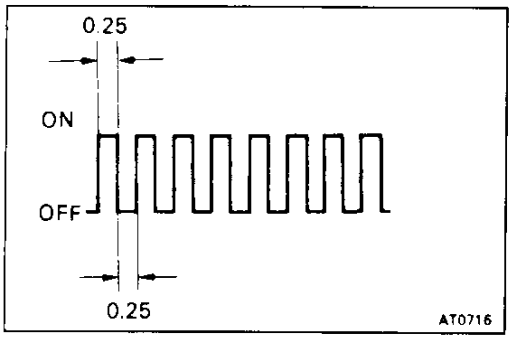

(d) Check that the warning light shows the normal code.

(e) Remove the SST from terminals Tc and E_1 of the check connector.
SST 09843–18020

(f) Check that the warning light goes off.
HINT: Cancellation can also be done by removing the ECU–B fuse, but in this case, other memory systems will also be cancelled out.

Downloaded from www.Manualslib.com manuals search engine

BRORE-01

TROUBLESHOOTING

Problem		No.
"ABS"warning light	Always comes on after ignition switched ON.	1
	Does not come on for 3 seconds after ignition switched ON.	2
	Goes on and off.	3
	Comes on while running.	1
Brake condition	Brakes pull. ※	4
	Braking inefficient. ※	4
	ABS operates during normal braking.	4
	ABS operates just before stopping during normal braking.	4
	Brake pedal pulsates abnormally while ABS is operating.	4
	Skidding noise occurs while ABS operating. (ABS operates inefficiently)	5

※ Also check the parts of the brake system (brake cylinders, pads, hydraulic lines, etc.) not specifically part of the ABS.

V05327

Downloaded from www.Manualslib.com manuals search engine

1	"ABS" warning light comes ON.

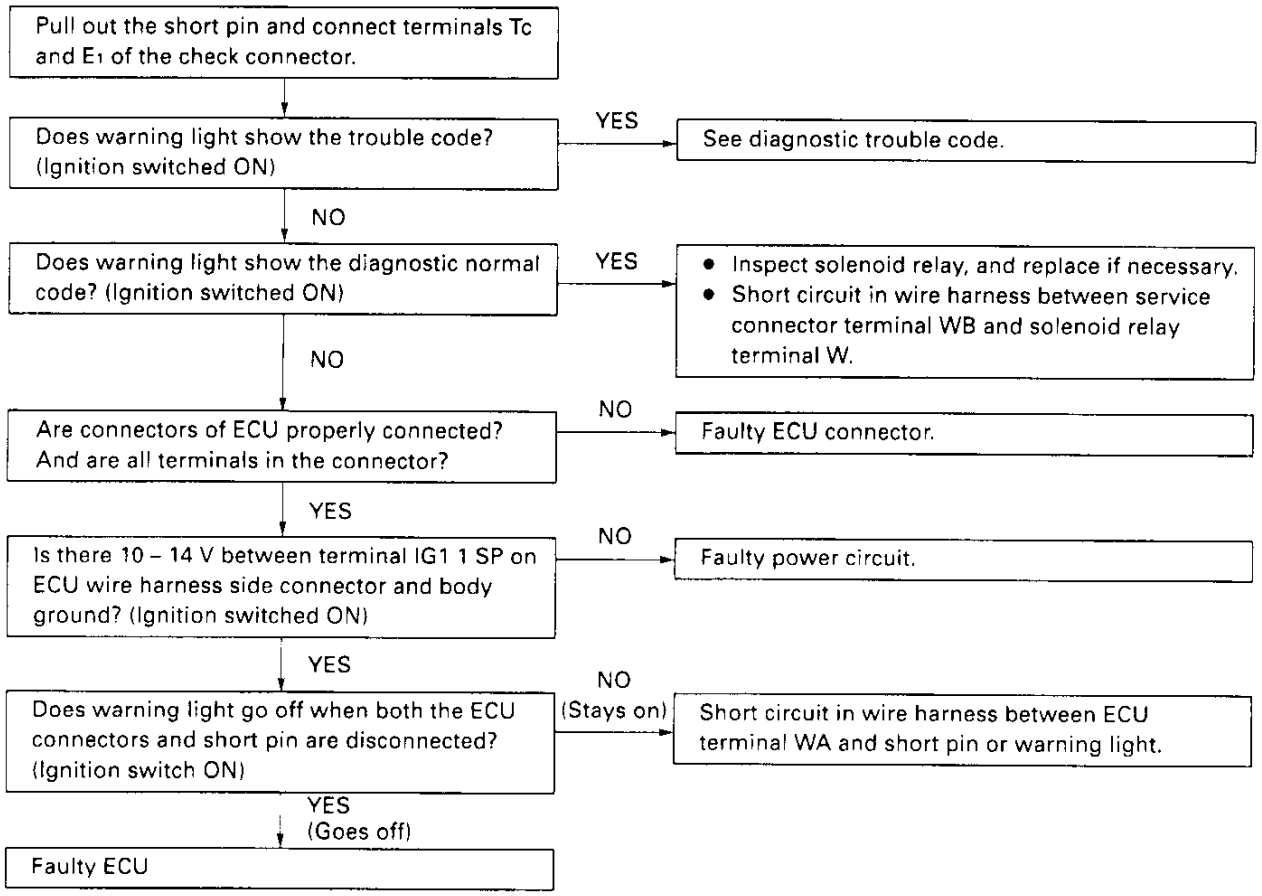

V05321

BR

Downloaded from www.Manualslib.com manuals search engine

2	"ABS" warning light does not come on for 3 seconds after ignition switched ON.

Pull out the short pin and ground the terminal WA of the check connector. (Ignition switched ON)

↓

Does warning light come on?

- NO → Bulb burned out or open circuit in wire harness between warning light and GAUGE fuse.
- YES ↓

Disconnect connectors from ECU and ground terminal WA of ECU wire harness side connector. (Ignition switched ON)

↓

Does warning light come on?

- NO → Open circuit in wire harness between ECU terminal WA and warning light.
- YES ↓

With ignition switch off, disconnect control relay connectors, and check continuity between terminals WB and GND on solenoid relay.

↓

Reverse tester leads and check again. Is there one way continuity between terminals?

- NO → Short circuit in solenoid relay inside diode.
- YES ↓

Faulty ECU

HINT: If the diode is short-circuited, a malfunction at ECU terminal WA will occur. When inspecting the terminal, connect the ECU connector, and pull out the short pin. Then turn the ignition switch ON, and check that the warning light goes on. If it does, the ECU terminal is OK.

BR

V05322

Downloaded from www.Manualslib.com manuals search engine

3	"ABS" warning light goes on and OFF.

- Check for short circuit in wire harness between terminal Tc or Ts and E_1 of check connector.

4	• Brakes pull. • Braking inefficient. • ABS operates during normal braking. • ABS operates just before stopping during normal braking. • Brake pedal pulsates abnormally while ABS is operating.

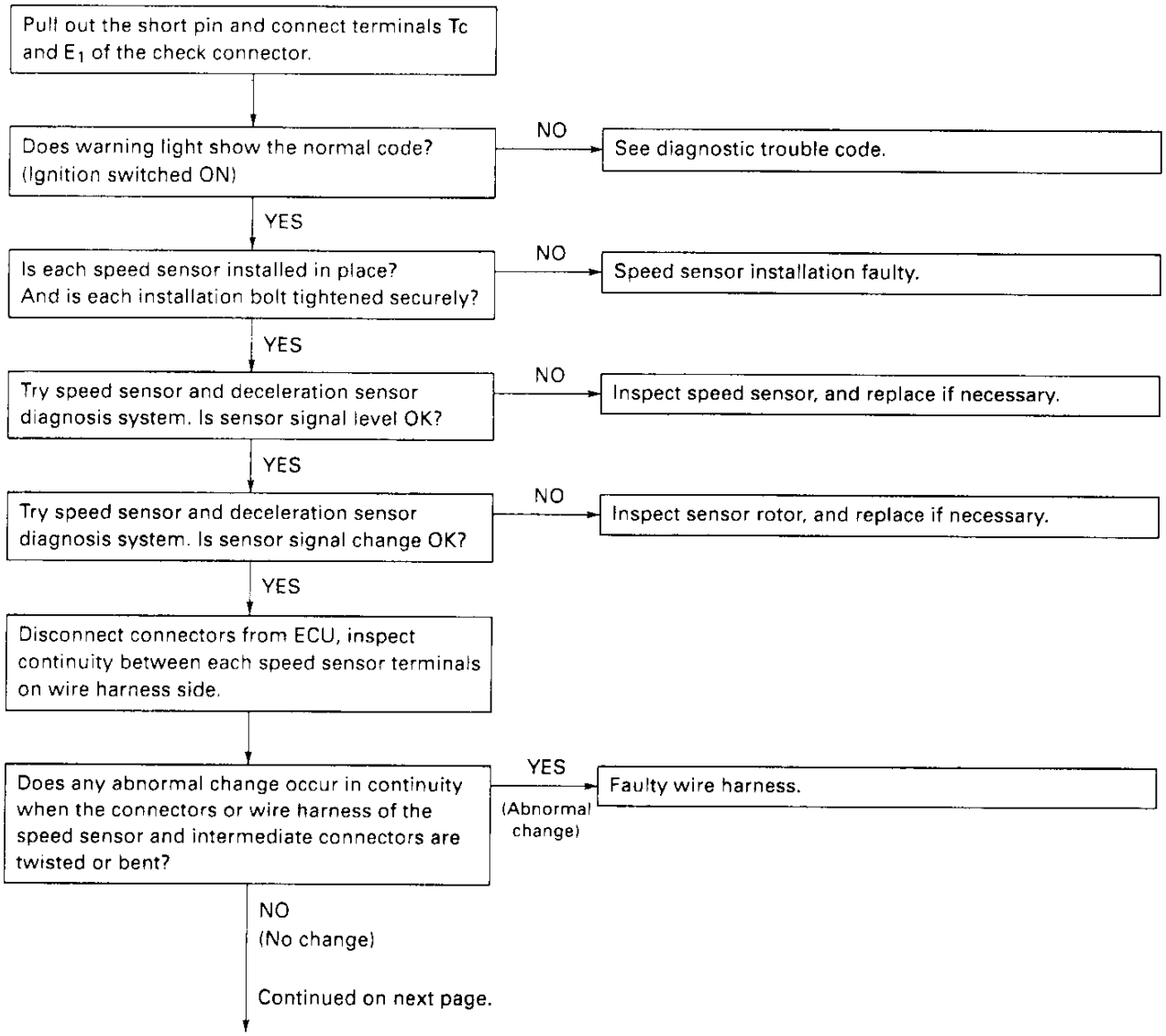

V05323

Downloaded from www.Manualslib.com manuals search engine

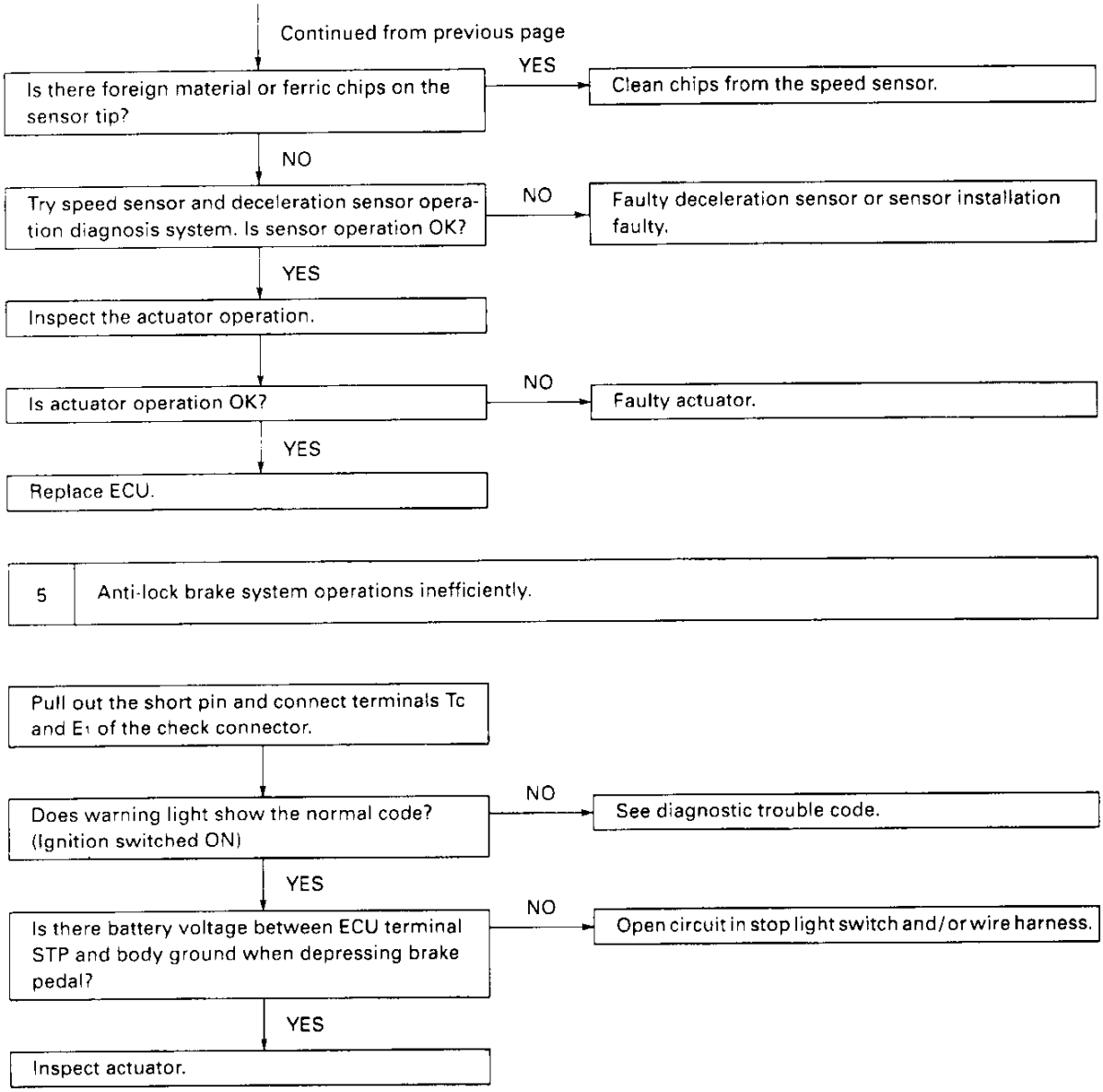

V05352

BR

Downloaded from www.Manualslib.com manuals search engine

SPEED SENSOR AND DECELERATION SENSOR DIAGNOSIS SYSTEM

BR0NF–01

DIAGNOSIS SYSTEM INSPECTION

PRECAUTION

While checking the speed sensor diagnosis system, ABS does not operate and brake system operates as normal brake system.

1. INSPECT BATTERY VOLTAGE

Inspect that the battery voltage is 10–14 V.

2. CHECK THAT WARNING LIGHT TURNS ON

(a) Turn the ignition switch ON.

(b) Check that the "ABS" warning light turns on for 3 seconds.

If not inspect and repair or replace the fuse, bulb and wire harness.

(c) Check that the "ABS" warning light turns OFF.

(d) Turn the ignition switch OFF.

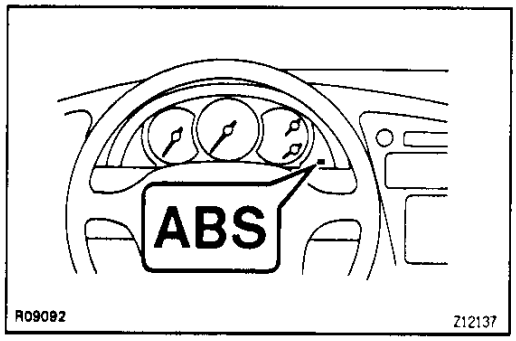

3. PERFORM FOLLOWING STEPS

(a) Using SST, connect terminals Ts and E_1 of the check connector.

SST 09843–18020

(b) Start the engine.

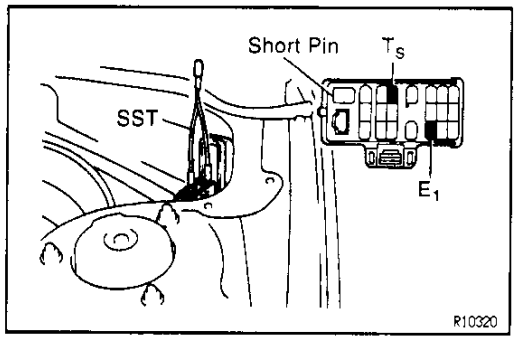

(c) Check that the warning light blinks about 4 times every 1 second, as shown.

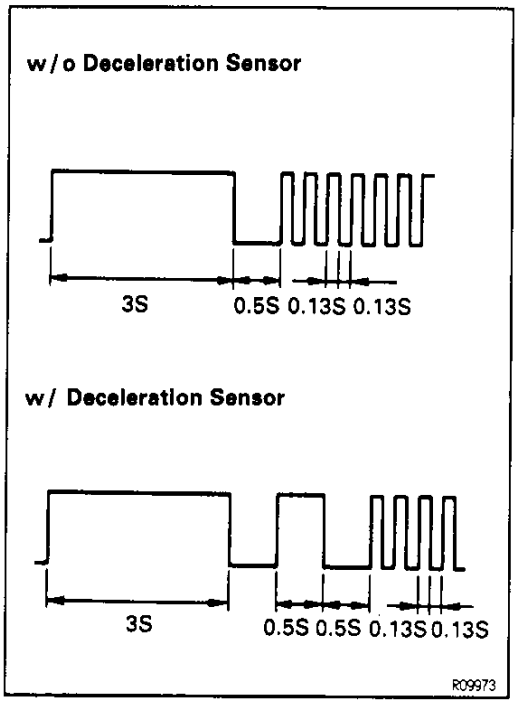

Downloaded from www.Manualslib.com manuals search engine

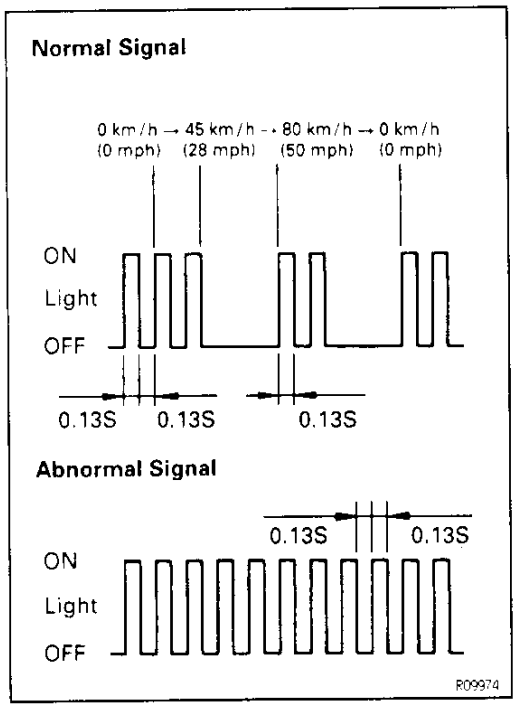

4. INSPECT DECELERATION SENSOR AND SPEED SENSOR OPERATION

(a) Stop the vehicleon a level place for 1 second or more. (Super Strut Type Suspension Model)

(b) Drive the faster than 45 km/h (28 mph) for several seconds.

(c) Check that the warning light signal turns OFF.
If the warning light signal is abnormal, perform the steps 6 and 7.
HINT:
- If the deceleration sensor operation in step 4 does not occur, an abnormal signal is output.
- The high–speed check is possible at 80 km/h (50 mph) or highter.

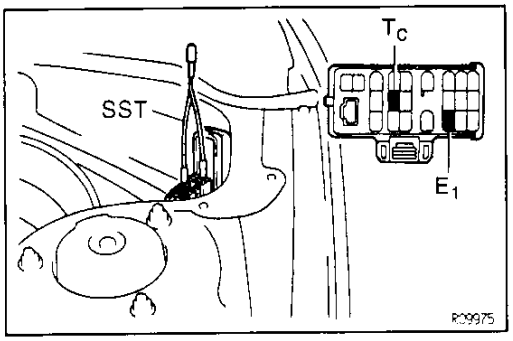

5. READ DIAGNOSTIC TROUBLE CODE

(a) Stop the vehicle and the warning light will begin to blink.

(b) Using SST, connect the terminals Tc and E_1 of check connector.

Downloaded from www.Manualslib.com manuals search engine

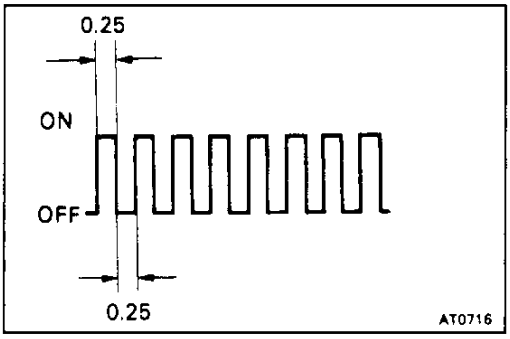

(c) Read the number of blinks of the ABS warning light. (See page BR–84)
HINT: If normal, the warning light blinks about 2 times every 1 second.
If 2 or more malfunctions are indicated at the same time, the smallest numbered code will be displayed 1st.

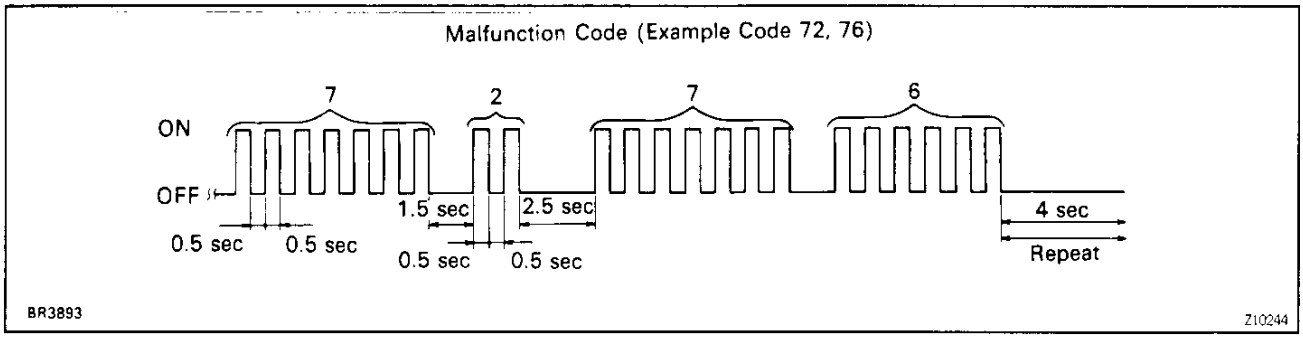

BR

6. REPAIR MALFUNCTIONING PARTS

Repair or replace the malfunctioning parts.
HINT: When repairing or replacing parts, turn the ignition switch to OFF.

7. REMOVE SST

Remove the SST from terminals Tc, Ts and E_1 of the check connector.
SST 09843–18020

Downloaded from www.Manualslib.com manuals search engine

DIAGNOSTIC TROUBLE CODE

Code No.	Light Pattern	Diagnosis	Malfunctioning Part
	ON / OFF	All speed sensors and sensor rotors are normal	
71		Low voltage of right front speed sensor signal	• Right front speed sensor • Sensor installation
72		Low voltage of left front speed sensor signal	• Left front speed sensor • Sensor installation
73		Low voltage of right rear speed sensor signal	• Right rear speed sensor • Sensor installation
74		Low voltage of left rear speed sensor signal	• Left rear speed sensor • Sensor installation
75		Abnormal change of right front speed sensor signal	• Right front sensor rotor
76		Abnormal change of left front speed sensor signal	• Left front sensor rotor
77		Abnormal change of right rear speed sensor signal	• Right rear sensor rotor
78		Abnormal change of left rear speed sensor signal	• Left rear sensor rotor
79		Deceleration sensor is faulty	• Deceleration sensor • Sensor installation

V5325

Downloaded from www.Manualslib.com manuals search engine

DECELERATION SENSOR OPERATION DIAGNOSIS SYSTEM

BR0GD-01

PRECAUTION

While checking the deceleration sensor operating diagnosis system, the Anti—lock Brake System does not work and brake system works as normal brake system.

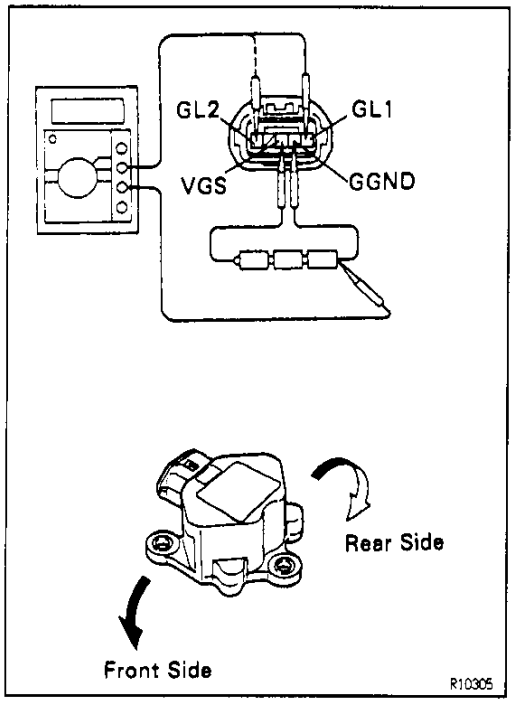

BR

DECELERATION SENSOR INSPECTION

BR0H2-01

CHECK OF DECELERATION SENSOR OUTPUT

(a) Connect 3 dry batteries of 1.5V in series.

(b) Connect VGS terminal to the batteries' positive (+) terminal, and GGND terminal to the batteries' negative (—) terminal, apply tension of about 4.5V between VGS—GGND terminals.

(c) Check the output tension of GL1 and GL2 teminals.

Symbols	Condition	Standard Value
GL1	Horizontal	about 2.3V
GL1	Lean forward	0—about 2.3V
GL1	Lean rearward	about 2.3V—4.5V
GL2	Horizontal	about 2.3V
GL2	Lean forward	about 2.3V—4.5V
GL2	Lean rearward	0—about 2.3V

HINT:

- If leaned largely, the sensor may show the wrong value.
- If dropped, the sensor should be replaced with a new one.
- The sensor removed from the vehicle should not be placed upside down.

Downloaded from www.Manualslib.com manuals search engine

ABS ACTUATOR

ABS ACTUATOR REMOVAL AND INSTALLATION

BR03C-09

Remove and install the parts, as shown.

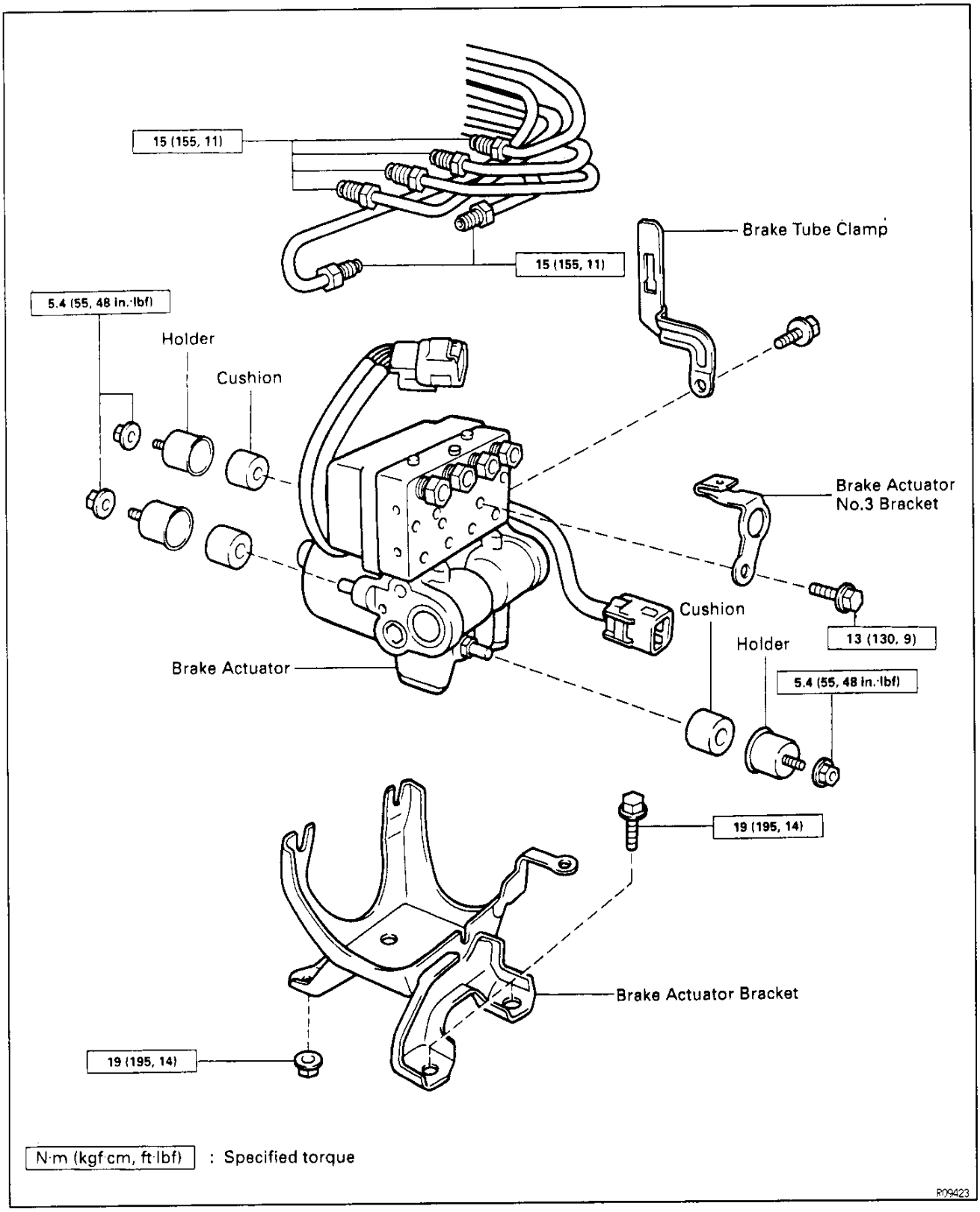

BR

Downloaded from www.Manualslib.com manuals search engine

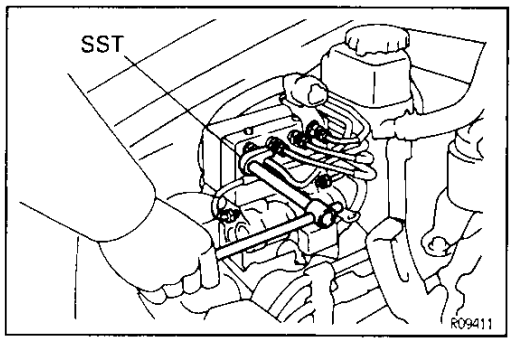

MAIN POINTS OF REMOVAL AND INSTALLATION

1. **DISCONNECT AND CONNECT BRAKE LINES**
   Using SST, disconnect and connect the brake lines from/to the ABS actuator.
   SST 09023–00100
   Torque: 15 N·m (155 kgf·cm, 11 ft·lbf)
2. **BLEED BRAKE SYSTEM**
   (See page BR–9)

BR

Downloaded from www.Manualslib.com manuals search engine

BRORN-01

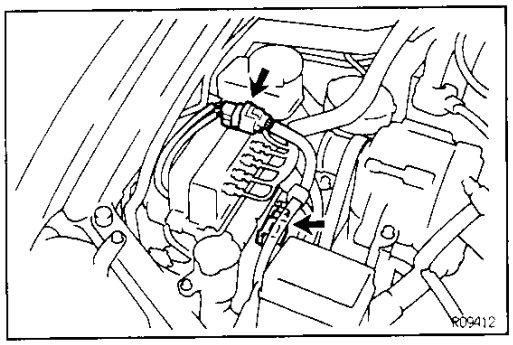

ABS ACTUATOR INSPECTION

1. **INSPECT BATTERY POSITIVE VOLTAGE**
   Battery positive voltage:
   10—14 V
2. **DISCONNECT CONNECTORS FROM ACTUATOR**
   Disconnect the 2 connectors from the actuator.
3. **CONNECT ACTUATOR CHECKER (SST) TO ACTUATOR**

(a) Connect the actuator checker (SST) to the actuator side wire harnesses via the sub — wire harnesses (SST), as shown.
SST 09990—00150, 09990—00250, 09990—00300, 09990—00360

(b) Connect the red cable of the checker to the battery positive (+) terminal and black cable to the negative (—) terminal. Connect the black cable of the sub—wire harnesses to the battery negative (—) terminal or body ground.

BR

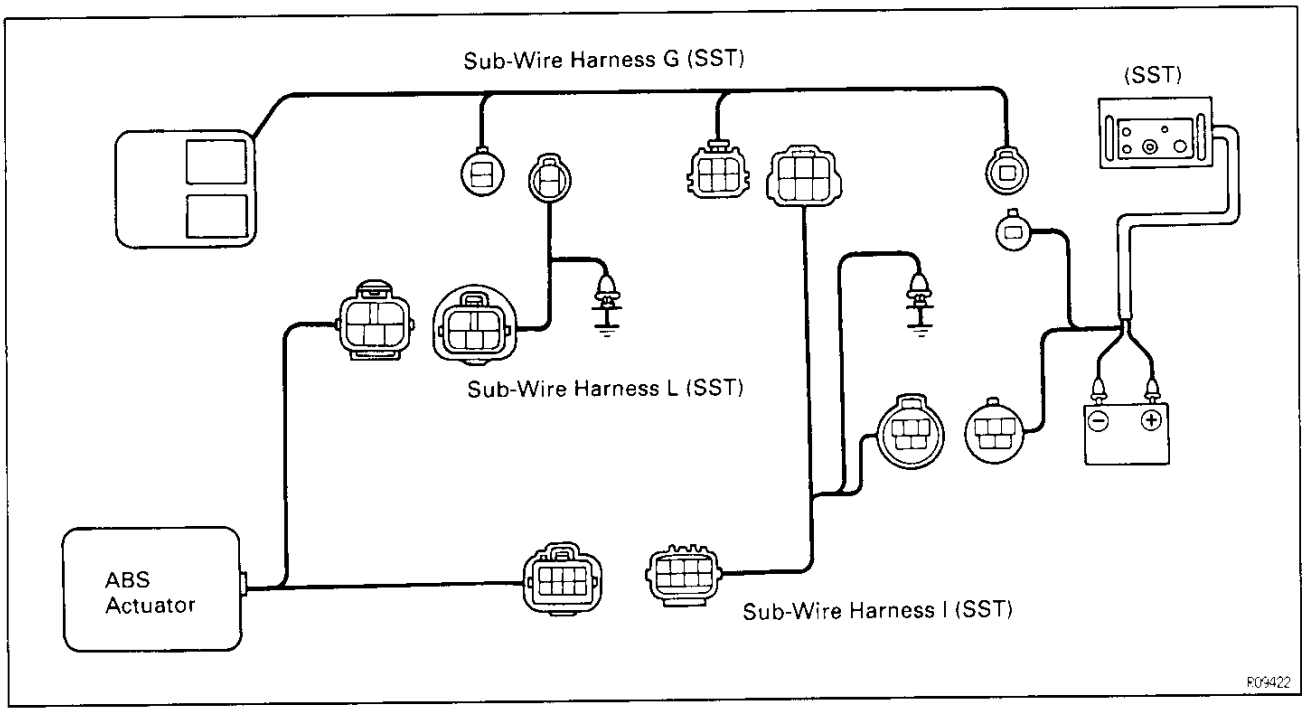

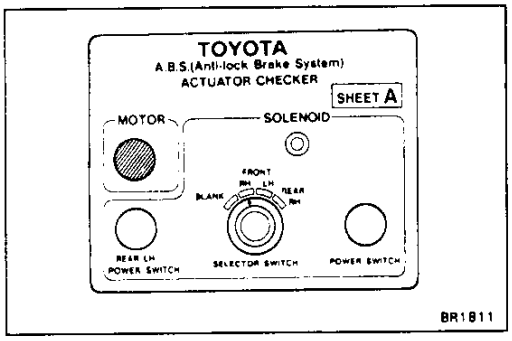

(c) Place the "SHEET A" (SST) on the actuator checker.
SST 09990—00163

Downloaded from www.Manualslib.com manuals search engine

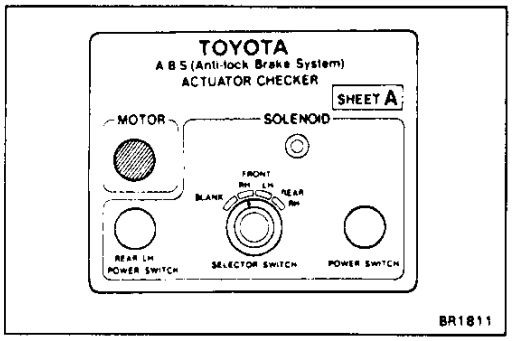

4. INSPECT BRAKE ACTUATOR OPERATION

(a) Start the engine, and run it at idle.

(b) Turn the selector switch of the actuator checker to "FRONT RH" position.

(c) Push and hold in the MOTOR switch for a few seconds. Make sure that you can hear the motor run.

(d) Depress the brake pedal and hold it for about 15 seconds, and check that the pedal does not go down.

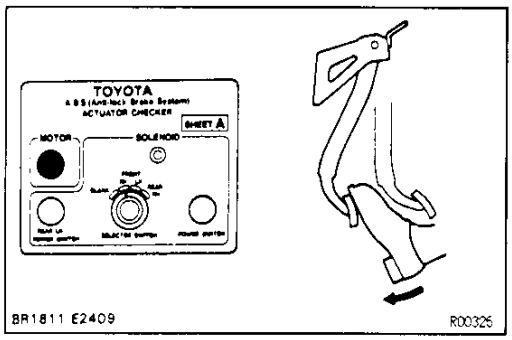

(e) With your foot still applied onto the brake pedal, push MOTOR switch and check that the brake pedal does not pulsate.

BR

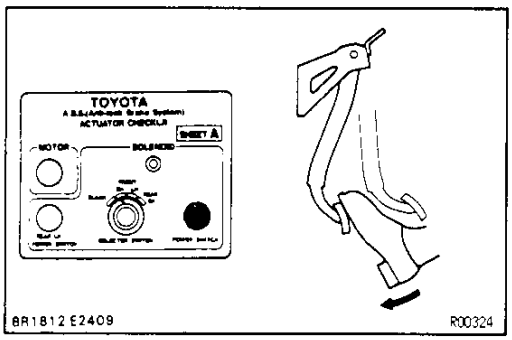

(f) Depress the brake pedal and hold it. As you hold the pedal down, push and hold in the POWER switch for a few seconds. Check that the pedal does not go down.
NOTICE: Do not keep the power switch pushing more than 10 seconds.

(g) With your foot still applied onto the brake pedal, release the POWER switch and check that the pedal goes down.

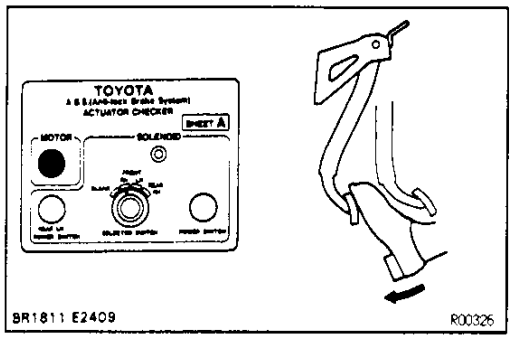

(h) With your foot still applied onto the brake pedal, push the MOTOR switch and check that the brake pedal returns.

(i) Release the brake pedal.

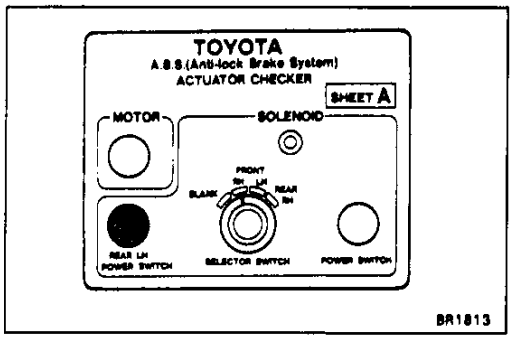

5. EXCEPT "FRONT RH" POSITION:

(a) Turn the selector switch to "FRONT LH" position.

(b) Repeating (c) to (i) to the step 5, check the actuator operation similarly.

(c) Similarly, inspect "REAR RH" and "REAR LH" position.

Downloaded from www.Manualslib.com manuals search engine

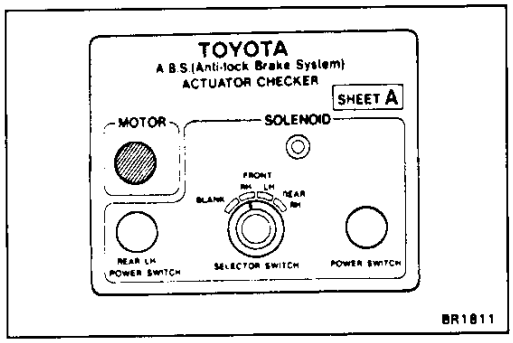

6. PUSH MOTOR SWITCH

(a) Push and hold in the MOTOR switch for a few seconds.

(b) Stop the engine.

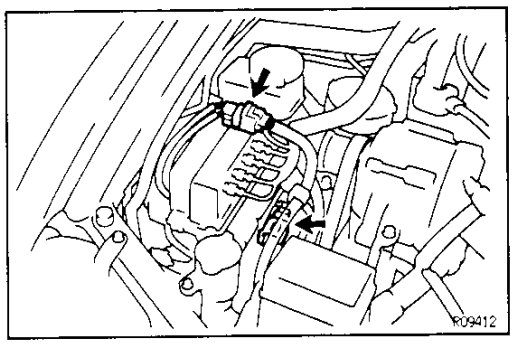

7. DISCONNECT ACTUATOR CHECKER (SST) FROM ACTUATOR

(a) Disconnect the actuator checker (SST) and sub–wire harnesses (SST) from the actuator.
SST 09990–00150, 09990–00250, 09990–00300, 09990–00360

(b) Connect the actuator connectors.

(c) Clear the diagnostic trouble codes.
(See page BR–75)

BR

Downloaded from www.Manualslib.com manuals search engine

ABS RELAY

BR0RJ-01

ABS RELAY INSPECTION

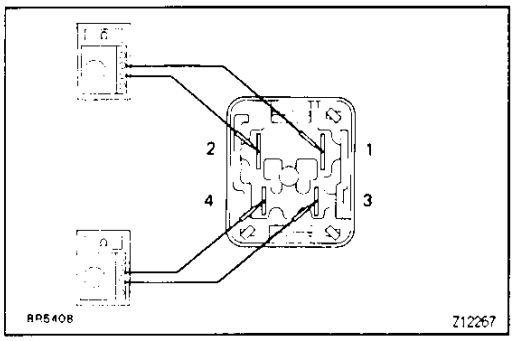

1. INSPECT CONTINUITY OF MOTOR RELAY CIRCUIT

(a) Check that there is no continuity between terminals 1 and 2.

(b) Check that there is continuity between terminals 3 and 4.

If continuity is not as specified, replace the relay.

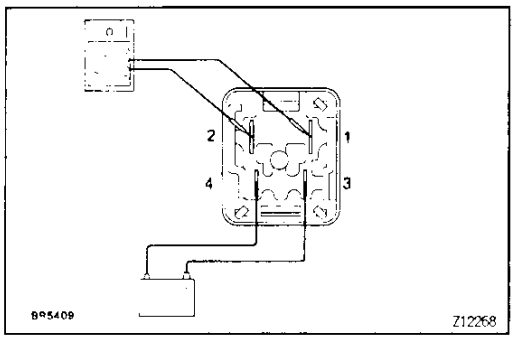

2. INSPECT OPERATION OF MOTOR RELAY CIRCUIT

(a) Connect the positive (+) lead from the battery to terminal 3 and negative (−) lead to terminal 4.

(b) Check that there is continuity between terminals 1 and 2.

If operation is not as specified, replace the relay.

BR

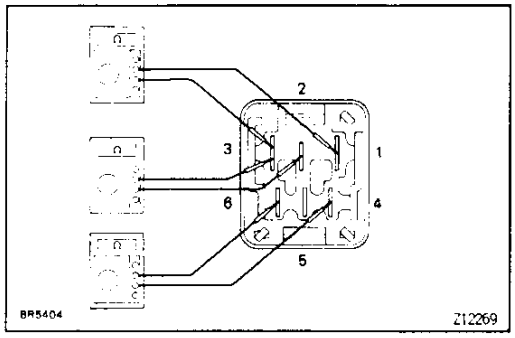

3. INSPECT CONTINUITY OF SOLENOID RELAY CIRCUIT

(a) Check that there is no continuity between terminals 1 and 3.

(b) Check that there is continuity between terminals 2 and 3.

(c) Check that there is continuity between terminals 4 and 6.

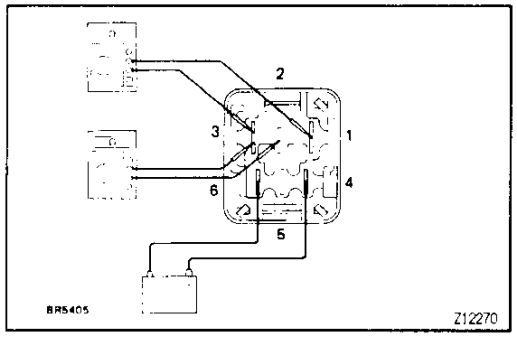

4. INSPECT OPERATION OF SOLENOID RELAY CIRCUIT

(a) Connect the positive (+) lead from the battery to terminal 4 and negative (−) lead to terminal 6.

(b) Check that there is continuity between terminals 1 and 3.

(c) Check that there is no continuity between terminals 2 and 3.

If operation is not as specified, replace the relay.

Downloaded from www.Manualslib.com manuals search engine

FRONT SPEED SENSOR

BR02Z–08

COMPONENTS

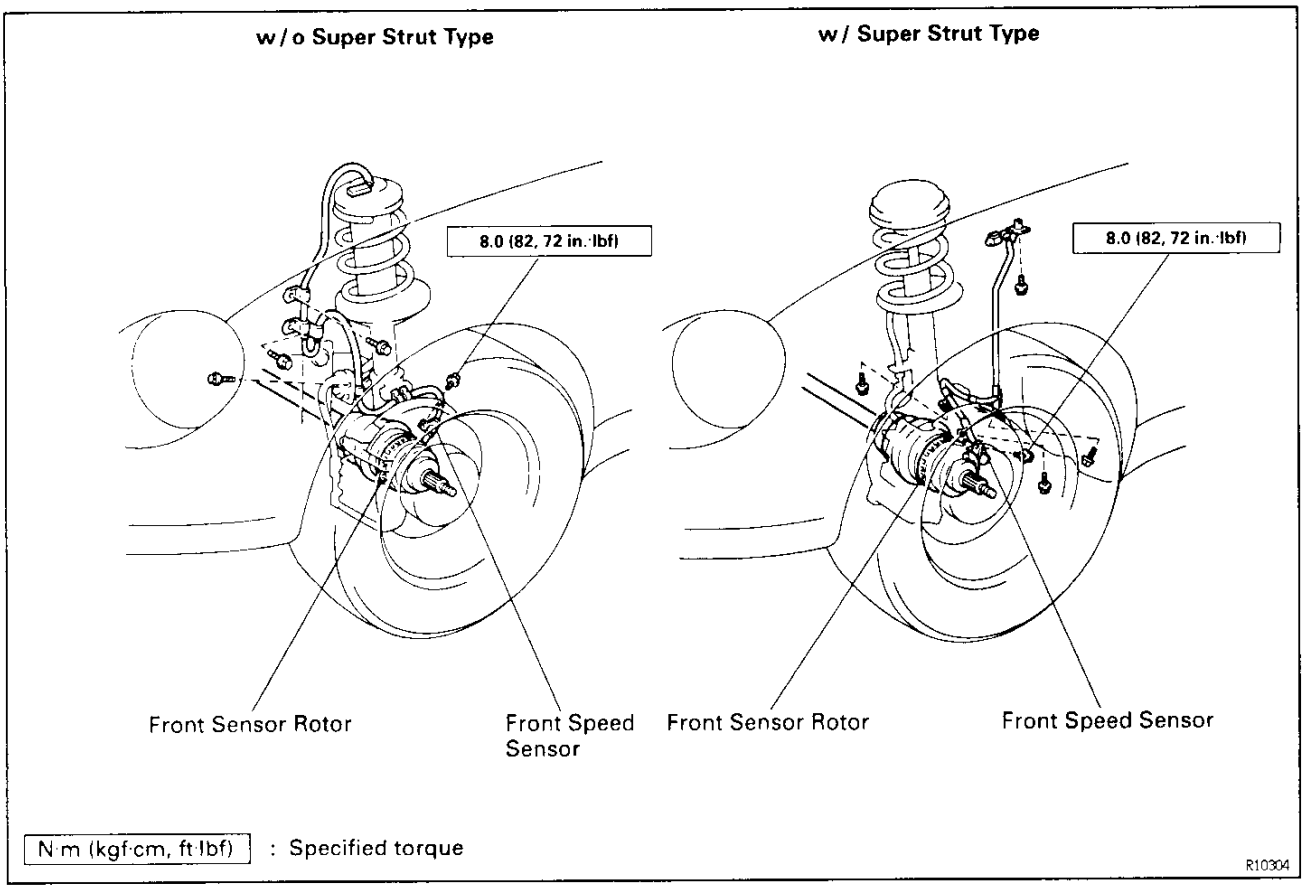

BR

BR030–0A

FRONT SPEED SENSOR INSPECTION

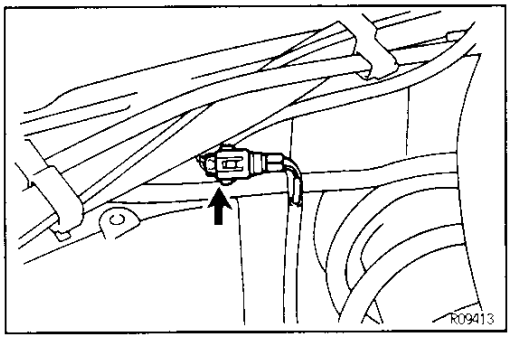

1. INSPECT SPEED SENSOR

(a) Disconnect the speed sensor connector.

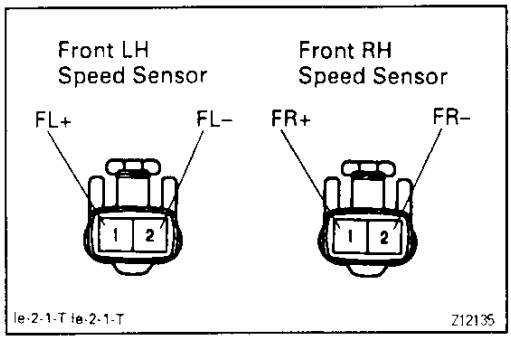

(b) Measure the resistance between terminals FR+ and FR–, and FL+ and FL–.

Resistance:

0.6 – 1.8 kΩ

If resistance value is not as specified, replace the sensor.

Downloaded from www.Manualslib.com manuals search engine

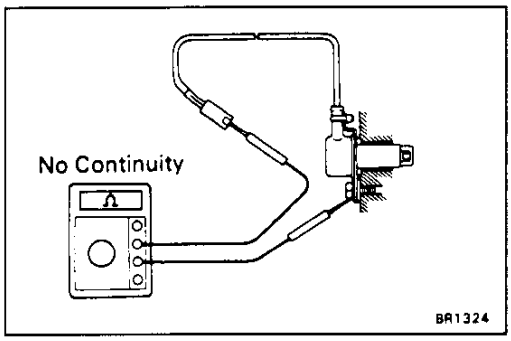

(c) Check that there is no continuity between each terminal and sensor body.
If there is continuity, replace the sensor.
(d) Connect the speed sensor connector.

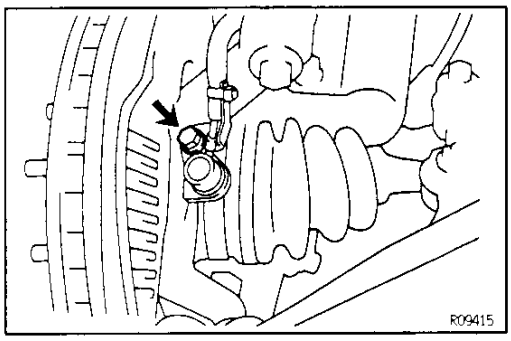

2. INSPECT SENSOR INSTALLATION
Check that the sensor installation bolt is tightened properly. If not, tighten the bolt.
Torque: 8.0 N·m (82 kgf·cm, 71 in.·lbf)

BR

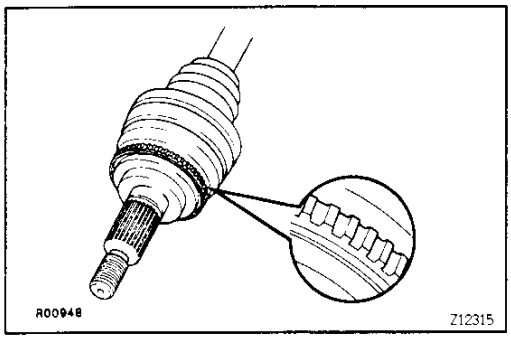

3. VISUALLY INSPECT SENSOR ROTOR SERRATIONS
(a) Remove the drive shaft.
(See page SA—41, 60, 75)
(b) Inspect the sensor rotor serrations for scratches, cracks, warping or missing teeth.
(c) Install the drive shaft.
(See page SA—41, 60, 75)
4. PERFORM SPEED SENSOR SIGNAL CHECK
(See page BR—82)

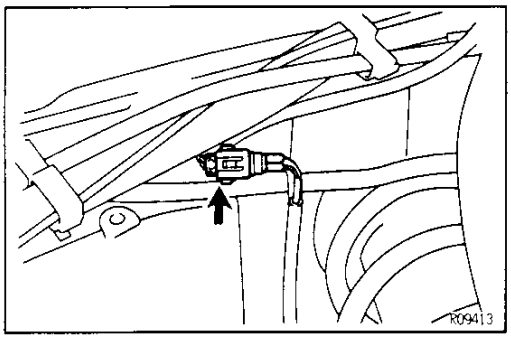

FRONT SPEED SENSOR REMOVAL

BR0GG—02

HINT: When replacing the sensor or sensor harness, replace the sensor and sensor harness together as a set.

1. DISCONNECT SPEED SENSOR CONNECTOR
(a) Remove the fender shield.
(b) Disconnect the speed sensor connector.

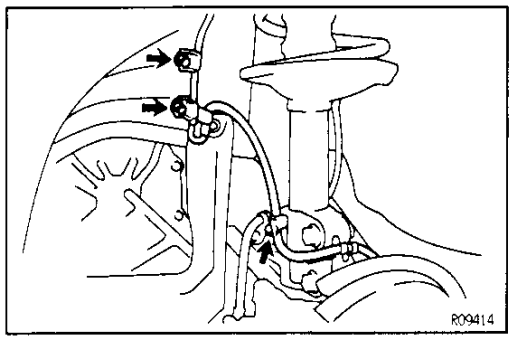

2. REMOVE SPEED SENSOR
w/o Super Strut Type Suspension:
(a) Remove the 3 clamp bolts holding the sensor harness from the body and shock absorber.

Downloaded from www.Manualslib.com manuals search engine

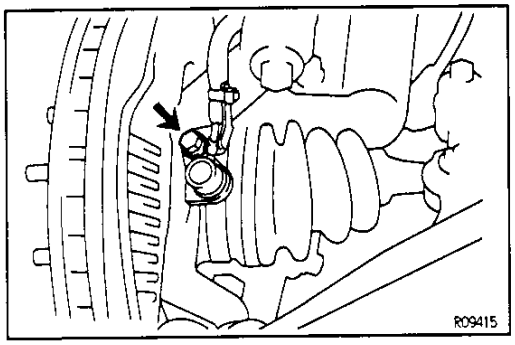

(b) Remove the speed sensor installation bolt from the steering knuckle.

(c) Remove the clamp and speed sensor.

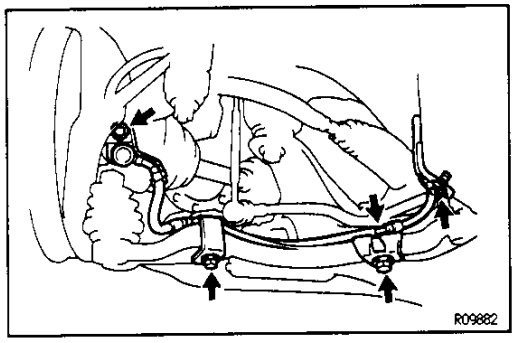

w/ Super Strut Type Suspension:

(a) Remove the 3 bolts from the lower suspension arm.

(b) Remove the speed sensor installation bolt from the steering knuckle.

BR

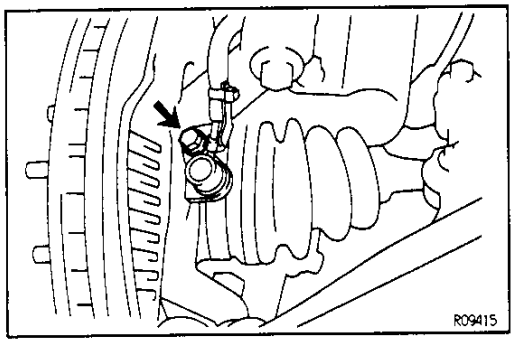

FRONT SPEED SENSOR INSTALLATION

BRORK-01

1. INSTALL SPEED SENSOR

w/o Super Strut Type Suspension:

(a) Install the speed sensor to the steering knuckle.

Torque: 8.0 N·m (82 kgf·cm, 71 in.·lbf)

NOTICE: Make sure that—

- There are no foreign objects on the sensor or the part of the knuckle to which the sensor is to be installed.
- The sensor is installed flat against the knuckle when you thighten the bolt.

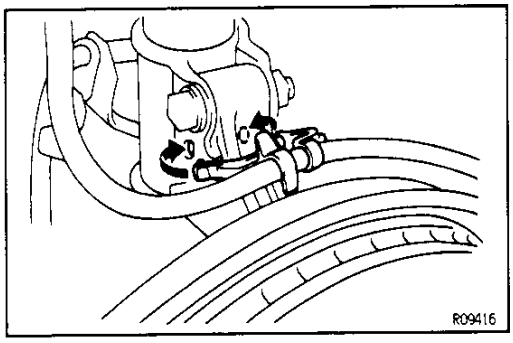

(b) Install the clamp to the shock absorber bracket until the clicking sound can be heard.

Downloaded from www.Manualslib.com manuals search engine

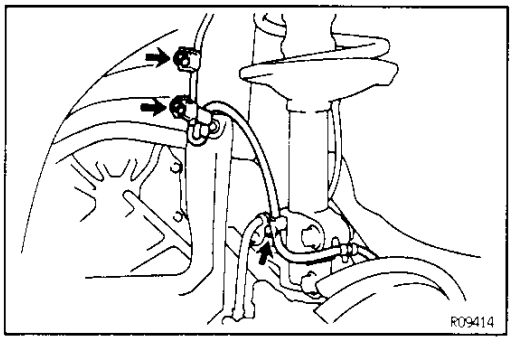

(c) Install the sensor harness with the 3 bolts.

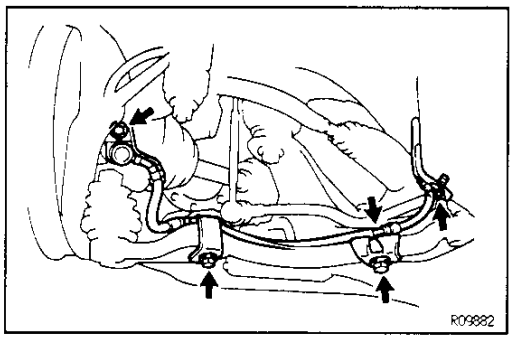

w/ Super Strut Type Suspension:

(a) Install the speed sensor to the steering knuckle.
Torque: 8.0 N·m (82 kgf·cm, 71 in.·lbf)
NOTICE: Make sure that–
- There are no foreign objects on the sensor or the part of the knuckle to which the sensor is to be installed.
- The sensor is installed flat against the knuckle when you thighten the bolt.

(b) Install the 3 bolts to the lower suspension arm.

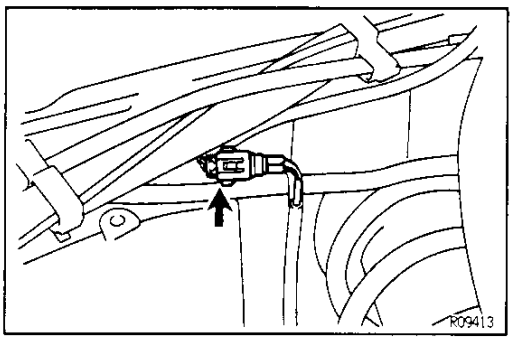

2. CONNECT SPEED SENSOR CONNECTOR

3. PREFORM SPEED SENSOR SIGNAL CHECK
(See page BR–82)

BR

Downloaded from www.Manualslib.com manuals search engine

REAR SPEED SENSOR

COMPONENTS

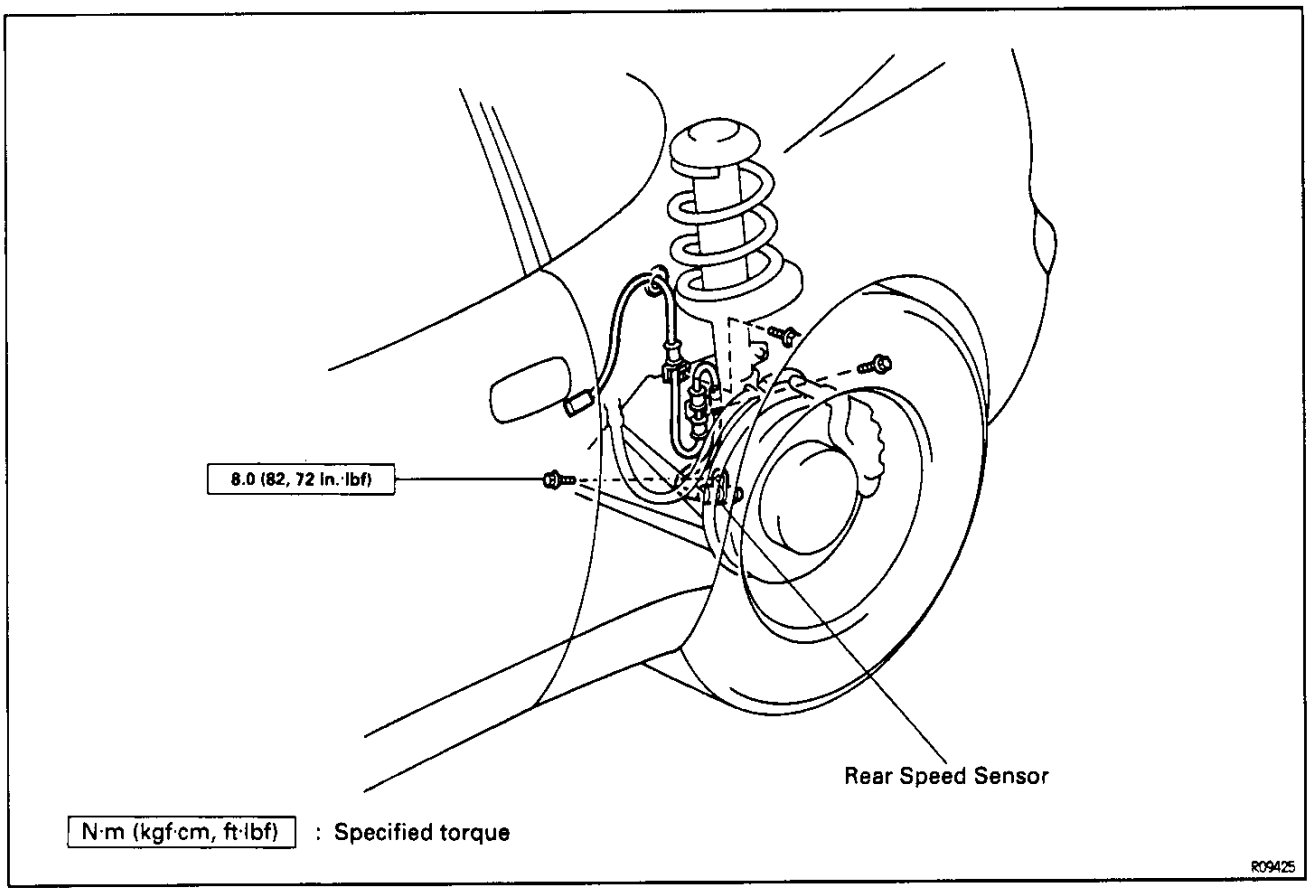

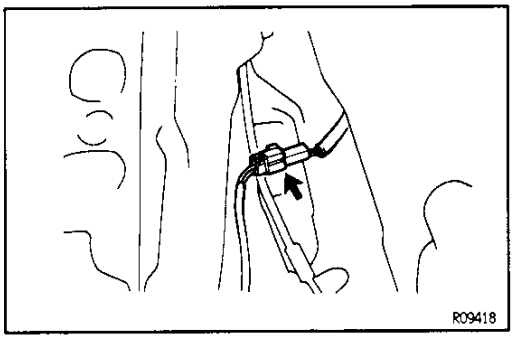

REAR SPEED SENSOR INSPECTION

1. INSPECT SPEED SENSOR

(a) Remove the rear seat back and deck trim side panel.

(b) Disconnect the speed sensor connector, and pull out the sensor wire harness with grommet.

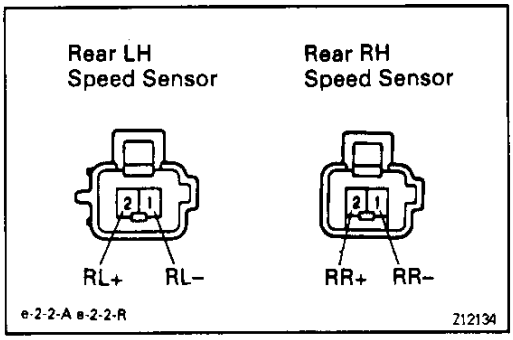

(c) Measure the resistance between terminals.

Resistance:

0.8 – 2.05 kΩ

If resistanve value is not as specified, replace the sensor.

Downloaded from www.Manualslib.com manuals search engine

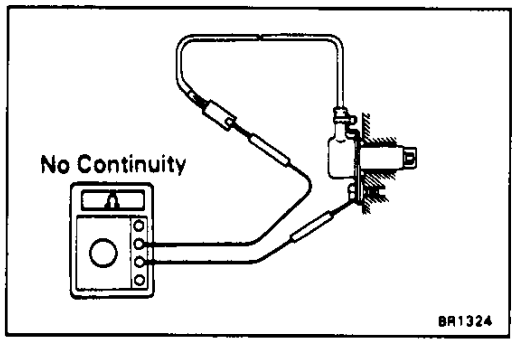

(d) Check that there is no continuity between each terminal and sensor body.

(e) Connect the speed sensor connector.

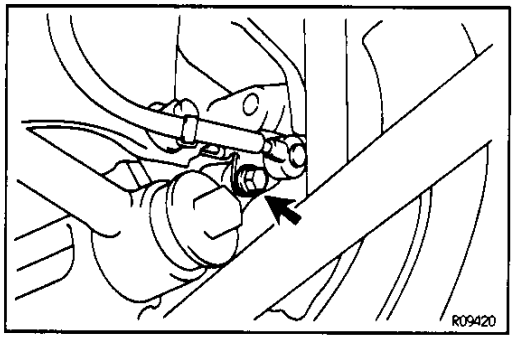

2. INSPECT SENSOR INSTALLATION

Check that the sensor installation bolt is tightened properly. If not, tighten the bolt.

Torque: 8.0 N·m (82 kgf·cm, 71 in.·lbf)

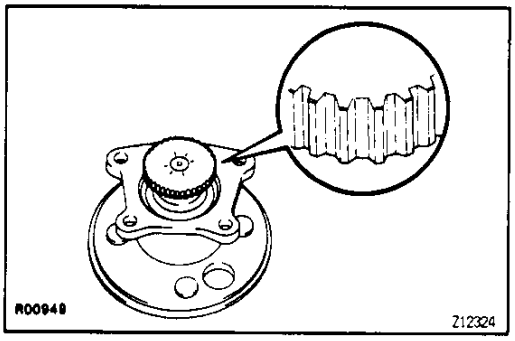

3. VISUALLY INSPECT SENSOR ROTOR SERRATIONS

(a) Remove the axle hub.
(See page SA–133)

(b) Inspect the sensor rotor serrations for scratches, cracks, warping or missing teeth.

(c) Install the axle hub.
(See page SA–133)

NOTICE: To prevent damage to the serrations, do not strike the axle hub.

4. PERFORM SPEED SENSOR SIGNAL CHECK
(See page BR–82)

Downloaded from www.Manualslib.com manuals search engine

REAR SPEED SENSOR REMOVAL

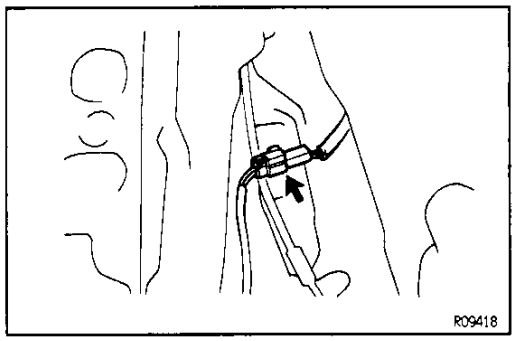

1. DISCONNECT SPEED SENSOR CONNECTOR

(a) Remove the rear seat back and deck trim side panel.

(b) Disconnect the speed sensor connector, and pull out the sensor wire harness with grommet.

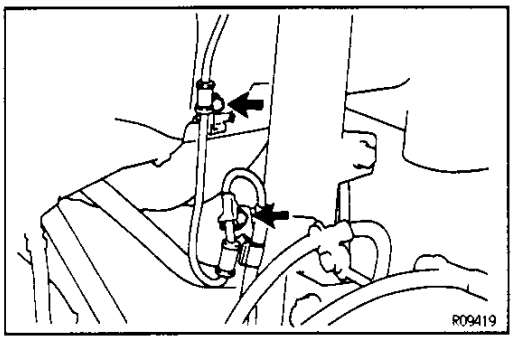

(c) Remove the 2 clamp bolts holding the sensor wire harness from the body and shock absorber.

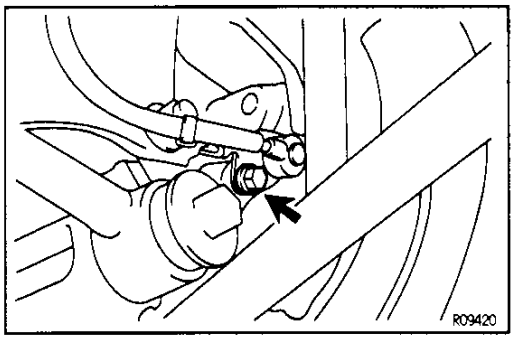

2. REMOVE SPEED SENSOR

Remove the speed sensor from the axle carrier.

Downloaded from www.Manualslib.com manuals search engine

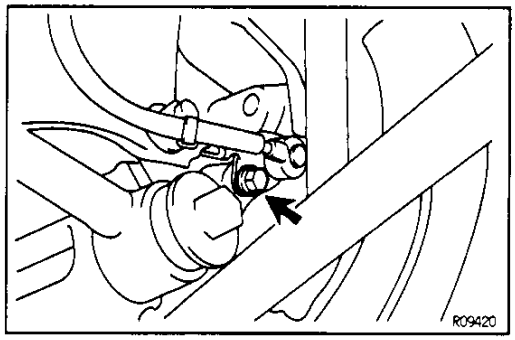

REAR SPEED SENSOR INSTALLATION

1. INSTALL SPEED SENSOR

Install the speed sensor to the axle carrier.

Torque: 8.0 N·m (82 kgf·cm, 71 in.·lbf)

NOTICE: Make sure that—

- **There are no foreign objects on the sensor or the part of the knuckle to which the sensor is to be installed.**
- **The sensor is installed flat against the knuckle when you tighten the blot.**

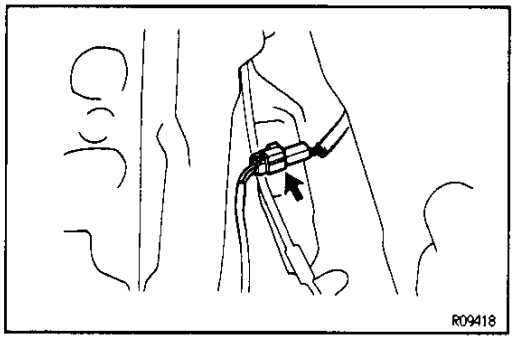

2. CONNECT SPEED SENSOR CONNECTOR

(a) Feed the sensor harness connector back inside the vehicle, connect the connector.

(b) Install the deck trim side panel and rear seat back.

BR

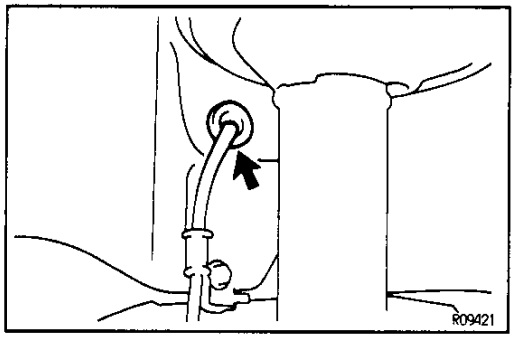

(c) Install the grommet securely.

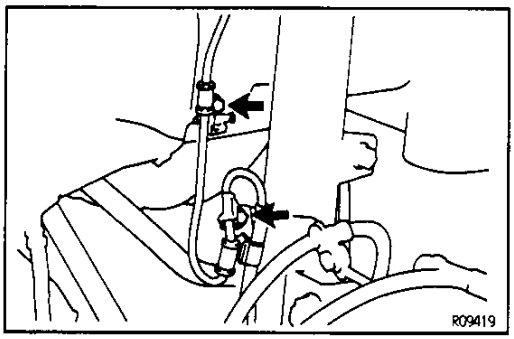

(d) Install the sensor harness with 2 clamps and bolts.

3. PERFORM SPEED SENSOR SIGNAL CHECK

(See page BR—82)

Downloaded from www.Manualslib.com manuals search engine

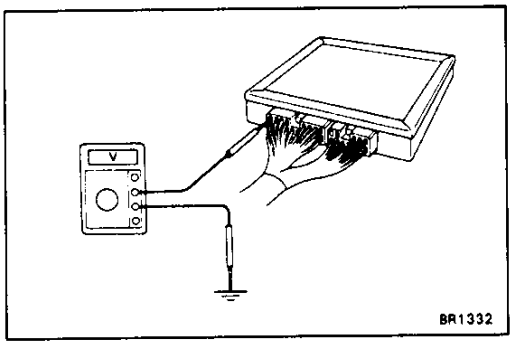

ANTI–LOCK BRAKE SYSTEM CIRCUIT

BROGL-03

SYSTEM CIRCUIT INSPECTION

1. INSPECT SYSTEM CIRCUIT WITH CONNECTOR CONNECTED

(a) Remove the ABS ECU.

(b) Using a voltmeter with high impedance (10 kΩ/V minimum), measure the voltage at each terminal and body ground.

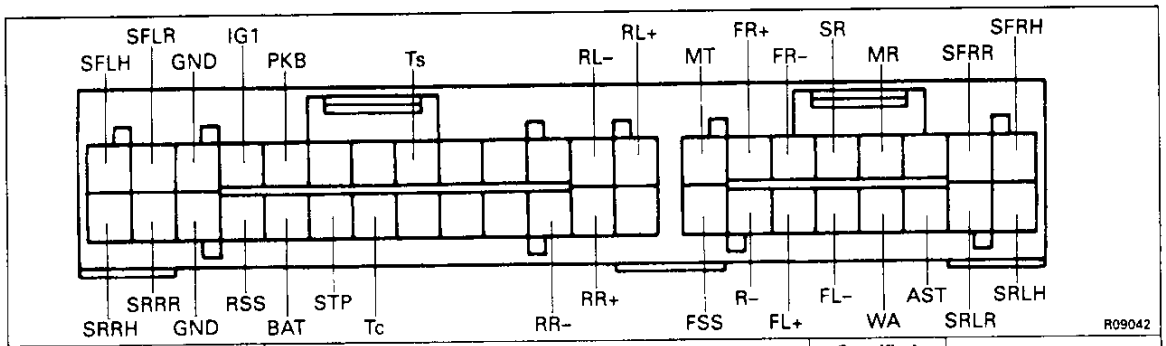

Tester Connection	Check Item	Condition	Specified Value	Trouble Part
SFRH	Voltage	IG switch ON and "ABS" warning light goes OFF	10 ~ 14 V	Actuator Solenoid relay wiring harness
SFRR				
SR	Voltage	IG switch ON and "ABS" warning light goes ON	About 0 V	ABS ECU Solenoid relay wiring harness
		IG switch ON and "ABS" warning light goes OFF	9 ~ 14 V	
FR–	Continuity	IG switch OFF	Continuity	ABS ECU wiring harness
SRLH	Voltage	IG switch ON and "ABS" warning light goes OFF	10 ~ 14 V	Actuator Solenoid relay wiring harness
SRLR				
WA	Voltage	IG switch ON and "ABS" warning light goes ON	Below 1.5 V	ABS ECU "ABS" warning light wiring harness
		IG switch ON and "ABS" warning light goes OFF	10 ~ 14 V	
FL–	Continuity	IG switch OFF	Continuity	ABS ECU wiring harness
R–				
FSS				
RL–				
Ts	Voltage	IG switch ON and check connector Ts– E_1 not connected	10 ~ 14 V	
		IG switch ON and check connector Ts– E_1 connected	Below 1.0 V	
PKB	Voltage	IG switch ON and PKB lever pulled	Below 1.5 V	Parking brake switch brake warning light wiring harness
		IG switch ON and PKB lever returned	10 ~ 14 V	
IG1	Voltage	IG switch ON	10 ~ 14 V	ECU-IG Fuse
GND	Continuity	IG switch OFF	Continuity	Wiring harness
SFLR	Voltage	IG switch ON and "ABS" warning light goes OFF	10 ~ 14 V	Actuator Solenoid relay wiring harness
SFLH				
RR–	Continuity	IG switch OFF	Continuity	ABS ECU wiring harness
Tc	Voltage	IG switch ON and check connector Tc– E_1 not connected	10 ~ 14 V	
		IG switch ON and check connector Tc– E_1 connected	About 0 V	
AST	Voltage	IG switch ON and "ABS" warning lights goes OFF	10 ~ 14 V	
		IG switch ON and "ABS" warning lights goes ON	About 0 V	

V05354

BR

Downloaded from www.Manualslib.com manuals search engine

Tester Connection	Check Item	Condition	Specified Value	Trouble Part
STP	Voltage	IG switch OFF and brake pedal depressed	8 ~ 14 V	Stop light switch Stop light wiring harness
		IG switch OFF and brake pedal returned	Below 1.5 V	
BAT	Voltage	Always	10 ~ 14 V	ECU +B Fuse
RSS	Continuity	IG switch OFF	Continuity	ABS ECU, wiring harness
GND	Continuity	IG switch OFF	Continuity	Wiring harness
SRRH	Voltage	IG switch ON and "ABS" warning light goes OFF	10 ~ 14 V	Actuator Solenoid relay wiring harness
SRRR				

V05355

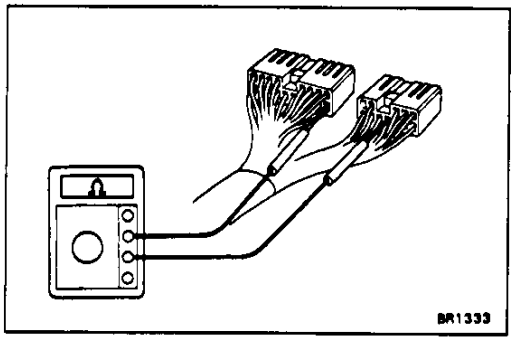

BR

2. INSPECT SYSTEM CIRCUIT WITH CONNECTOR DISCONNECTED

(a) Disconnect the connectors from the ECU, inspect at the wire harness side connector.

Tester Connection	Check Item	Specified Value	Trouble Part	Tester Connection	Check Item	Specified Value	Trouble Part
SFLH ↔ Body Ground	Resistance	About 5.0 Ω	Actuator	SRRH ↔ Body Ground	Resistance	About 5.0 Ω	Actuator
SFLR ↔ Body Ground	Resistance	About 2.2 Ω	Actuator	SRRR ↔ Body Ground	Resistance	About 2.2 Ω	Actuator
MR ↔ R–	Resistance	56 – 68 Ω	Control relay	FL+ ↔ FL–	Resistance	0.6 – 1.8 kΩ	Front LH speed sensor
FR+ ↔ FR–	Resistance	0.6 – 1.8 kΩ	Front RH speed sensor	MT ↔ Body Ground	Continuity	Continuity	Actuator
R– ↔ SR	Resistance	72 – 88 Ω	Control relay	RR+ ↔ RR–	Resistance	0.8 – 2.05 kΩ	Rear RH speed sensor
RL+ ↔ RL–	Resistance	0.8 – 2.05 kΩ	Rear LH speed sensor	SRLR ↔ Body Ground	Resistance	About 2.2 Ω	Actuator
SFRR ↔ Body Ground	Resistance	About 2.2 Ω	Actuator	SRLH ↔ Body Ground	Resistance	About 5.0 Ω	Actuator
SFRH ↔ Body Ground	Resistance	About 5.0 Ω	Actuator				

V05356

If the circuit is not as specified, check and repair or replace the trouble part shown in the table above.

(b) Connect the connectors, and install the ECU in place.

Downloaded from www.Manualslib.com manuals search engine

SERVICE SPECIFICATIONS

SERVICE DATA

BR03A-16

Brake pedal hight from asphalt sheet	(LHD)	151.9 – 161.9 mm (5.98 – 6.37 in.)
Brake pedal hight from asphalt sheet	(RHD)	140.0 – 150.0 mm (5.50 – 5.91 in.)
Brake pedal freeplay		1 – 6 mm (0.04 – 0.24 in.)
Brake pedal reserve distance at 490 N (50 kgf, 110.2 lbf) 7A–FE, 3S–GE (LHD)		More than 90 mm (3.54 in.)
Brake pedal reserve distance at 490 N (50 kgf, 110.2 lbf) 7A–FE, 3S–GE (RHD)		More than 80 mm (3.14 in.)
Brake pedal reserve distance at 490 N (50 kgf, 110.2 lbf) 5S–FE		More than 80 mm (3.14 in.)
Brake pedal reserve distance at 490 N (50 kgf, 110.2 lbf) 3S–FE (LHD)		More than 90 mm (3.54 in.)
Brake pedal reserve distance at 490 N (50 kgf, 110.2 lbf) 3S–FE (RHD)		More than 80 mm (3.14 in.)
Brake booster push rod to piston clearance (w/ SST)		0 mm (0 in.)
Front brake pad thickness 7A–FE, 3S–FE	STD	12.0 mm (0.472 in.)
Front brake pad thickness 7A–FE, 3S–FE	Limit	1.0 mm (0.039 in.)
Front brake pad thickness 5S–FE, 3S–GE (w/o Super Strut Suspension Type)	STD	11.0 mm (0.433 in.)
Front brake pad thickness 5S–FE, 3S–GE (w/o Super Strut Suspension Type)	Limit	1.0 mm (0.039 in.)
Front brake pad thickness 3S–GE (w/ Super Strut Suspension Type)	STD	12.0 mm (0.472 in.)
Front brake pad thickness 3S–GE (w/ Super Strut Suspension Type)	Limit	1.0 mm (0.039 in.)
Front brake disc thickness 7A–FE, 3S–FE	STD	25.0 mm (0.984 in.)
Front brake disc thickness 7A–FE, 3S–FE	Limit	23.0 mm (0.906 in.)
Front brake disc thickness 5S–FE, 3S–GE	STD	28.0 mm (1.102 in.)
Front brake disc thickness 5S–FE, 3S–GE	Limit	26.0 mm (1.024 in.)
Front brake disc runout	Limit	0.05 mm (0.0020 in.)
Rear brake pad thickness	STD	10.0 mm (0.394 in.)
Rear brake pad thickness	Limit	1.0 mm (0.039 in.)
Rear brake disc thickness	STD	10.0 mm (0.394 in.)
Rear brake disc thickness	Limit	9.0 mm (0.354 in.)
Rear brake disc inside thickness	STD	170.0 mm (6.69 in.)
Rear brake disc inside thickness	Limit	171.0 mm (6.73 in.)
Parking brake lining thickness for rear disc brake	STD	2.0 mm (0.079 in.)
Parking brake lining thickness for rear disc brake	Limit	1.0 mm (0.039 in.)
Parking brake adjusting shim thickness		0.3 mm (0.012 in.) 0.6 mm (0.024 in.) 0.9 mm (0.035 in.)

BR

Downloaded from www.Manualslib.com manuals search engine

BR038-12

TORQUE SPECIFICATIONS

Part tightened	N·m	kgf·cm	ft·lbf
Master cylinder x Piston stopper bolts	10	100	7
Master cylinder x Reservoir	1.7	17.5	15.2 in.·lbf
Master cylinder x Brake booster	13	130	9
Brake line union nut	15	155	11
Brake booster clevis lock nut	25	260	19
Brake booster x Pedal bracket	13	130	9
Front disc brake cylinder installation bolt	34	350	25
Bleeder pluge	8.3	85	74 in.·lbf
Flexible hose bracket x Shock absorber	19	192	14
Front disc brake torque plate x Steering knuckle	88	900	65
Front disc brake cylinder x Flexible hose	30	310	22
Rear drum brake wheel cylinder x Backing plate	10	100	7
Rear disc brake torque plate x Axle carrier	47	475	34
Rear disc brake cylinder x Flexible hose	30	310	22
ABS actuator bracket x Body	19	195	14
ABS actuator x ABS actuator bracket	5.4	55	48 in.·lbf
Front speed sensor installation bolt	8.0	82	71 in.·lbf
Rear speed sensor installation bolt	8.0	82	71 in.·lbf

Downloaded from www.Manualslib.com manuals search engine

STEERING

GENERAL DESCRIPTION ..... SR– 2
TROUBLESHOOTING ..... SR– 2
ON–VEHICLE INSPECTION ..... SR– 2
STEERING COLUMN
PREPARATION ..... SR– 5
ASSEMBLY REMOVAL AND INSTALLATION ..... SR– 7
NON–TILT STEERING COLUMN ..... SR– 10
TILT STEERING COLUMN ..... SR– 16
POWER STEERING
DESCRIPTION ..... SR– 27
OPERATION ..... SR– 31
PREPARATION ..... SR– 36
ON–VEHICLE INSPECTION ..... SR– 39
POWER STEERING PUMP (7A–FE) ..... SR– 46
POWER STEERING PUMP (3S–GE, 3S–FE, 5S–FE) ..... SR– 58
GEAR HOUSING ..... SR– 70
SERVICE SPECIFICATIONS ..... SR– 99

Downloaded from www.Manualslib.com manuals search engine

GENERAL DESCRIPTION

SR00J-01

- **Care must be taken to replace parts properly because they could affect the performance of the steering system and result in a driving hazard.**
- **The steering wheel pad has an airbag built in, so take all due precautions when handling it. For more details, see the RS section.**

TROUBLESHOOTING

SR00K-02

Use the table below to help you find the cause of the problem. The numbers indicate the priority of the likely cause of the problem. Check each part in order. If necessary, replace these parts.

See page / Parts Name / Trouble	SA-3	SA-5, 7	SR-40	SR-39	–	SA-98, 125	–	–	SR-70	SR-14, 29
	Tires (Improperly inflated)	Front wheel alignment (Incorrect)	Fluid level (Low)	Drive belt (Loose)	Steering system joints (Worn)	Suspension arm ball joints (Worn)	Steering column (Binding)	Sliding yoke (Worn)	Steering gear housing	Front wheel bearing (Worn)
Hard steering	1	4	2	3	5	6	7		8	
Poor return	1	2					3		4	
Excessive play					1	2		3	5	4
Abnormal noise			1		2				3	

V00014

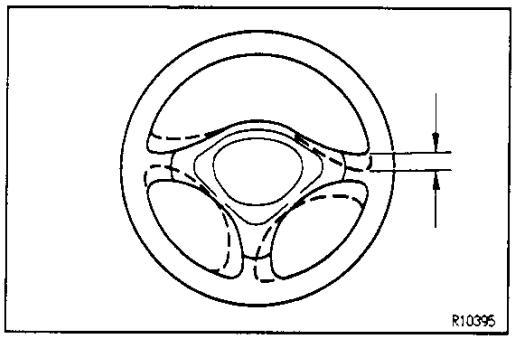

ON—VEHICLE INSPECTION

SR0QL-02

CHECK STEERING WHEEL FREEPLAY

With the vehicle stopped and tires pointed straight ahead, rock the steering wheel gently back and forth with light finger pressure.

Freeplay should not exceed the maximum.

Maximum freeplay: 30 mm (1.18 in.)

If incorrect, repair.

Downloaded from www.Manualslib.com manuals search engine

STEERING COLUMN

SR0GM-01

NON–TILT STEERING COLUMN:

This steering column is a non–tilt steering column.

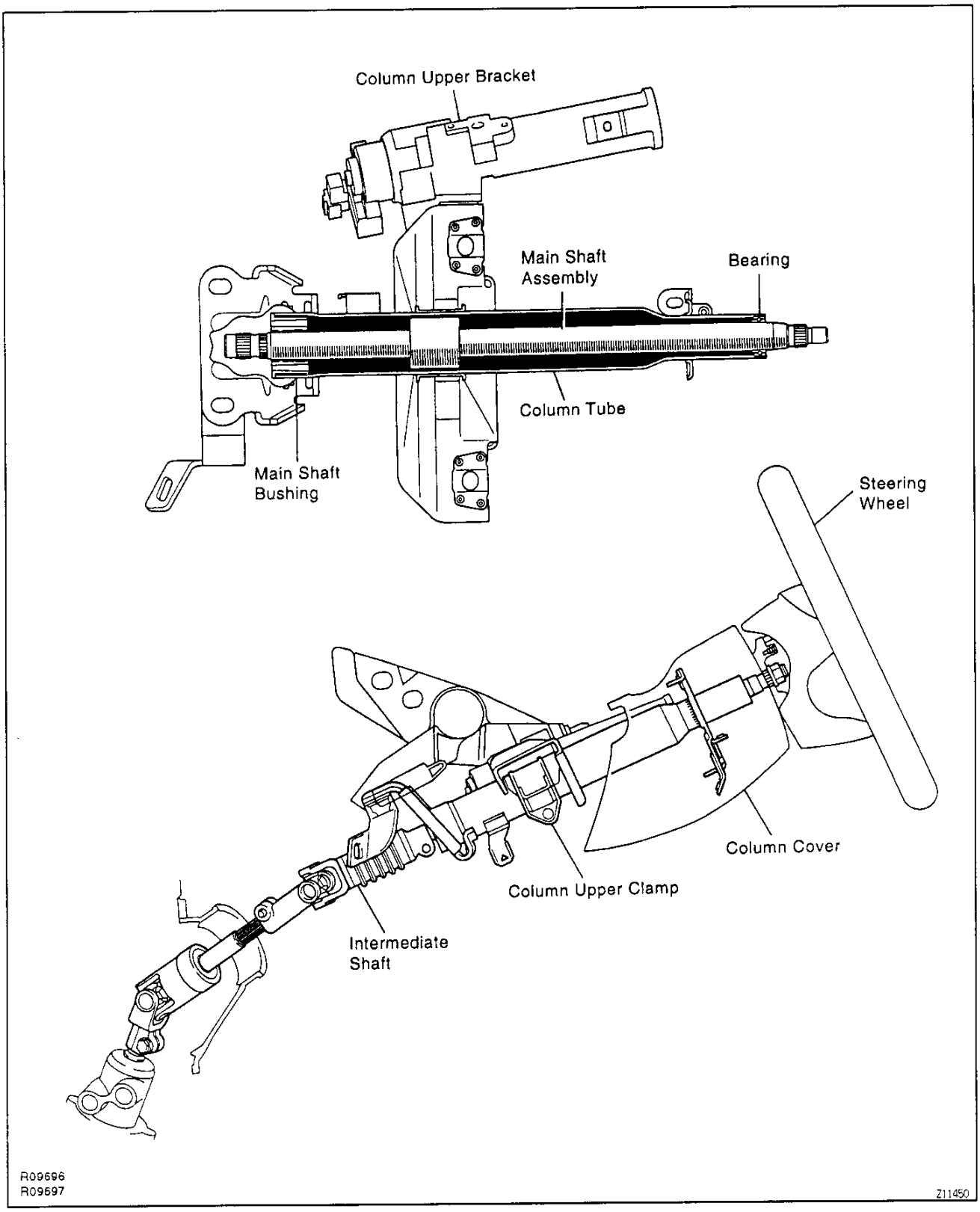

SR

Downloaded from www.Manualslib.com manuals search engine

TILT STEERING COLUMN:

This steering column is a manual tilt steering column.

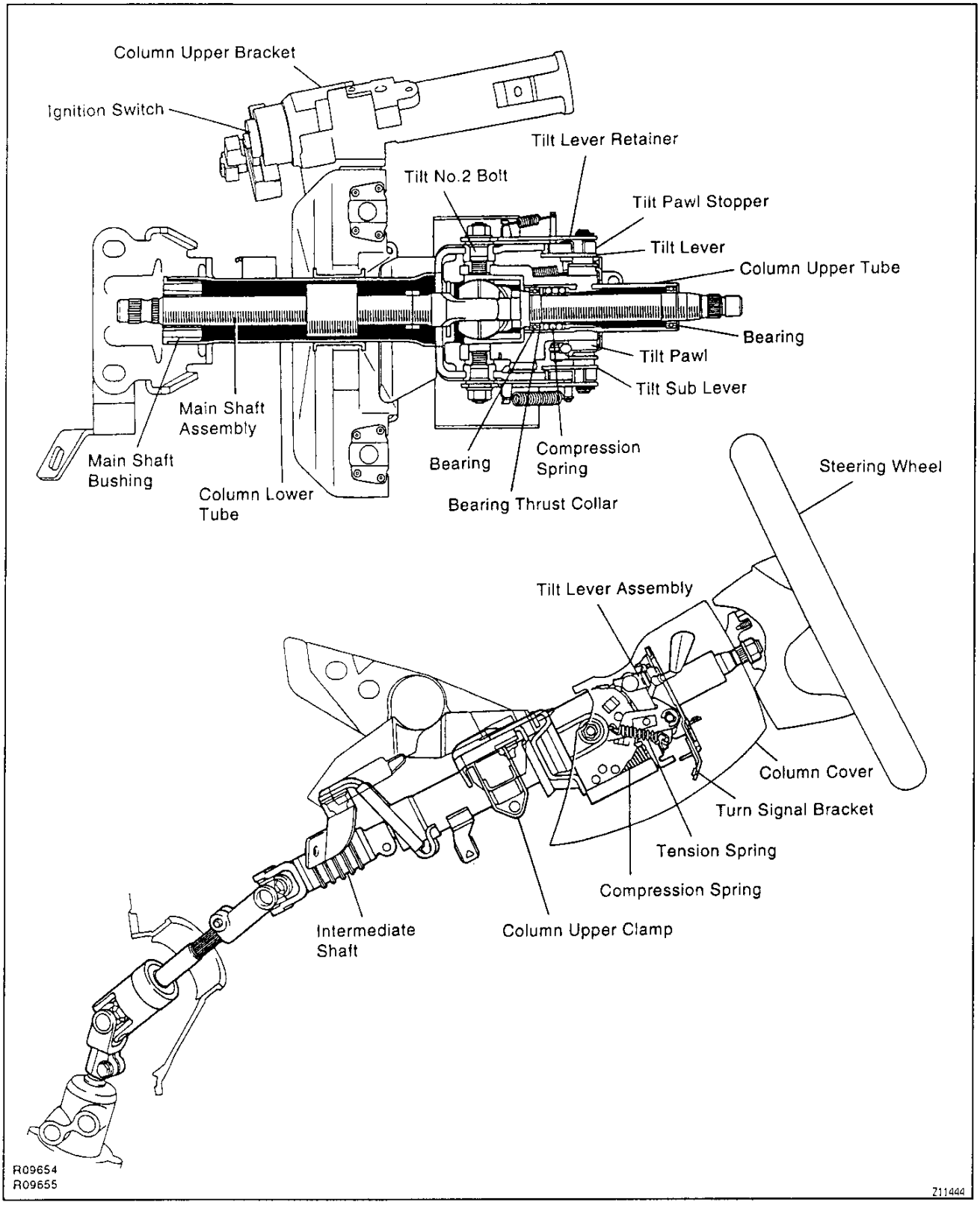

SR

Downloaded from www.Manualslib.com manuals search engine

PREPARATION

SR0QP-03

SST (SPECIAL SERVICE TOOLS)

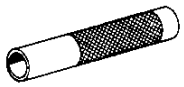	09612-22011 Tilt Handle Bearing Replacer	Main shaft bushing (Non-tilt steering column)
	09620-30010 Steering Gear Box Replacer Set	
	(09624-30010) Steering Sector Shaft Oil Seal Replacer	Main shaft bushing (Tilt steering column)
	(09626-30010) Steering Worm Front Bearing Replacer	Main shaft bushing (Tilt steering column)
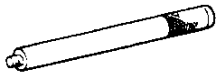	(09631-00020) Handle	Main shaft bushing (Tilt steering column)
	09904-00010 Expander Set	
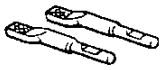	(09904-00020) No. 1 Claw	Snap ring
	(09904-00040) No. 3 Claw	Snap ring
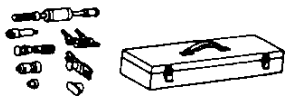	09910-00015 Puller Set	
	(09911-00011) Puller Clamp	Tilt No.2 bolt
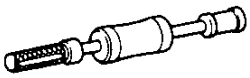	(09912-00010) Puller Slide Hammer	Tilt No.2 bolt

SR

Downloaded from www.Manualslib.com manuals search engine

	09950–40010 Puller B Set	
	(09957–04010) Attachment	Main shaft assembly (Tilt steering column)
	(09958–04010) Holder	Main shaft assembly (Tilt steering column)
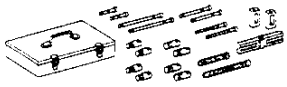	09950–50010 Puller C Set	
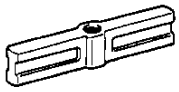	(09951–05010) Hanger 150	Steering wheel
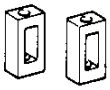	(09952–05010) Slide Arm	Steering wheel
	(09953–05020) Center Bolt 150	Steering wheel
	(09954–05020) Claw No.2	Steering wheel

SR

RECOMMENDED TOOLS

SR0QV–02

	09042–00010 Torx Socket T30	Steering wheel pad (w/ SRS Airbag)

EQUIPMENT

SR0QW–01

Torque wrench	

Downloaded from www.Manualslib.com manuals search engine

ASSEMBLY REMOVAL AND INSTALLATION

COMPONENTS

SR083-01

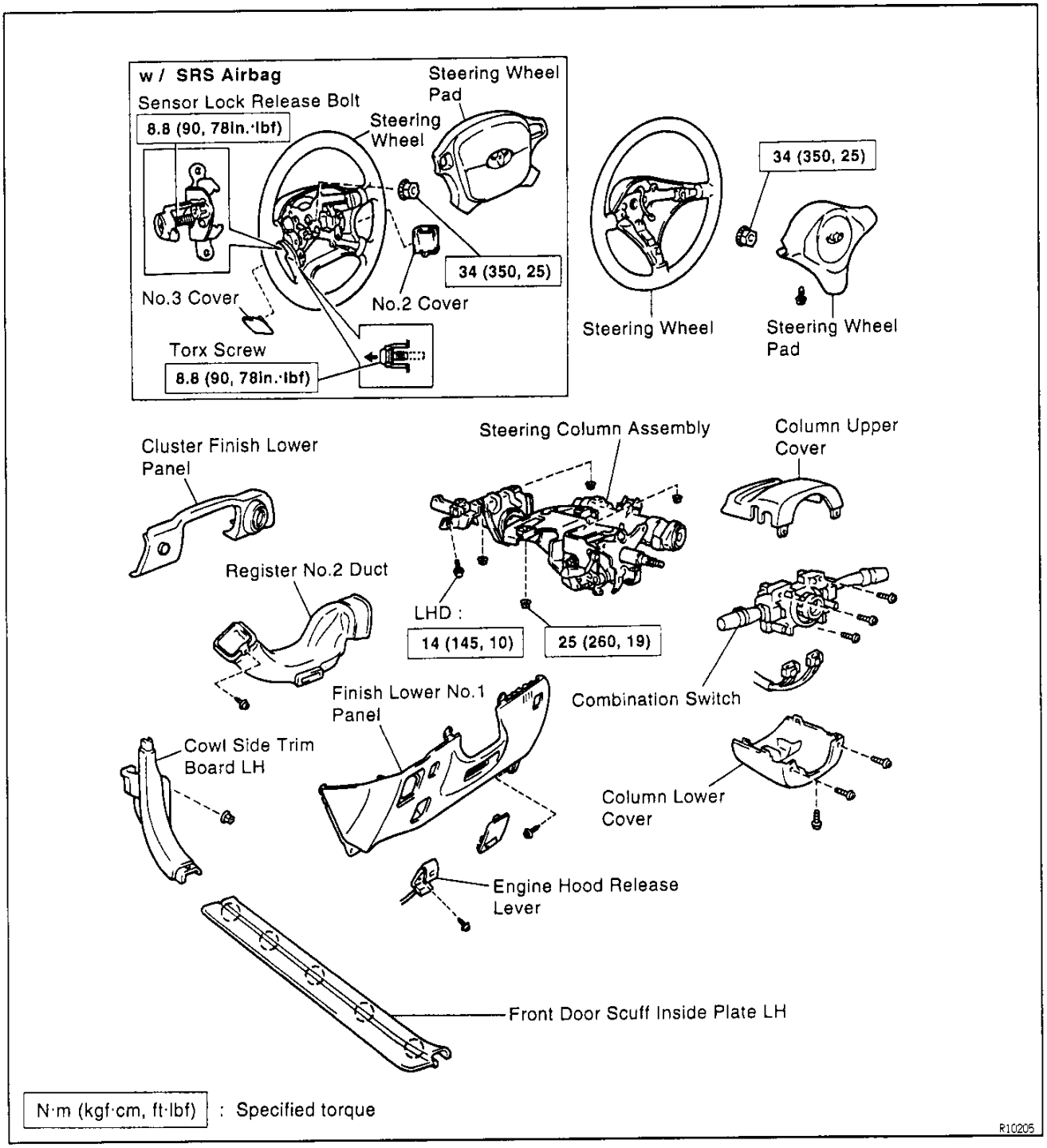

SR

Downloaded from www.Manualslib.com manuals search engine

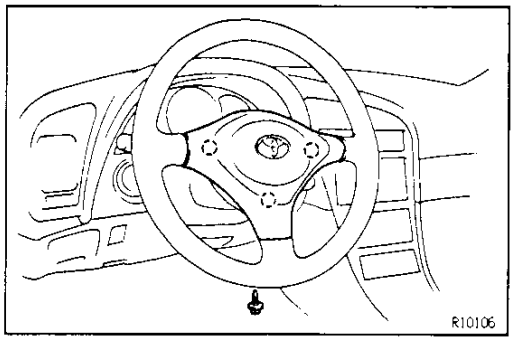

MAIN POINTS OF REMOVAL AND INSTALLATION

1. REMOVE STEERING WHEEL PAD

w/o SRS Airbag:

(a) Remove the screw.

(b) Remove the 3 clips.

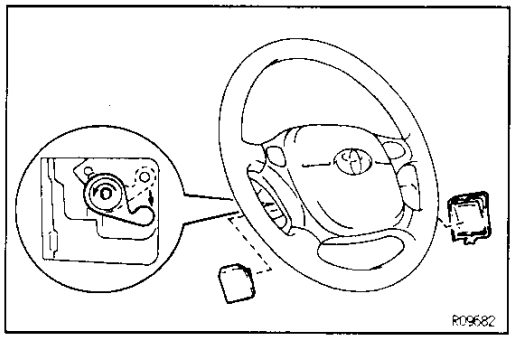

w/ SRS Airbag:

CAUTION: When the steering wheel pad is removed, always place it on a stable flat place with the pad surface facing upwards. Never place anything on top of the pad.

(a) Using a screwdriver, remove the No. 2 and No. 3 covers.
HINT: Tape the screwdriver tip before use.

(b) Using a torx socket wrench, loosen the sensor lock release bolt until it turns freely.

(c) Slide the bolt cap downwards.

(d) Using a torx socket wrench, loosen the 2 torx screws.
HINT: Loosen the screws until the groove along the screw circumference catches on the screw case.

(e) Pull the steering wheel pad out from the steering wheel.

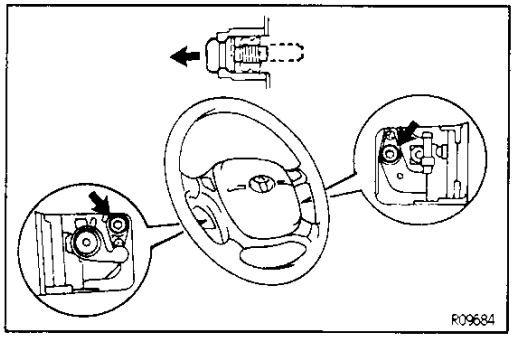

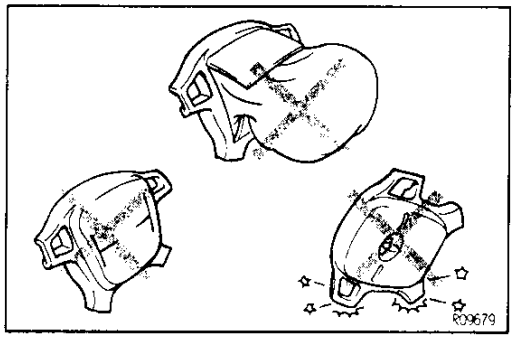

CAUTION:

- **When storing the wheel pad, keep the upper surface of the pad facing upward.**
- **Never disassemble the steering wheel pad.**

Replace the steering wheel pad with a new one if: (See RS section)

- The SRS has deployed.
- The pad surface, airbag sensor or inflator has dents, cracks or deformation.
- The SRS has been dropped.

2. REMOVE STEERING WHEEL

(a) Remove the wheel set nut.

(b) Place matchmarks on the wheel and main shaft.

(c) Using SST, remove the wheel.
SST 09950–50010 (09951–05010)
(09952–05010)
(09953–05020)
(09954–05020)

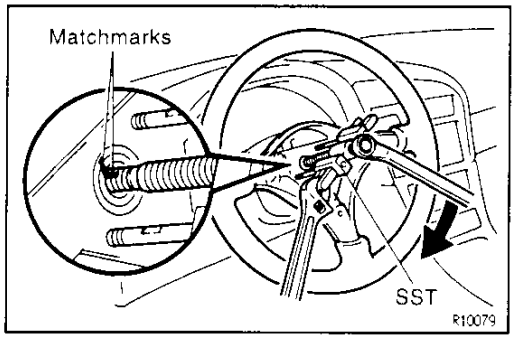

Downloaded from www.Manualslib.com manuals search engine

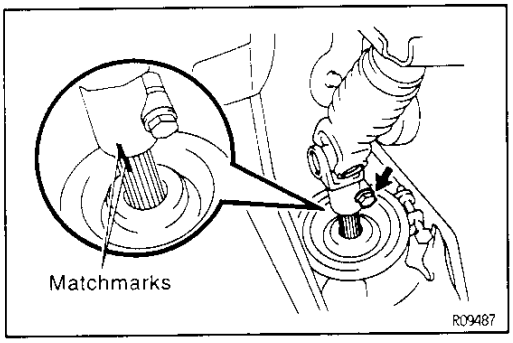

3. DISCONNECT AND CONNECT INTERMEDIATE SHAFT

(a) Place matchmarks on the intermediate shaft and intermediate No.2 shaft.

(b) Remove the bolt.

(c) Disconnect the intermediate shaft.

(d) Align the matchmarks on the intermediate shaft and intermediate No.2 shaft, and connect them.

(e) Torque the bolt.
Torque: 35 N·m (360 kgf·cm, 26 ft·lbf)

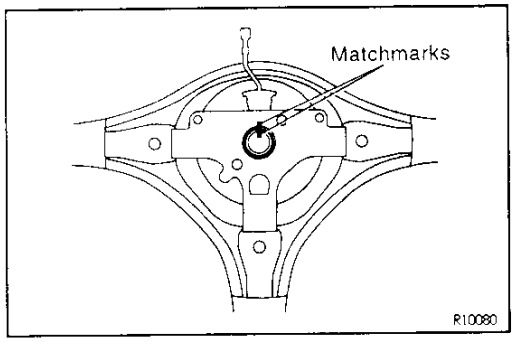

4. INSTALL STEERING WHEEL

(a) Align the matchmarks on the wheel and main shaft, and install it.

(b) Torque the wheel set nut.
Torque: 34 N·m (350 kgf·cm, 25 ft·lbf)

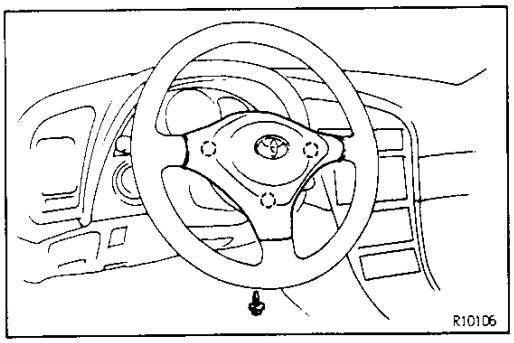

5. INSTALL STEERING WHEEL PAD

w/o SRS Airbag:
Install the pad with the screw.

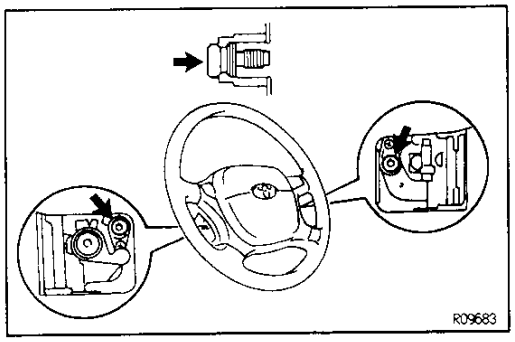

w/ SRS Airbag:
NOTICE: Never install a pad which has been used in another vehicle. When replacing a pad, always install a new pad.
(See RS section)

(a) Check that the sensor lock release bolt is loosened so that it turns without resistance.

(b) Set the pad in the steering wheel.

(c) Using a torx socket wrench, torque the 2 torx screws.
Torque: 8.8 N·m (90 kgf·cm, 78 in.·lbf)
NOTICE: Do not pinch the horn button or wire harness for the cruise control system.

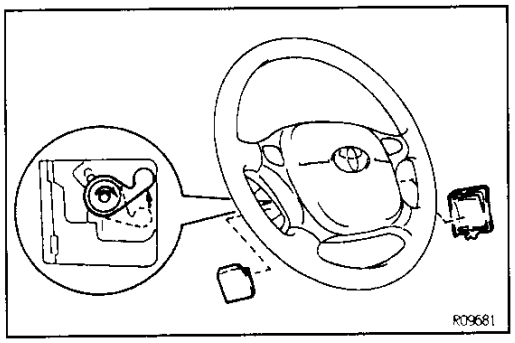

(d) Cover the torx screw with the bolt cap.

(e) Using a torx socket wrench, torque the sensor lock release bolt.
Torque: 8.8 N·m (90 kgf·cm, 78 in.·lbf)

(f) Install the No.2 and No.3 covers.
NOTICE: Confirm that the lower covers are properly installed.

6. CHECK STEERING WHEEL CENTER POINT

Downloaded from www.Manualslib.com manuals search engine

NON—TILT STEERING COLUMN COMPONENTS

SR008-01

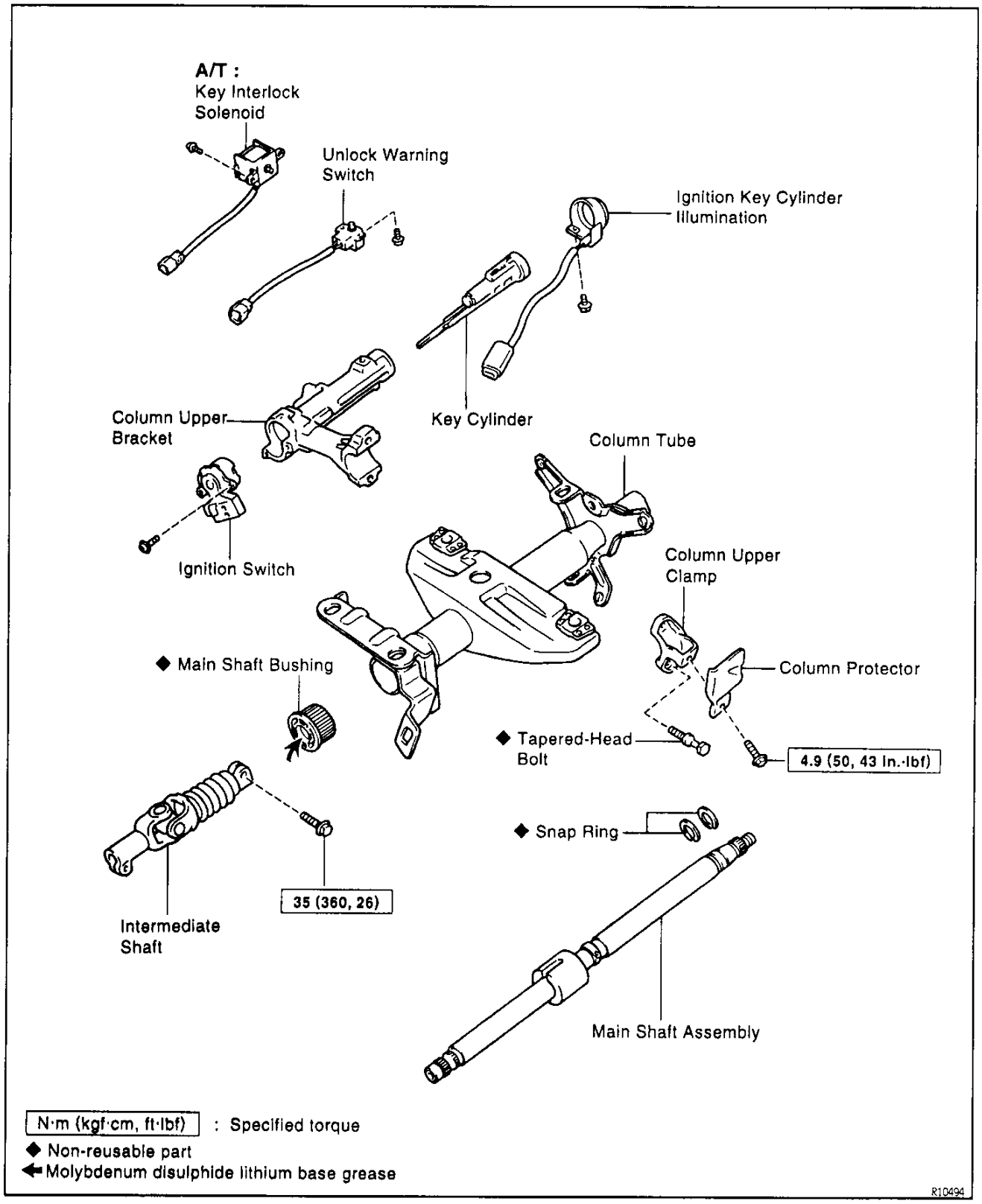

Downloaded from www.Manualslib.com manuals search engine

SR0GX-02

STEERING COLUMN DISASSEMBLY

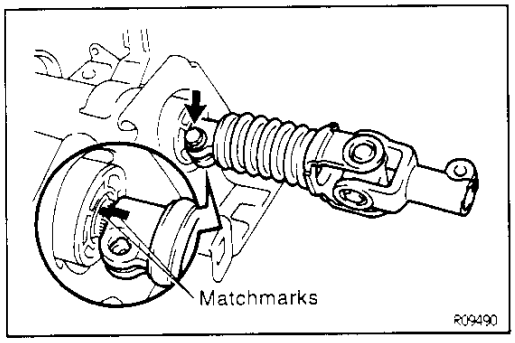

1. REMOVE IGNITION KEY CYLINDER ILLUMINATION

2. REMOVE INTERMEDIATE SHAFT

(a) Remove the bolt.

(b) Shift the shaft.

(c) Place matchmarks on the intermediate shaft and main shaft.

(d) Remove the shaft.

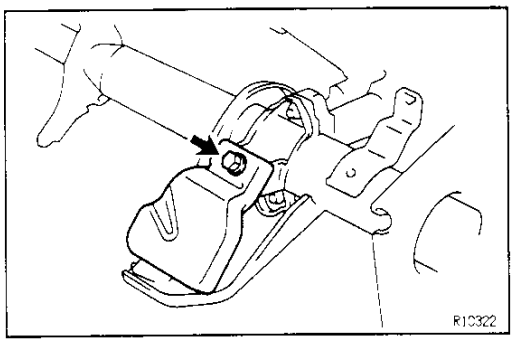

3. REMOVE COLUMN PROTECTOR

Remove the bolt.

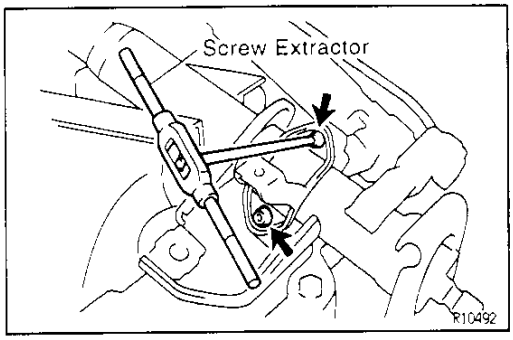

4. REMOVE COLUMN UPPER BRACKET AND COLUMN UPPER CLAMP

(a) Secure the column tube in a vise.
NOTICE: Do not tighten the vise too tight.

(b) Using a centering punch, mark the center of the 2 tapered–head bolts.

(c) Using a 4–5 mm (0.16–0.20 in.) drill, drill into the 2 bolts.

(d) Using a screw extractor, remove the 2 bolts.

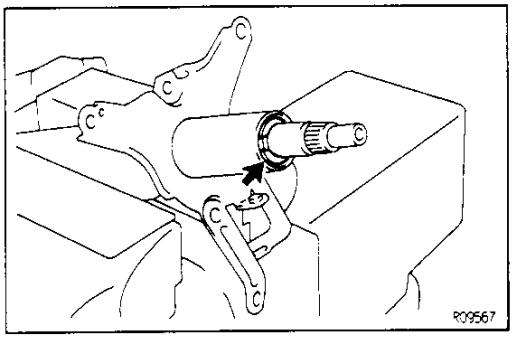

5. REMOVE MAIN SHAFT ASSEMBLY WITH MAIN SHAFT BUSHING

(a) Secure the column tube in a vise.
NOTICE: Do not tighten the vise too tight.

(b) Using snap ring pliers, remove the snap ring.

Downloaded from www.Manualslib.com manuals search engine

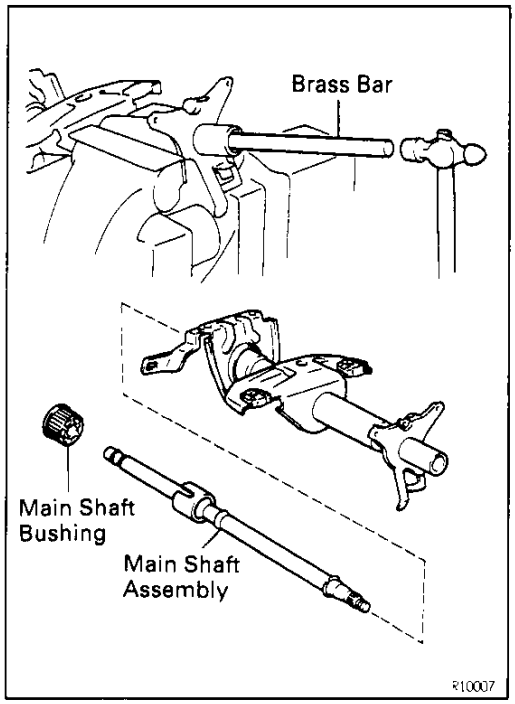

(c) Using a brass bar and hammer, tap out the shaft assembly with the bushing.
NOTICE: Take care not to drop the shaft assembly.

SR

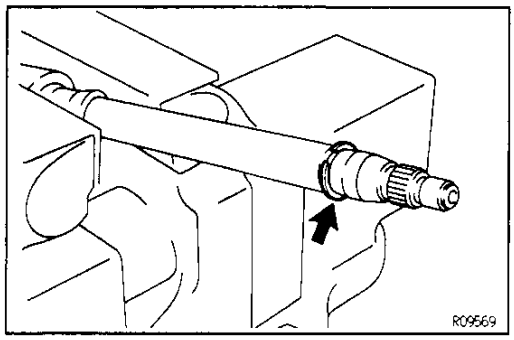

(d) Secure the shaft assembly in a vise.
NOTICE: Do not tighten the vise too tight.

(e) Using snap ring pliers, remove the snap ring.

Downloaded from www.Manualslib.com manuals search engine

SR0GY-02

STEERING COLUMN INSPECTION AND REPLACEMENT

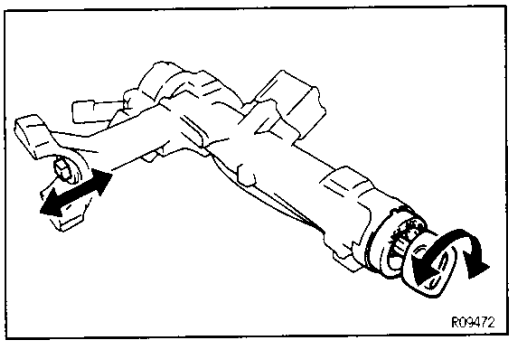

1. INSPECT KEY CYLINDER

Check that the steering lock mechanism operates properly.

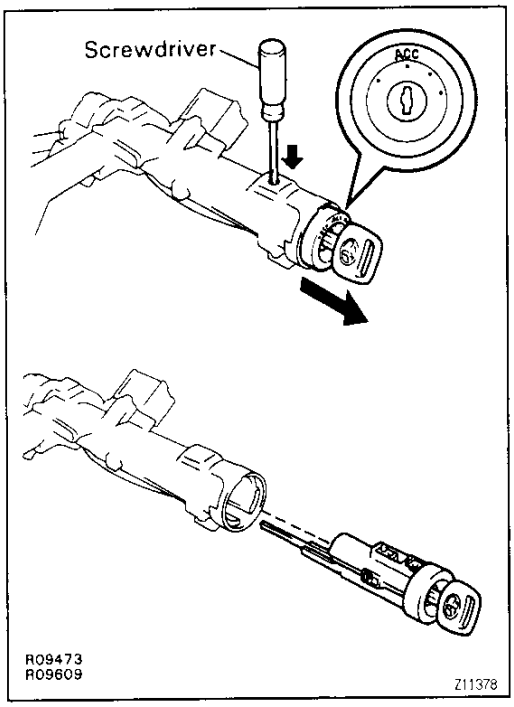

2. IF NECESSARY, REPLACE KEY CYLINDER

(a) Place the ignition key at the ACC position.

(b) Push down the stop pin with a screwdriver, and pull out the cylinder.

(c) Install a new cylinder.
HINT: Make sure the ignition key is at the ACC position.

SR

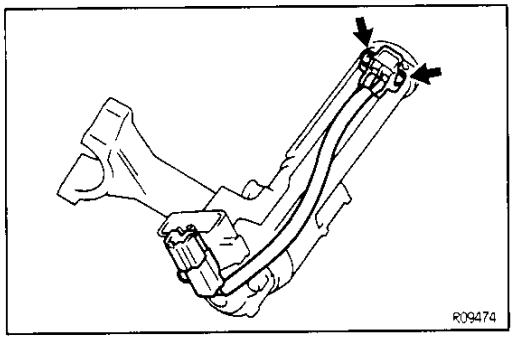

3. IF NECESSARY, REPLACE UNLOCK WARNING SWITCH

(a) Remove the 2 screws.

(b) Tighten the 2 screws.

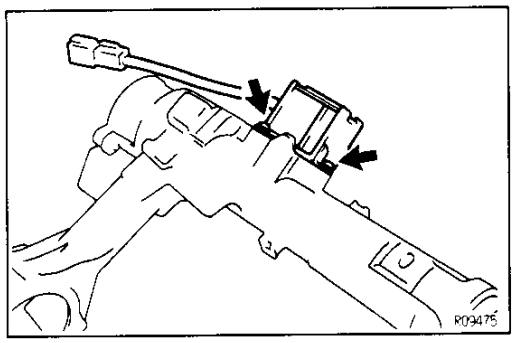

4. IF NECESSARY, REPLACE KEY INTERLOCK SOLENOID

A/T:

(a) Remove the 2 screws.

(b) Tighten the 2 screws.

Downloaded from www.Manualslib.com manuals search engine

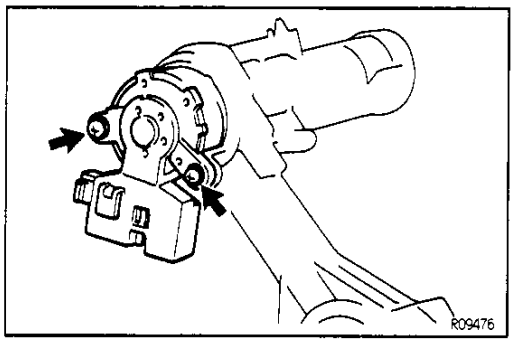

5. IF NECESSARY, REPLACE IGNITION SWITCH

(a) Remove the 2 screws.

(b) Tighten the 2 screws.

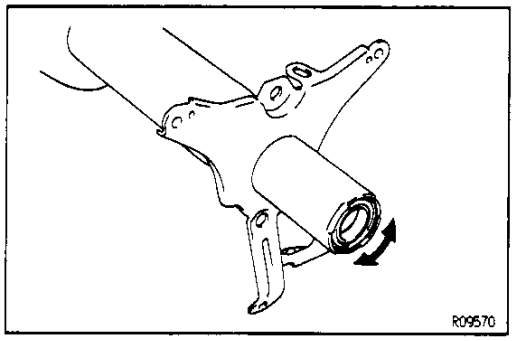

6. INSPECT COLUMN TUBE BEARING

Check the bearing rotation condition and check for abnormal noise.

If the bearing is worn or damaged, replace the column tube.

SR

STEERING COLUMN ASSEMBLY

SR086-01

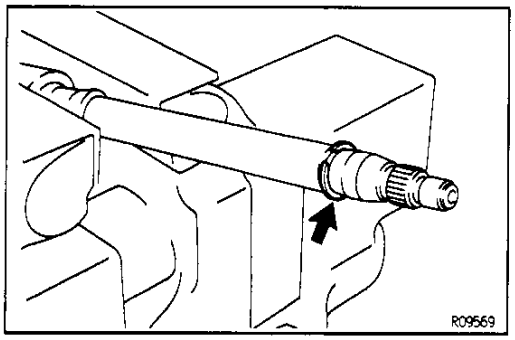

1. COAT WITH MOLYBDENUM DISULPHIDE LITHIUM BASE GREASE (See page SR–10)

2. INSTALL MAIN SHAFT ASSEMBLY

(a) Secure the shaft assembly in a vise.
NOTICE: Do not tighten the vise too tight.

(b) Using snap ring pliers, install a new snap ring.

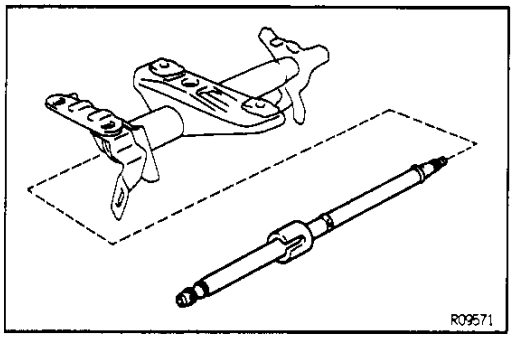

(c) Install the shaft assembly to the column tube.

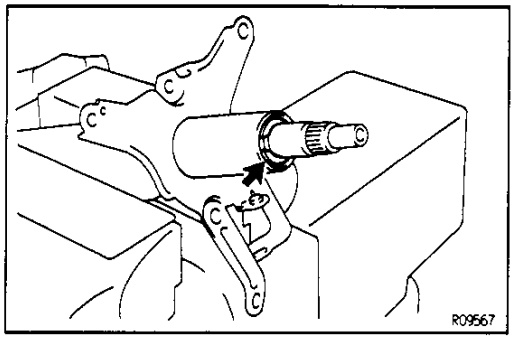

(d) Secure the column tube in a vise.
NOTICE: Do not tighten the vise too tight.

(e) Using snap ring pliers, install a new snap ring.

Downloaded from www.Manualslib.com manuals search engine

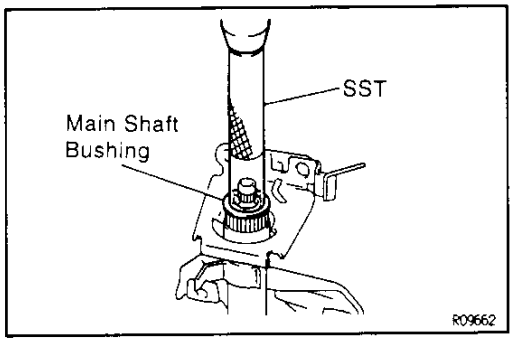

3. INSTALL MAIN SHAFT BUSHING

Using SST, press the bushing into the tube.

SST 09612–22011

NOTICE: Gently press the plastic bushing into the tube.

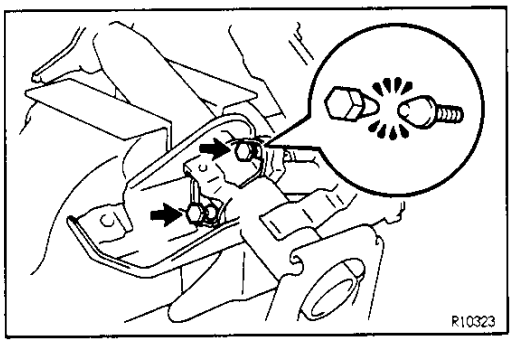

4. INSTALL COLUMN UPPER BRACKET AND COLUMN UPPER CLAMP

(a) Secure the column tube in a vise.

NOTICE: Do not tighten the vise too tight.

(b) Tighten 2 new tapered–head bolts until the bolt head breaks off.

SR

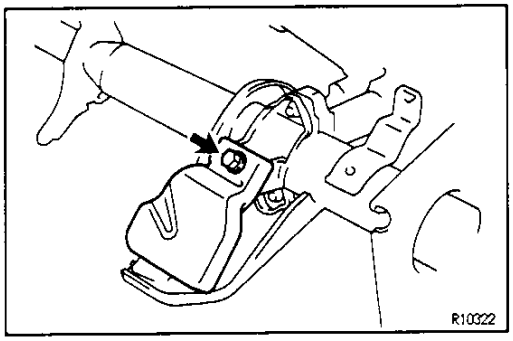

5. INSTALL COLUMN PROTECTOR

Torque the bolt.

Torque: 4.9 N·m (50 kgf·cm, 43 in.·lbf)

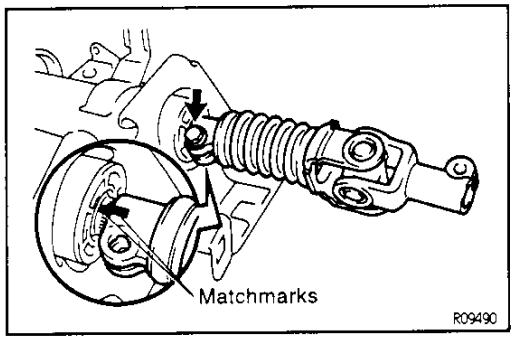

6. INSTALL INTERMEDIATE SHAFT

(a) Align the matchmarks on the intermediate shaft and control valve shaft, and install the shaft.

(b) Torque the bolt.

Torque: 35 N·m (360 kgf·cm, 26 ft·lbf)

7. INSTALL IGNITION KEY CYLINDER ILLUMINATION

Downloaded from www.Manualslib.com manuals search engine

TILT STEERING COLUMN
COMPONENTS

SR0OR-02

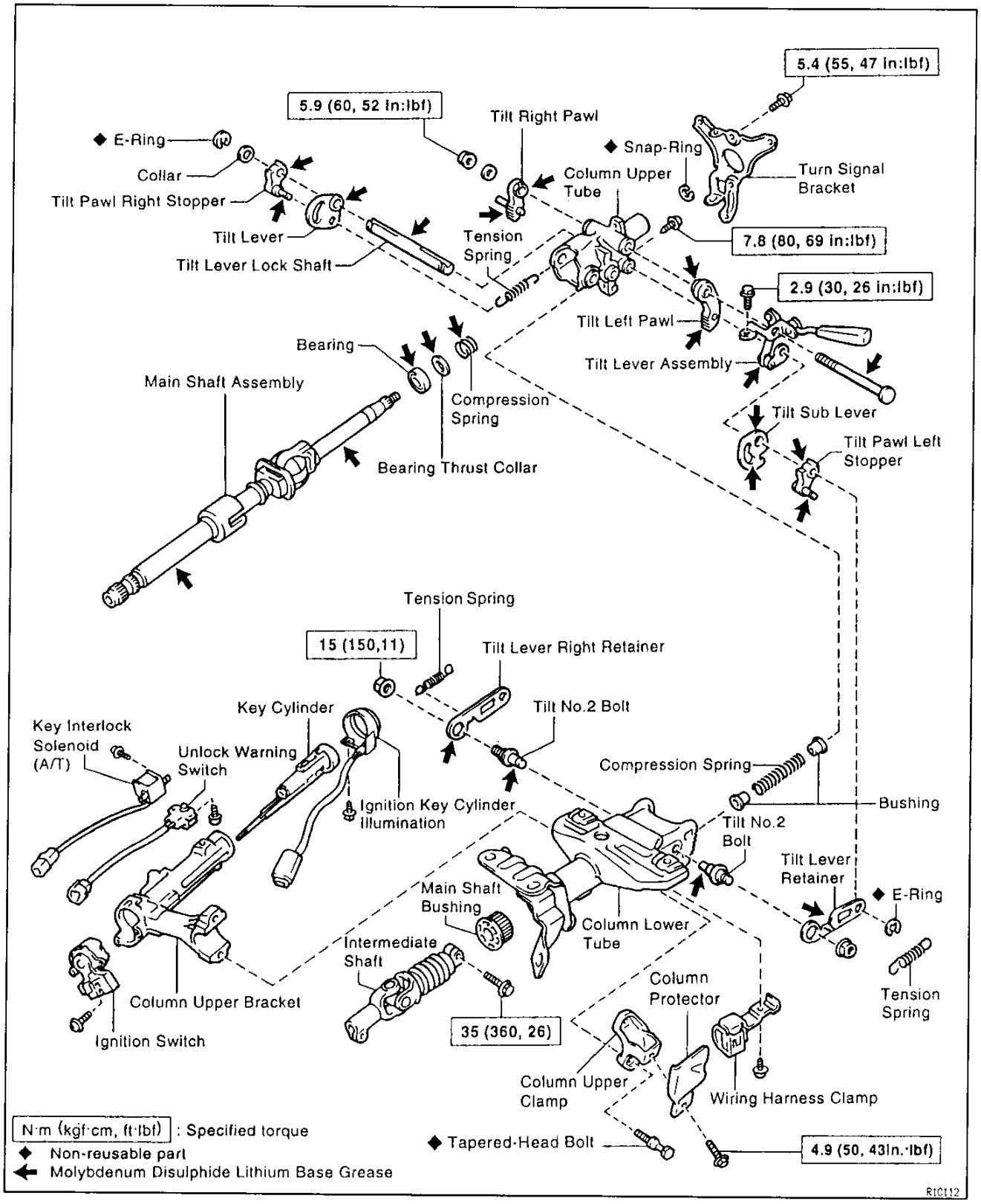

SR

Downloaded from www.Manualslib.com manuals search engine

SR008-02

STEERING COLUMN DISASSEMBLY

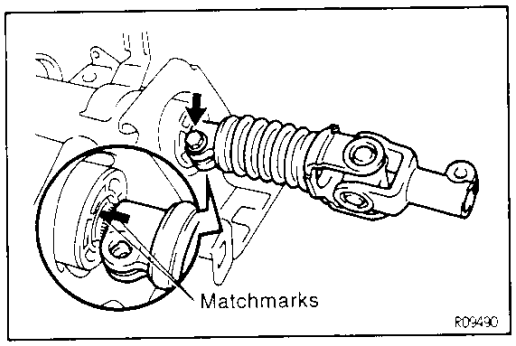

1. REMOVE IGNITION KEY CYLINDER ILLUMINATION

2. REMOVE INTERMEDIATE SHAFT

(a) Remove the bolt.

(b) Shift the shaft.

(c) Place matchmarks on the intermediate shaft and main shaft.

(d) Remove the shaft.

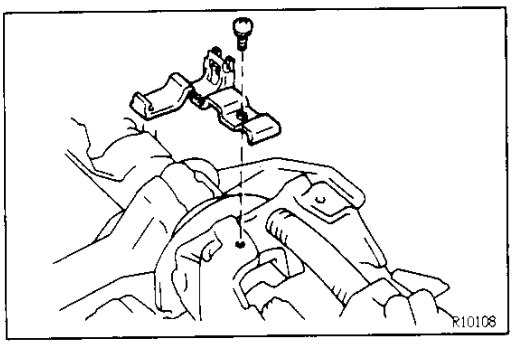

3. REMOVE WIRING HARNESS CLAMP

SR

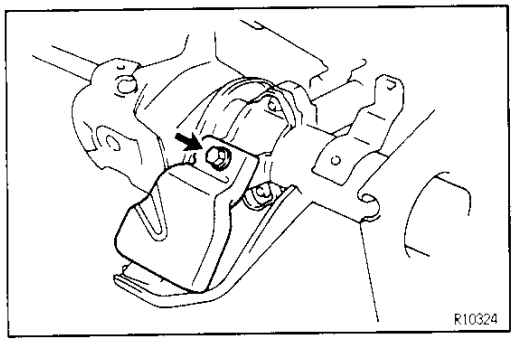

4. REMOVE COLUMN PROTECTOR

Remove the bolt.

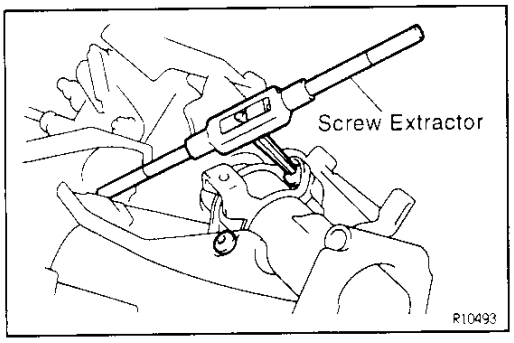

5. REMOVE COLUMN UPPER BRACKET AND COLUMN UPPER CLAMP

(a) Secure the steering column assembly in a vise.
NOTICE: Do not tighten the vise too tight.

(b) Using a centering punch, mark the center of the 2 tapered—head bolts.

(c) Using a 4 — 5 mm (0.16 — 0.20 in.) drill, drill into the 2 bolts.

(d) Using a screw extractor, remove the 2 bolts.

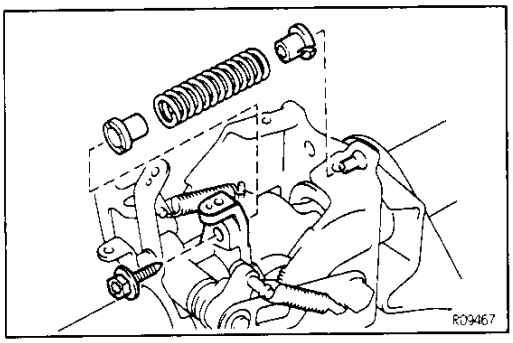

6. REMOVE COMPRESSION SPRING

(a) Using a torx socket wrench, remove the torx bolt.

(b) Remove the spring and 2 bushings from the spring.

Downloaded from www.Manualslib.com manuals search engine

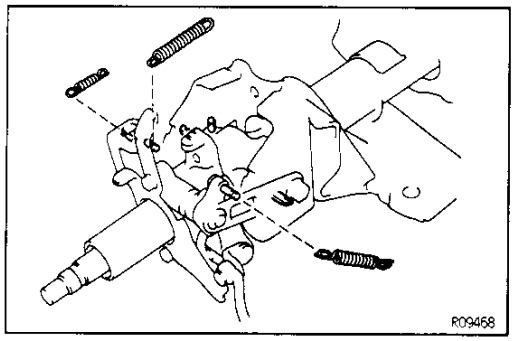

7. REMOVE 3 TENSION SPRINGS

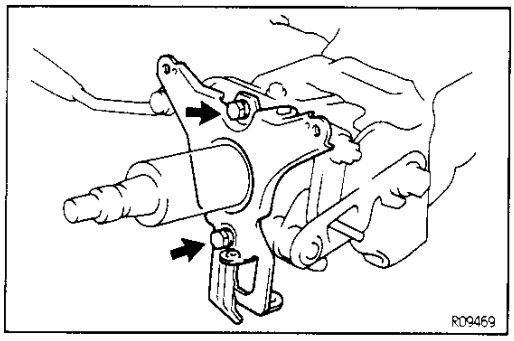

8. REMOVE TURN SIGNAL BRACKET
Remove the 2 bolts.

SR

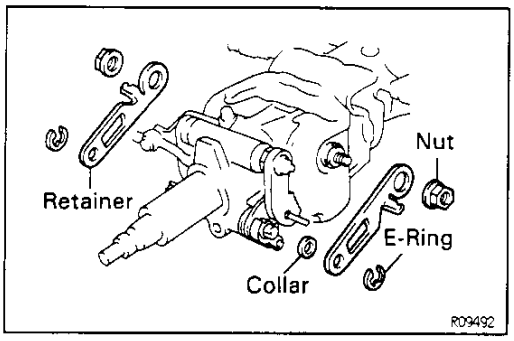

9. REMOVE 2 TILT LEVER RETAINERS
Remove the nut and E—ring.

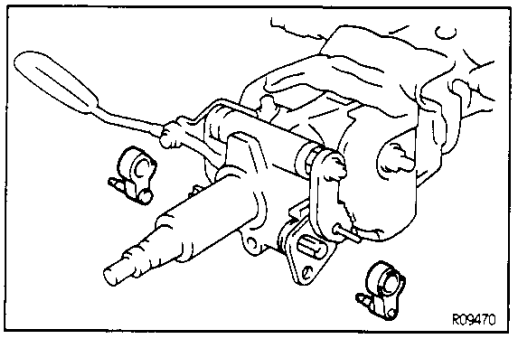

10. REMOVE RIGHT AND LEFT TILT PAWL STOPPERS

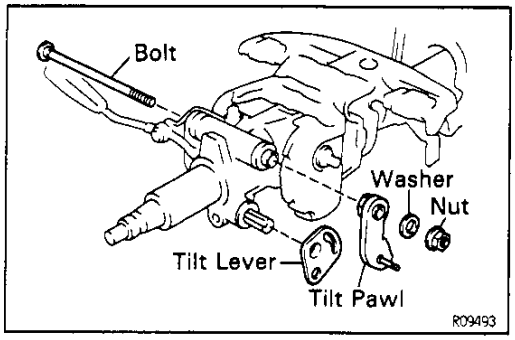

11. REMOVE TILT RIGHT PAWL AND TILT LEVER
Remove the nut, washer and bolt.

Downloaded from www.Manualslib.com manuals search engine

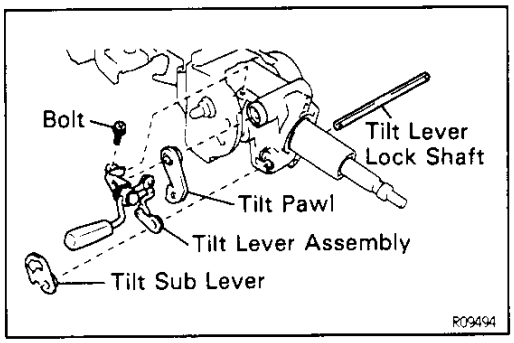

12. REMOVE TILT LEFT PAWL, TILT SUB LEVER, TILT LEVER ASSEMBLY AND TILT LEVER LOCK SHAFT

Remove the bolt.

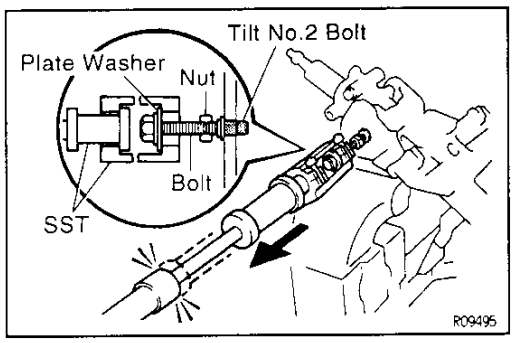

13. REMOVE COLUMN UPPER TUBE WITH MAIN SHAFT ASSEMBLY

(a) Secure the column lower tube in a vise.
NOTICE: Do not tighten the vise too tight.

(b) Set SST, the nut (10 mm nominal diameter, 1.25 mm pitch), plate washer (36 mm outer diameter) and bolt (10 mm nominal diameter, 1.25 mm pitch, 50 mm length), as shown in the illustration.
SST 09910–00015 (09911–00011)
(09912–00010)

Reference
Nut: 90170–10004
Plate washer: 90201–10201
Bolt: 91111–51050

(c) Remove the 2 tilt No.2 bolts by using the sliding hammer on SST.

SR

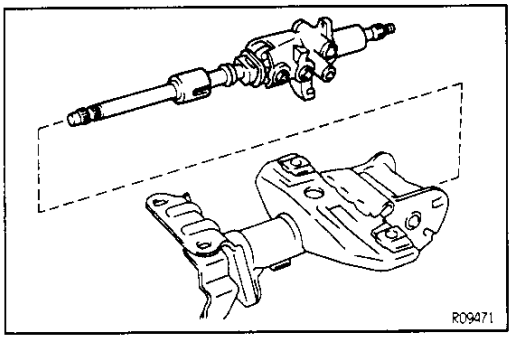

(d) Remove the upper tube with the shaft assembly from the lower tube.

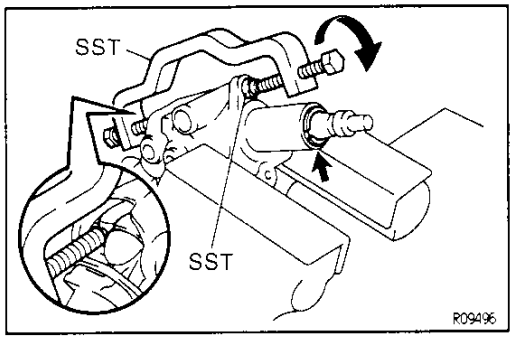

14. REMOVE MAIN SHAFT ASSEMBLY

(a) Secure the column upper tube in a vise.
NOTICE: Do not tighten the vise too tight.

(b) Using SST, compress the compression spring.
SST 09950–40010 (09957–04010)
(09958–04010)
NOTICE: Do not bend the universal joint of the shaft assembly more than 20°.

(c) Using snap ring pliers, remove the snap ring.

Downloaded from www.Manualslib.com manuals search engine

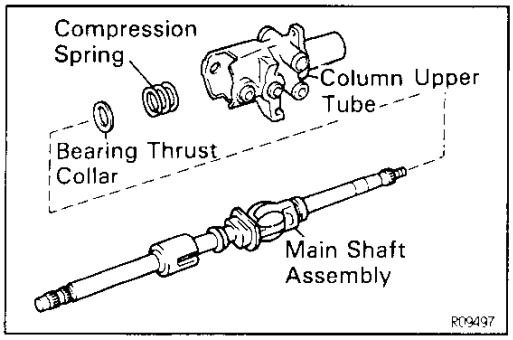

(d) Remove the shaft assembly from the upper tube.
(e) Remove the spring and bearing thrust collar from the shaft assembly.

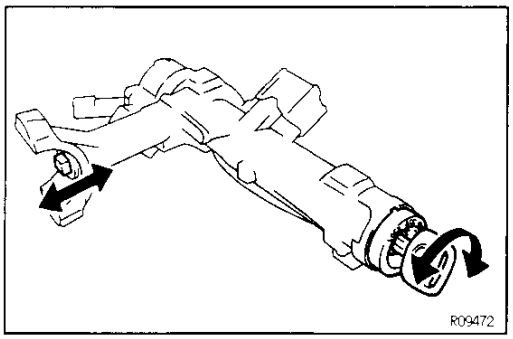

STEERING COLUMN INSPECTION AND REPLACEMENT

SR0QT-02

1. INSPECT KEY CYLINDER

Check that the steering lock mechanism operates properly.

SR

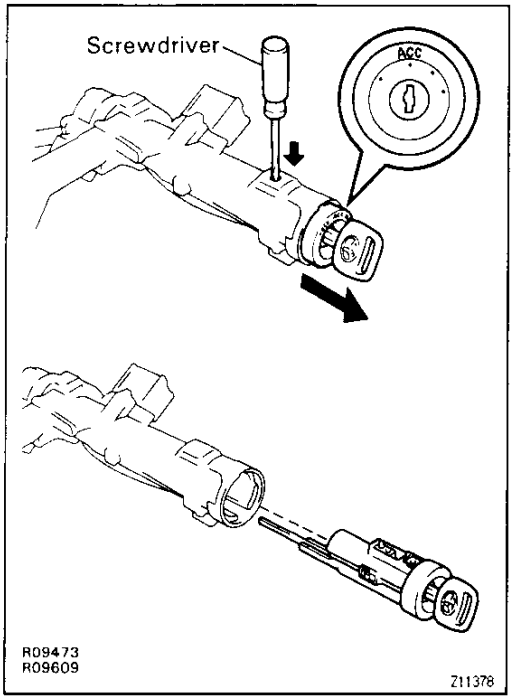

2. IF NECESSARY, REPLACE KEY CYLINDER

(a) Place the ignition key at the ACC position.
(b) Push down the stop pin with a thin rod, and pull out the cylinder.
(c) Install a new cylinder.
HINT: Make sure the ignition key is at the ACC position.

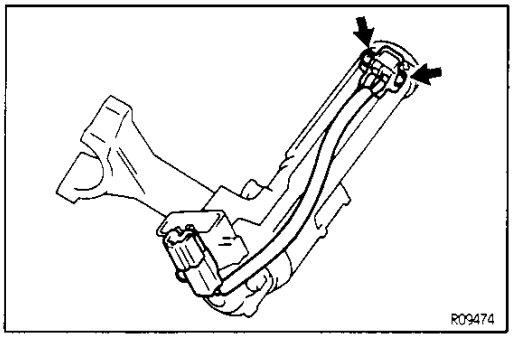

3. IF NECESSARY, REPLACE UNLOCK WARNING SWITCH

(a) Remove the 2 screws.
(b) Tighten the 2 screws.

Downloaded from www.Manualslib.com manuals search engine

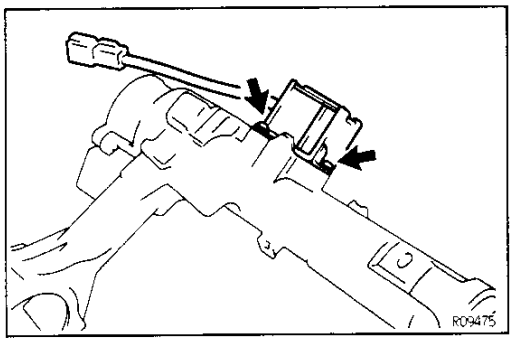

4. IF NECESSARY, REPLACE KEY INTERLOCK SOLENOID

A/T:

(a) Remove the 2 screws.

(b) Tighten the 2 screws.

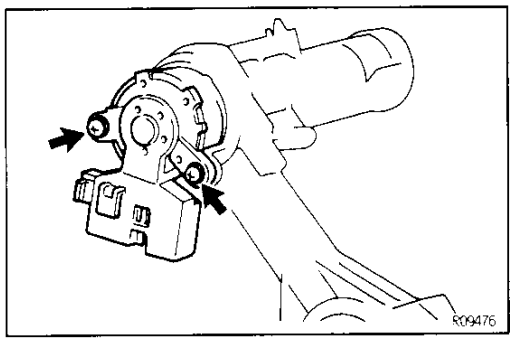

5. IF NECESSARY, REPLACE IGNITION SWITCH

(a) Remove the 2 screws.

(b) Tighten the 2 screws.

SR

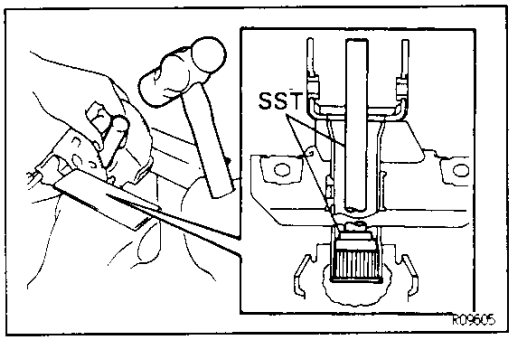

6. IF NECESSARY, REPLACE MAIN SHAFT BUSHING

(a) Secure the column lower tube in a vise.

NOTICE: Do not tighten the vise too tight.

(b) Using SST and a hammer, tap out the bushing.

SST 09620–30010 (09624–30010)
(09631–00020)

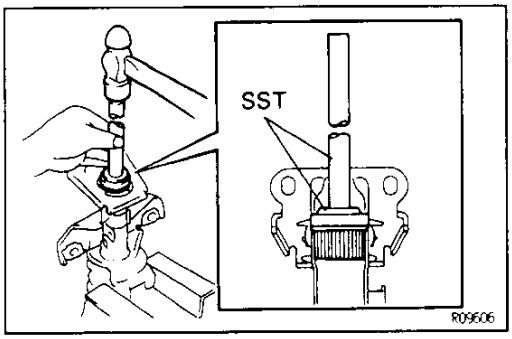

(c) Using SST and a hammer, tap in a new bushing.

SST 09620–30010 (09626–30010)
(09631–00020)

Downloaded from www.Manualslib.com manuals search engine

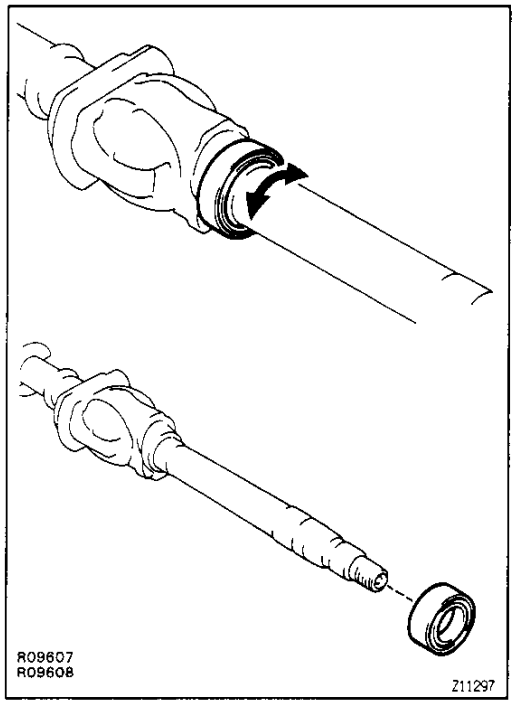

7. **INSPECT MAIN SHAFT BEARING**
Check the bearing rotation condition and check for abnormal noise.
If the bearing is worn or damaged, replace the bearing.

SR

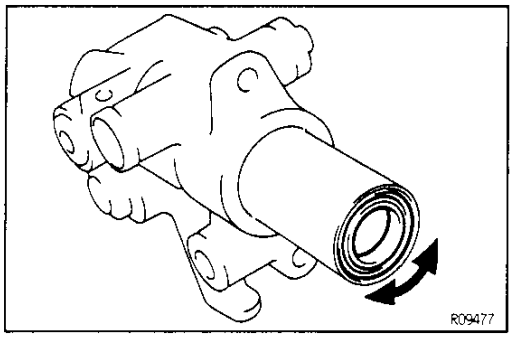

8. **INSPECT COLUMN UPPER TUBE BEARING**
Check the bearing rotation condition and check for abnormal noise.
If the bearing is worn or damaged, replace the column upper tube.

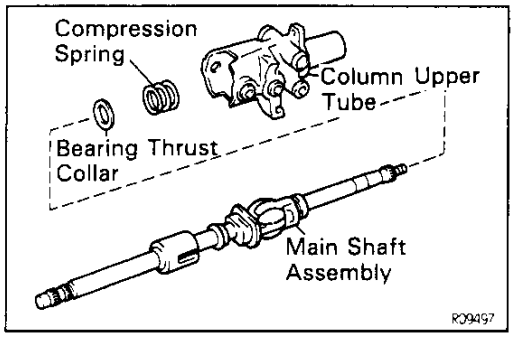

STEERING COLUMN ASSEMBLY

SR096-01

1. **COAT WITH MOLYBDENUM DISULPHIDE LITHIUM BASE GREASE (See page SR–16)**
2. **INSTALL MAIN SHAFT ASSEMBLY**

(a) Install the bearing thrust collar and compression spring to the shaft assembly.
(b) Install the shaft assembly into the column upper tube.

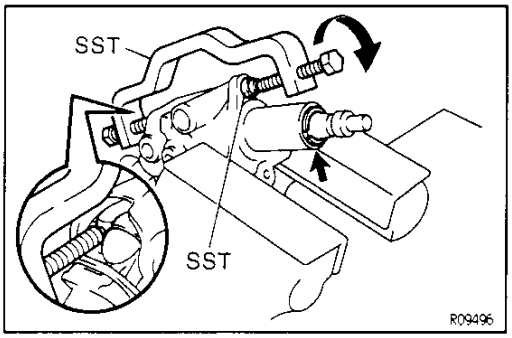

(c) Secure the upper tube in a vise.
NOTICE: Do not tighten the vise too tight.
(d) Using SST, compress the spring.
SST 09950–40010 (09957–04010)
(09958–04010)
NOTICE: Do not bend the universal joint of the main shaft assembly more than 20°.
(e) Using snap ring pliers, install a new snap ring.

Downloaded from www.Manualslib.com manuals search engine

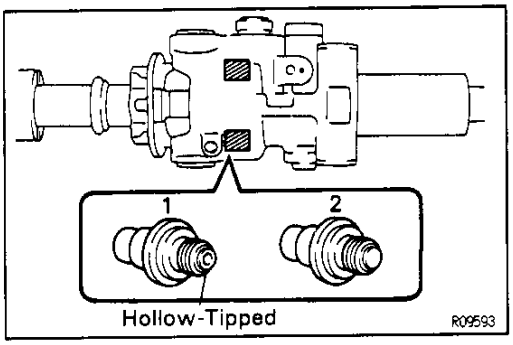

3. SELECT TILT NO.2 BOLTS

Select the bolt with the hollow–tipped thread end when the column upper tube mark is 1, and the bolt with the plain thread end when the mark is 2.

NOTICE: Select the bolt type to match each number marked in the squares on the upper tube.

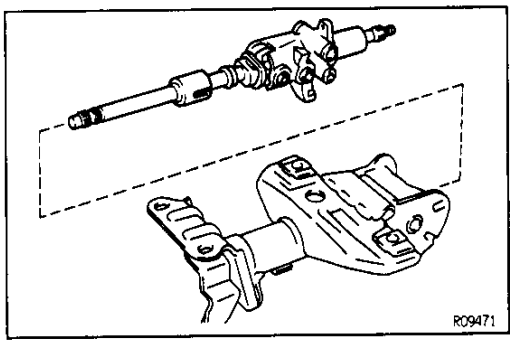

4. INSTALL COLUMN UPPER TUBE WITH MAIN SHAFT ASSEMBLY

(a) Install the upper tube with the shaft assembly into the lower tube.

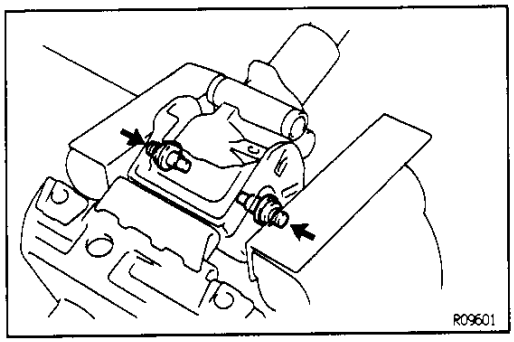

(b) Using a vise, press in the 2 tilt No.2 bolts.

NOTICE: Do not tighten the vise too tight.

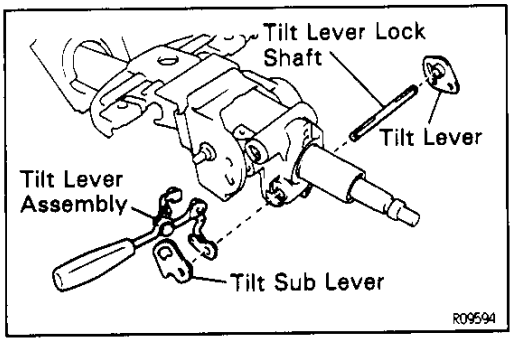

5. INSTALL TILT LEVER LOCK SHAFT, TILT LEVER ASSEMBLY, TILT SUB LEVER AND TILT LEVER

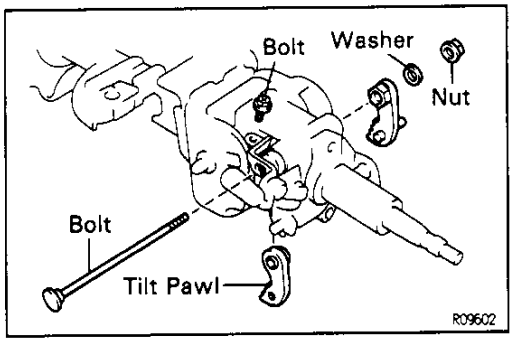

6. INSTALL RIGHT AND LEFT TILT PAWLS

(a) Temporarily tighten the nut.

HINT: Install the pin of the pawls into the long hole of the tilt lever and tilt sub lever.

(b) Tighten the tilt lever assembly set bolt.

Torque: 2.9 N·m (30 kgf·cm, 26 in.·lbf)

Downloaded from www.Manualslib.com manuals search engine

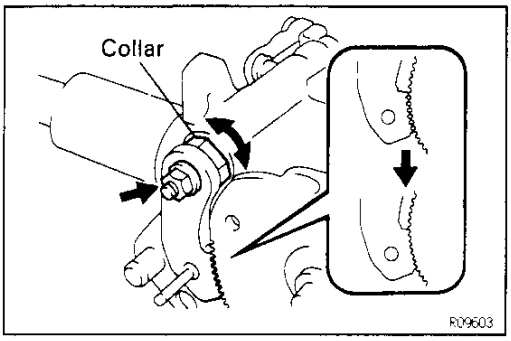

7. ENGAGE AND ADJUST RIGHT AND LEFT TILT PAWLS

(a) Engage the left pawl to the center of the ratchet.

(b) Using a spanner (17 mm), while turning the right pawl side collar, completely engage the right pawl to the ratchet.

NOTICE: Do not turn the collar after the right pawl is engaged.

(c) Torque the nut.

Torque: 5.9 N·m (60 kgf·cm, 52 in.·lbf)

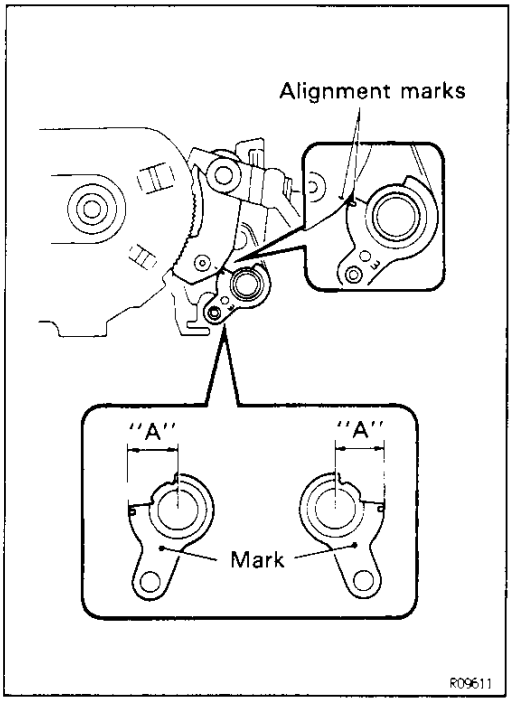

8. SELECT RIGHT AND LEFT TILT PAWL STOPPERS

(a) With the tilt pawl and ratchet engaged, install the pawl stoppers.

(b) Check that the alignment marks on the pawl stopper and pawl align when the pawl stopper is lightly rotated to the pawl side.

If the alignment marks do not align, select the pawl stoppers according to the following table.

Right pawl stopper	Left pawl stopper	Dimension "A" mm (in.)
1	A	12.68 – 12.74 (0.4992 – 0.5016)
2	B	12.61 – 12.67 (0.4965 – 0.4988)
3	C	12.54 – 12.60 (0.4937 – 0.4961)
4	D	12.47 – 12.53 (0.4909 – 0.4933)
5	E	12.40 – 12.46 (0.4882 – 0.4906)
6	F	12.33 – 12.39 (0.4854 – 0.4878)
7	G	12.26 – 12.32 (0.4827 – 0.4850)

(c) After selecting the pawl stoppers, check that on both sides the pawl and ratchet are fully engaged.

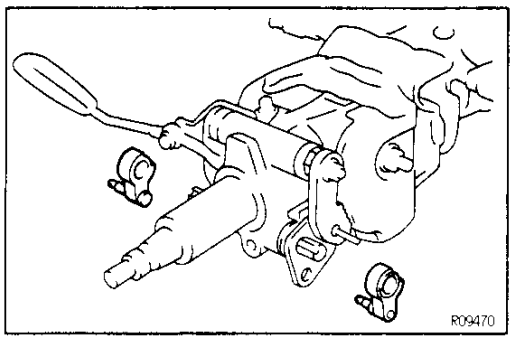

9. INSTALL RIGHT AND LEFT TILT PAWL STOPPERS

Downloaded from www.Manualslib.com manuals search engine

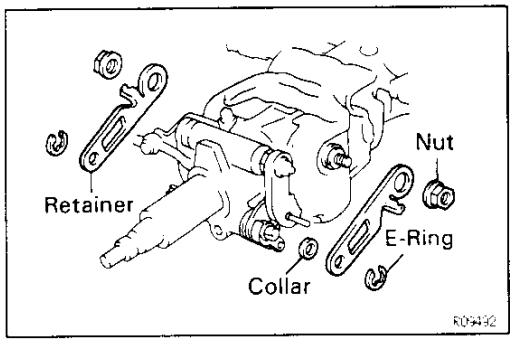

10. INSTALL 2 TILT LEVER RETAINERS

(a) Install a new E–ring.

(b) Torque the nut.
Torque: 15 N·m (150 kgf·cm, 11 ft·lbf)

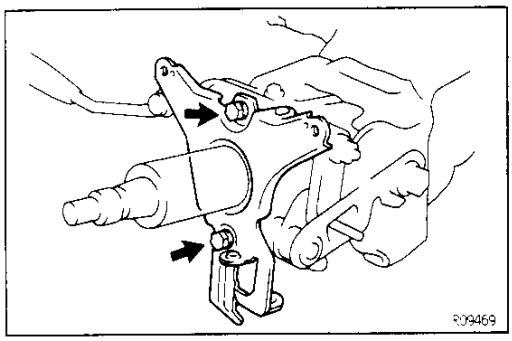

11. INSTALL TURN SIGNAL BRACKET

Torque the 2 bolts.
Torque: 5.4 N·m (55 kgf·cm, 47 in.·lbf)

SR

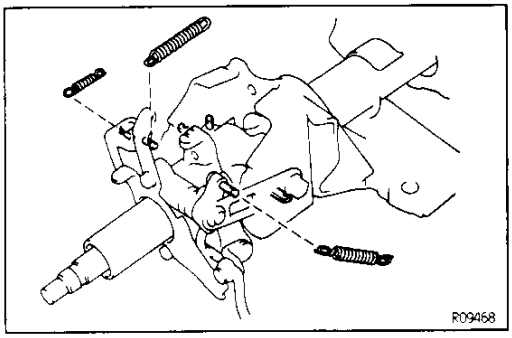

12. INSTALL 3 TENSION SPRINGS

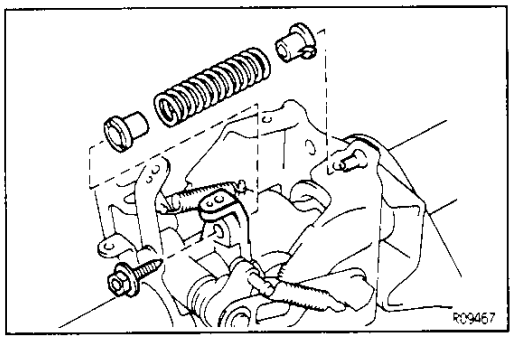

13. INSTALL COMPRESSION SPRING

(a) Install the 2 bushings to the spring.

(b) Using a torx socket wrench, torque the torx bolt.
Torque: 7.8 N·m (80 kgf·cm, 69 in.·lbf)

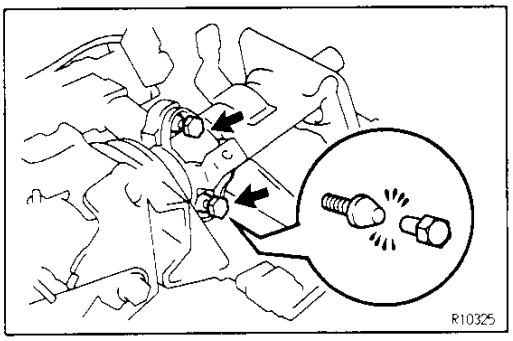

14. INSTALL COLUMN UPPER BRACKET AND COLUMN UPPER CLAMP

(a) Secure the steering column assembly in a vise.
NOTICE: Do not tighten the vise too tight.

(b) Tighten 2 new tapered–head bolts until the bolt head breaks off.

Downloaded from www.Manualslib.com manuals search engine

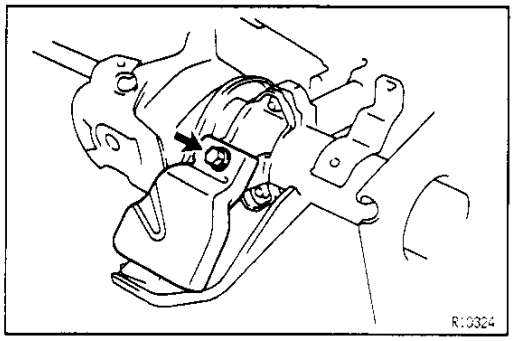

15. INSTALL COLUMN PROTECTOR

Torque the bolt.

Torque: 4.9 N·m (50 kgf·cm, 43 in.·lbf)

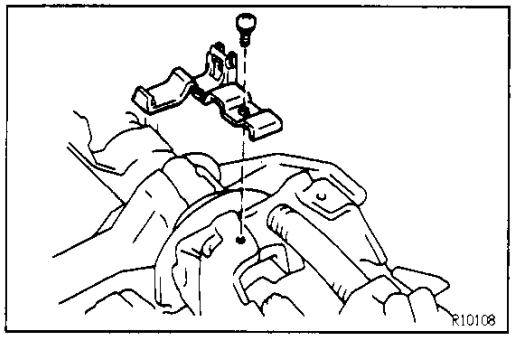

16. INSTALL WIRING HARNESS CLAMP

Tighten the screw.

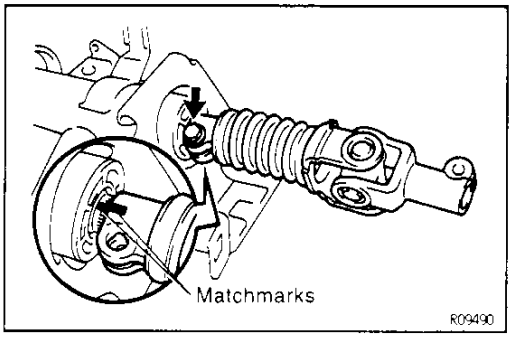

17. INSTALL INTERMEDIATE SHAFT

(a) Align the matchmarks on the intermediate shaft and main shaft, and install the shaft.

(b) Torque the bolt.

Torque: 35 N·m (360 kgf·cm, 26 ft·lbf)

18. CHECK TILT STEERING OPERATION

(a) Check that there is no axial play at the end of the main shaft.

(b) With the main shaft in the neutral position, pull the tilt lever and check that the main shaft rises to the uppermost position.

(c) Lower the main shaft, and check that it locks in the lowermost position.

Downloaded from www.Manualslib.com manuals search engine

POWER STEERING

DESCRIPTION

PRINCIPLES OF POWER STEERING

Power steering is a hydraulic device which utilizes engine power to reduce steering effort. Consequently, the engine is used to drive a pump to develop fluid pressure, and this pressure acts on a piston within the power cylinder so that the piston assists the rack effort. The amount of this assistance depends on the extent of pressure acting on the piston. Therefore, if more steering force is required, the pressure must be raised. The variation in the fluid pressure is accomplished by a control valve which is linked to the main shaft of the steering.

3S-GE:

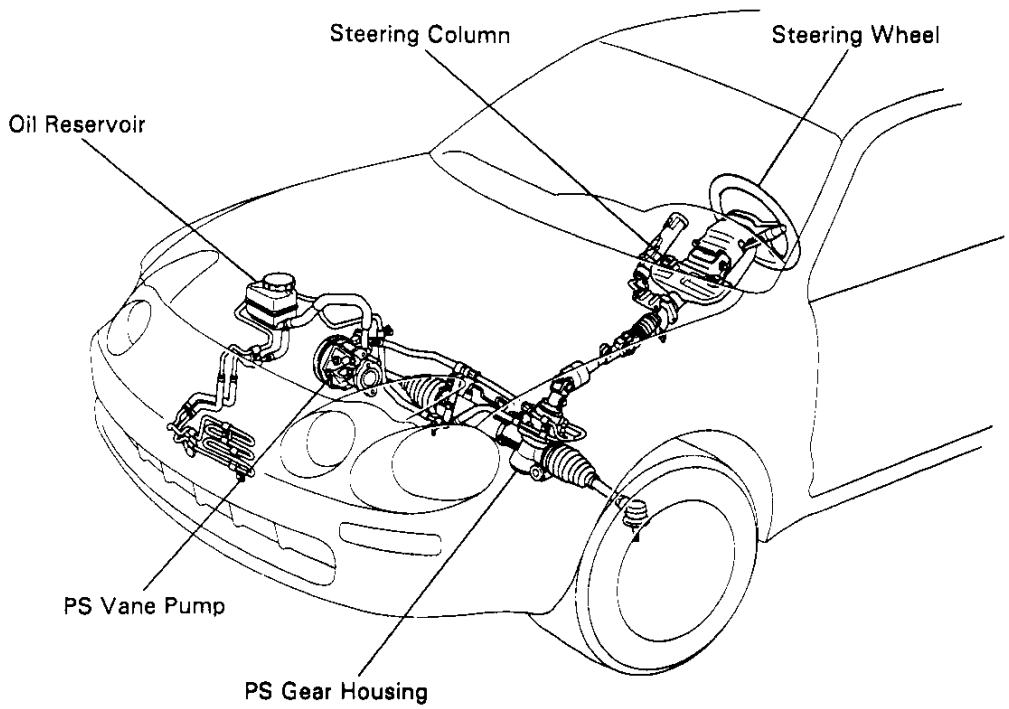

R10077

Downloaded from www.Manualslib.com manuals search engine

SECTIONAL VIEW

PS VANE PUMP
7A-FE:

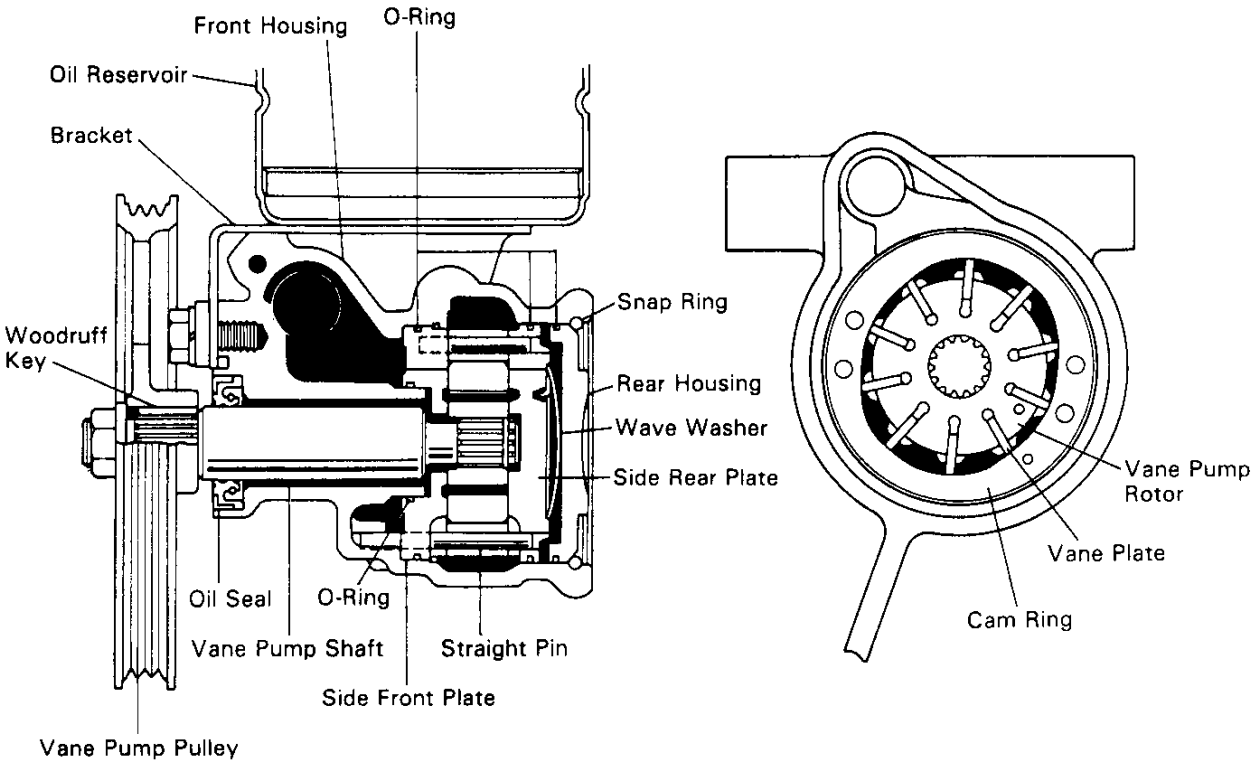

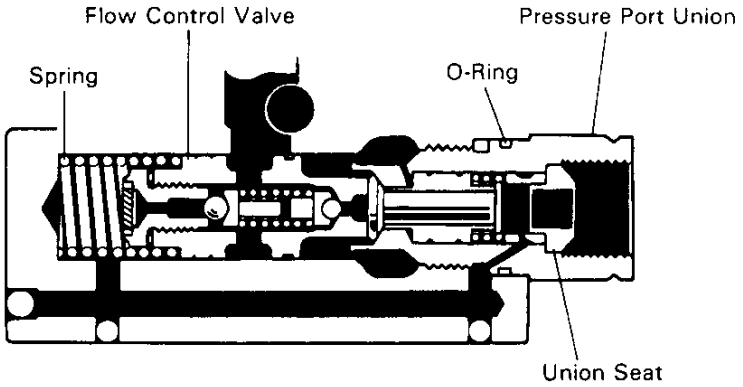

R09645 R09648
R09650

Downloaded from www.Manualslib.com manuals search engine

SECTIONAL VIEW

PS VANE PUMP
3S-GE, 3S-FE, 5S-FE:

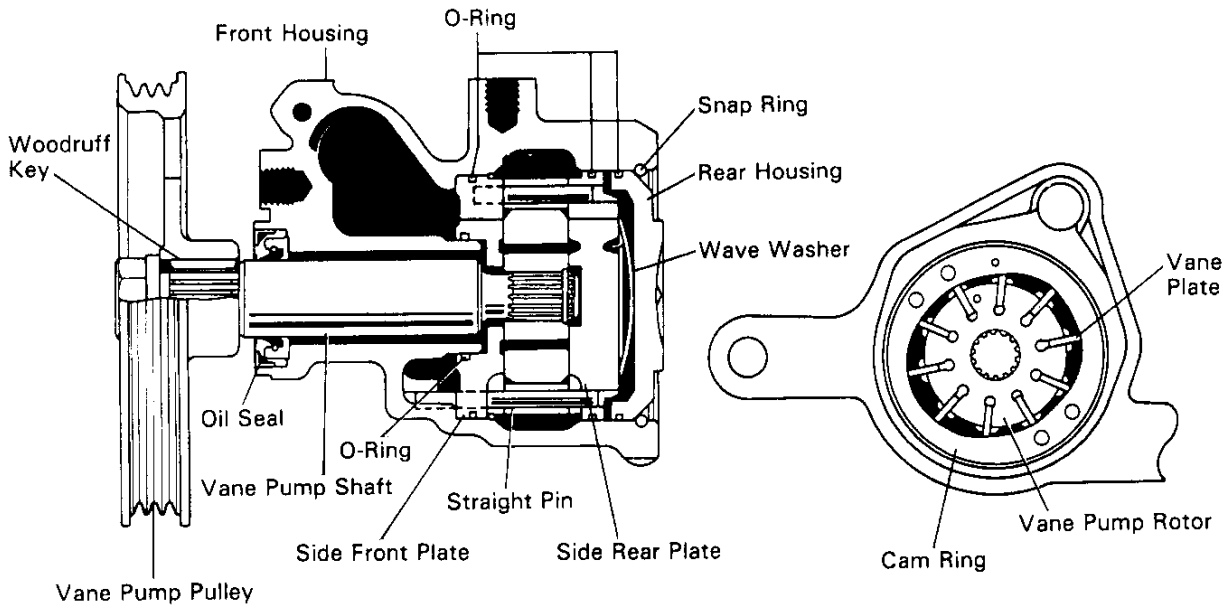

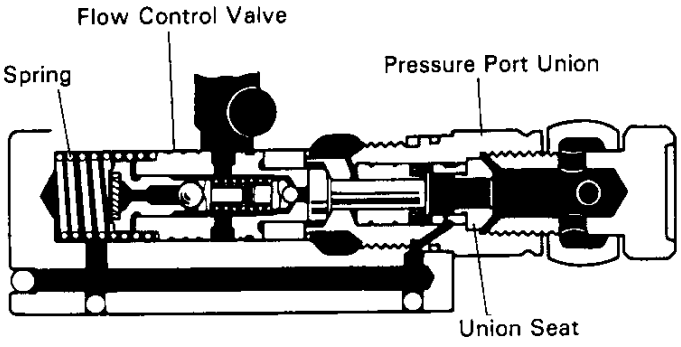

R09646 R09647
R09649

Z11381

SR

Downloaded from www.Manualslib.com manuals search engine

SECTIONAL VIEW

LHD :

* RHD is the symmetrical opposite of LHD

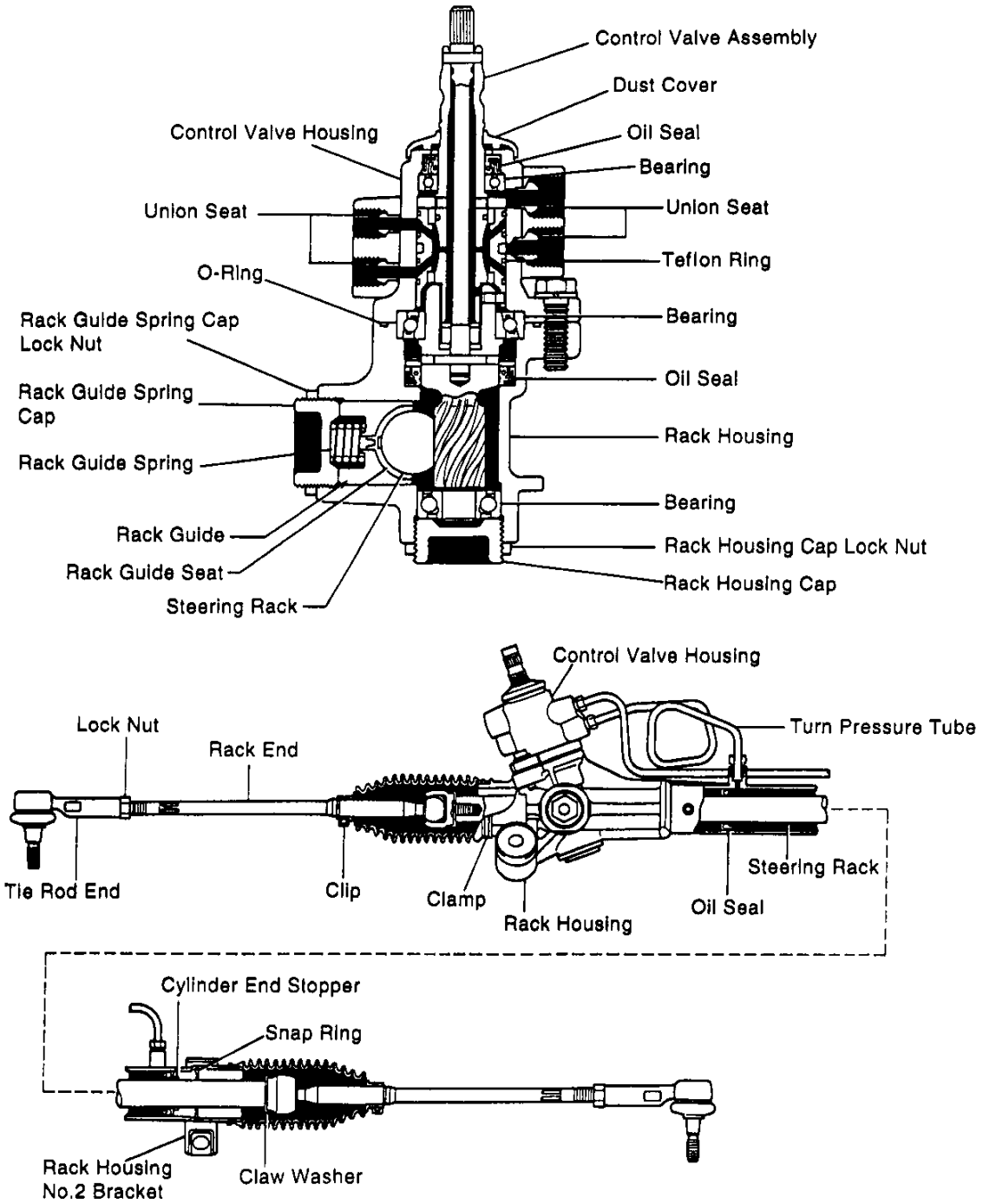

SR

Downloaded from www.Manualslib.com manuals search engine

OPERATION

SR087-01

OPERATION

NEUTRAL (STRAIGHT–AHEAD) POSITION

Fluid from the pump is sent to the control valve. If the control valve is in the neutral position, all the fluid will flow through the control valve into the relief port and back to the pump. At this time, hardly any pressure is created and because the pressure on the cylinder piston is equal on both sides, the piston will not move in either direction.

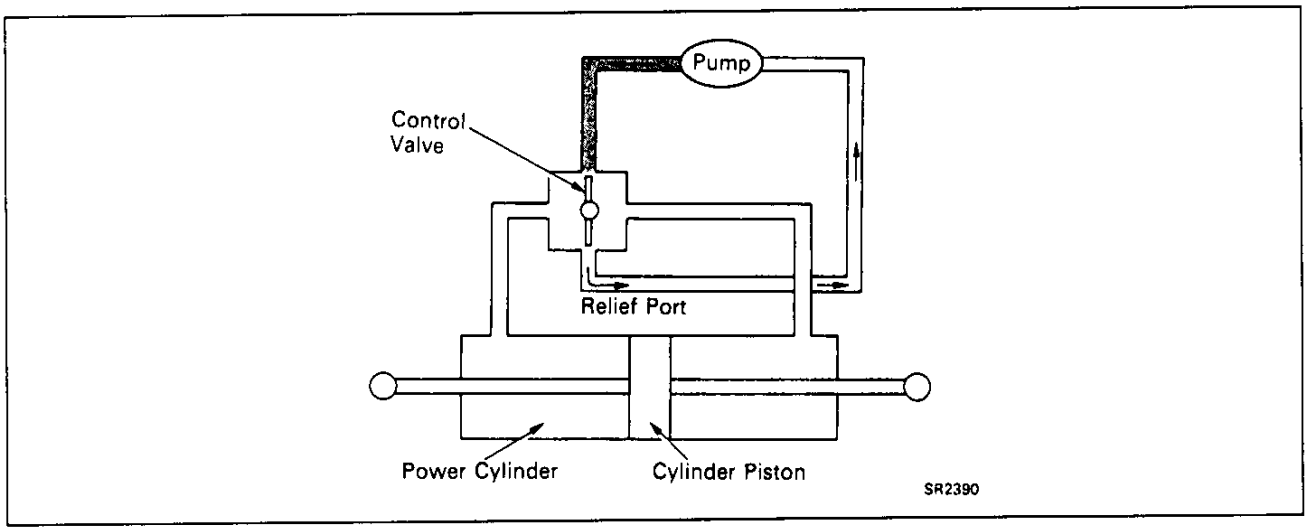

WHEN TURNING

When the steering main shaft is turned in either direction, the control valve also moves, closing one of the fluid passages. The other passage then opens wider, causing a change in fluid flow volume and, at the same time, a differential pressure is created between both sides of the piston. Consequently, the piston moves in the direction of the lower pressure so that the fluid in the cylinder is forced back to the pump through the control valve.

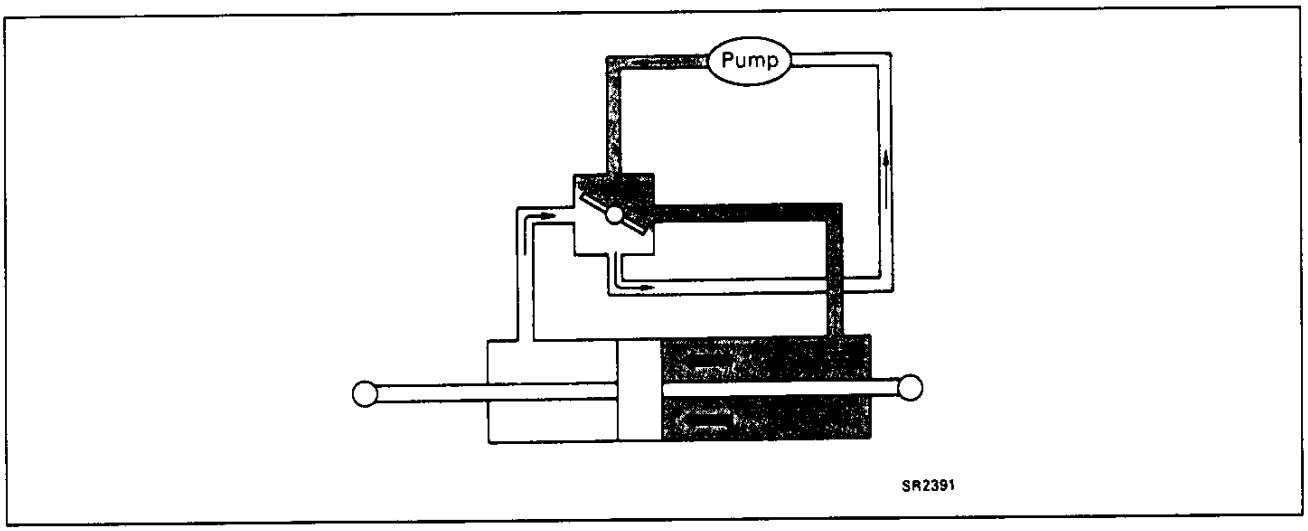

Downloaded from www.Manualslib.com manuals search engine

SERVICE HINT

SR088-01

Troubles with the power steering system are usually concerned with hard steering due to the fact that there is no assistance. In such cases, before attempting to make repairs, it is necessary to determine whether the trouble lies with the pump or with the gear housing. To do this, an on—vehicle inspection can be made by using a pressure gauge.

ON—VEHICLE INSPECTION

Power steering is a hydraulic device and problems are normally due to insufficient fluid pressure acting on the piston. This could be caused by either the pump not producing the specified fluid pressure or the control valve in the gear housing not functioning properly so that the proper fluid pressure cannot be obtained.

If the fault lies with the pump, the same symptoms will generally occur whether the steering wheel is turned fully to the right or left. On the other hand, if the fault lies with the control valve, there will generally be a difference between the amount of assistance when the steering wheel is turned to the left and right, causing harder steering. However, if the piston seal of the power cylinder is worn, there will be a loss of fluid pressure whether the steering wheel is turned to the right or left and the symptoms will be the same for both.

SR

Before performing an on—vehicle inspection, a check must first be made to confirm that the power steering system is completely free of any air. If there is any air in the system, the volume of this air will change when the fluid pressure is raised, causing a fluctuation in the fluid pressure so that the power steering will not function properly. To determine if there is any air in the system, check to see if there is a change of fluid level in the reservoir tank when the steering wheel is turned fully to the right or left.

For example, if there is air in the system, it will be compressed to a smaller volume when the steering wheel is turned, causing a considerable drop in the fluid level. If the system is free of air, there will be very little change in the level even when the fluid pressure is raised. This is because the fluid, being a liquid, does not change volume when compressed. The little change in the fluid level is due to expansion of the hoses between the pump and gear housing when pressure rises.

Also, air in the system will sometimes result in abnormal noises coming from the pump or gear housing when the steering wheel is fully turned in either direction.

This on—vehicle inspection must be performed every time to ensure that the power steering system is working properly after overhauling or repairing the pump or gear housing.

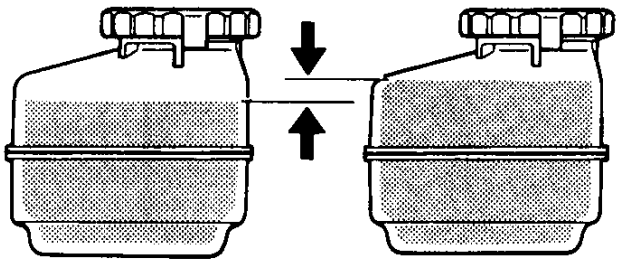

F09643

Downloaded from www.Manualslib.com manuals search engine

VANE PUMP

The main component parts of the vane pump, such as the cam ring, rotor, vanes and flow control valve are high precision parts and must be handled carefully. Also, because this pump produces a very high fluid pressure, O—rings are used for sealing each part. When reassembling the pump, always use new O—rings.

In the flow control valve, there is a relief valve which controls the maximum pressure of the pump. The amount of this maximum pressure is very important; if it is too low, there will be insufficient power steering assistance and if too high, it will have an adverse effect on the pressure hoses, oil seals, etc. If the maximum pressure is either too high or too low due to a faulty relief valve, do not disassemble or adjust the relief valve, but replace the flow control valve as an assembly.

The clearance between the flow control valve and pump body installation hole is very important. After manufacture, the factory measures the size of the installation hole and outer circumference of the flow control valve, and punches a mark accordingly. Therefore, when replacing the flow control valve, be sure to do so with one having the same mark in order to ensure the proper clearance.

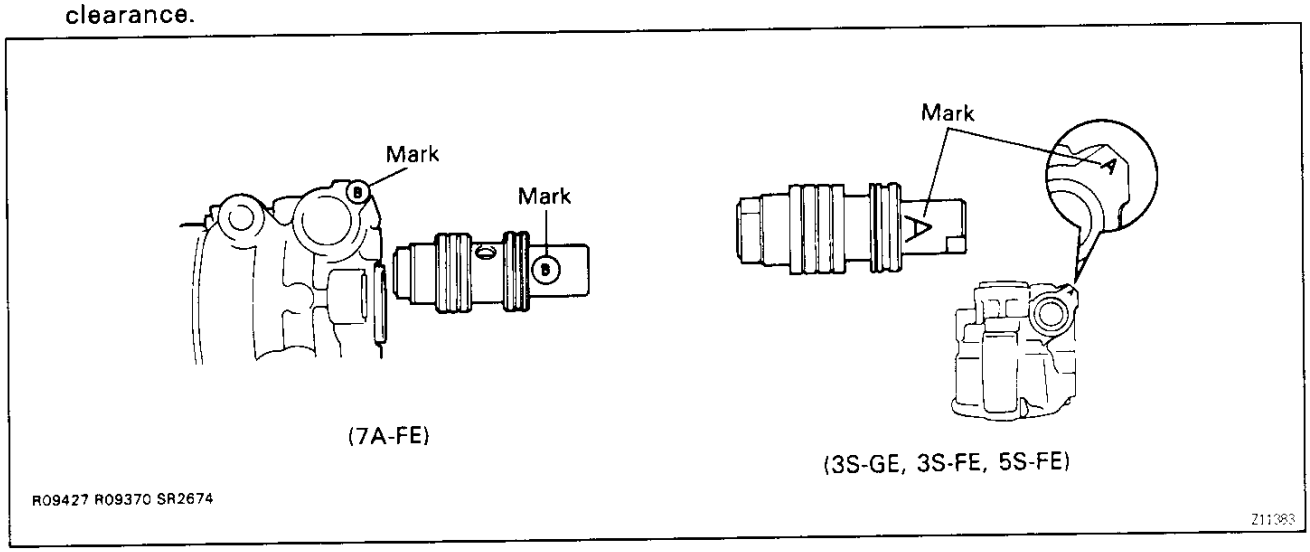

The functional parts of the pump which produce fluid pressure are the cam ring, rotor and vanes, and these should be checked for wear. If the clearance between each is not within standard when reassembling, any worn parts should be replaced.

In this case, the replaced cam ring and rotor should be of the same length (have the same mark), and the vanes should be replaced with those having a length corresponding to that mark, otherwise the proper thrust clearance cannot be obtained. If there is too much thrust clearance, there will be insufficient fluid pressure at low speeds. If there is too little thrust clearance, it may result in seizure of the vanes.

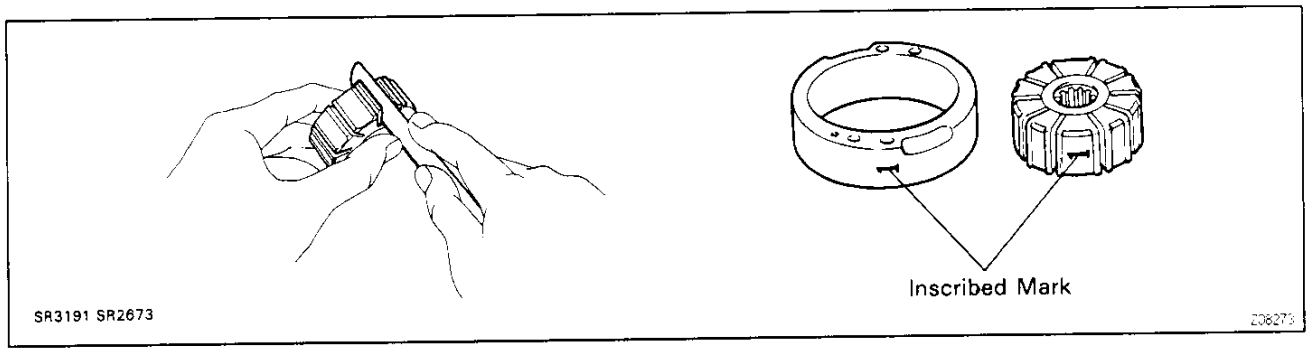

Downloaded from www.Manualslib.com manuals search engine

GEAR HOUSING

If the gear housing is secured directly in a vise during overhaul, there is danger of deforming it, so always first secure it in the SST provided (rack & pinion steering rack housing stand) before placing it in the vise.

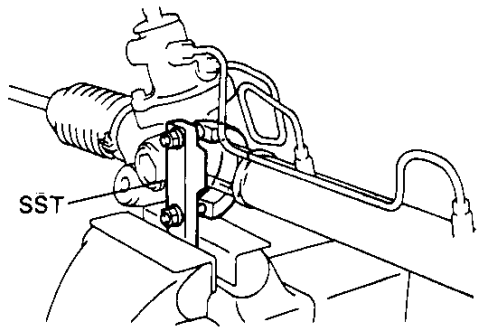

R09502

Z11384

SR

The oil seals on both sides of the power cylinder are for the prevention of leakage of the high pressure fluid which acts on the piston. Always use new oil seals when reassembling and be very careful not to scratch or damage them.
Because of the high pressure, even the slightest scratch will cause fluid leakage, resulting in an inoperative power steering system.
Also, be very careful not to scratch the sliding portion of the rack which makes contact with the oil seals. When removing the rack ends from the rack, it is very easy to cause a burr when holding the tip of the rack with a wrench. Therefore, before assembling the rack, first check the tip for burrs and remove any with an oil stone.
Teflon rings are used for the piston and control valve. These teflon rings are highly durable against wear, but if it is necessary to replace them, be careful not to stretch the new ones.
After installing a teflon ring into its groove, snug it down into the groove before assembly of the cylinder or housing to prevent possible damage.

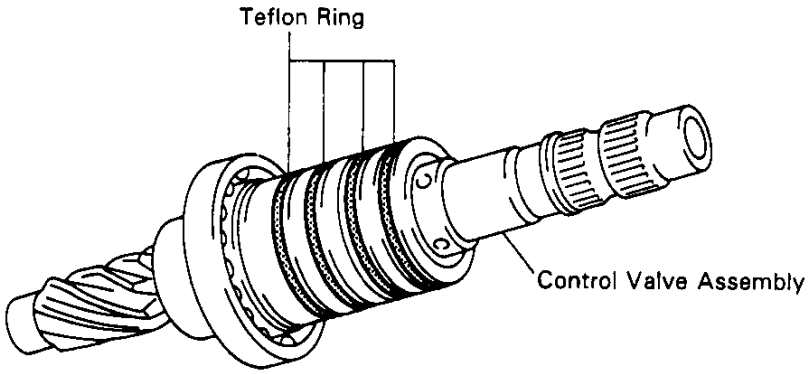

R09671

Downloaded from www.Manualslib.com manuals search engine

As with the rack and pinion type steering, preload is very important. If the preload is not correct, it could result in such trouble as steering wheel play or shimmy or lack of durability, so always make sure that it is correct.

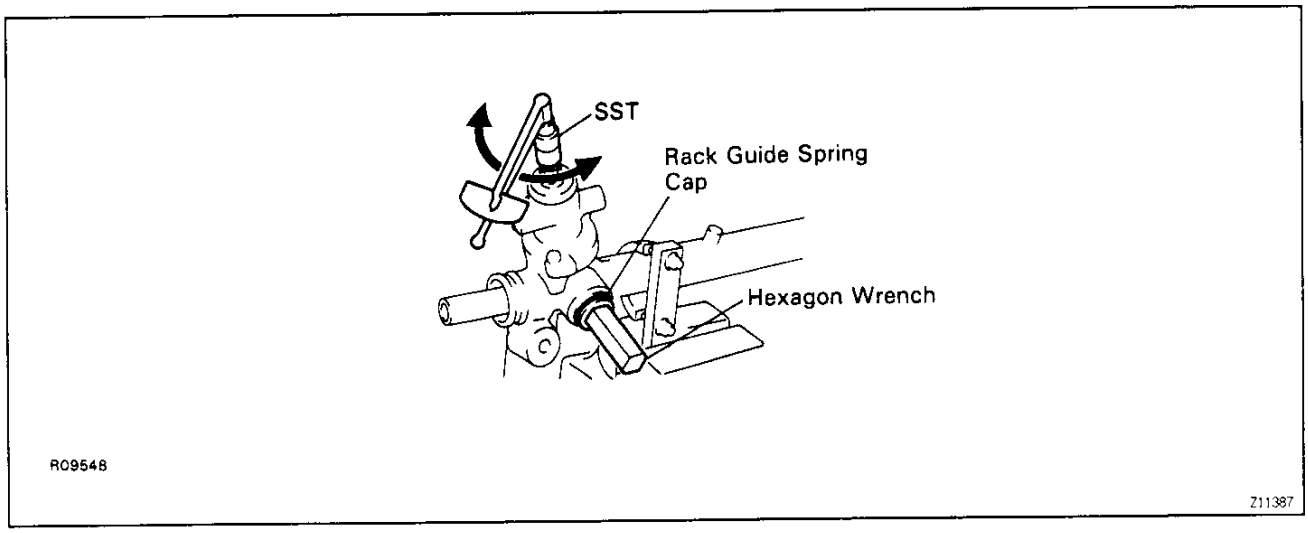

IDLE–UP DEVICE

The pump produces the maximum fluid pressure when the steering wheel is turned fully to the right or left and, at this time, there is a maximum load on the pump which causes a decrease in engine idle rpm. To solve this problem, vehicles are equipped with an idle–up device which acts to raise the engine idle rpm whenever there is a heavy load on the pump.

On EFI engines, when the piston of the air control valve is pushed by fluid pressure, the air valve opens and the volume of air by–passing the throttle valve is increased to regulate engine rpm.

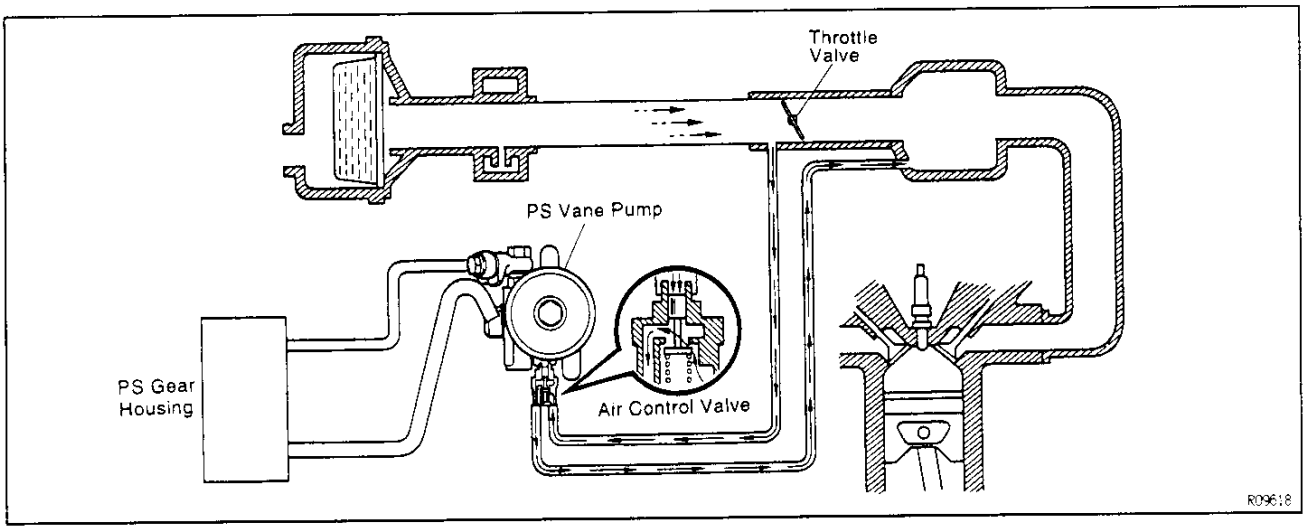

The idle–up device functions to raise engine idle rpm when pump fluid pressure acts on the air control valve, installed to the pump body, to control the flow of air.

Downloaded from www.Manualslib.com manuals search engine

PREPARATION

SST (SPECIAL SERVICE TOOLS)

SR0FV-07

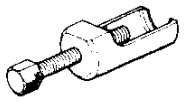	09610-20012	Pitman Arm Puller	Tie rod end
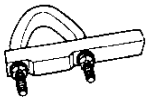	09612-00012	Rack & Pinion Steering Rack Housing Stand	
	09612-30012	Steering Worm Bearing Puller	Rack housing oil seal
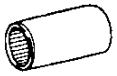	09616-00010	Steering Worm Bearing Adjusting Socket	Checking bearing preload Checking total preload
	09620-30010	Steering Gear Box Replacer Set	
	(09624-30010)	Steering Sector Shaft Oil Seal Replacer	Rack housing oil seal
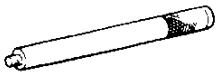	(09631-00020)	Handle	Control valve housing oil seal and bearing Rack housing oil seal
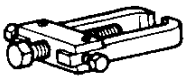	09628-62011	Ball Joint Puller	Camber control arm
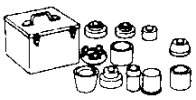	09630-24013	Steering Rack Oil Seal Tool Set	
	(09620-24010)	Valve Cup Oil Seal Remover	Control valve housing oil seal and bearing
	(09620-24020)	Valve Cup Oil Seal Replacer	Control valve housing oil seal
	(09620-24030)	Valve Cup Bearing Replacer	Control valve housing bearing
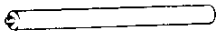	09631-12020	Handle	Rack housing oil seal

Downloaded from www.Manualslib.com manuals search engine

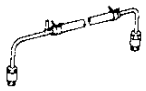	09631–12071	Steering Rack Oil Seal Test Tool	Air tightness test
	09631–20031	Oil Seal "B" Remover	Rack housing oil seal
	09631–20040	Oil Seal "B" Replacer	Rack housing oil seal
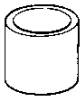	09631–20081	Seal Ring Tool	Control valve teflon rings
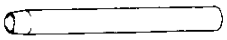	09631–20051	Steering Rack Cover "C"	
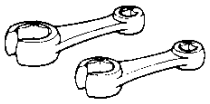	09631–22020	Power Steering Hose Nut 14 x 17 mm Wrench Set	Pressure feed and return tubes Return tube No.1 sub–assembly
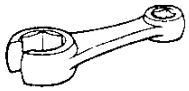	09633–00020	Power Steering Hose Nut Wrench	Turn pressure tube
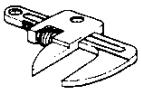	09922–10010	Variable Open Wrench	Rack end Rack housing cap lock nut Rack guide spring cap lock nut
	09960–10010	Variable Pin Wrench Set	Vane pump pulley

SR

Downloaded from www.Manualslib.com manuals search engine

RECOMMENDED TOOLS

SR0FW-05

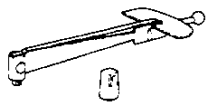	09025-00010	Small Torque Wrench	Measuring vane pump shaft rotating torque Checking bearing preload Checking total preload
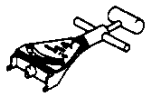	09216-00021	Belt Tension Gauge	Checking drive belt tension
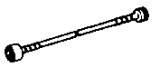	09216-00030	Belt Tension Gauge Cable	Checking drive belt tension
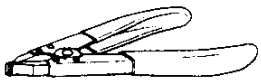	09905-00012	Snap Ring No. 1 Expander	Snap ring
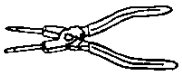	09905-00013	Snap Ring Pliers	Snap ring

SR

LUBRICANT

SR01S-07

Item	Capacity	Classification
Power steering fluid Total	0.8 liters (0.85 US qts, 0.70 Imp.qts)	ATF DEXRON® II

EQUIPMENT

SR0FX-04

Caliper gauge	Measuring pump oil clearance
Calipers	Measuring spring free length
Dial indicator	Checking steering rack runout
Feeler gauge	Measuring rotor groove and vane plate clearance
Micrometer	Measuring pump oil clearance Measuring vane plate
Oil pressure gauge	Measuring PS oil pressure
Torque wrench	

SSM (SPECIAL SERVICE MATERIALS)

SR0FY-02

	08833-00080	Adhesive 1344, THREE BOND 1344, LOCTITE 242 or equivalent	Rack housing cap Rack housing cap lock nut Rack guide spring cap Rack guide spring cap lock nut

Downloaded from www.Manualslib.com manuals search engine

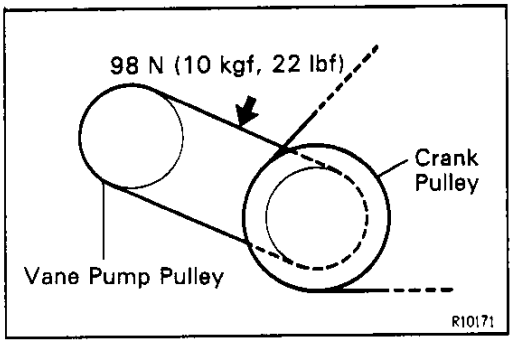

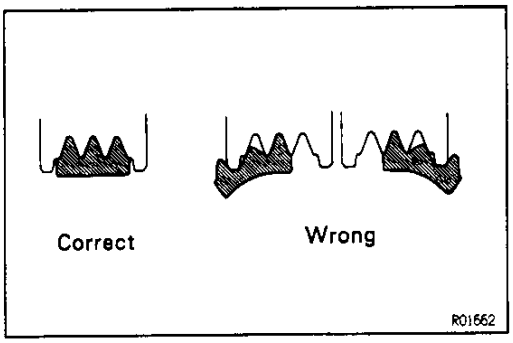

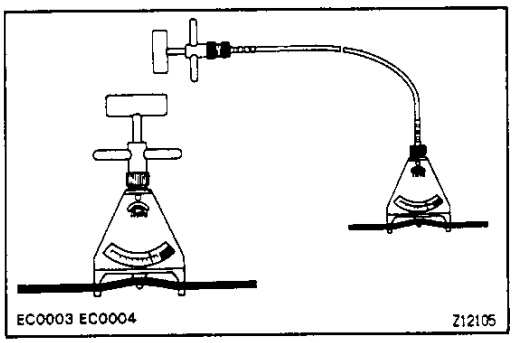

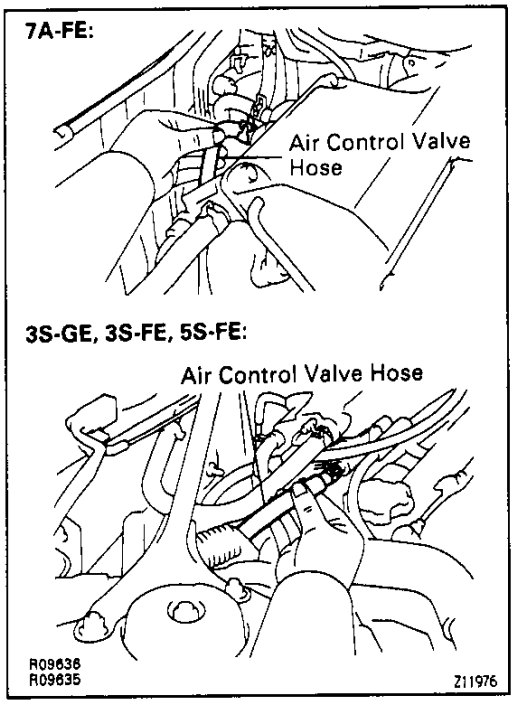

ON–VEHICLE INSPECTION

DRIVE BELT TENSION CHECK

Measure the drive belt deflection.

Drive belt tension: [at 98 N (10 kgf, 22 lbf)]

New belt

7A–FE:	**5–6 mm (0.20–0.24 in.)**
3S–GE, FE:	**8–10 mm (0.31–0.39 in.)**
5S–FE:	**8–10 mm (1.31–0.39 in.)**

Used belt

7A–FE:	**6–8 mm (0.24–0.31 in.)**
3S–GE, FE:	**10–13 mm (0.39–0.51 in.)**
5S–FE:	**10–13 mm (0.39–0.51 in.)**

HINT:

- "New belt" refers to a belt which has been less than 5 minutes on a running engine.
- "Used belt" refers to a belt which has been used on a running engine for 5 minutes or more.
- After installing the drive belt, check that it fits properly in the ribbed grooves.

Reference:

- Using a belt tention gauge, check the drive belt tension.

Drive belt tension: 7A–FE, 3S–GE, 3S–FE, 5S–FE

New belt

441–539 N (45–55 kgf, 99–121 lbf)

Used belt

196–343 N (20–35 kgf, 44–77 lbf)

IDLE–UP CHECK

1. **WARM UP ENGINE**
2. **TURN AIR CONDITIONER SWITCH OFF**
3. **CHECK IDLE–UP**

(a) Fully turn the steering wheel.

(b) Check that the engine rpm decreases when the air control valve hose is pinched.

(c) Check that the engine rpm increases when the hose is released.

Downloaded from www.Manualslib.com manuals search engine

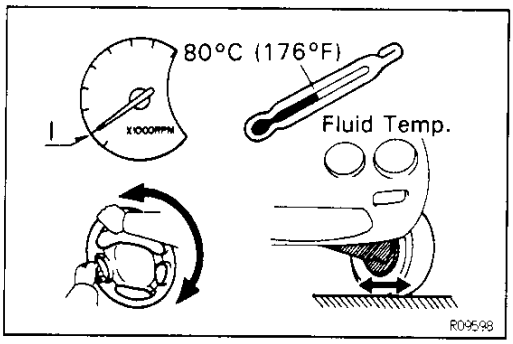

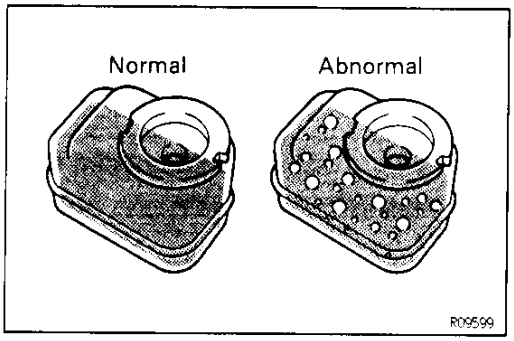

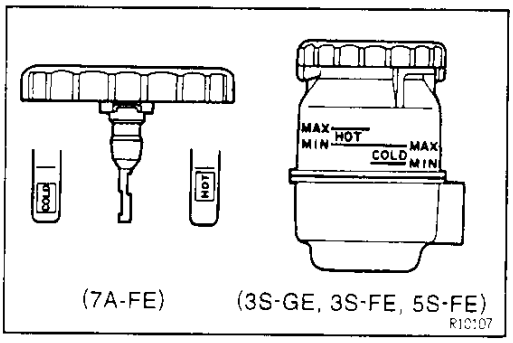

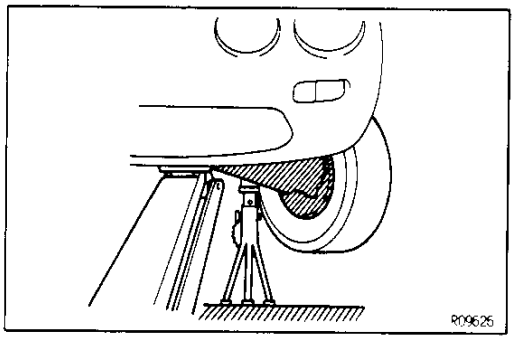

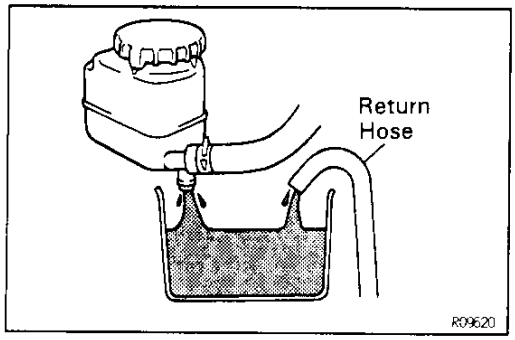

SR

FLUID LEVEL CHECK

SR0G0-05

1. **KEEP VEHICLE LEVEL**
2. **BOOST FLUID TEMPERATURE**
   With the engine idling at 1,000 rpm or less, turn the steering wheel from lock to lock several times to boost fluid temperature.
   Fluid temperature:
   80 °C (176 °F)
3. **STOP ENGINE**
4. **CHECK FOR FOAMING OR EMULSIFICATION**
   HINT: Foaming and emulsification indicate either the existence of air in the system or that the fluid level is too low.
5. **CHECK FLUID LEVEL IN OIL RESERVOIR**
   Check the fluid level and add fluid if necessary.
   Fluid:
   ATF DEXRON® II
   HINT: 7A–FE
   Check that the fluid level is within the HOT LEVEL of the dipstick of the reservoir cap. If the fluid is cold, check that it is within the COLD LEVEL of the dipstick.
   HINT: 3S–GE, 3S–FE, 5S–FE
   Check that the fluid level is within the HOT LEVEL of the reservoir. If the fluid is cold, check that it is within the COLD LEVEL of the reservoir.

POWER STEERING FLUID REPLACEMENT

SR0G1-06

1. **JACK UP FRONT OF VEHICLE AND SUPPORT IT WITH STANDS**
2. **REMOVE FLUID RETURN HOSE FROM OIL RESERVOIR AND DRAIN FLUID INTO CONTAINER**
   NOTICE: Take care not to spill fluid on the drive belt.

Downloaded from www.Manualslib.com manuals search engine

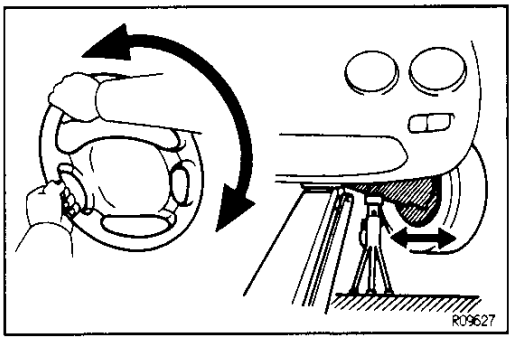

3. **TURN STEERING WHEEL FROM LOCK TO LOCK WHILE DRAINING FLUID**

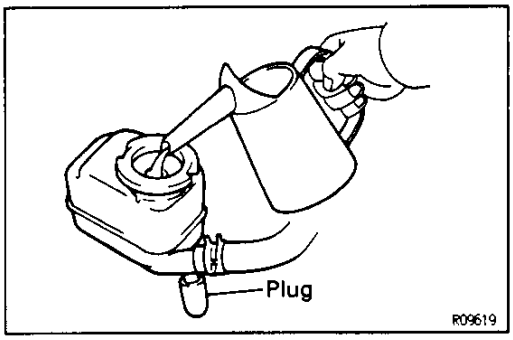

4. **FILL OIL RESERVOIR WITH FRESH FLUID**
   Fluid:
   ATF DEXRON® II

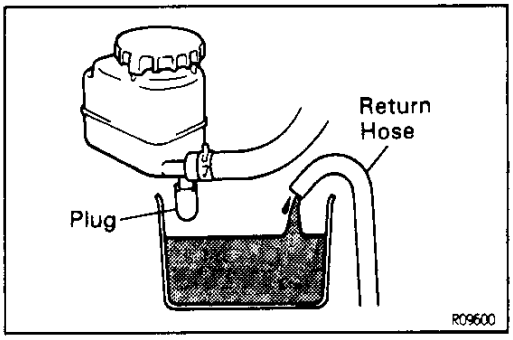

5. **START ENGINE AND RUN IT AT 1,000 RPM**
   After 1 or 2 seconds, fluid will begin to discharge from the return hose. Stop the engine immediately at this time.
   NOTICE: Take care that some fluid remains left in the oil reservoir.
6. **REPEAT STEPS 4 AND 5 FOUR OR FIVE TIMES UNTIL THERE IS NO MORE AIR IN FLUID**
7. **CONNECT RETURN HOSE TO OIL RESERVOIR**
8. **BLEED POWER STEERING SYSTEM**

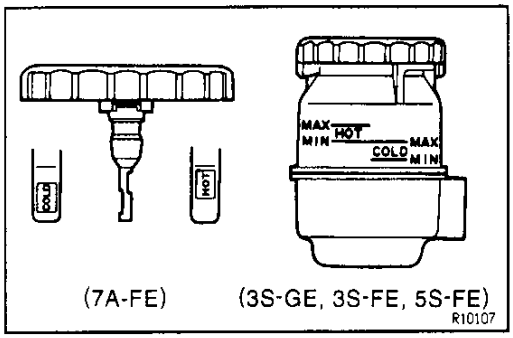

POWER STEERING SYSTEM BLEEDING

1. **CHECK FLUID LEVEL IN OIL RESERVOIR**
   Check the fluid level and add fluid if necessary.
   Fluid:
   ATF DEXRON® II
   HINT: 7A–FE
   Check that the fluid level is within the HOT LEVEL of the dipstick of the reservoir cap. If the fluid is cold, check that it is within the COLD LEVEL of the dipstick.
   HINT: 3S–GE, 3S–FE, 5S–FE
   Check that the fluid level is within the HOT LEVEL of the reservoir. If the fuild is cold, check that it is within the COLD LEVEL of the reservoir.

Downloaded from www.Manualslib.com manuals search engine

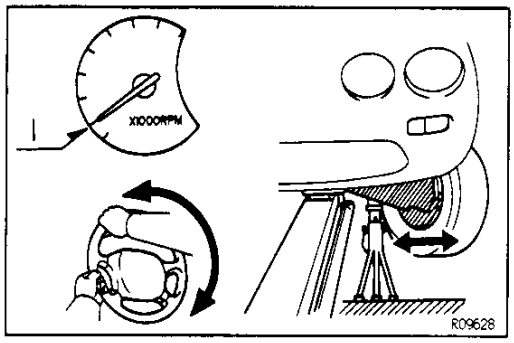

2. START ENGINE AND TURN STEERING WHEEL FROM LOCK TO LOCK 3 OR 4 TIMES

With the engine speed below 1,000 rpm, turn the steering wheel to right or left full lock and keep it there for 2 – 3 seconds, then turn the wheel to the opposite full lock and keep it there for 2 – 3 seconds.

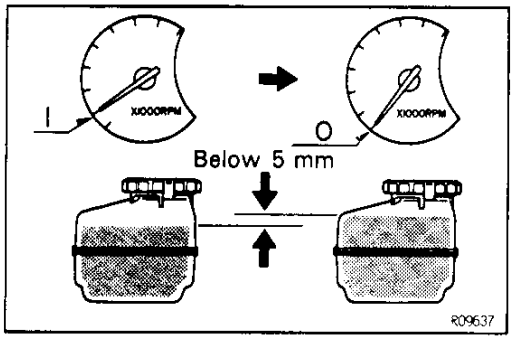

3. CHECK THAT FLUID IN OIL RESERVOIR IS NOT FOAMY OR CLOUDY AND DOES NOT RISE OVER MAXIMUM WHEN ENGINE IS STOPPED

Measure the fluid level with the engine running. Stop the engine and measure the fluid level.

Maximum rise:

5 mm (0.20 in.)

If a problem is found, repeat "POWER STEERING FLUID REPLACEMENT" on pages SR–40 and 41. Repair the PS if the problem persists.

SR08A-01

OIL PRESSURE CHECK

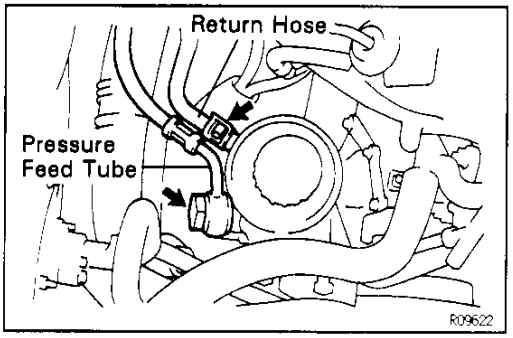

1. CONNECT OIL PRESSURE GAUGE

7A–FE:

(a) Disconnect the return hose from the oil reservoir, and drain fluid.

NOTICE: Take care not to spill fluid on the drive belt.

(b) Remove the union bolt, gasket and disconnect the pressure feed tube.

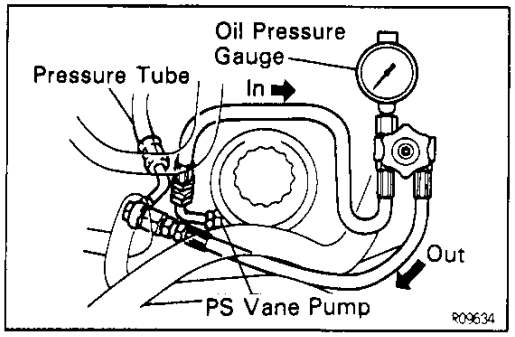

(c) Connect the gauge over a new gasket, as shown in the illustration.

(d) Connect the return hose.

(e) Bleed the power steering system.
(See page SR–41)

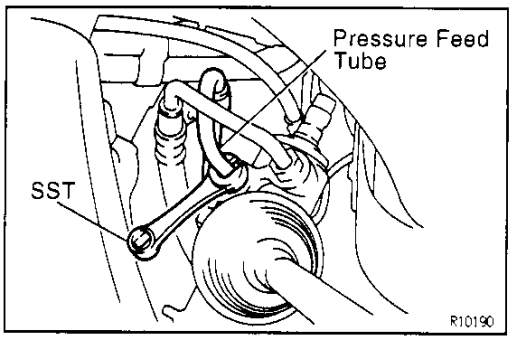

3S–GE, 3S–FE, 5S–FE:

(a) Using SST, disconnect the pressure feed tube.
SST 09631–22020

Downloaded from www.Manualslib.com manuals search engine

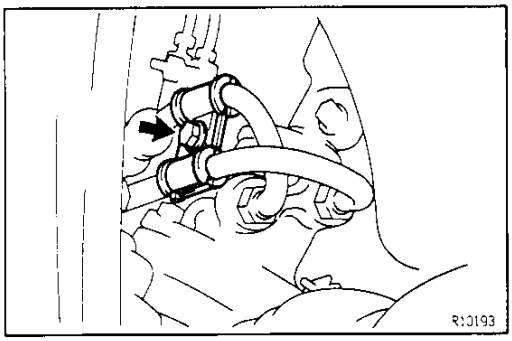

(b) Remove the tube clamp.

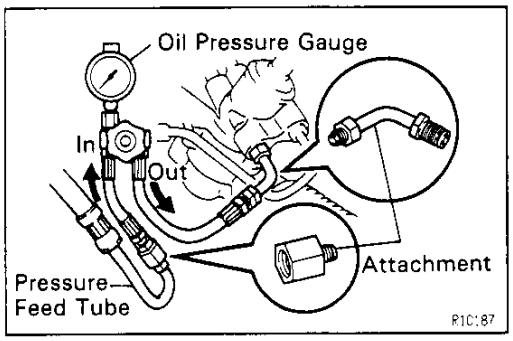

(c) Connect the gauge, as shown in the illustration.
(d) Bleed the power steering system.
(See page SR–41)

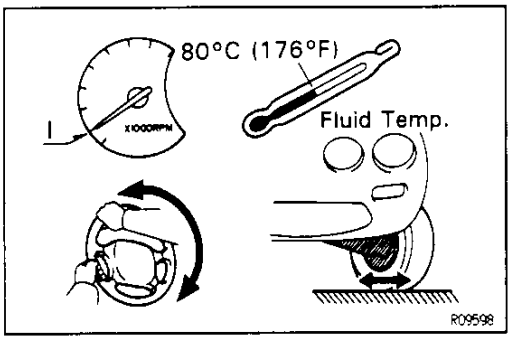

2. START ENGINE AND RUN IT AT IDLE

3. BOOST FLUID TEMPERATURE

With the engine idling at 1,000 rpm or less, turn the steering wheel from lock to lock several times to boost fluid temperature.

Fluid temperature:

80 °C (176 °F)

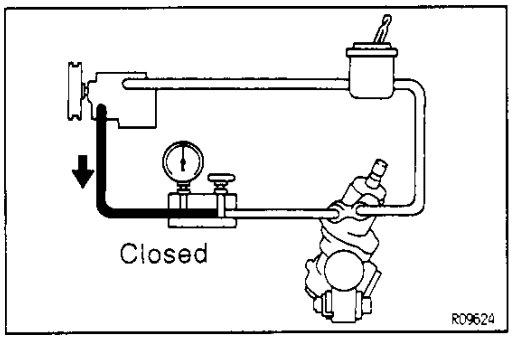

4. CHECK FLUID PRESSURE READING WITH VALVE CLOSED

Close the valve of the oil pressure gauge and observe the reading on the gauge.

Minimum pressure: 7A–FE

6,865 kPa (70 kgf/cm², 996 psi)

Minimum pressure: 3S–GE, 3S–FE, 5S–FE

8,826 kPa (90 kgf/cm², 1,280 psi)

NOTICE:

- **Do not keep the valve closed for more than 10 seconds.**
- **Do not let the fluid temperature become too high.**

If pressure is low, repair or replace the PS vane pump.

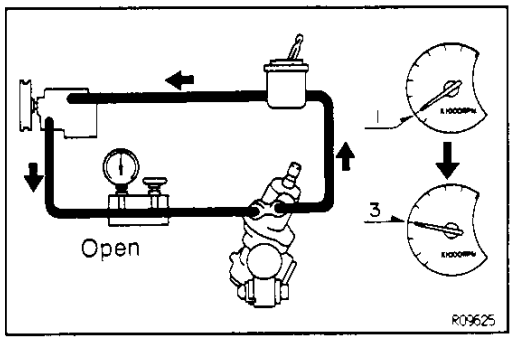

5. OPEN VALVE FULLY

6. CHECK AND RECORD PRESSURE READING AT 1,000 RPM

7. CHECK AND RECORD PRESSURE READING AT 3,000 RPM

Check that the pressure difference between the 1,000 rpm and 3,000 rpm checks is less than 490 kPa (5 kgf/cm², 71 psi). If the difference is excessive, repair or replace the flow control valve of the PS vane pump.

NOTICE: Do not operate the steering wheel.

Downloaded from www.Manualslib.com manuals search engine

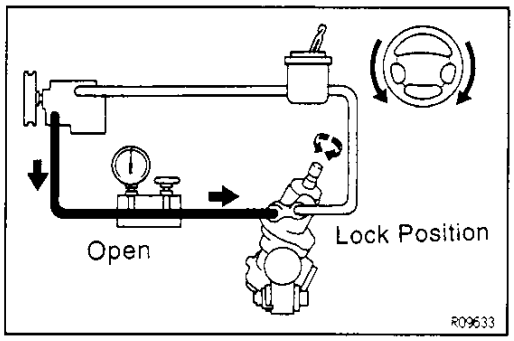

8. CHECK PRESSURE READING WITH STEERING WHEEL TURNED TO FULL LOCK

Be sure the valve of the oil pressure gauge is fully opened, and the engine idling.

Minimum pressure: 7A–FE
6,865 kPa (70 kgf/cm², 996 psi)

Minimum pressure: 3S–GE, 3S–FE, 5S–FE
8,826 kPa (90 kgf/cm², 1,280 psi)

NOTICE:

- **Do not maintain lock position for more than 10 seconds.**
- **Do not let the fluid temperature become too high.**

If pressure is low, the PS gear housing has an internal leak and must be repaired or replaced.

SR

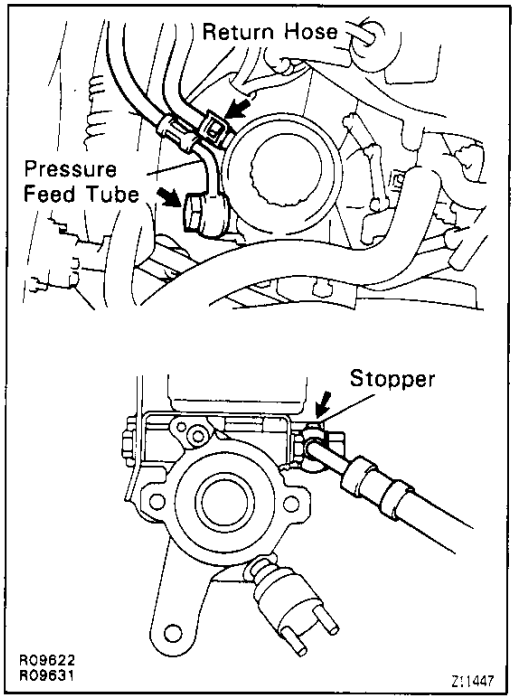

9. DISCONNECT OIL PRESSURE GAUGE

7A–FE:

(a) Remove the return hose, and drain fluid.
NOTICE: Take care not to spill fluid on the drive belt.

(b) Disconnect the gauge.

(c) Connect the pressure feed tube with the union bolt with 2 new gaskets.
HINT: Make sure the stopper is touching the pump housing, as shown, then torque the bolt.
Torque: 52 N·m (525 kgf·cm, 38 ft·lbf)

(d) Connect the return hose.

(e) Bleed the power steering system.
(See page SR–41)

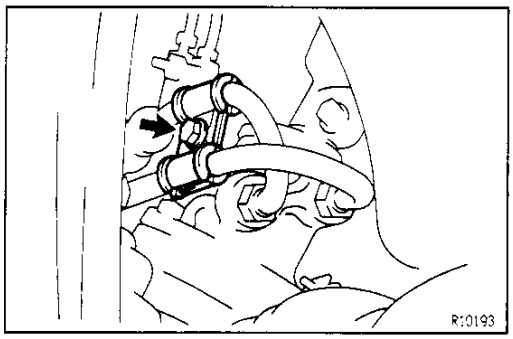

3S–GE, 3S–FE, 5S–FE:

(a) Install the tube clamp.

Downloaded from www.Manualslib.com manuals search engine

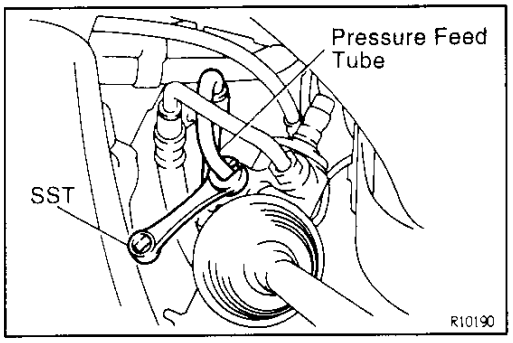

(b) Using SST, connect the tube to the control valve housing.
SST 09631–22020
Torque: 36 N·m (365 kgf·cm, 26 ft·lbf)
HINT: Use a torque wrench with a fulcrum length of 300 mm (11.81 in.).

(c) Bleed the power steering system.
(See page SR–41)

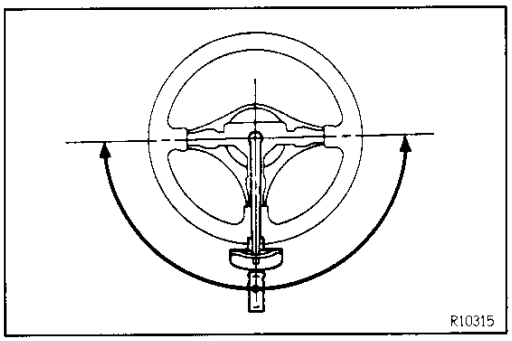

MEASURE STEERING EFFORT

SR0R4–02

1. CENTER STEERING WHEEL AND RUN ENGINE AT IDLE

2. MEASURE STEERING EFFORT

(a) Remove the steering wheel pad.
(See page SR–8)

(b) Measure the steering effort in both directions.
Maximum steering effort:
6.9 N·m (70 kgf·cm, 61 in.·lbf)
If steering effort is excessive, repair the power steering unit.
HINT: Be sure to consider the tire type, pressure and contact surface before making your diagnosis.

(c) Torque the steering wheel set nut.
Torque: 34 N·m (350 kgf·cm, 25 ft·lbf)

(d) Install the steering wheel pad.
(See page SR–9)

SR

Downloaded from www.Manualslib.com manuals search engine

POWER STEERING PUMP (7A–FE) COMPONENTS

SR068-01

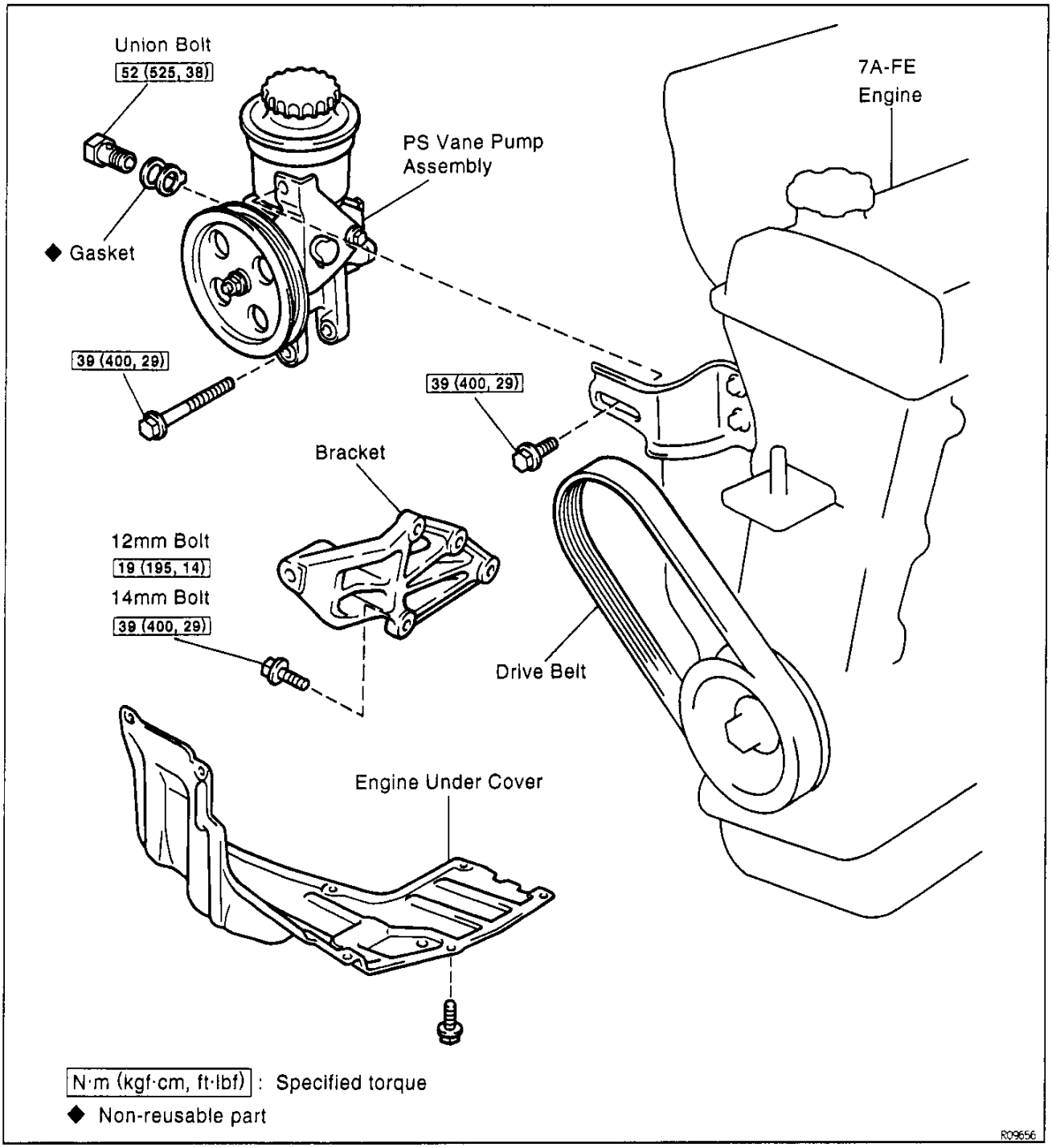

SR

Downloaded from www.Manualslib.com manuals search engine

SR08C-01

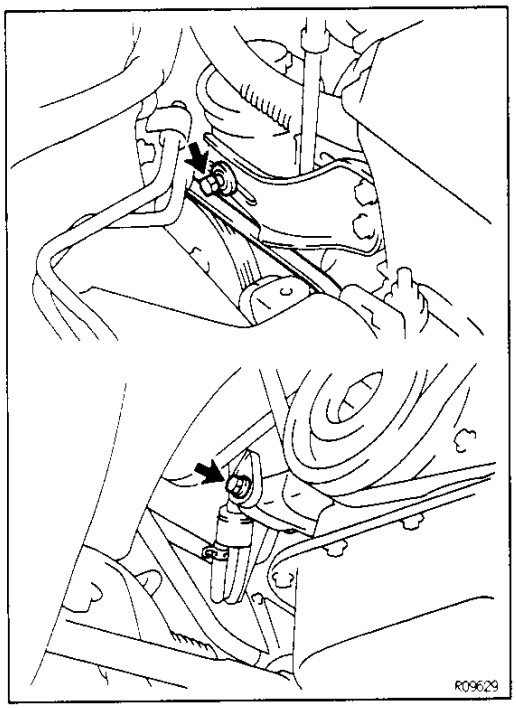

MAIN POINTS OF REMOVAL AND INSTALLATION

1. REMOVE DRIVE BELT

Loosen the 2 bolts.

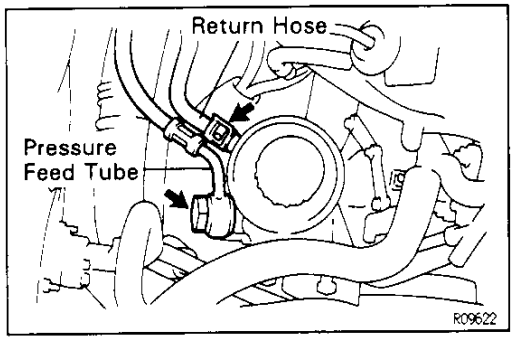

2. DISCONNECT RETURN HOSE AND PRESSURE FEED TUBE

(a) Disconnect the hose from the oil reservoir, and drain fluid.

NOTICE: Take care not to spill fluid on the drive belt.

(b) Remove the union bolt, gasket, and disconnect the tube.

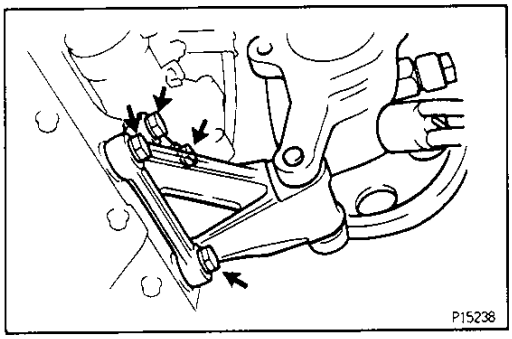

3. REMOVE PS VANE PUMP ASSEMBLY

Remove the 4 bolts.

Downloaded from www.Manualslib.com manuals search engine

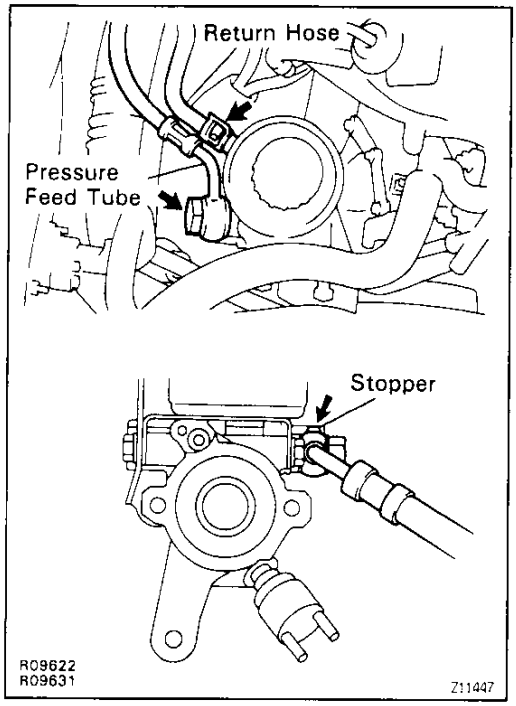

4. **CONNECT PRESSURE FEED TUBE AND RETURN HOSE**
   Torque the union bolt over 2 new gaskets.
   HINT: Make sure the stopper is touching the pump housing, as shown, then torque the bolt.
   Torque: 52 N·m (525 kgf·cm, 38 ft·lbf)
5. **ADJUST DRIVE BELT TENSION**
   (See page SR–39)
6. **BLEED POWER STEERING SYSTEM**
   (See page SR–41)

Downloaded from www.Manualslib.com manuals search engine

SROAY-02

COMPONENTS

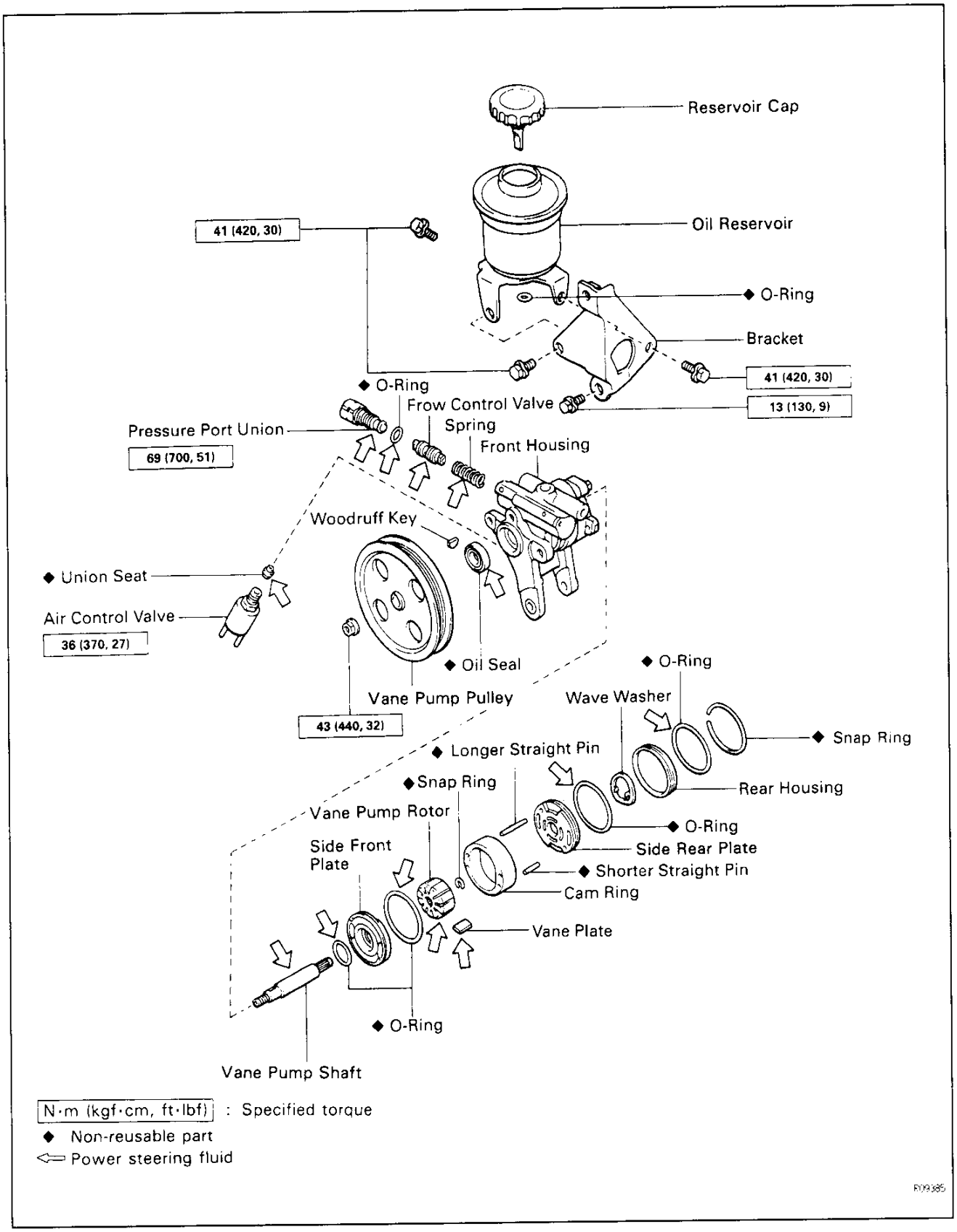

SR

Downloaded from www.Manualslib.com manuals search engine

PS VANE PUMP DISASSEMBLY

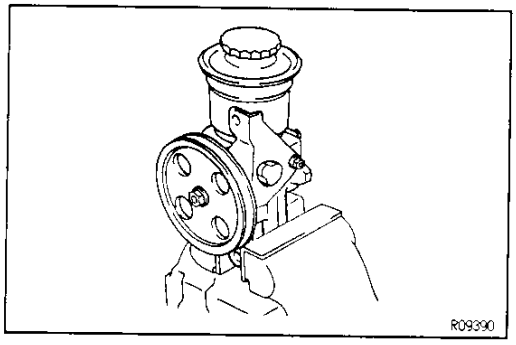

1. SECURE PS VANE PUMP ASSEMBLY IN VISE

NOTICE: Do not tighten the vise too tight.

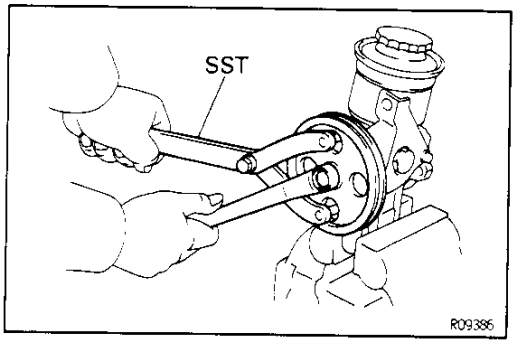

2. REMOVE VANE PUMP PULLEY

(a) Using SST to stop the pulley rotating, remove the nut.
SST 09960–10010

(b) Remove the woodruff key.

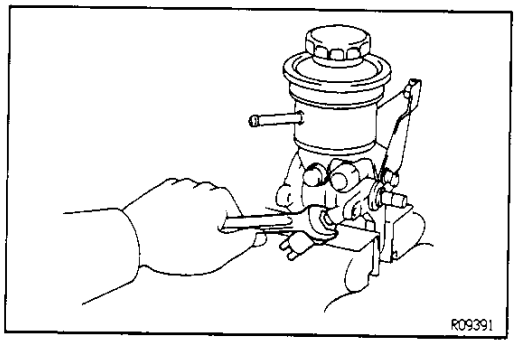

3. REMOVE AIR CONTROL VALVE

Remove the union seat.

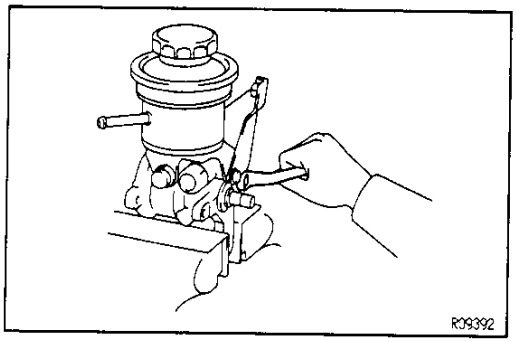

4. REMOVE BRACKET AND OIL RESERVOIR

(a) Remove the 4 bolts.

(b) Remove the O–ring from the reservoir.

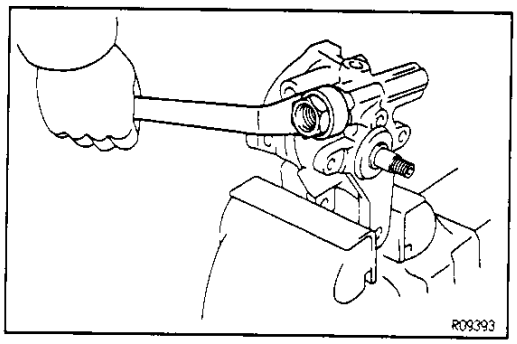

5. REMOVE PRESSURE PORT UNION

Remove the O–ring from the union.

Downloaded from www.Manualslib.com manuals search engine

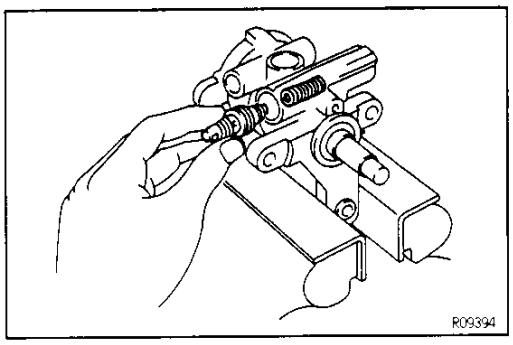

6. REMOVE FLOW CONTROL VALVE AND SPRING

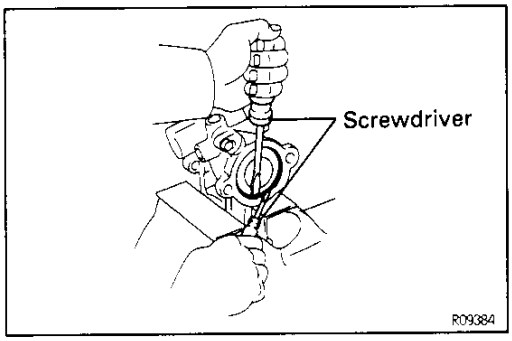

7. REMOVE REAR HOUSING AND WAVE WASHER

(a) Using 2 screwdrivers, remove the snap ring.

SR

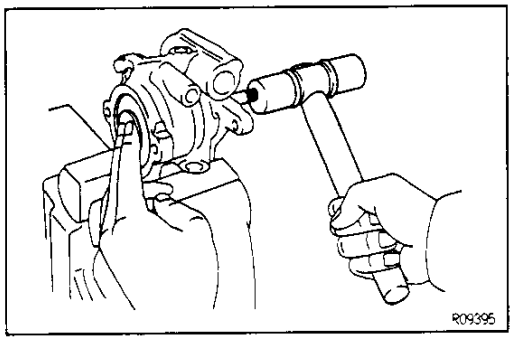

(b) Using a plastic hammer, tap out the housing and washer.

(c) Remove the O–ring from the housing.

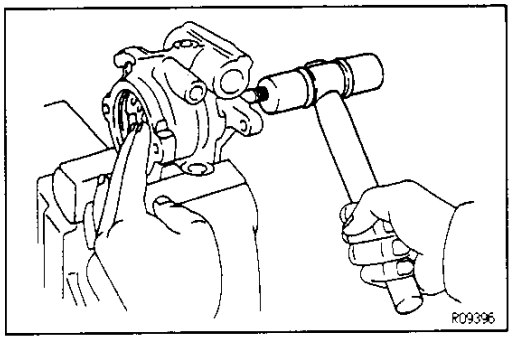

8. REMOVE SIDE REAR PLATE

(a) Using a plastic hammer, tap out the plate.

(b) Remove the O–ring from the plate.

9. REMOVE CAM RING AND 10 VANE PLATES

Remove the ring and plates from the shaft.

10. REMOVE VANE PUMP SHAFT WITH VANE PUMP ROTOR AND SIDE FRONT PLATE

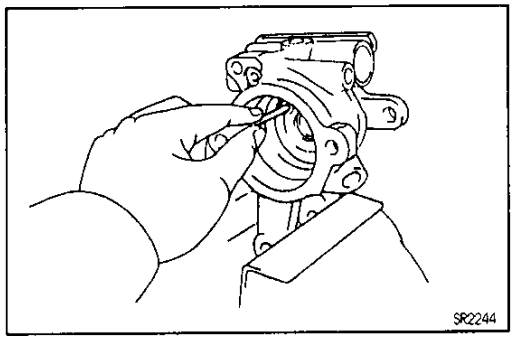

11. REMOVE LONGER STRAIGHT PIN

Downloaded from www.Manualslib.com manuals search engine

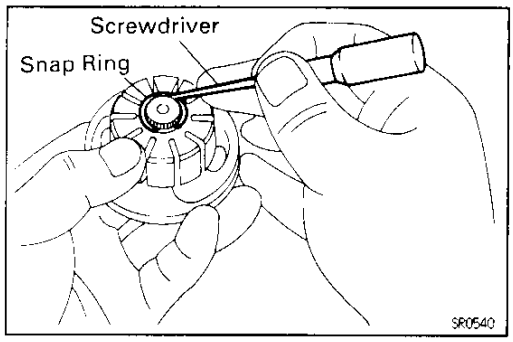

12. REMOVE VANE PUMP ROTOR AND SIDE FRONT PLATE

(a) Using a screwdriver, remove the snap ring.

(b) Remove the 2 O—rings from the plate.

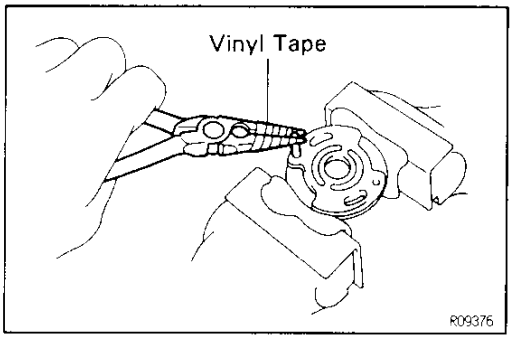

(c) Secure the plate in a vise.

NOTICE:

- **Place shop rags between the vise and the plate.**
- **Do not tighten the vise too tight.**

(d) Using pliers with vinyl tape wound around the jaw ends, remove the shorter straight pin from the plate.

SR

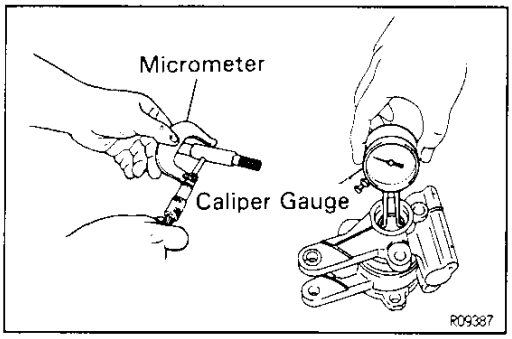

PS VANE PUMP INSPECTION AND REPLACEMENT

1. MEASURE OIL CLEARANCE OF VANE PUMP SHAFT AND FRONT HOUSING BUSHING

Using a micrometer and caliper gauge, measure the oil clearance.

Standard clearance:

0.01—0.03 mm (0.0004—0.0012 in.)

Maximum clearance:

0.07 mm (0.0028 in.)

If more than maximum, replace the entire PS vane pump.

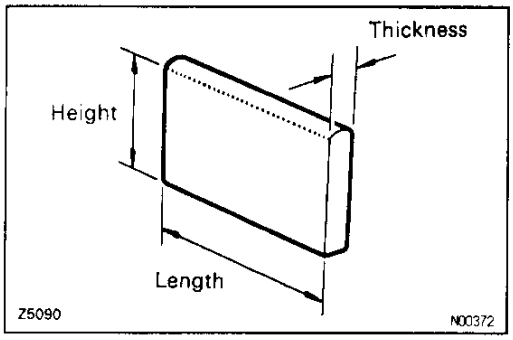

2. INSPECT VANE PUMP ROTOR AND 10 VANE PLATES

(a) Using a micrometer, measure the height, thickness and length of the plates.

Minimum height: 8.1 mm (0.319 in.)

Minimum thickness: 1.797 mm (0.0707 in.)

Minimum length: 14.988 mm (0.59008 in.)

Downloaded from www.Manualslib.com manuals search engine

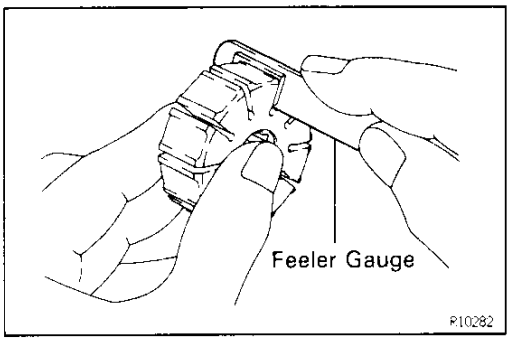

(b) Using a feeler gauge, measure the clearance between the rotor groove and vane plate.

Maximum clearance:

0.03 mm (0.0012 in.)

If more than maximum, replace the plates and/or rotor with one having the same mark stamped on the cam ring.

Inscribed mark:

1, 2, 3, 4 or None

HINT: There are 5 vane lengths with the following rotor and cam ring marks:

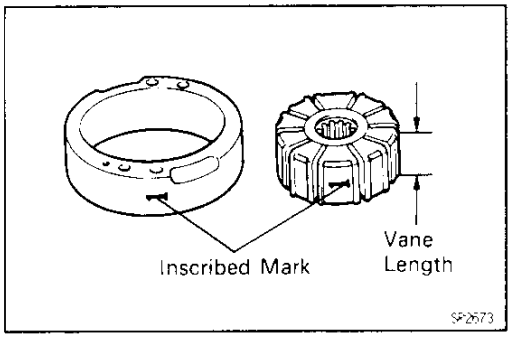

Rotor and cam ring mark	Vane length mm (in.)
None	14.996 – 14.998 (0.59039 – 0.59047)
1	14.994 – 14.996 (0.59031 – 0.59039)
2	14.992 – 14.994 (0.59024 – 0.59031)
3	14.990 – 14.992 (0.59016 – 0.59024)
4	14.988 – 14.990 (0.59008 – 0.59016)

SR

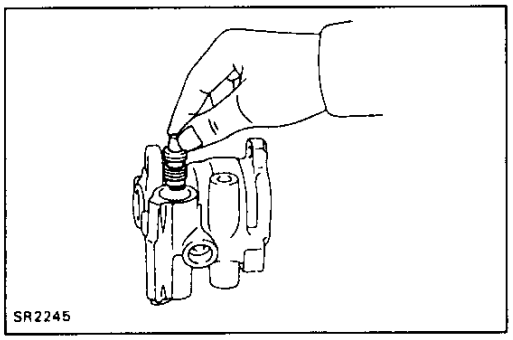

3. INSPECT FLOW CONTROL VALVE

(a) Coat the valve with power steering fluid and check that it falls smoothly into the valve hole of the front housing by its own weight.

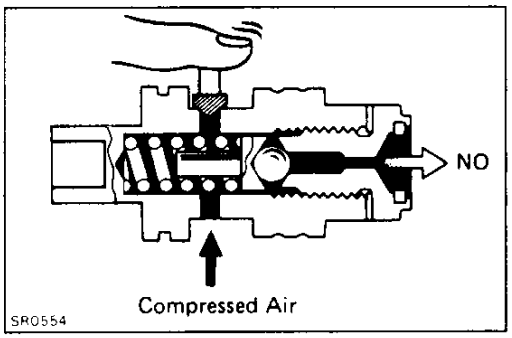

(b) Check the valve for leakage. Close one of the holes and apply compressed air [392 – 490 kPa (4 – 5 kgf/cm², 57 – 71 psi)] into the opposite side, and confirm that air does not come out from the end hole.

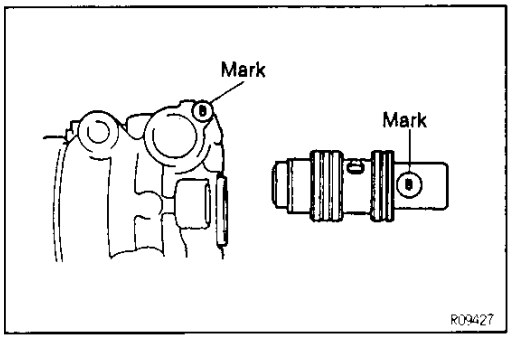

If necessary, replace the valve with one having the same letter as inscribed on the front housing.

Inscribed mark:

A, B, C, D, E or F

Downloaded from www.Manualslib.com manuals search engine

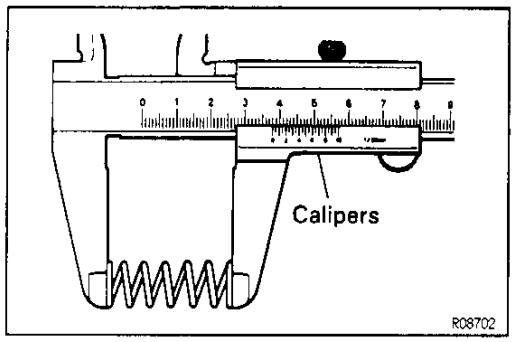

4. INSPECT SPRING

Using a calipers, measure the free length of the spring.

Spring free length:

36 mm (1.42 in.)

If not to specification, replace the spring.

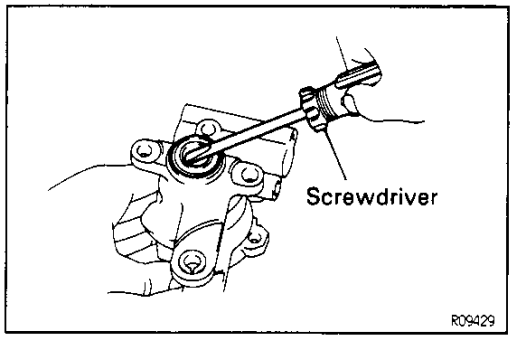

5. IF NECESSARY, REPLACE OIL SEAL

(a) Using a screwdriver, pry out the oil seal.
NOTICE: Be careful not to damage the front housing.

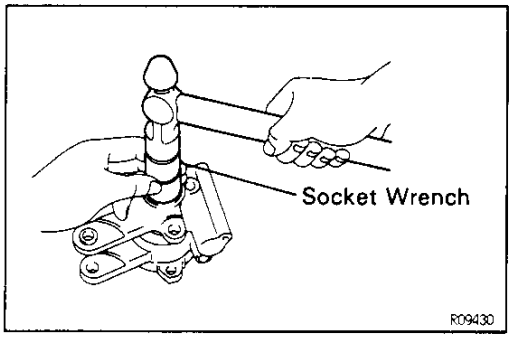

(b) Coat a new oil seal lip with power steering fluid.
(c) Using a socket wrench (23 mm) and hammer, drive in the oil seal.
NOTICE: Make sure you install the oil seal facing the correct direction.

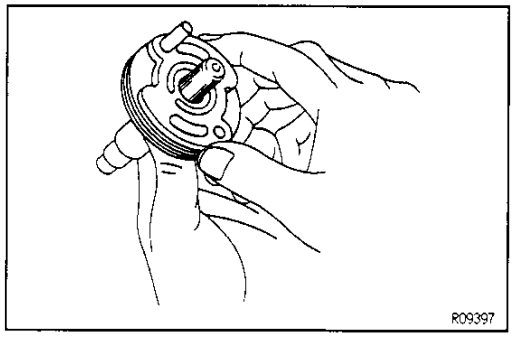

PS VANE PUMP ASSEMBLY

SR0R7-02

1. COAT WITH POWER STEERING FLUID
(See page SR–49)

2. INSTALL SIDE FRONT PLATE

(a) Install a new shorter straight pin to the plate.
(b) Coat 2 new O–rings with power steering fluid.
(c) Install the 2 O–rings to the plate.
(d) Install the plate to the vane pump shaft.

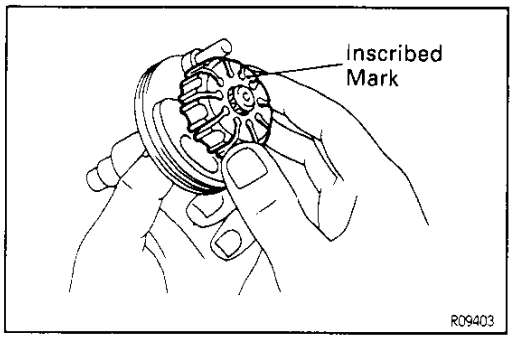

3. INSTALL VANE PUMP ROTOR

(a) Install the rotor to the vane pump shaft with the inscribed mark facing outward.
(b) Install a new snap ring.

Downloaded from www.Manualslib.com manuals search engine

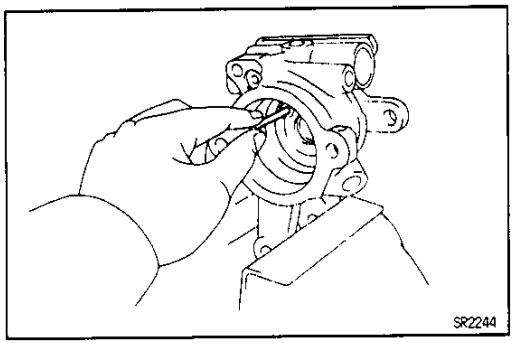

4. INSTALL NEW LONGER STRAIGHT PIN

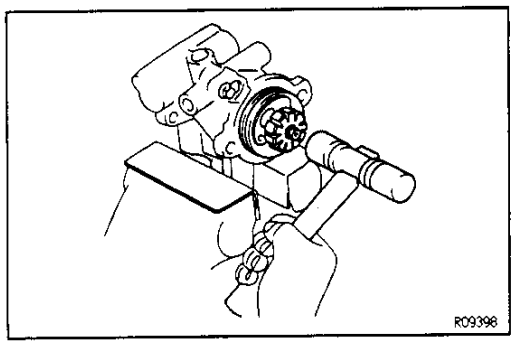

5. INSTALL VANE PUMP SHAFT WITH VANE PUMP ROTOR AND SIDE FRONT PLATE

Align the hole of the plate and longer straight pin, and tap in the shaft with a plastic hammer.

NOTICE: Be careful not to damage the oil seal and O–rings.

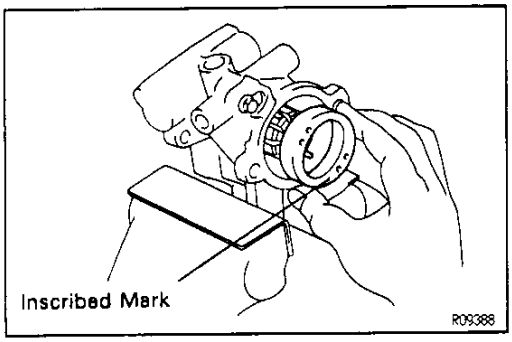

6. INSTALL CAM RING

Align the holes of the cam ring and 2 straight pins, and install the ring with the inscribed mark facing outward.

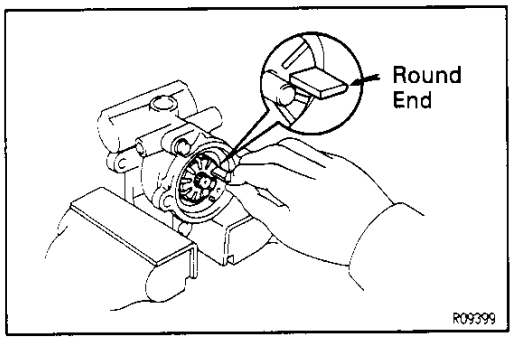

7. INSTALL 10 VANE PLATES

Install the plate with the round end facing outward.

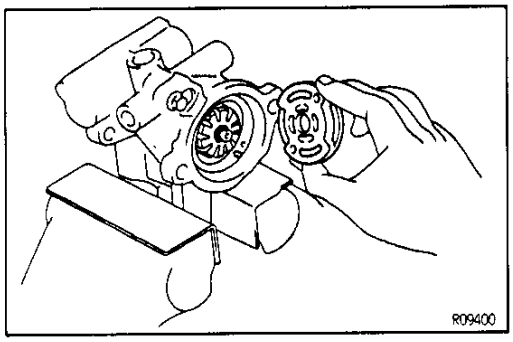

8. INSTALL SIDE REAR PLATE

(a) Coat a new O–ring with power steering fluid.
(b) Install the O–ring to the plate.
(c) Align the holes of the plate and 2 straight pins, and install the plate.

Downloaded from www.Manualslib.com manuals search engine

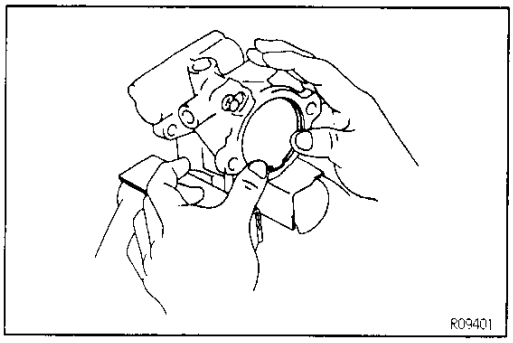

9. INSTALL WAVE WASHER AND REAR HOUSING

(a) Install the washer so that its protrusions fit into the slots in the side rear plate.
(b) Coat a new O—ring with power steering fluid.
(c) Install the O—ring to the housing.
(d) Using a plastic hammer, tap in the housing.
(e) Install a new snap ring.

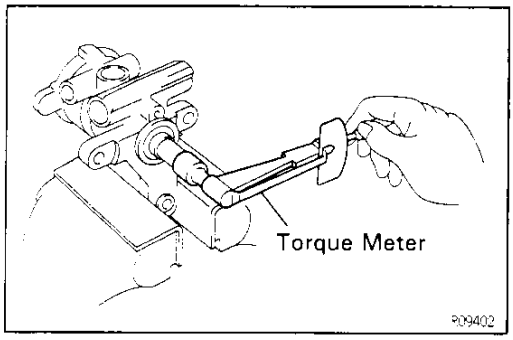

10. MEASURE VANE PUMP SHAFT ROTATING TORQUE

(a) Using a torque meter, check that the shaft rotates smoothly without abnormal noise.
(b) Temporarily install the vane pump pulley set nut, and check the rotating torque with a torque meter.
Rotating torque:
0.3 N·m (2.8 kgf·cm, 2.4 in.·lbf) or less

SR

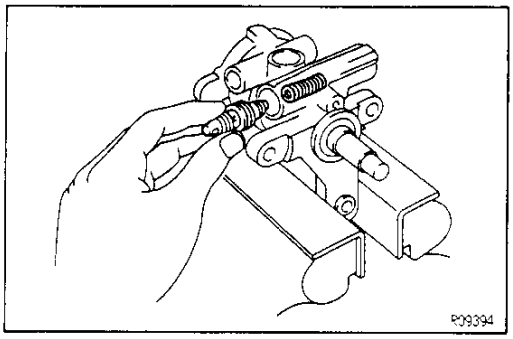

11. INSTALL SPRING AND FLOW CONTROL VALVE

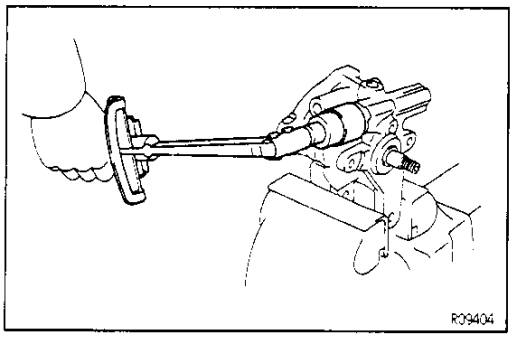

12. INSTALL PRESSURE PORT UNION

(a) Coat a new O—ring with power steering fluid.
(b) Install the O—ring to the union.
(c) Torque the union.
Torque: 69 N·m (700 kgf·cm, 51 ft·lbf)

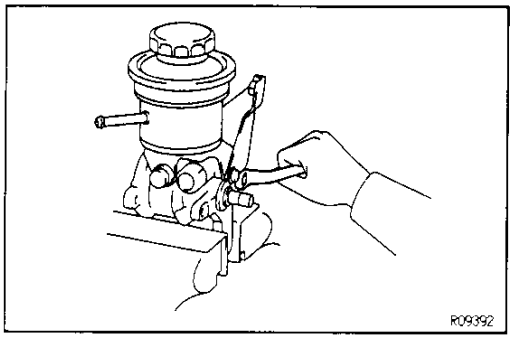

13. INSTALL OIL RESERVOIR AND BRACKET

(a) Coat a new O—ring with power steering fluid.
(b) Install the O—ring to the reservoir.
(c) Torque the 4 bolts.
Torque:
12 mm head bolt
13 N·m (130 kgf·cm, 9 ft·lbf)
14 mm head bolt
41 N·m (420 kgf·cm, 30 ft·lbf)

Downloaded from www.Manualslib.com manuals search engine

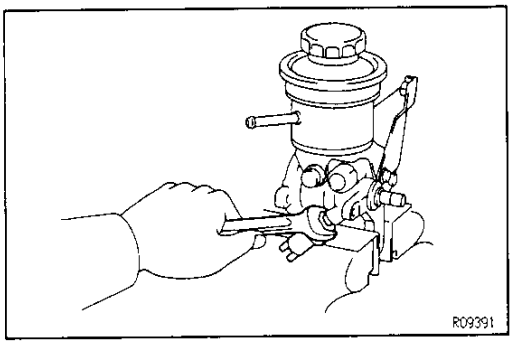

14. INSTALL AIR CONTROL VALVE

(a) Install a new union seat.

(b) Torque the valve.

Torque: 36 N·m (370 kgf·cm, 27 ft·lbf)

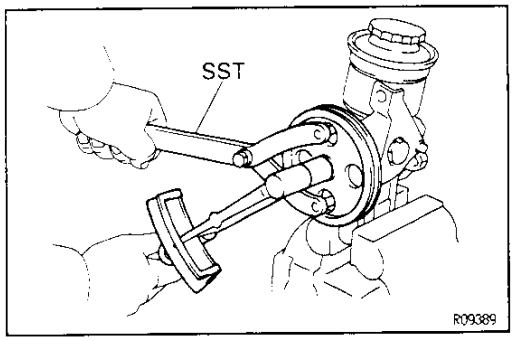

15. INSTALL VANE PUMP PULLEY

(a) Install the woodruff key to the vane pump shaft.

(b) Using SST to stop the pulley rotating, torque the nut.
SST 09960–10010

Torque: 43 N·m (440 kgf·cm, 32 ft·lbf)

Downloaded from www.Manualslib.com manuals search engine

POWER STEERING PUMP (3S–GE, 3S–FE, 5S–FE) COMPONENTS

SR08D-01

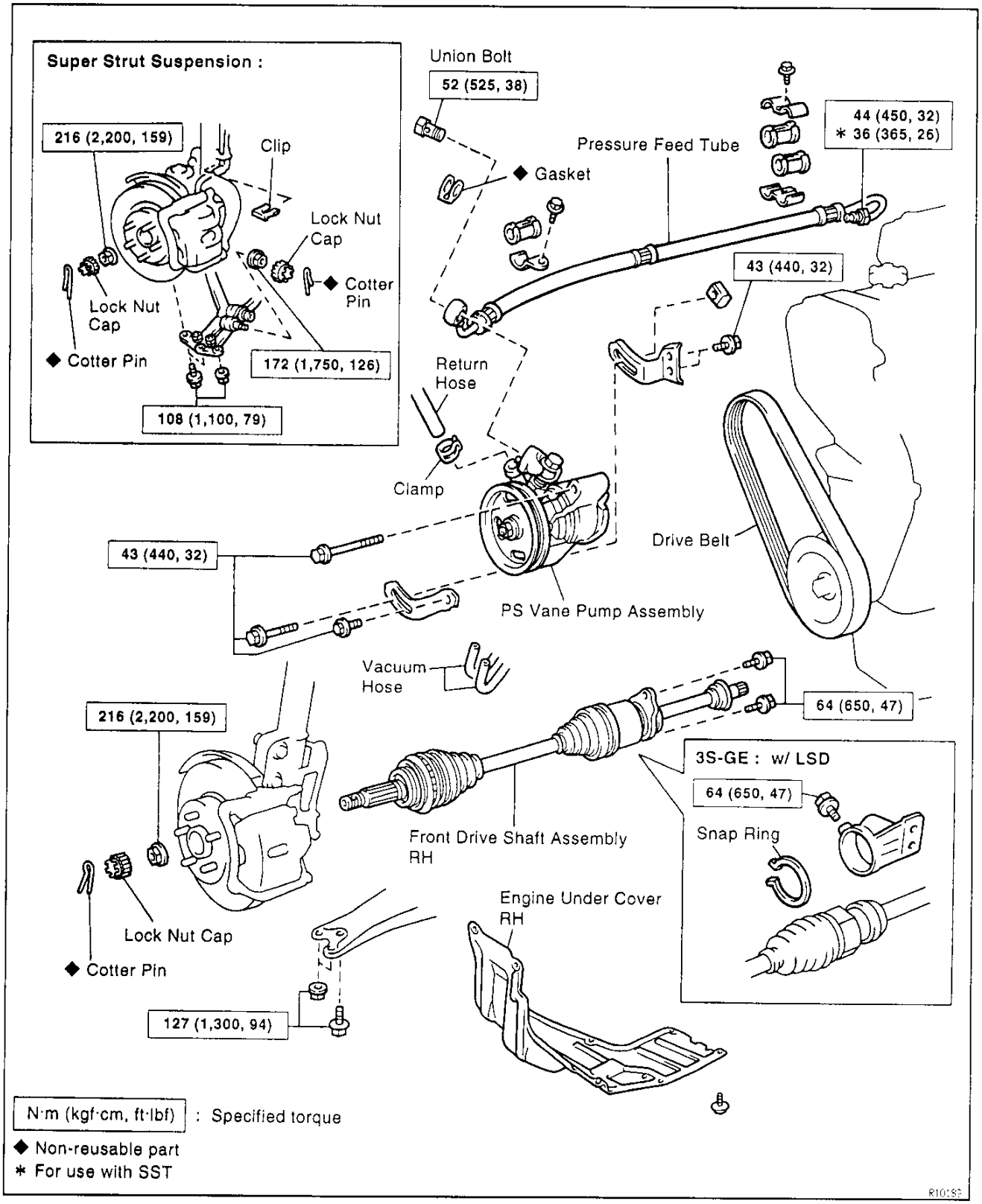

Downloaded from www.Manualslib.com manuals search engine

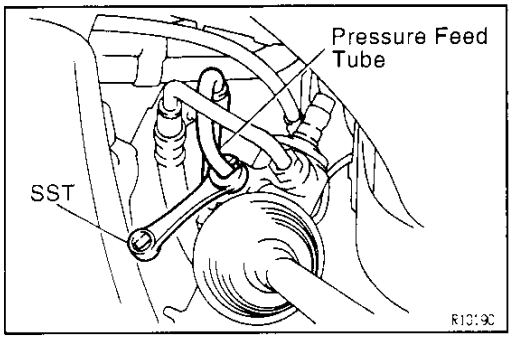

MAIN POINTS OF REMOVAL AND INSTALLATION

1. **DISCONNECT PRESSURE FEED TUBE**
   Using SST, disconnect the tube from the control valve housing.
   SST 09631 – 22020

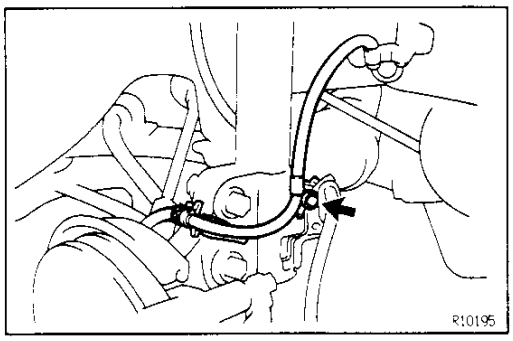

2. **REMOVE ABS SPEED SENSOR WIRING HARNESS CLAMP**
   w/ ABS:
   Remove the bolt.
3. **REMOVE DRIVE SHAFT**
   (See SA section)

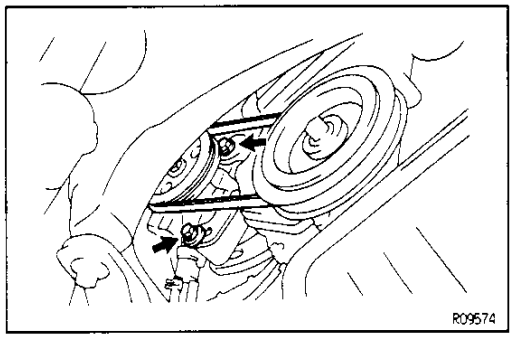

4. **REMOVE DRIVE BELT**
   Loosen the 2 bolts.

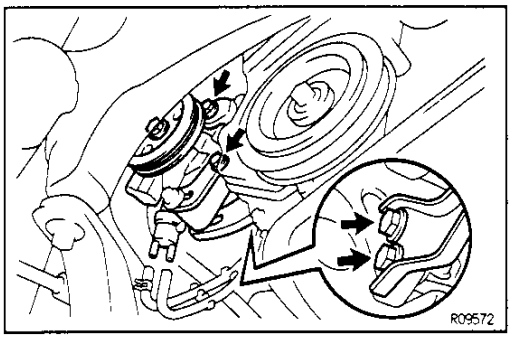

5. **REMOVE PS VANE PUMP ASSEMBLY**
   Remove the 4 bolts.

Downloaded from www.Manualslib.com manuals search engine

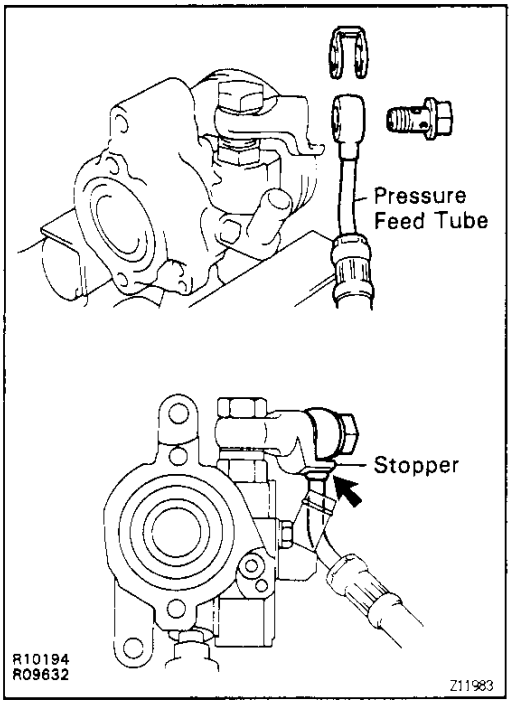

6. REMOVE AND INSTALL PRESSURE FEED TUBE

(a) Secure the PS vane pump assembly in a vise.
NOTICE: Do not tighten the vise too tight.

(b) Remove the union bolt, gasket and tube.

(c) Torque the union bolt over a new gasket.
HINT: Make sure the stopper is touching the pump housing, as shown, then torque the union bolt.
Torque: 52 N·m (525 kgf·cm, 38 ft·lbf)

SR

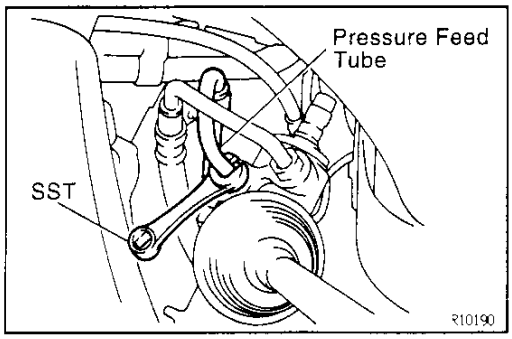

7. CONNECT PRESSURE FEED TUBE
Using SST, connect the tube to the control valve housing.
SST 09631–22020
Torque: 36 N·m (365 kgf·cm, 26 ft·lbf)
HINT: Use a torque wrench with a fulcrum length of 300 mm (11.81 in.)

8. ADJUST DRIVE BELT TENSION
(See page SR–39)

9. BLEED POWER STEERING SYSTEM
(See page SR–41)

10. CHECK ABS SPEED SENSOR SIGNAL
w/ ABS:
(See BR section)

Downloaded from www.Manualslib.com manuals search engine

BROOK-0E

COMPONENTS

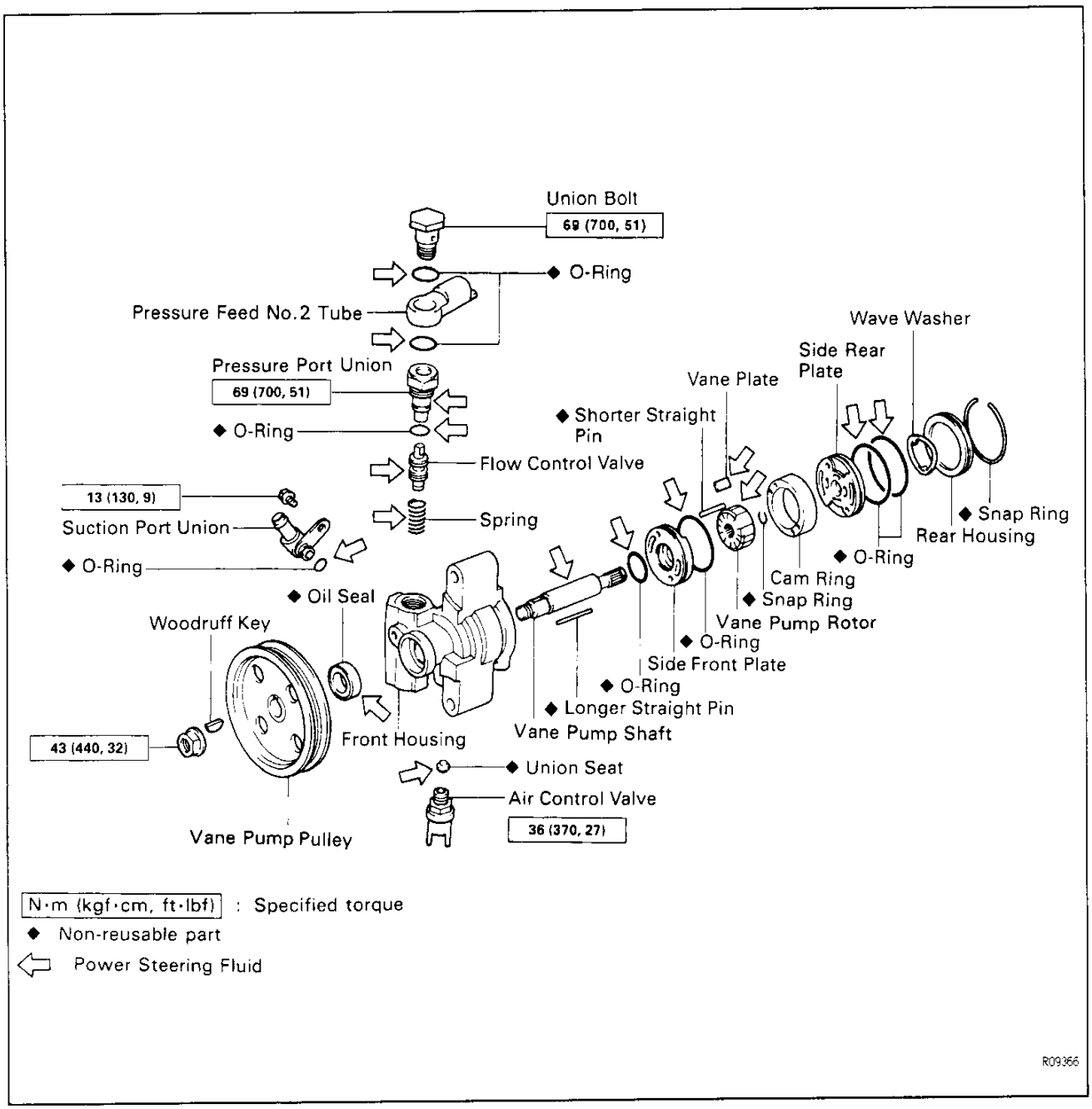

SR

BROBE-01

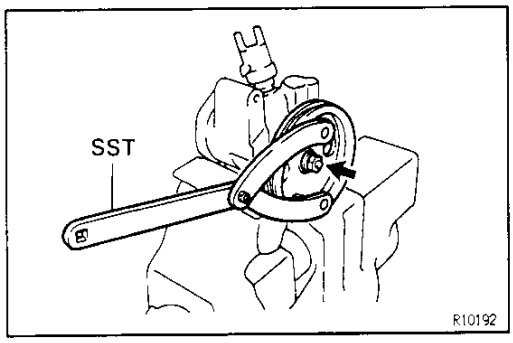

PS VANE PUMP DISASSEMBLY

1. **SECURE PS VANE PUMP ASSEMBLY IN VISE**
   NOTICE: Do not tighten the vise too tight.
2. **REMOVE VANE PUMP PULLEY**

(a) Using SST to stop the pulley rotating, remove the nut.
SST 09960–10010

(b) Remove the woodruff key.

Downloaded from www.Manualslib.com manuals search engine

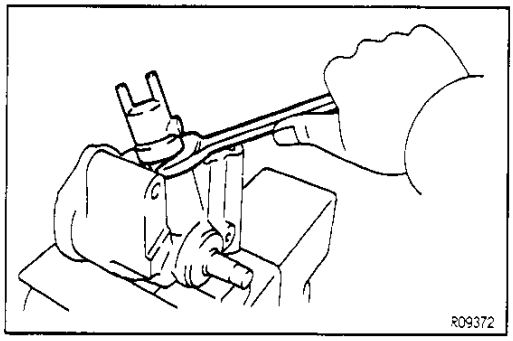

3. REMOVE AIR CONTROL VALVE
Remove the union seat.

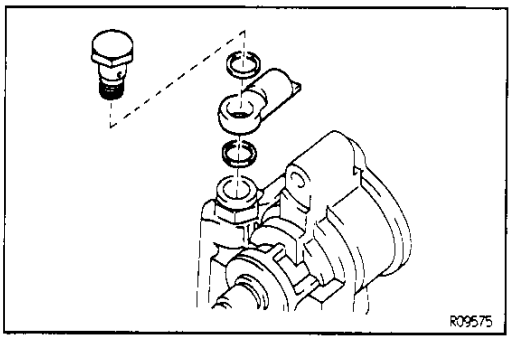

4. REMOVE PRESSURE FEED NO.2 TUBE
Remove the union bolt and 2 gaskets.

SR

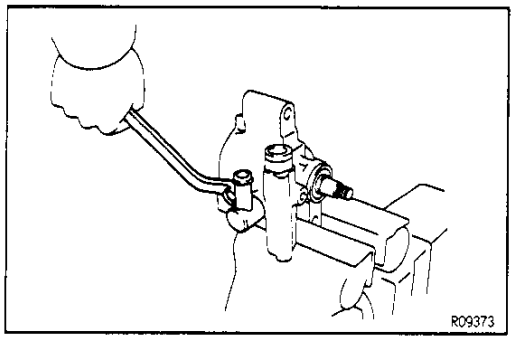

5. REMOVE SUCTION PORT UNION
(a) Remove the bolt.
(b) Remove the O–ring from the union.

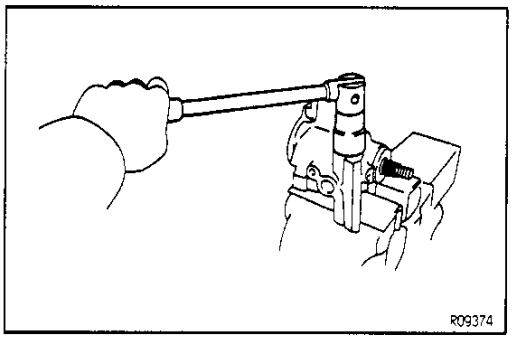

6. REMOVE PRESSURE PORT UNION
Remove the O–ring from the union.

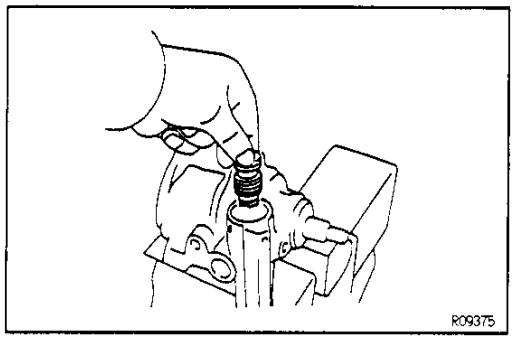

7. REMOVE FLOW CONTROL VALVE AND SPRING

Downloaded from www.Manualslib.com manuals search engine

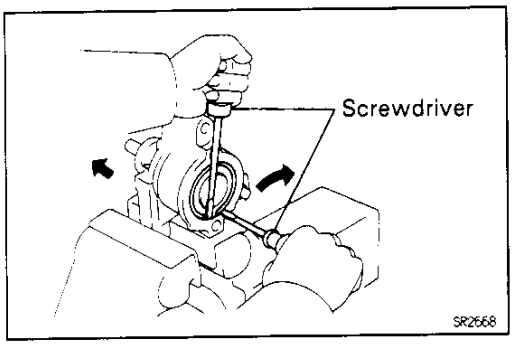

8. REMOVE REAR HOUSING AND WAVE WASHER

(a) Using 2 screwdrivers, remove the snap ring.

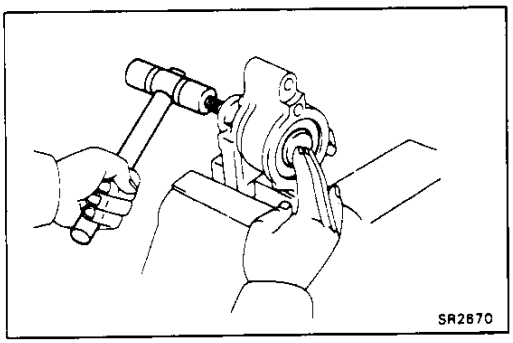

(b) Using a plastic hammer, tap out the housing and washer.

(c) Remove the O–ring from the housing.

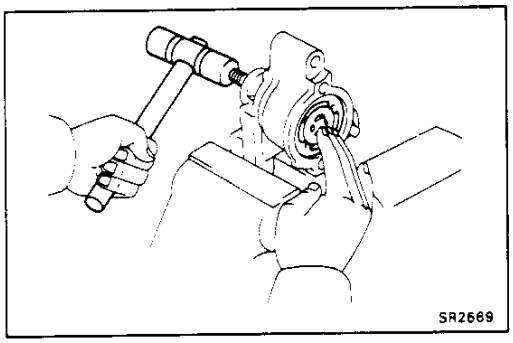

9. REMOVE SIDE REAR PLATE

(a) Using a plastic hammer, tap out the plate.

(b) Remove the O–ring from the plate.

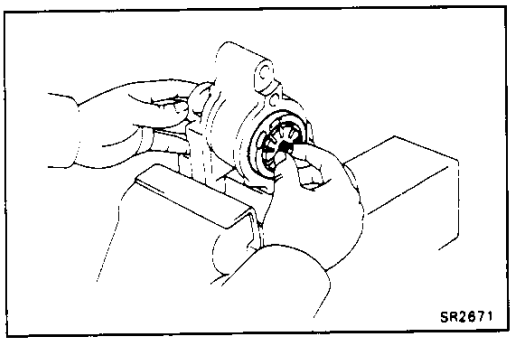

10. REMOVE CAM RING AND 10 VANE PLATES

Remove the ring and plates from the shaft.

11. REMOVE VANE PUMP SHAFT WITH VANE PUMP ROTOR AND SIDE FRONT PLATE

Remove the longer straight pin from the front housing.

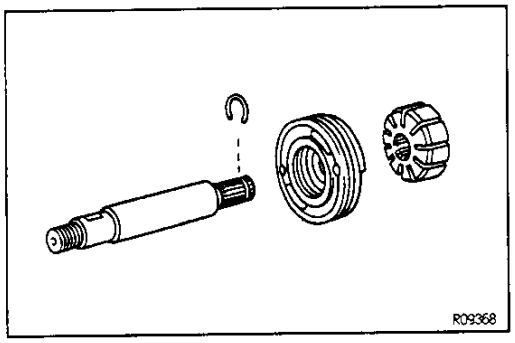

12. REMOVE VANE PUMP ROTOR AND SIDE FRONT PLATE

(a) Using a screwdriver, remove the snap ring.

(b) Remove the 2 O–rings from the plate.

Downloaded from www.Manualslib.com manuals search engine

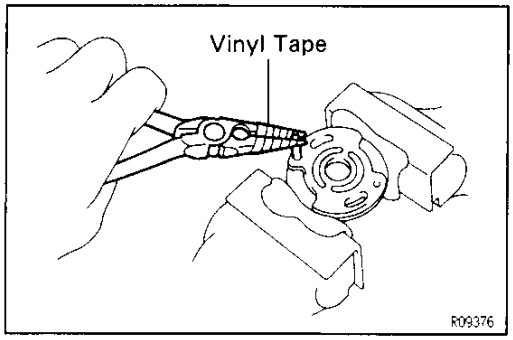

(c) Secure the plate in a vise.
NOTICE:
- **Place shop rags between the vise and the plate.**
- **Do not tighten the vise too tight.**

(d) Using pliers with vinyl tape wound around the jaw ends, remove the shorter straight pin from the plate.

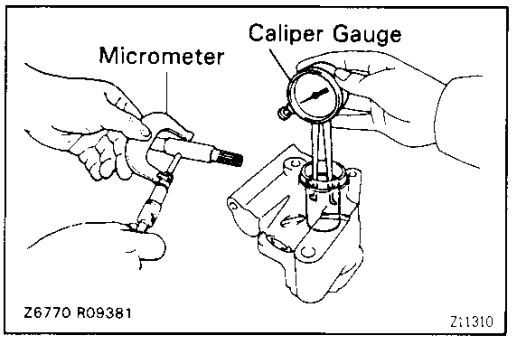

SR

PS VANE PUMP INSPECTION AND REPLACEMENT

SR018-0C

1. MEASURE OIL CLEARANCE OF VANE PUMP SHAFT AND FRONT HOUSING BUSHING

Using a micrometer and caliper gauge, measure the oil clearance.

Standard clearance:

0.01 – 0.03mm (0.0004 – 0.0012in.)

Maximum clearance:

0.07mm (0.0028in.)

If more than maximum, replace the entire PS vane pump.

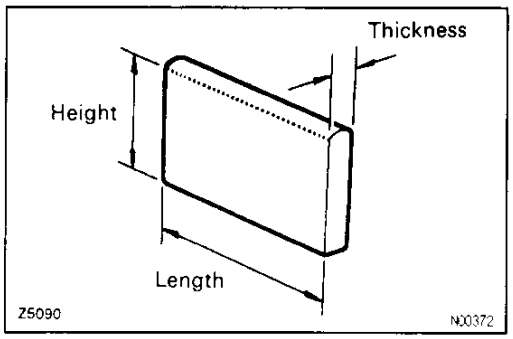

2. INSPECT VANE PUMP ROTOR AND 10 VANE PLATES

(a) Using a micrometer, measure the height, thickness and length of the plate.

Minimum height:

8.1mm (0.319in.)

Minimum thickness:

1.797mm (0.0707in.)

Minimum length:

14.988mm (0.59008in.)

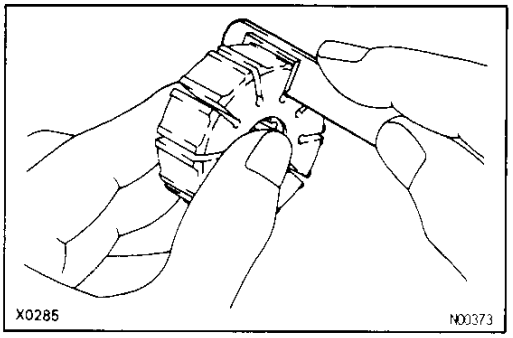

(b) Using a feeler gauge, measure the clearance between the rotor groove and plate.

Maximum clearance:

0.03mm (0.0012in.)

If more than maximum, replace the plates and/or rotor with one having the same mark stamped on the cam ring.

Inscribed mark:

1, 2, 3, 4 or None

Downloaded from www.Manualslib.com manuals search engine

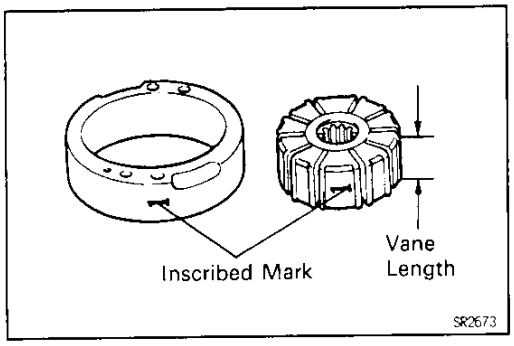

HINT: There are 5 vane lengths with the following rotor and cam ring marks:

Rotor and cam ring mark	Vane length mm (in.)
None	14.996 – 14.998 (0.59039 – 0.59047)
1	14.994 – 14.996 (0.59031 – 0.59039)
2	14.992 – 14.994 (0.59024 – 0.59031)
3	14.990 – 14.992 (0.59016 – 0.59024)
4	14.988 – 14.990 (0.59008 – 0.59016)

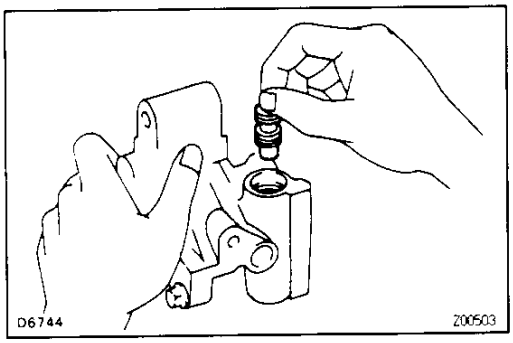

3. INSPECT FLOW CONTROL VALVE

(a) Coat the valve with power steering fluid and check that it falls smoothly into the valve hole of the front housing by its own weight.

SR

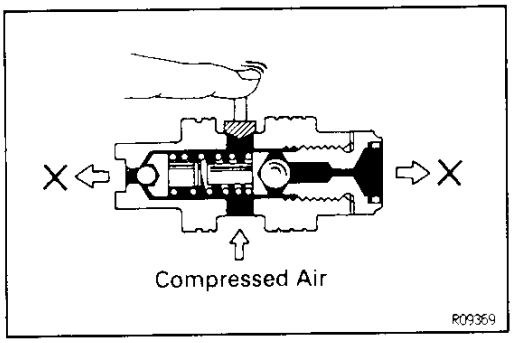

(b) Check the valve for leakage. Close one of the holes and apply compressed air [392 – 490kPa (4 – 5kgf/cm², 57 – 71psi)] into the opposite side, and confirm that air does not come out from the end hole.

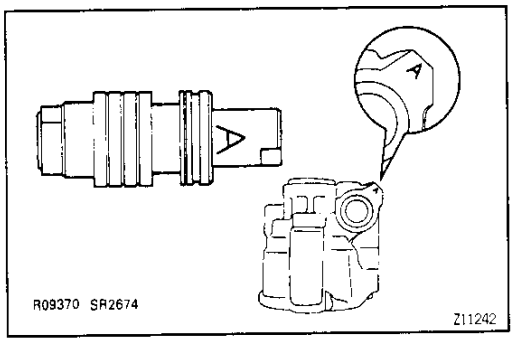

If necessary, replace the valve with one having the same letter as inscribed on the front housing.

Inscribed mark:

A, B, C, D, E or F

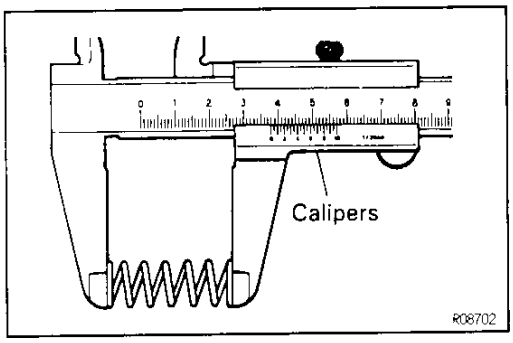

4. INSPECT SPRING

Using a calipers, measure the free length of the spring.

Spring free length:

36mm (1.42in.)

If not to specification, replace the spring.

Downloaded from www.Manualslib.com manuals search engine

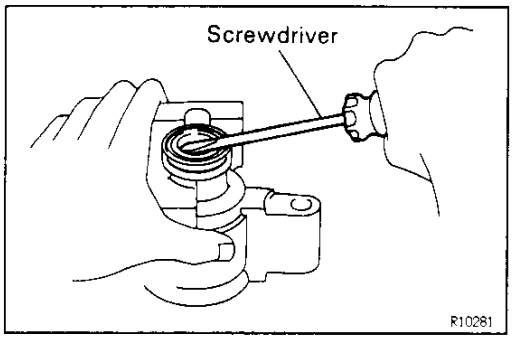

5. IF NECESSARY, REPLACE OIL SEAL

(a) Using a screwdriver, pry out the oil seal.
NOTICE: Be careful not to damage the front housing.

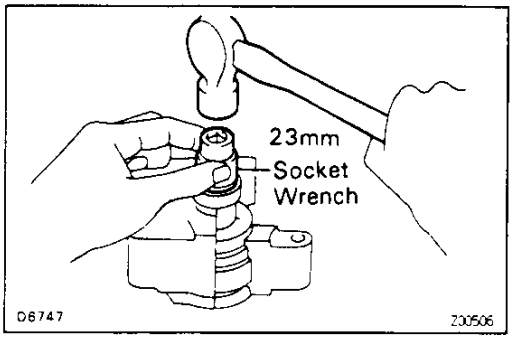

(b) Coat a new oil seal lip with power steering fluid.
(c) Using a socket wrench (23 mm) and hammer, drive in the oil seal.
NOTICE: Make sure you install the oil seal facing the correct direction.

SR

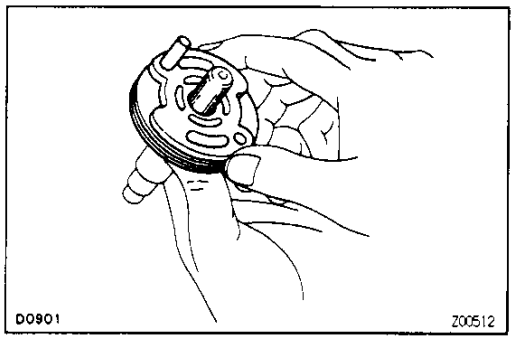

PS VANE PUMP ASSEMBLY

SR08F-01

1. COAT WITH POWER STEERING FLUID
(See page SR–61)

2. INSTALL SIDE FRONT PLATE

(a) Install a new shorter straight pin to the plate.
(b) Coat 2 new O–rings with power steering fluid.
(c) Install the 2 O–rings to the plate.
(d) Install the plate to the vane pump shaft.

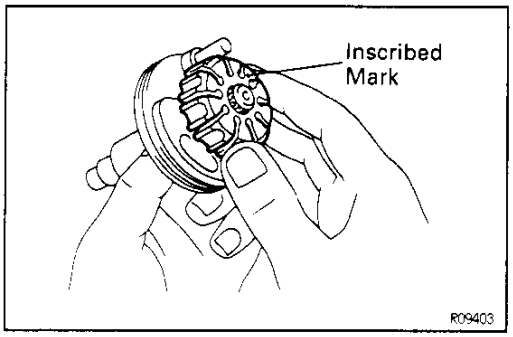

3. INSTALL VANE PUMP ROTOR

(a) Install the rotor to the vane pump shaft with the inscribed mark facing outward.
(b) Install a new snap ring.

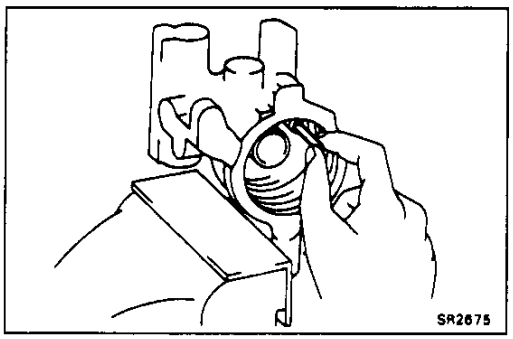

4. INSTALL NEW LONGER STRAIGHT PIN

Downloaded from www.Manualslib.com manuals search engine

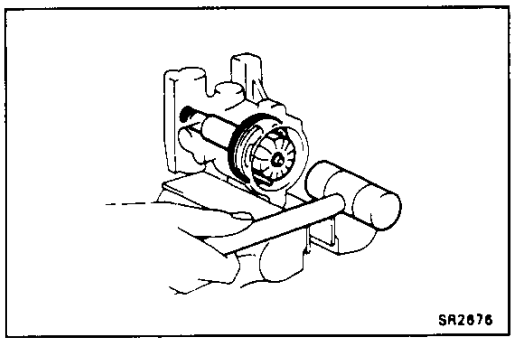

5. INSTALL VANE PUMP SHAFT WITH VANE PUMP ROTOR AND SIDE FRONT PLATE

Align the hole of the plate and longer straight pin, and tap in the shaft with a plastic hammer.

NOTICE: Be careful not to damage the oil seal and O–rings.

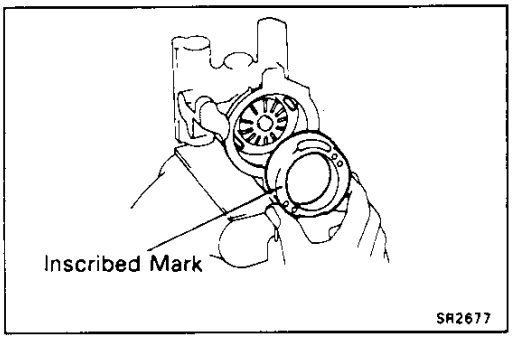

6. INSTALL CAM RING

Align the holes of the cam ring and 2 straight pins, and install the ring with the inscribed mark facing outward.

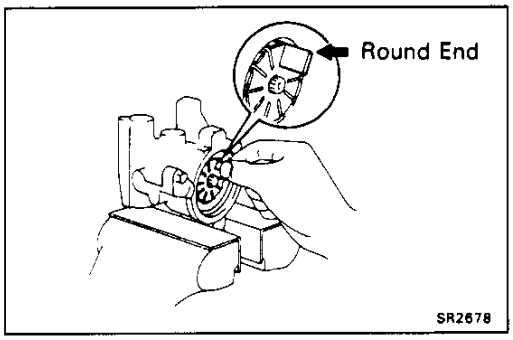

7. INSTALL 10 VANE PLATES

Install the plate with the round end facing outward.

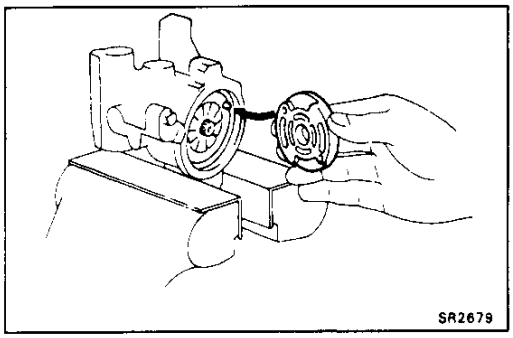

8. INSTALL SIDE REAR PLATE

(a) Coat a new O–ring with power steering fluid.
(b) Install the O–ring to the plate.
(c) Align the holes of the plate and 2 straight pins, and install the plate.

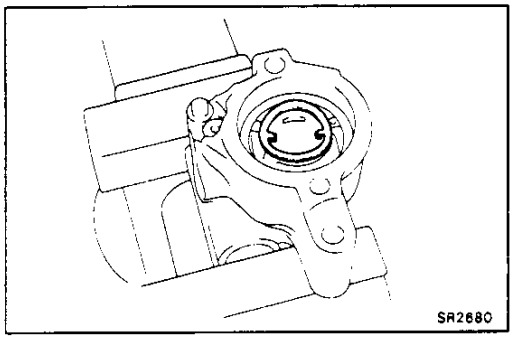

9. INSTALL WAVE WASHER

Install the washer so that its protrusions fit into the slots in the side rear plate.

Downloaded from www.Manualslib.com manuals search engine

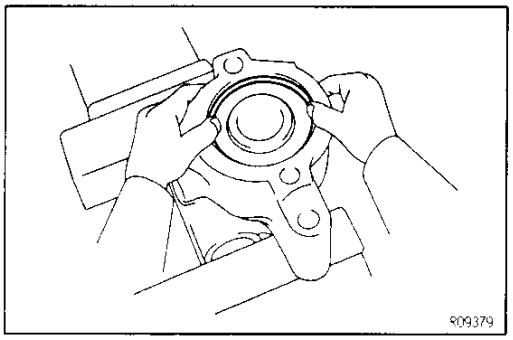

10. INSTALL REAR HOUSING

(a) Coat a new O–ring with power steering fluid.
(b) Install the O–ring to the housing.
(c) Using a plastic hammer, tap in the housing.
(d) Install a new snap ring.

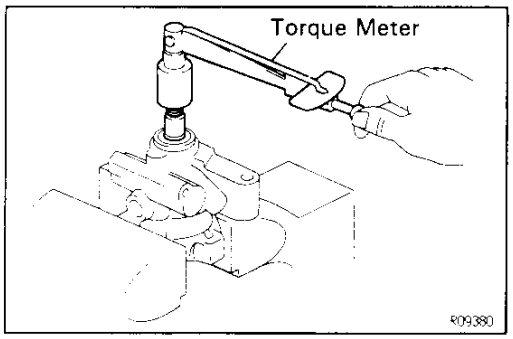

11. MEASURE VANE PUMP SHAFT ROTATING TORQUE

(a) Using a torque meter, check that the shaft rotates smoothly without abnormal noise.
(b) Temporarily install the vane pump pulley set nut, and check the rotating torque with a torque meter.
Rotating torque:
0.3 N·m (2.8 kgf·cm, 2.4 in.·lbf) or less

SR

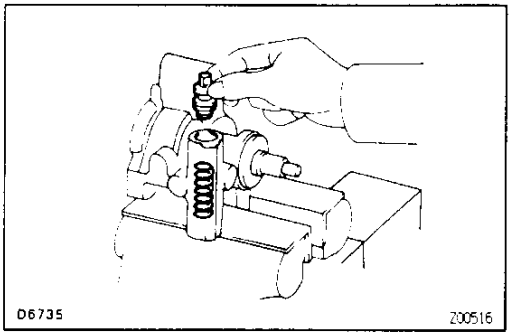

12. INSTALL SPRING AND FLOW CONTROL VALVE

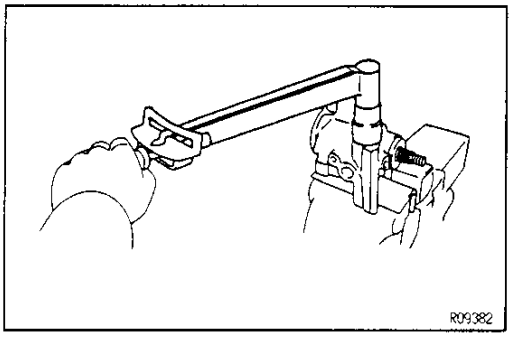

13. INSTALL PRESSURE PORT UNION

(a) Coat a new O–ring with power steering fluid.
(b) Install the O–ring to the union.
(c) Torque the union.
Torque: 69 N·m (700 kgf·cm, 51 ft·lbf)

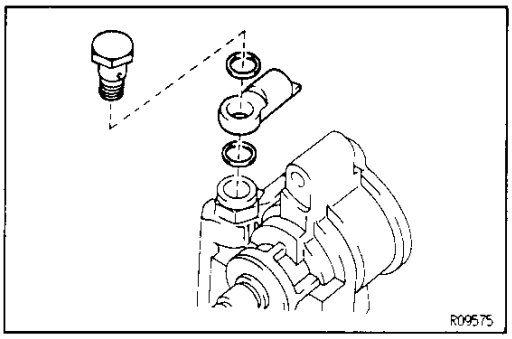

14. INSTALL PRESSURE FEED NO.2 TUBE

Torque the union bolt over 2 new gaskets.
Torque: 69 N·m (700 kgf·cm, 51 ft·lbf)

Downloaded from www.Manualslib.com manuals search engine

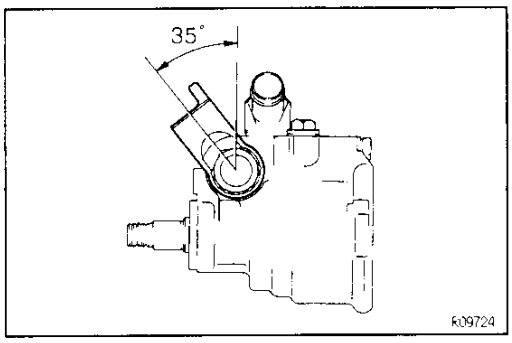

HINT: Pressure feed No.2 tube installation angle is 35°.

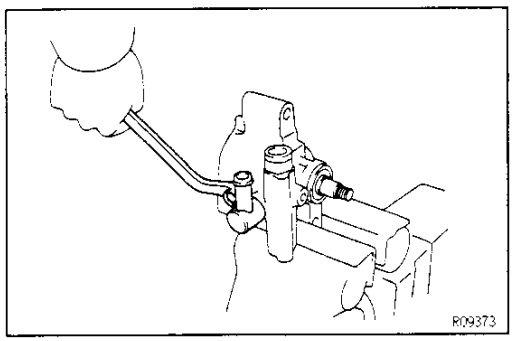

15. INSTALL SUCTION PORT UNION

(a) Coat a new O–ring with power steering fluid.
(b) Install the O–ring to the union.
(c) Install the union with the bolt.
Torque: 13 N·m (130 kgf·cm, 9 ft·lbf)

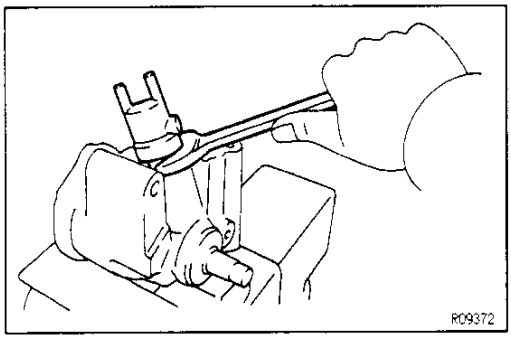

16. INSTALL AIR CONTROL VALVE

(a) Install a new union seat.
(b) Tighten the valve.
Torque: 36 N·m (370 kgf·cm, 27 ft·lbf)

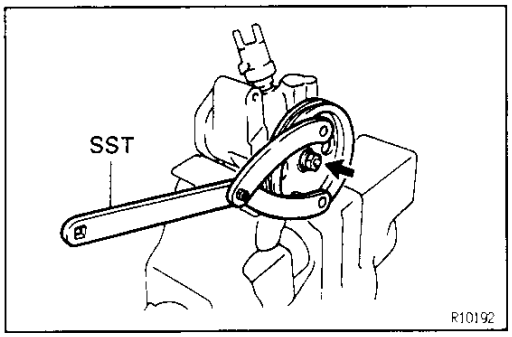

17. INSTALL VANE PUMP PULLEY

(a) Install the woodruff key to the vane pump shaft.
(b) Using SST to stop the pulley rotating, torque the nut.
SST 09960–10010
Torque: 43 N·m (440 kgf·cm,32 ft·lbf)

Downloaded from www.Manualslib.com manuals search engine

GEAR HOUSING

COMPONENTS (LHD)

MacPherson Strut Suspension:

SR0SQ-01

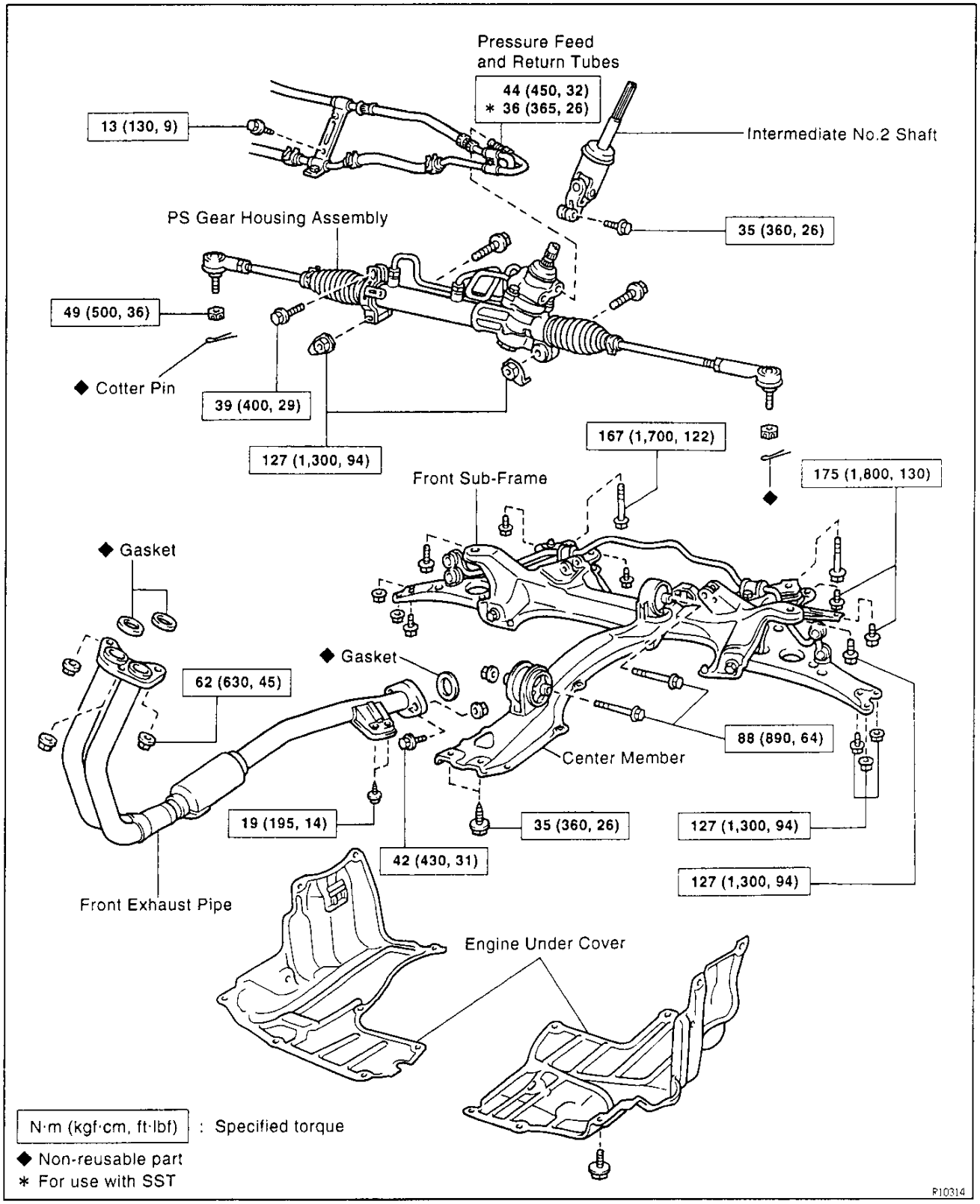

SR

Downloaded from www.Manualslib.com manuals search engine

SR0SH-01

COMPONENTS (LHD)

Super Strut Suspension:

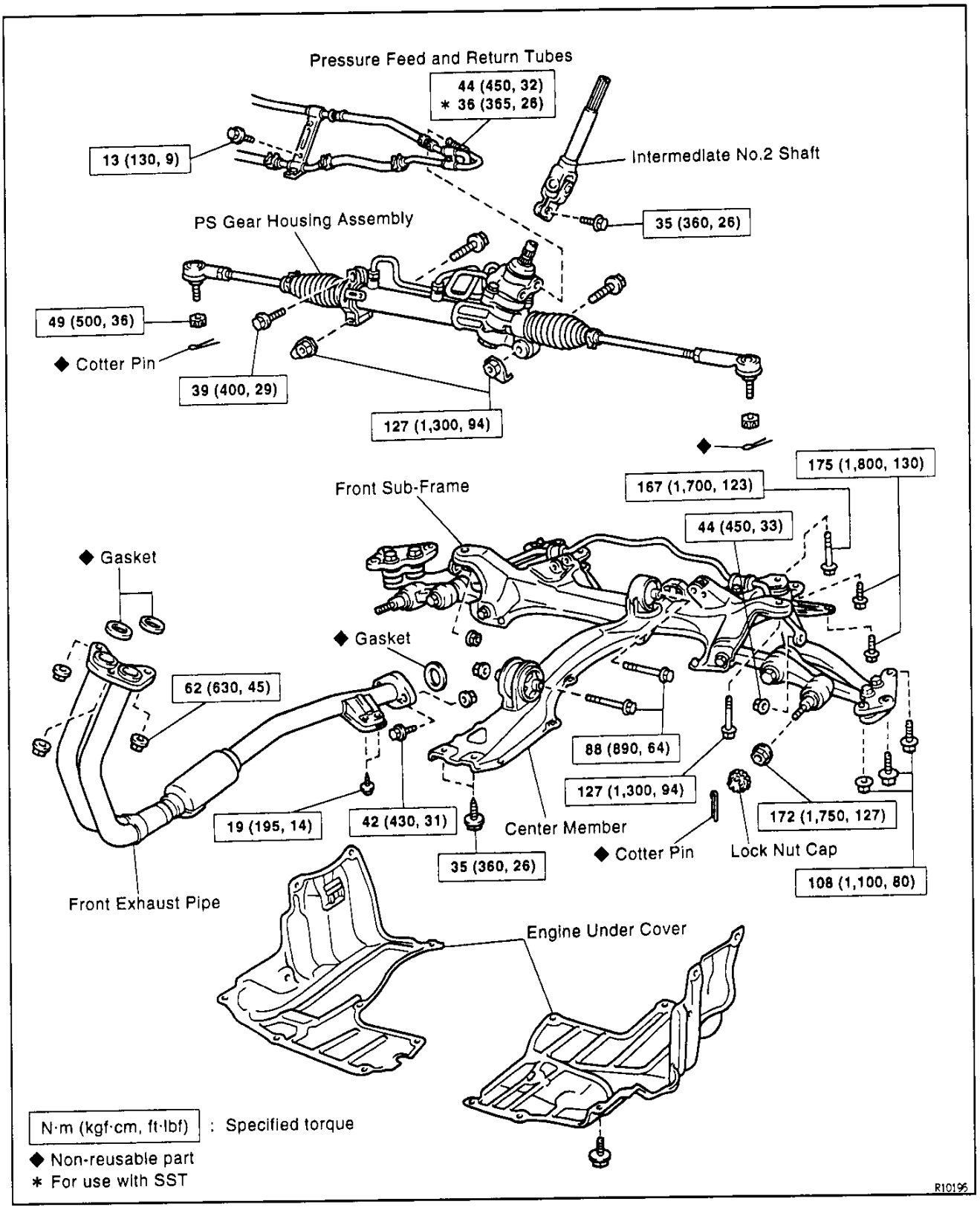

SR

Downloaded from www.Manualslib.com manuals search engine

SR06J-01

COMPONENTS (RHD)

MacPherson Strut Suspension:

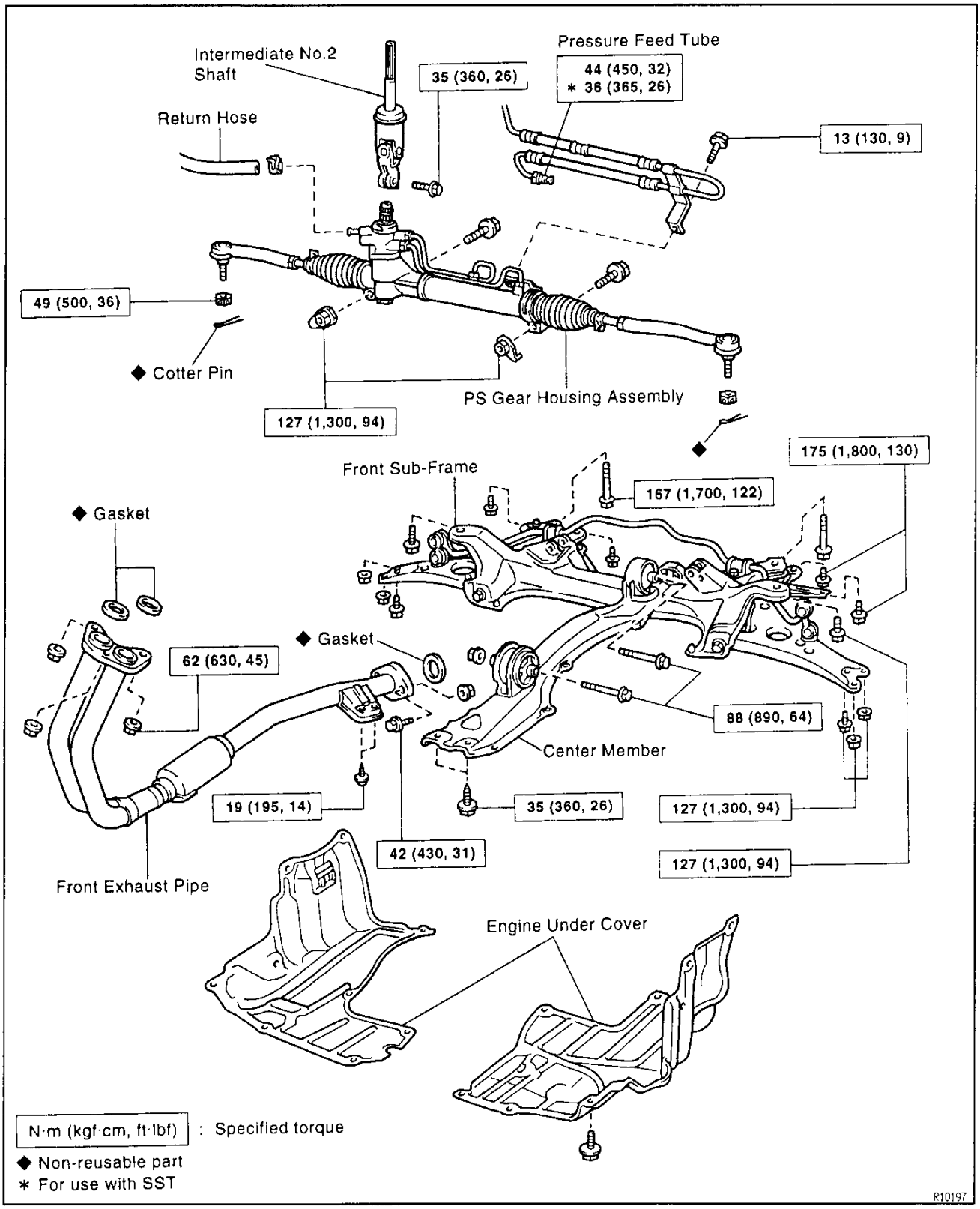

SR

Downloaded from www.Manualslib.com manuals search engine

COMPONENTS (RHD)

Super Strut Suspension:

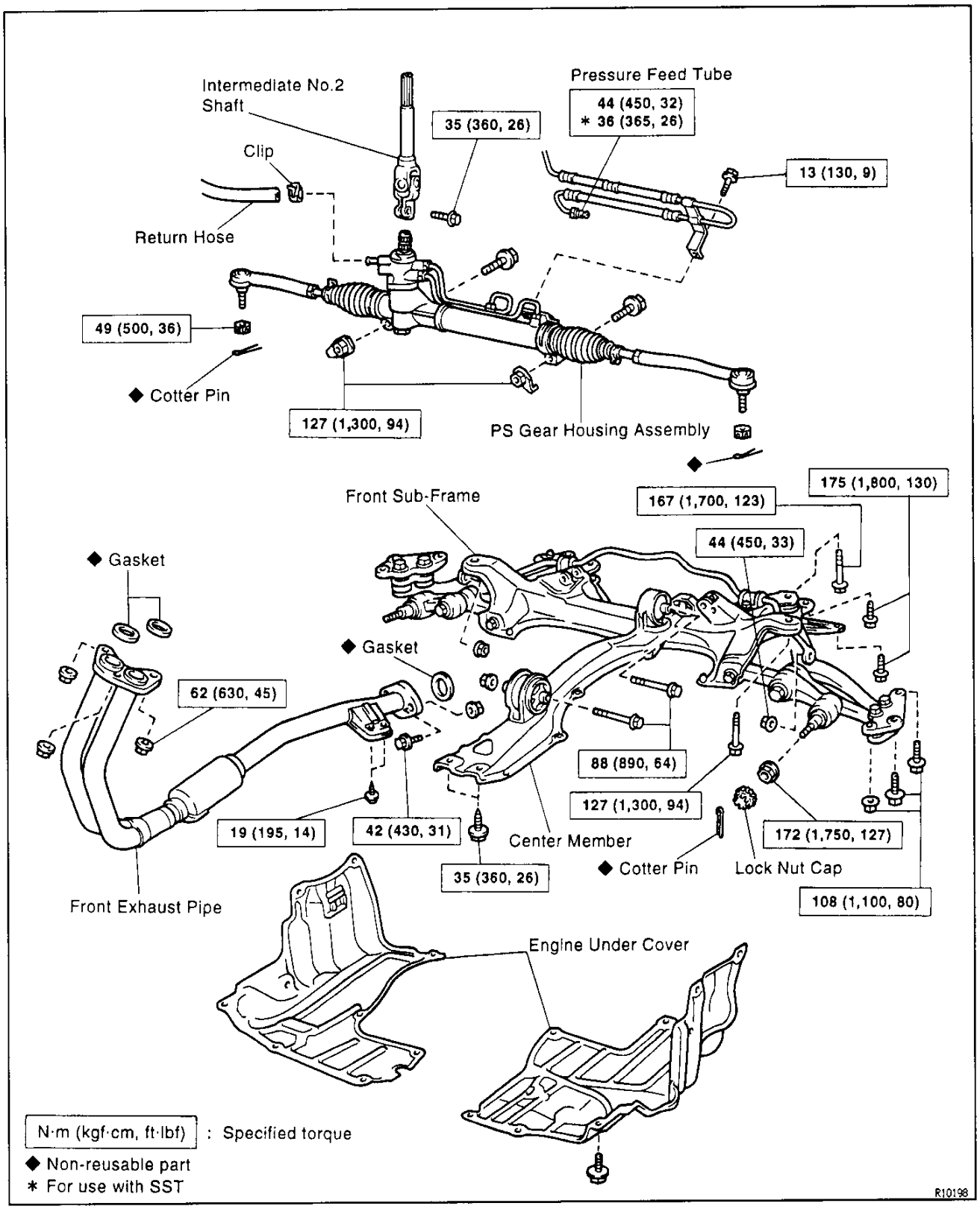

SR

Downloaded from www.Manualslib.com manuals search engine

SR0U2-01

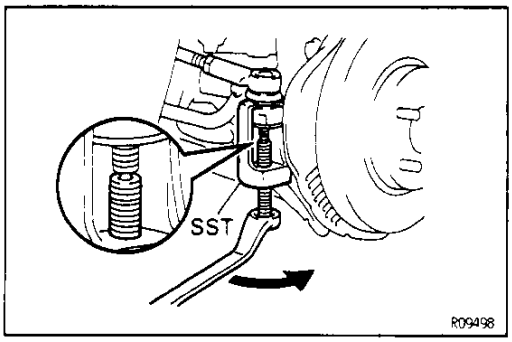

MAIN POINTS OF REMOVAL AND INSTALLATION

NOTICE: If the centering is done without removing the steering wheel, use the procedure below to make sure the steering wheel is firmly fixed in position and cannot turn.

1. DISCONNECT TIE ROD ENDS

(a) Remove the cotter pin and nut.

(b) Using SST, disconnect the tie rod end from the knuckle arm.
SST 09610–20012

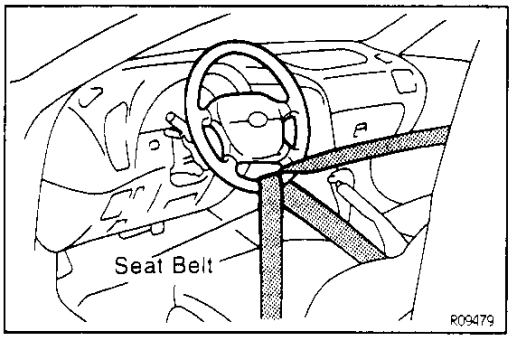

2. DISCONNECT INTERMEDIATE NO.2 SHAFT

(a) Position the front wheels facing straight ahead.

(b) Using the seat belt of the driver's seat, fix the steering wheel so that it does not turn.

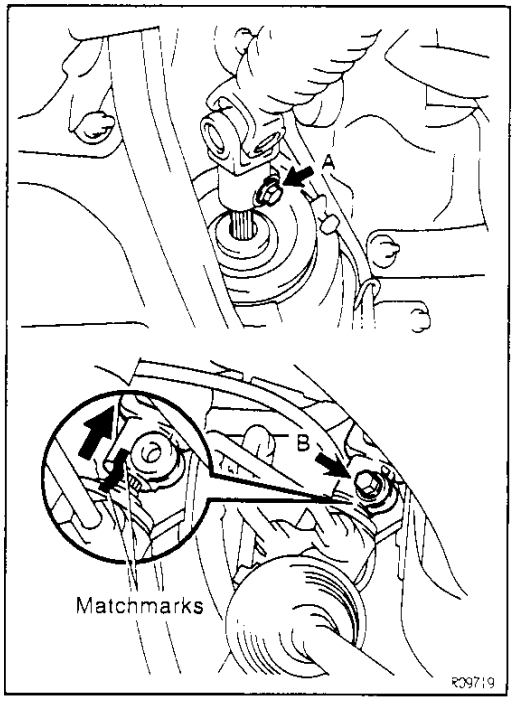

(c) Place matchmarks on the No.2 shaft and control valve shaft.

(d) Loosen bolt A and remove bolt B.

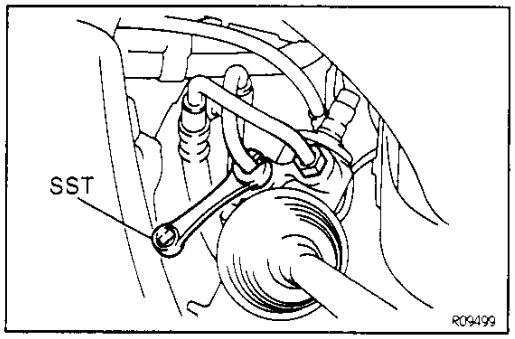

3. DISCONNECT PRESSURE FEED AND RETURN TUBES

Using SST, disconnect the tube.
SST 09631–22020

Downloaded from www.Manualslib.com manuals search engine

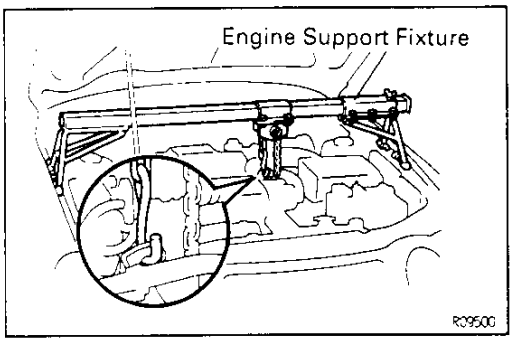

4. SUPPORT ENGINE

Using an engine support fixture, support the engine.

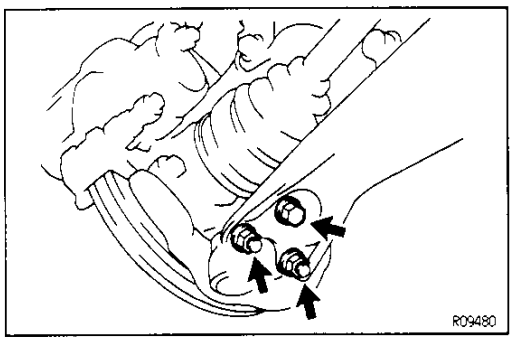

5. DISCONNECT RIGHT AND LEFT LOWER ARMS

MacPherson Strut Suspension:

(a) Remove the bolt and 2 nuts.

(b) Disconnect the arm from the lower ball joint.

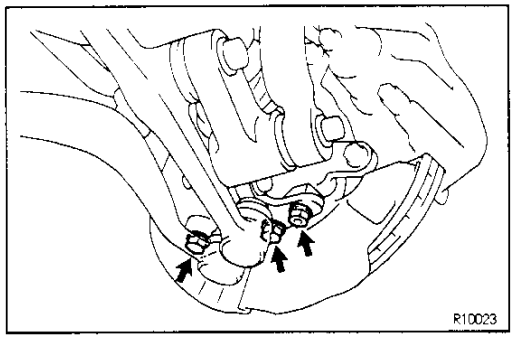

Super Strut Suspension:

(a) Remove the nut and 2 bolts.

(b) Disconnect the steering knuckle from the lower ball joint attachment.

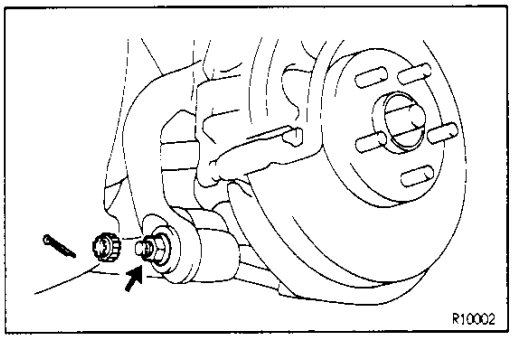

(c) Remove the cotter pin and lock nut cap.

(d) Remove the nut.

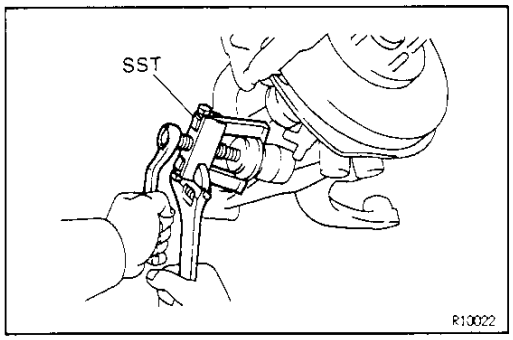

(e) Using SST, disconnect the camber control arm from the shock absorber.
SST 09628–62011

Downloaded from www.Manualslib.com manuals search engine

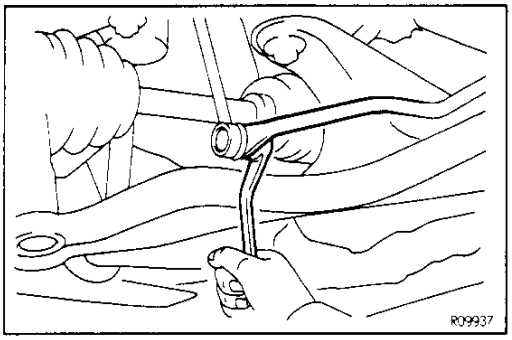

(f) Remove the nut and disconnect the stabilizer bar link from the stabilizer.
HINT: If the ball joint stud turns together with the nut, use a hexagon wrench to hold the stud.

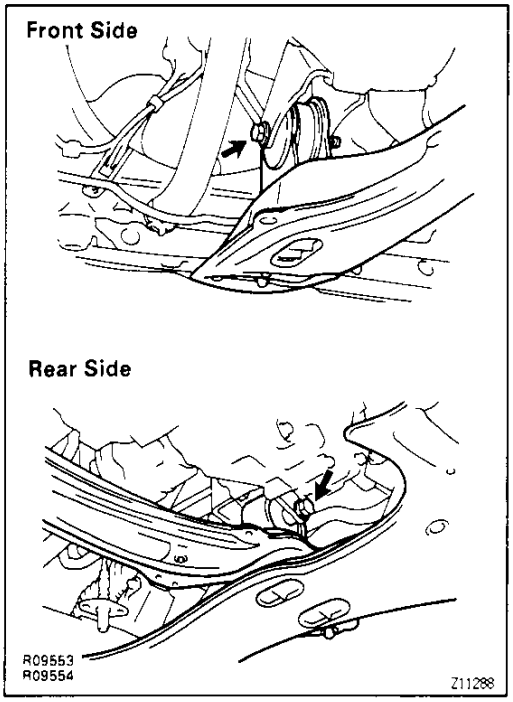

6. DISCONNECT 2 ENGINE MOUNTINGS

Front side:

Remove the bolt and nut.

Rear side:

Remove the bolt.

7. REMOVE FRONT SUB–FRAME WITH PS GEAR ASSEMBLY

Remove the 10 bolts.

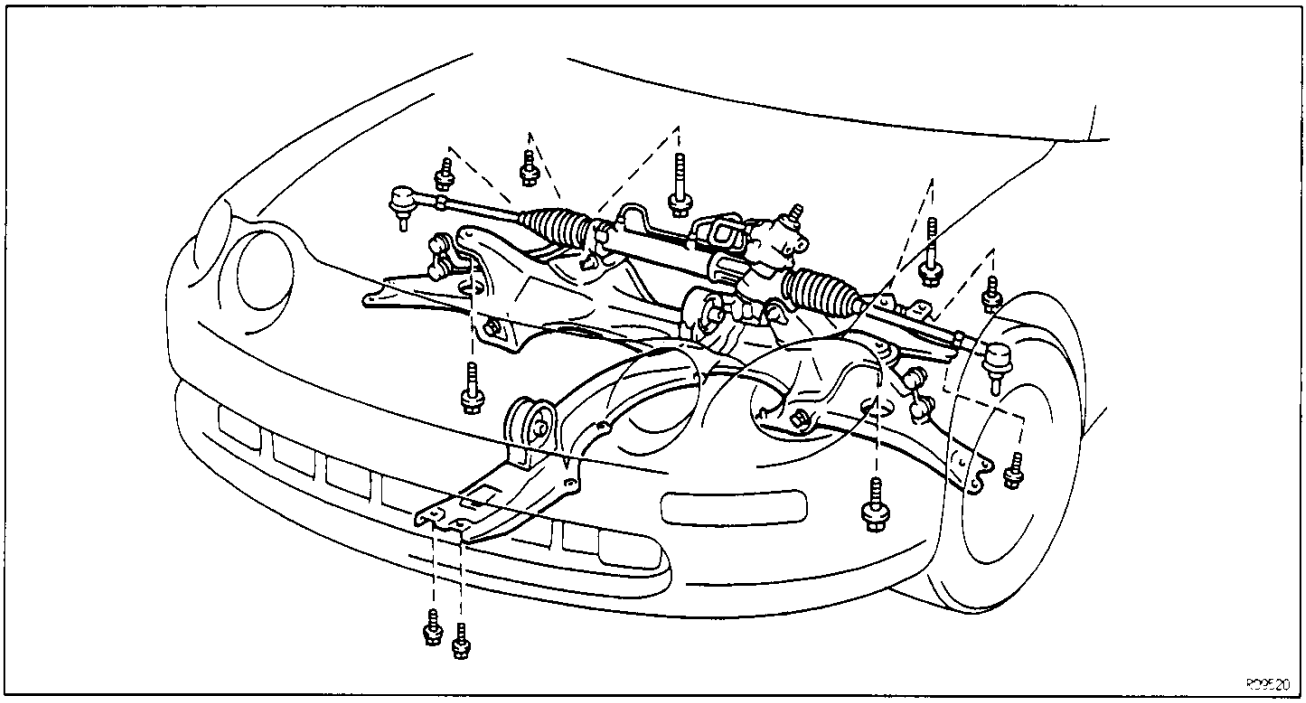

Downloaded from www.Manualslib.com manuals search engine

8. INSTALL PS GEAR HOUSING ASSEMBLY

(a) Set the housing assembly so that it matches the dimensions shown below, with the housing assembly at the center point.
Dimension A: 30.5 mm (1.20 in.)
Dimension B: 451.5 mm (17.78 in.)

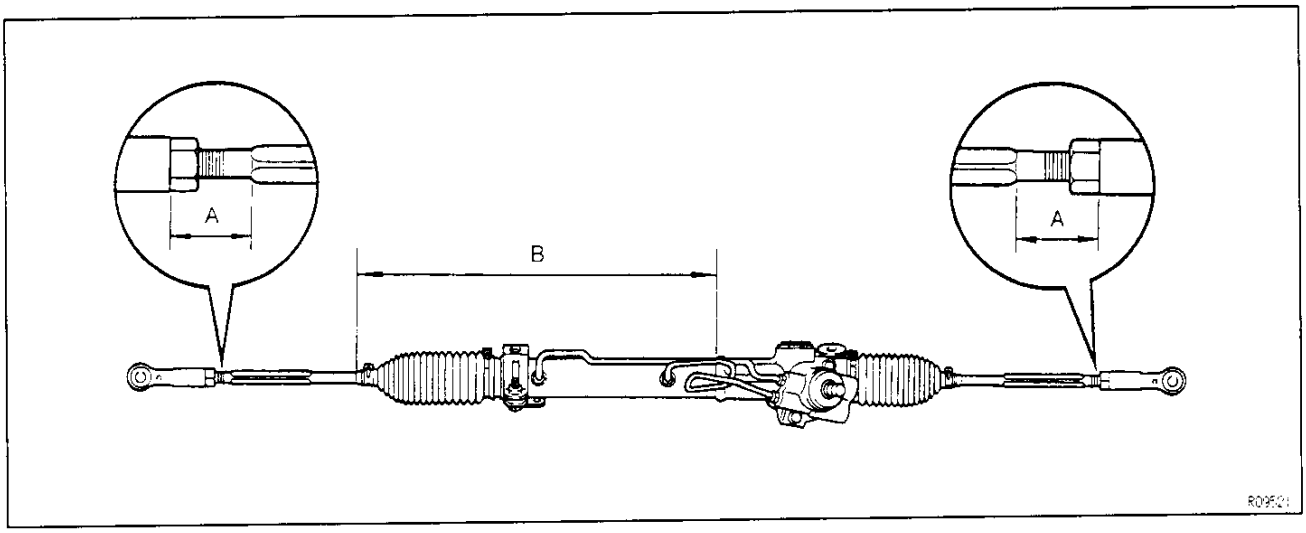

(b) Install the housing assembly to the front sub–frame with the 2 bolts and nuts.
Torque: 127 N·m (1,300 kgf·cm, 94 ft·lbf)

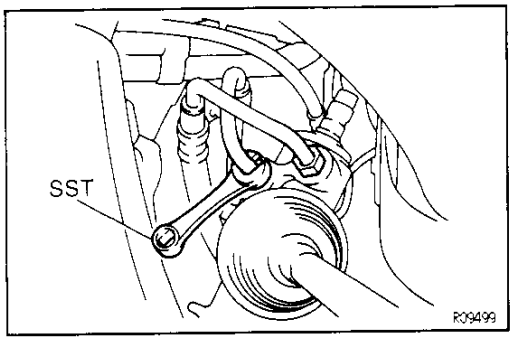

9. CONNECT PRESSURE FEED AND RETURN TUBES

Using SST, connect the tube.
SST 09631–22020
Torque: 36 N·m (365 kgf·cm, 26 ft·lbf)
HINT: Use a torque wrench with a fulcrum length of 300 mm (11.81 in.).

Downloaded from www.Manualslib.com manuals search engine

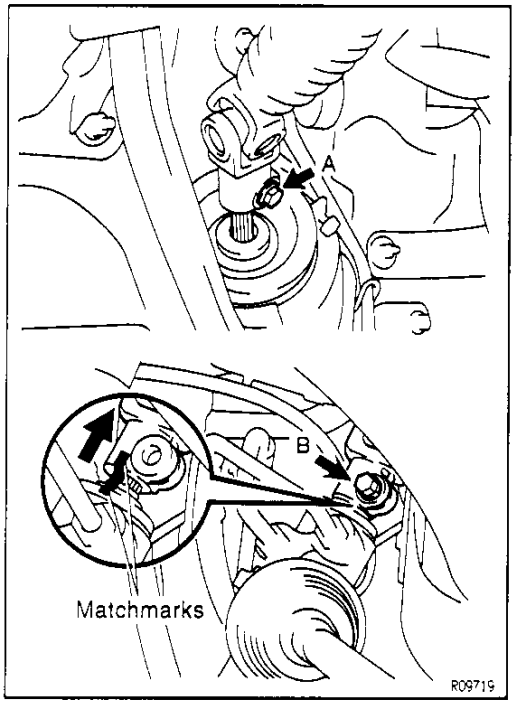

10. CONNECT INTERMEDIATE NO.2 SHAFT

(a) Align the matchmarks on the No.2 shaft and control valve shaft, and connect them.

(b) Torque the 2 bolts.
Torque: 35 N·m (360 kgf·cm, 26 ft·lbf)

11. BLEED POWER STEERING SYSTEM
(See page SR–41)

12. CHECK STEERING WHEEL CENTER POINT

13. CHECK FRONT WHEEL ALIGNMENT
(See SA section)

Downloaded from www.Manualslib.com manuals search engine

SRORC-02

COMPONENTS (LHD)

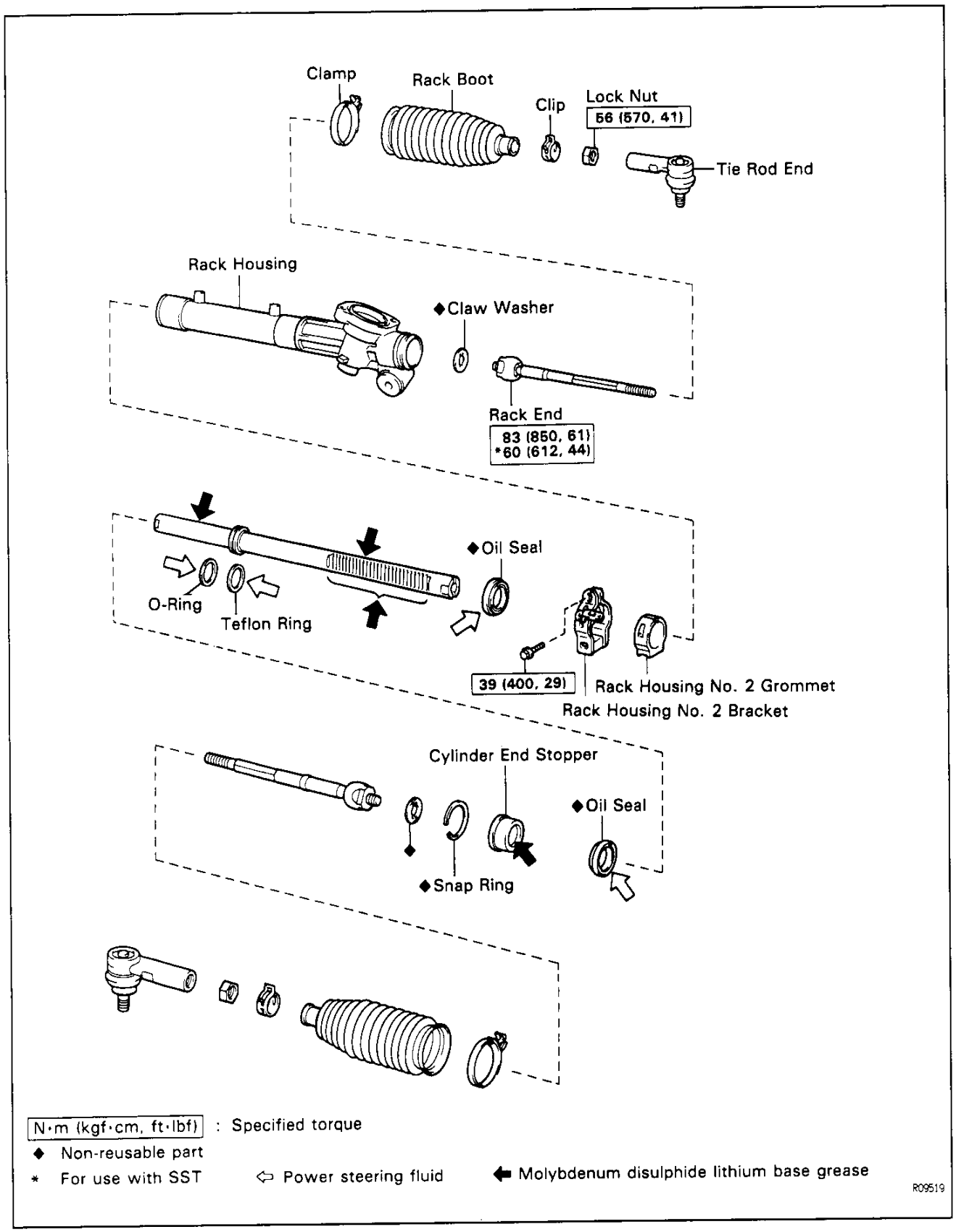

SR

Downloaded from www.Manualslib.com manuals search engine

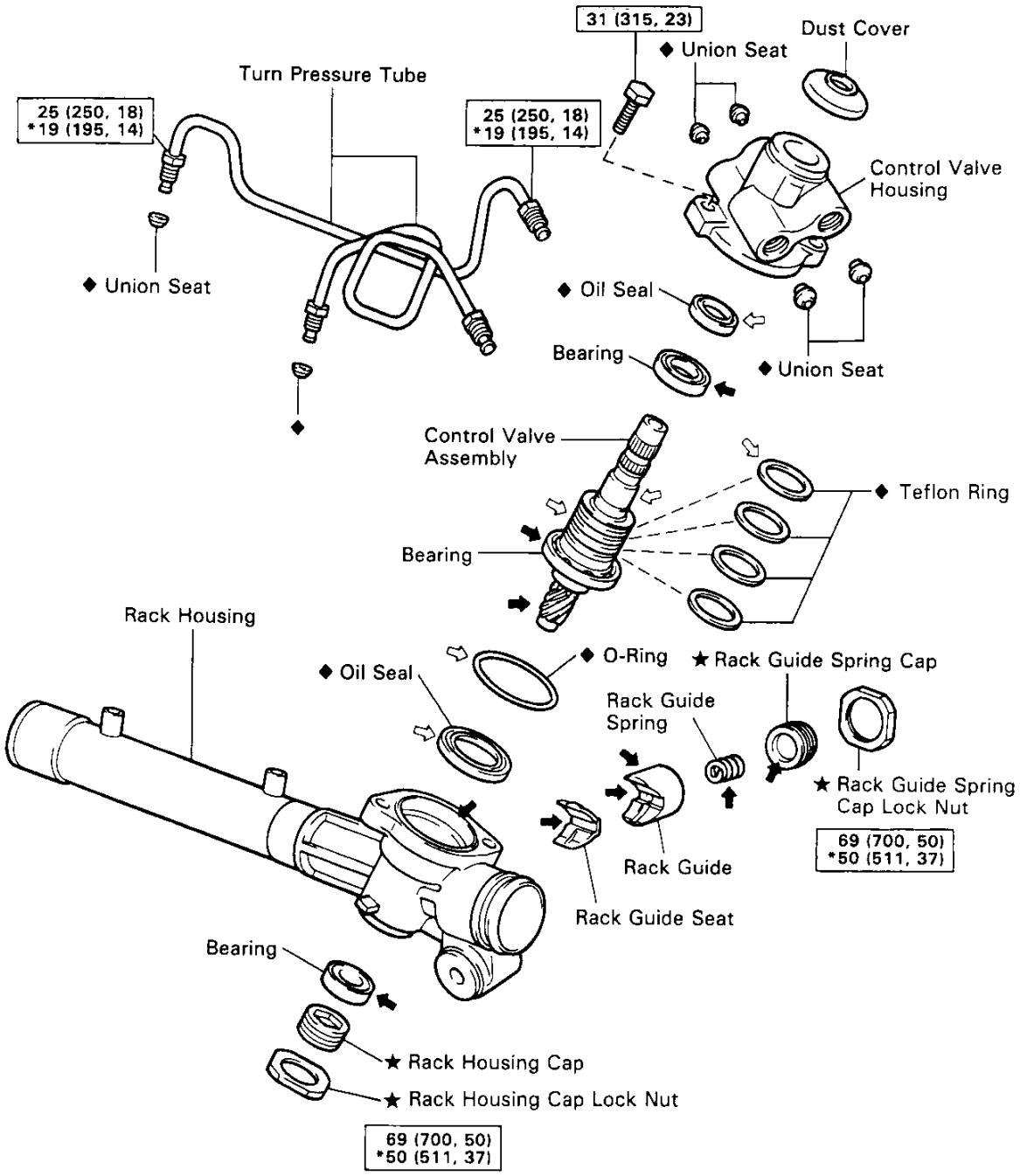

N·m (kgf·cm, ft·lbf) : Specified torque
◆ Non-reusable part
★ Precoated part
* For use with SST
⬅ Molybdenum disulphide lithium base grease
⇦ Power steering fluid

SR

Downloaded from www.Manualslib.com manuals search engine

SR05M-01

COMPONENTS (RHD)

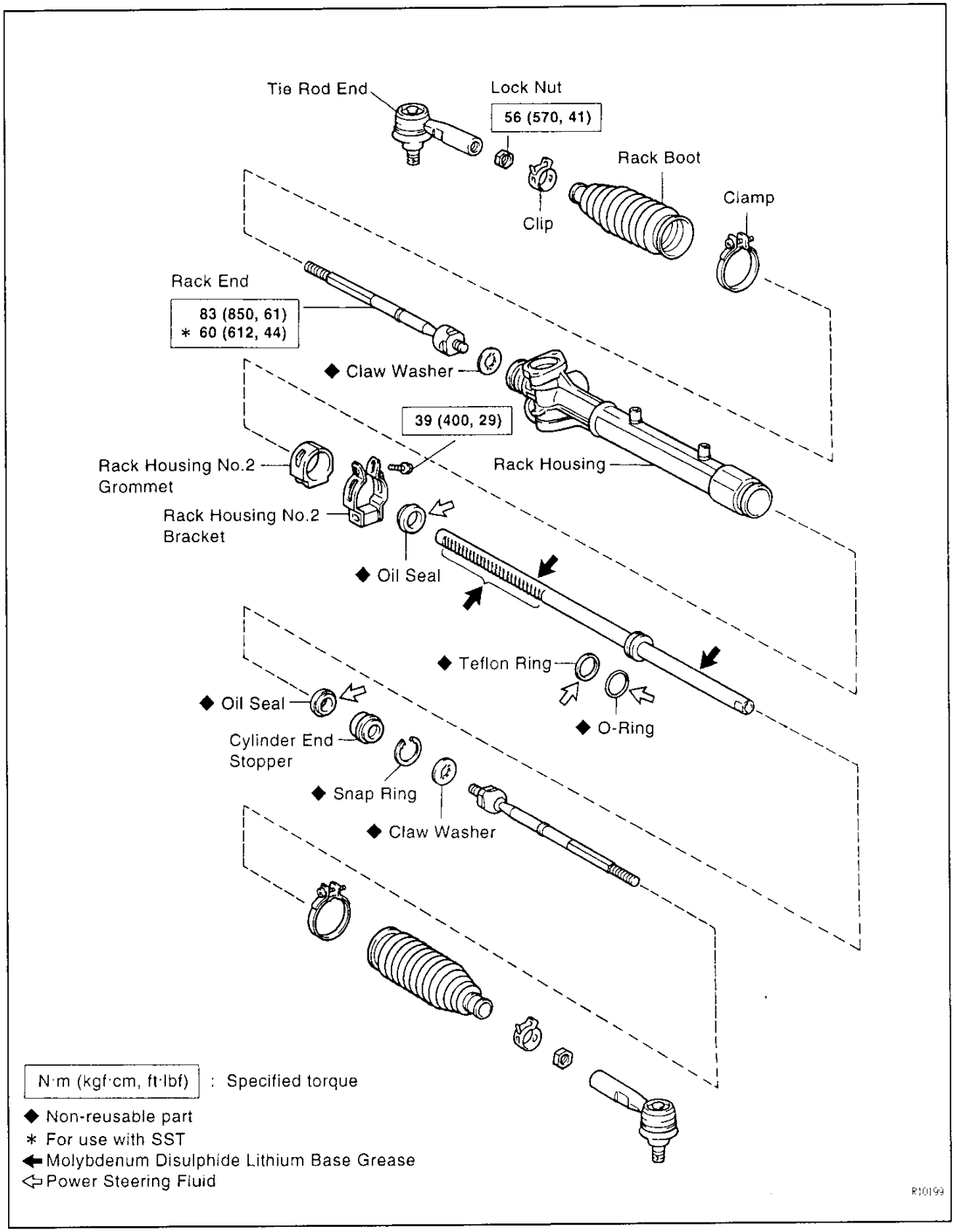

SR

Downloaded from www.Manualslib.com manuals search engine

SR

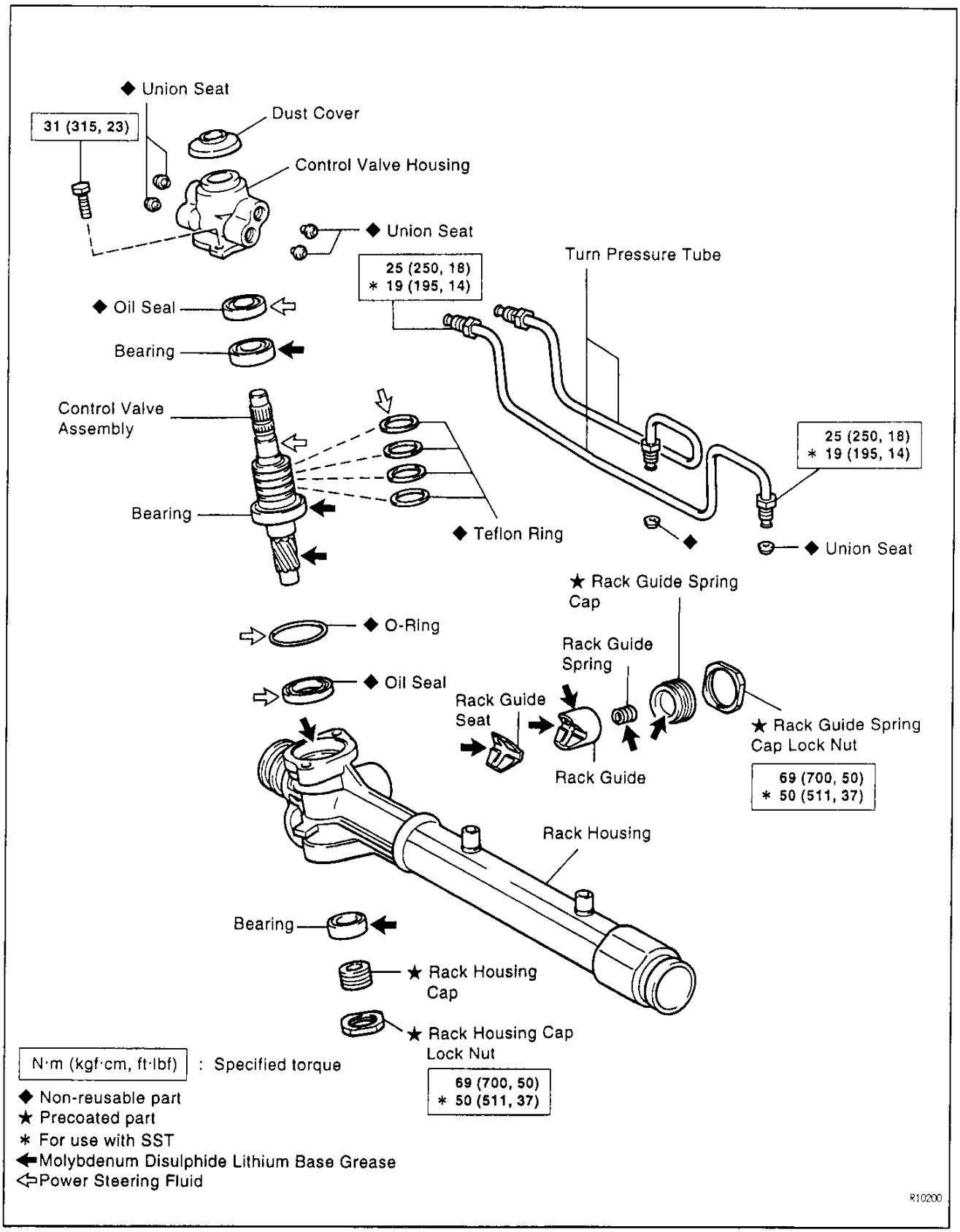

Downloaded from www.Manualslib.com manuals search engine

SR06N-01

PS GEAR HOUSING DISASSEMBLY

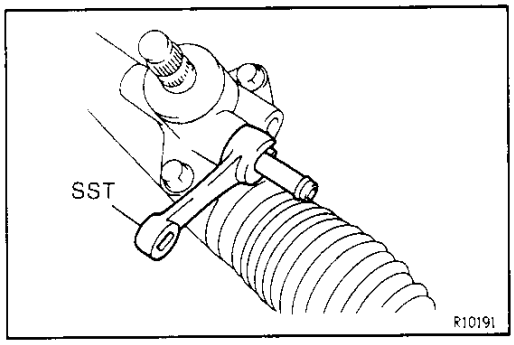

1. REMOVE RETURN TUBE NO.1 SUB–ASSEMBLY RHD:

Using SST, remove the tube.
SST 09631–22020

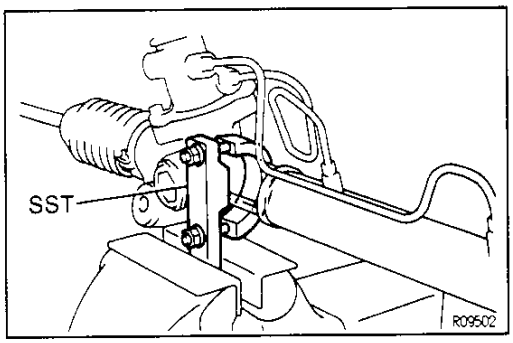

2. SECURE PS GEAR HOUSING ASSEMBLY IN VISE

Using SST, secure the housing assembly in a vise.
SST 09612–00012

SR

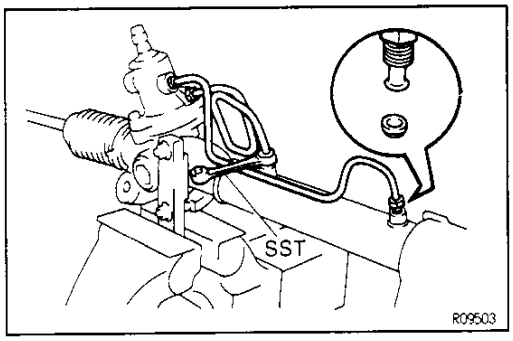

3. REMOVE 2 TURN PRESSURE TUBES

(a) Using SST, remove the tube.
SST 09633–00020

(b) Remove the 2 union seats from the rack housing.

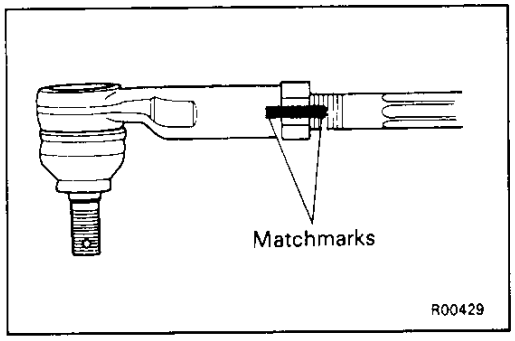

4. REMOVE TIE ROD ENDS AND LOCK NUT

(a) Place matchmarks on the tie rod end and rack end.

(b) Loosen the lock nut.

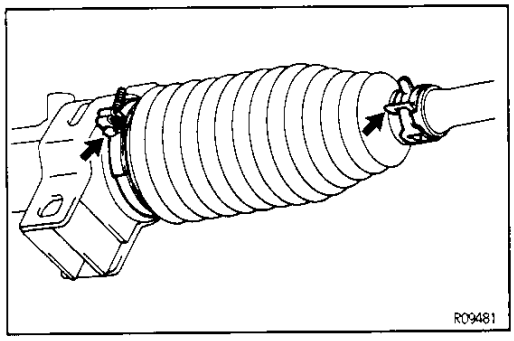

5. REMOVE RACK BOOTS

(a) Remove the clip.

(b) Loosen the clamp.

(c) Remove the boot.

NOTICE: Be careful not to damage the boots and rack housing.

(d) Remove the clamp from the boot.

(e) Mark the right and left boots.

Downloaded from www.Manualslib.com manuals search engine

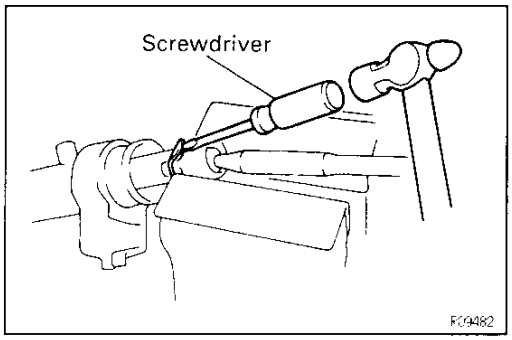

6. REMOVE RACK ENDS AND CLAW WASHERS

(a) Secure the rack end in a vise.
NOTICE: Do not tighten the vise too tight.

(b) Using a screwdriver and hammer, unstake the washer.
NOTICE: Avoid any impact to the steering rack.

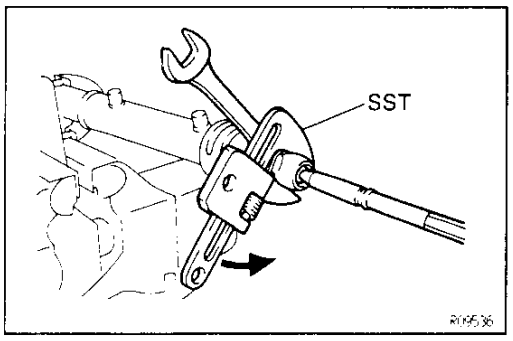

(c) Using a spanner (22 mm) to hold the steering rack steady, and using SST, remove the rack end.
SST 09922–10010
NOTICE: Use SST 09922–10010 in the direction shown in the illustration.

(d) Mark the right and left rack ends accordingly.

SR

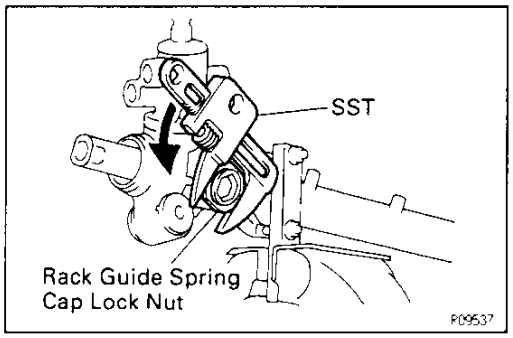

7. REMOVE RACK GUIDE SPRING CAP LOCK NUT

Using SST, remove the nut.
SST 09922–10010
NOTICE: Use SST 09922–10010 in the direction shown in the illustration.

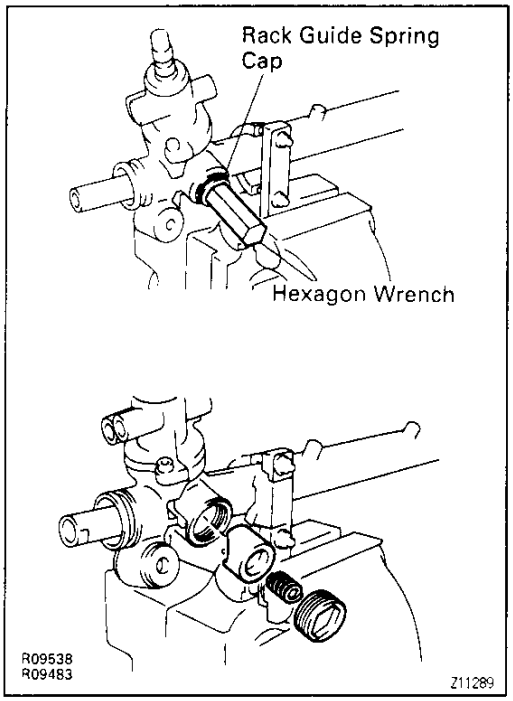

8. REMOVE RACK GUIDE SPRING CAP, RACK GUIDE SPRING AND RACK GUIDE

Using a hexagon wrench (24 mm), remove the cap.

Downloaded from www.Manualslib.com manuals search engine

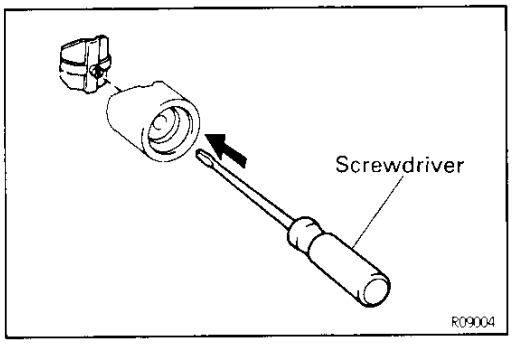

9. REMOVE RACK GUIDE SEAT

Using a screwdriver, remove the seat from the rack guide.

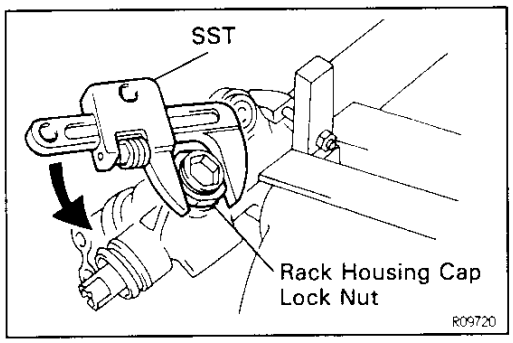

10. REMOVE RACK HOUSING CAP LOCK NUT

Using SST, remove the nut.

SST 09922–10010

NOTICE: Use SST 09922–10010 in the direction shown in the illustration.

SR

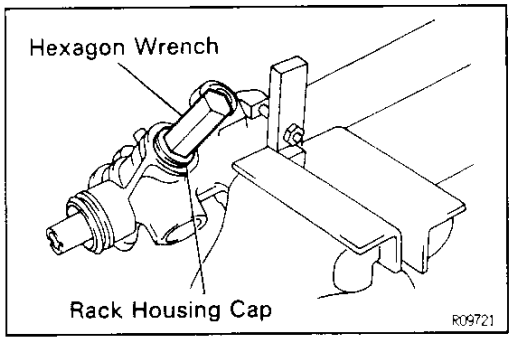

11. REMOVE RACK HOUSING CAP

Using a hexagon wrench (24 mm), remove the cap.

12. REMOVE BEARING

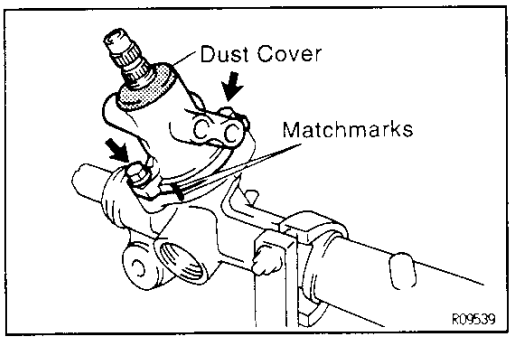

13. REMOVE CONTROL VALVE HOUSING WITH CONTROL VALVE ASSEMBLY

(a) Remove the dust cover.

(b) Place matchmarks on the valve housing and rack housing.

(c) Remove the 2 bolts.

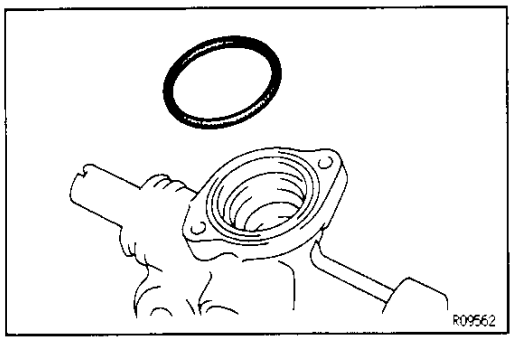

(d) Remove the O–ring from the rack housing.

Downloaded from www.Manualslib.com manuals search engine

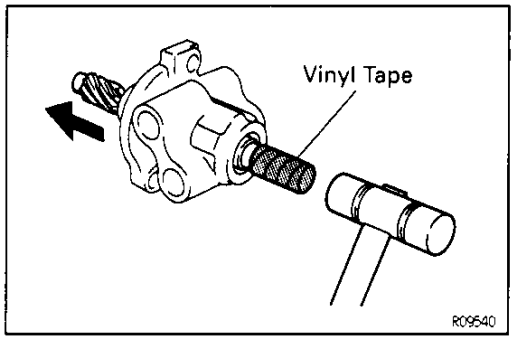

14. REMOVE CONTROL VALVE ASSEMBLY

(a) To prevent oil seal lip damage, wind vinyl tape on the serrated part of the valve shaft.

(b) Using a plastic hammer, tap out the valve assembly from the valve housing.

NOTICE: Be careful not to damage the oil seal lip.

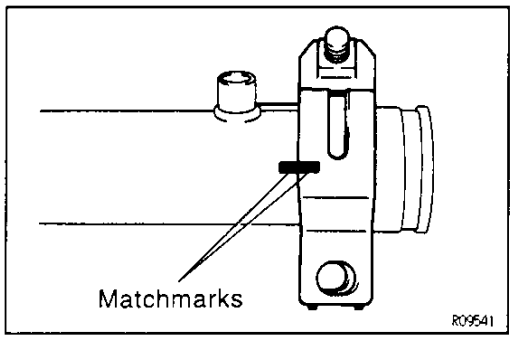

15. REMOVE RACK HOUSING NO.2 BRACKET

(a) Place matchmarks on the bracket and rack housing.

SR

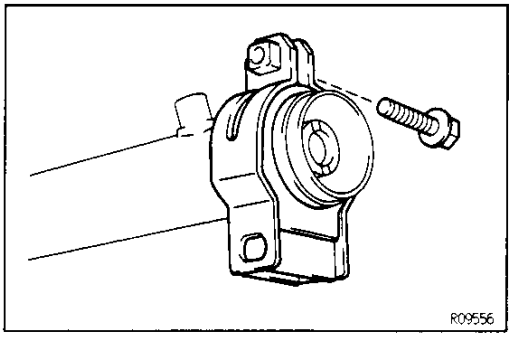

(b) Remove the bolt.

16. REMOVE RACK HOUSING NO.2 GROMMET

Remove the grommet from the rack housing No.2 bracket.

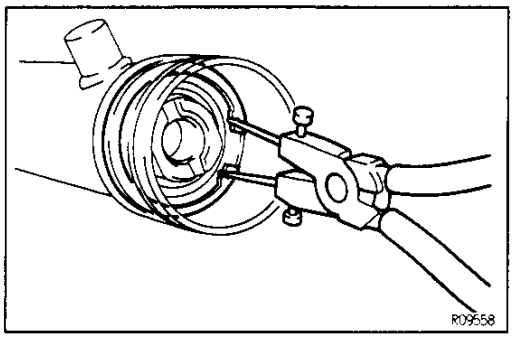

17. REMOVE CYLINDER END STOPPER

(a) Using snap ring pliers, remove the snap ring.

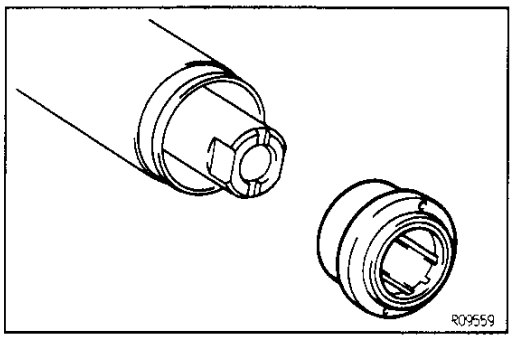

(b) Remove the stopper from the rack housing.

Downloaded from www.Manualslib.com manuals search engine

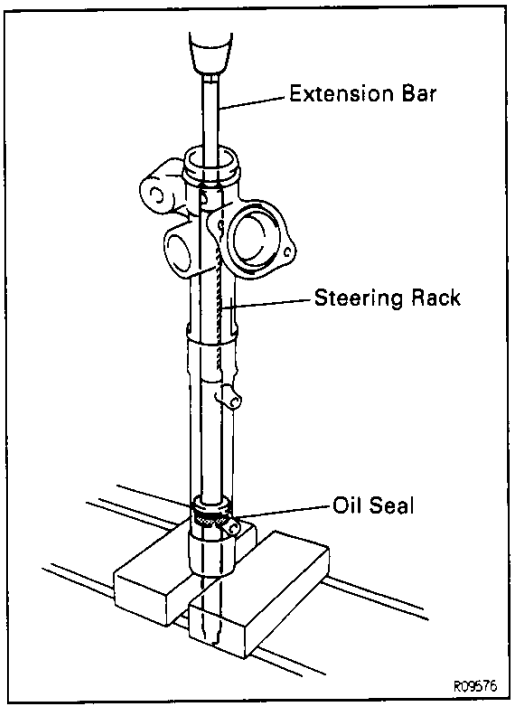

18. REMOVE STEERING RACK WITH OIL SEAL

Using an extension bar, press out the rack with the oil seal.

NOTICE: Take care not to drop the rack.

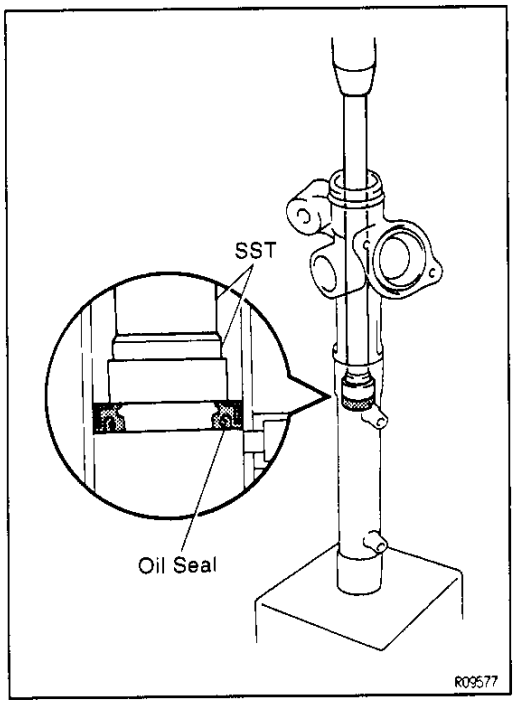

19. REMOVE OIL SEAL

Using SST, press out the oil seal.

SST 09631 – 12020, 09631 – 20031

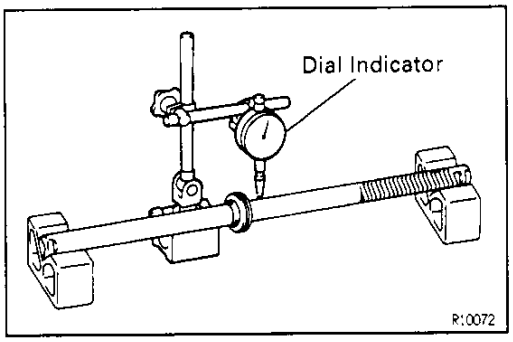

PS GEAR HOUSING INSPECTION AND REPLACEMENT

SR05F-01

1. INSPECT STEERING RACK

(a) Using a dial indicator, check the rack for runout and for teeth wear and damage.

Maximum runout: 0.15 mm (0.006 in.)

(b) Check the back surface for wear and damage.

If faulty, replace it.

Downloaded from www.Manualslib.com manuals search engine

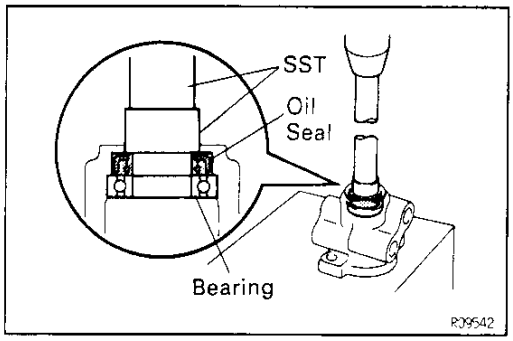

2. IF NECESSARY, REPLACE CONTROL VALVE HOUSING OIL SEAL AND BEARING

(a) Using SST, press out the bearing and oil seal.
SST 09620–30010 (09631–00020)
09630–24013 (09620–24010)

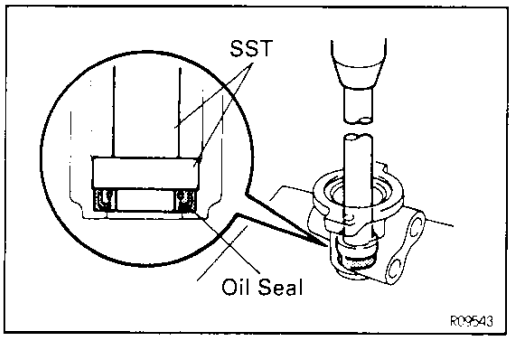

(b) Coat a new oil seal lip with power steering fluid.
(c) Using SST, press in the oil seal.
SST 09620–30010 (09631–00020)
09630–24013 (09620–24020)
NOTICE: Make sure you install the oil seal facing the correct direction.

SR

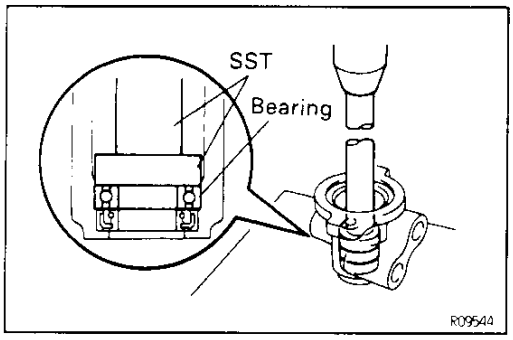

(d) Using SST, press in a new bearing.
SST 09620–30010 (09631–00020)
09630–24013 (09620–24030)

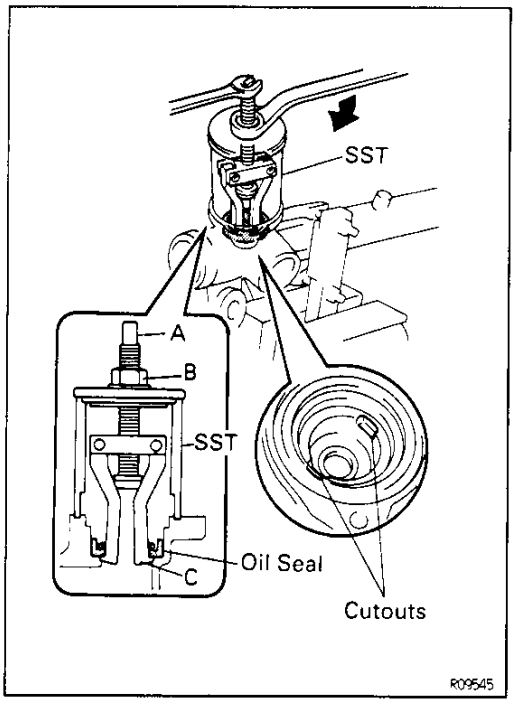

3. IF NECESSARY, REPLACE RACK HOUSING OIL SEAL

(a) Set the SST as shown in the illustration.
SST 09612–30012

(b) Turn A clockwise and engage the tips of C on the oil seal.
HINT: Apply the tips of C to the cutouts in the rack housing.

(c) Using a spanner (8 mm), keep A fixed while turning nut B clockwise, and remove the oil seal.
NOTICE: Be careful not to damage the rack housing.

Downloaded from www.Manualslib.com manuals search engine

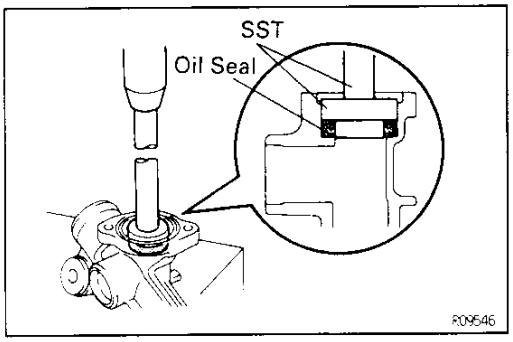

(d) Coat a new oil seal lip with power steering fuild.
(e) Using SST, press in the oil seal.
SST 09620–30010 (09624–30010)
(09631–00020)
NOTICE: Make sure you install the oil seal facing the correct direction.

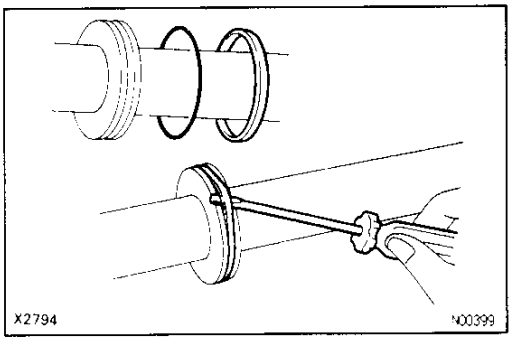

4. IF NECESSARY, REPLACE TEFLON RING AND O–RING

(a) Using a screwdriver, remove the teflon ring and O–ring from the steering rack.
NOTICE: Be careful not to damage the groove for the teflon ring.
(b) Coat a new O–ring with power steering fluid, and install it.

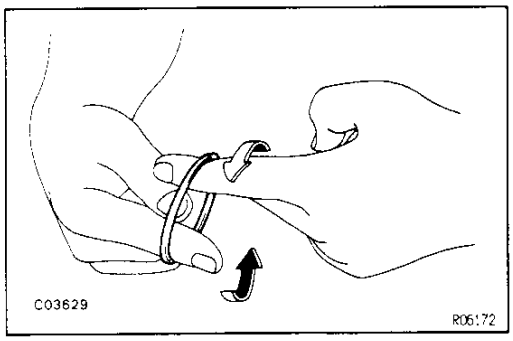

(c) Expand a new teflon ring with your fingers.
NOTICE: Be careful not to over–expand the ring.

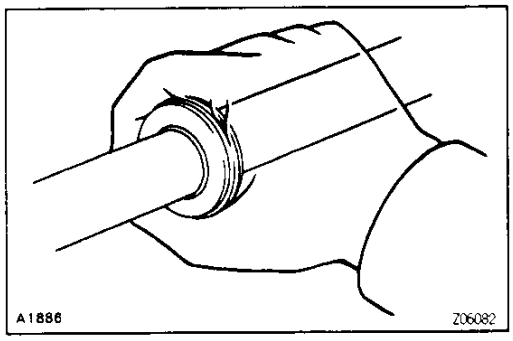

(d) Coat the ring with power steering fluid.
(e) Install the ring to the steering rack, and snug it down with your fingers.

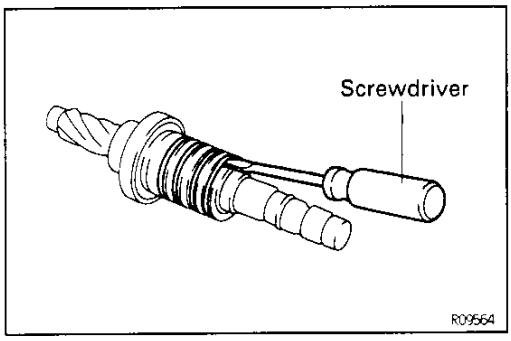

5. IF NECESSARY, REPLACE 4 TEFLON RINGS

(a) Using a screwdriver, remove the rings from the control valve assembly.
NOTICE: Be careful not to damage the grooves for the ring.

Downloaded from www.Manualslib.com manuals search engine

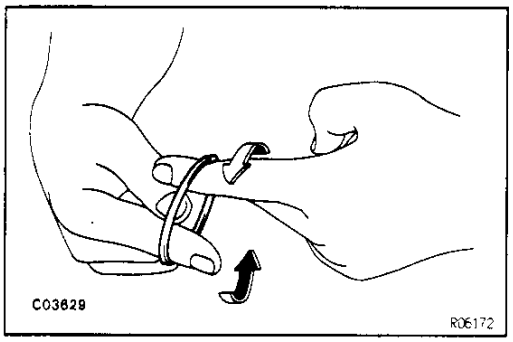

(b) Expand 4 new teflon rings with your fingers.
NOTICE: Be careful not to over–expand the rings.

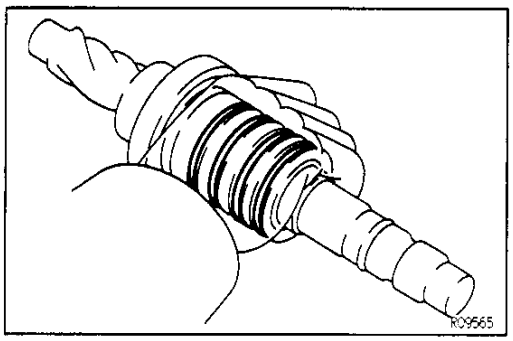

(c) Coat the rings with power steering fluid.
(d) Install the rings to the control valve assembly, and snug them down with your fingers.

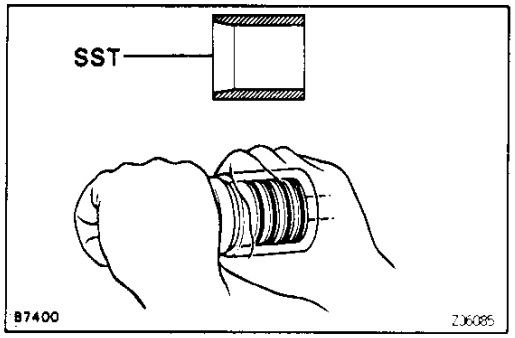

(e) Carefully slide the tapered end of SST over the rings to seat them.
SST 09631–20081
NOTICE: Be careful not to damage the rings.

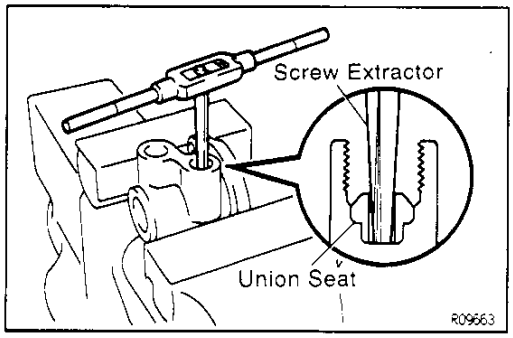

6. IF NECESSARY, REPLACE 4 UNION SEATS
(a) Secure the control valve housing in a vise.
NOTICE: Do not tighten the vise too tight.
(b) Using a screw extractor, remove the seats from the control valve housing.

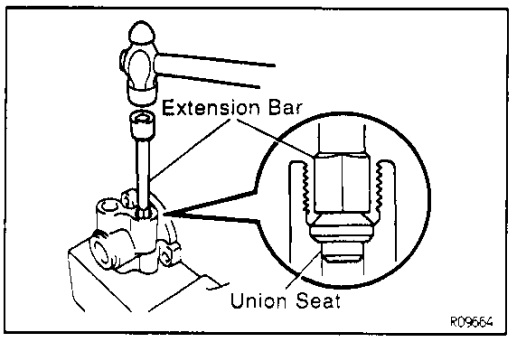

(c) Using an extension bar, tap in 4 new seats.

Downloaded from www.Manualslib.com manuals search engine

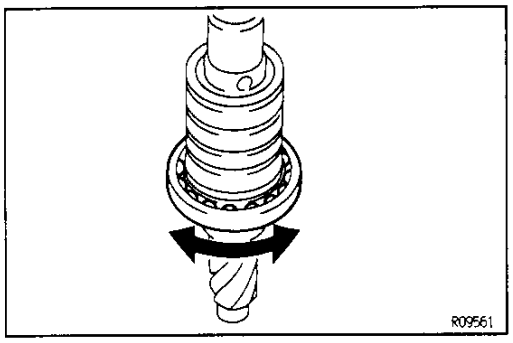

7. INSPECT CONTROL VALVE BEARING

Check the bearing rotation condition and check for abnormal noise.

If the bearing is worn or damaged, replace the control valve assembly.

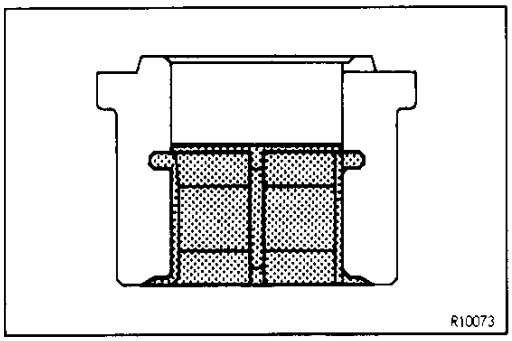

8. INSPECT CYLINDER END STOPPER BUSHING

(a) Check for wear and damage on the inside of the bushing.

If the bushing is worn or damaged, replace the cylinder end stopper.

(b) Coat inside of the bushing with molybdenum disulphide lithium base grease.

SR

SR06Q-01

PS GEAR HOUSING ASSEMBLY

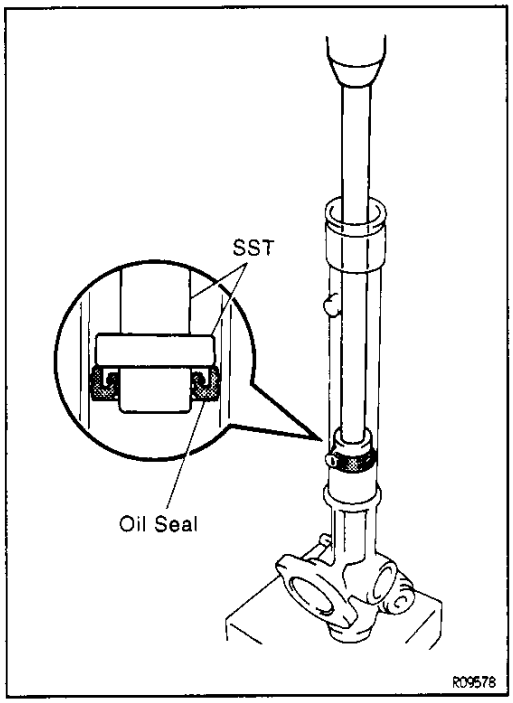

1. COAT WITH POWER STEERING FLUID OR MOLYBDENUM DISULPHIDE LITHIUM BASE GREASE
(See pages SR–79 to SR–82)

2. INSTALL OIL SEAL

(a) Coat a new oil seal lip with power steering fluid.

(b) Using SST, press in the oil seal.
SST 09631–12020, 09631–20040

NOTICE:

- **Make sure you install the oil seal facing the correct direction.**
- **Take care that the oil seal does not get reversed as you install it.**

Downloaded from www.Manualslib.com manuals search engine

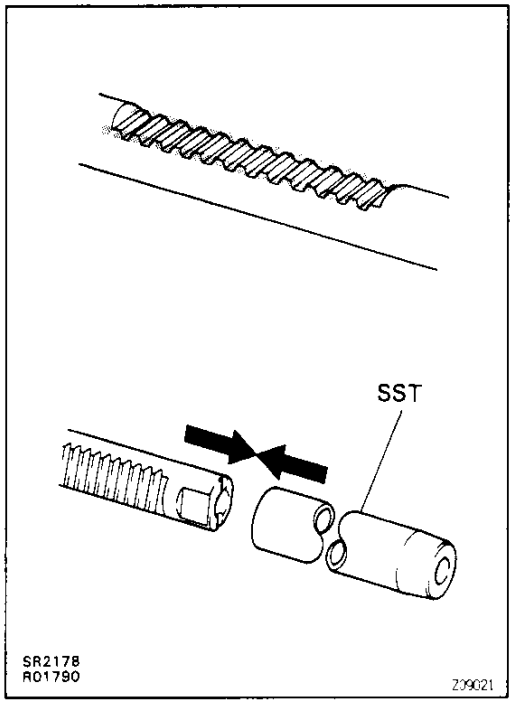

3. INSTALL STEERING RACK

(a) Install SST to the rack.
HINT: If necessary, scrape the burrs off the rack teeth end and burnish.
SST 09631 – 20051

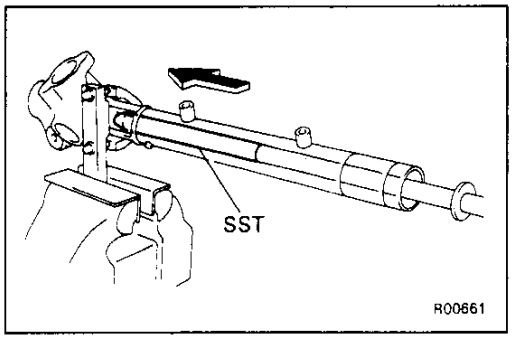

(b) Coat SST with power steering fluid.
(c) Install the rack into the rack housing.
(d) Remove SST.

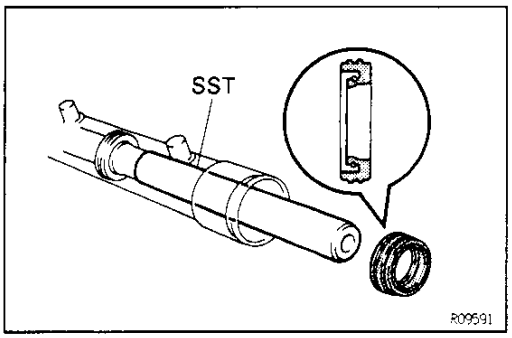

4. INSTALL OIL SEAL

(a) To prevent oil seal lip damage, install SST to the steering rack, and apply power steering fluid.
SST 09631 – 20051
HINT: Install SST to the steering rack side without teeth.
(b) Coat a new oil seal lip with power steering fluid.
(c) Install the oil seal.
NOTICE: Make sure you install the oil seal facing the correct direction.
(d) Remove SST.
HINT: Hold the oil seal down with your hand to prevent it coming out together with SST.

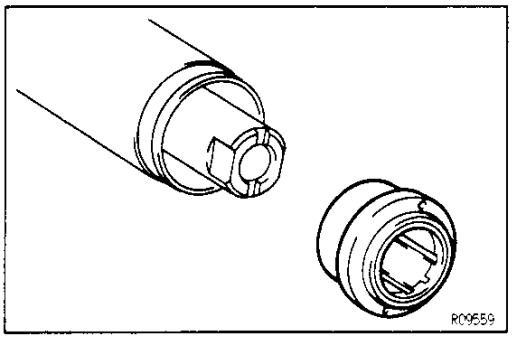

5. INSTALL CYLINDER END STOPPER

(a) Install the stopper into the rack housing.

Downloaded from www.Manualslib.com manuals search engine

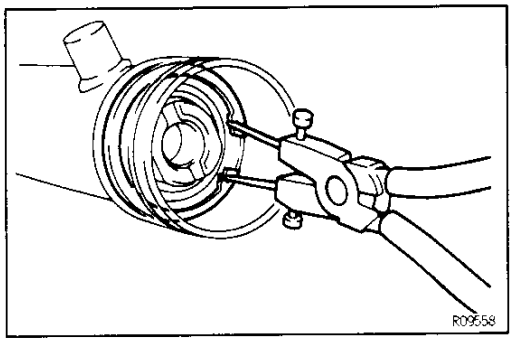

(b) Using snap ring pliers, install a new snap ring.

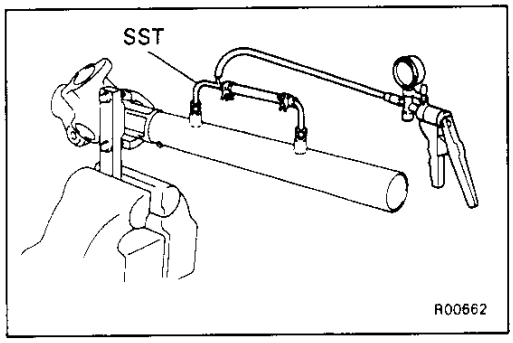

6. AIR TIGHTNESS TEST

(a) Install SST to the unions of the rack housing.
SST 09631–12071

(b) Apply 53.3 kPa (400 mmHg, 15.75 in.Hg) of vacuum for about 30 seconds.

(c) Check that there is no change in the vacuum.
If there is change in the vacuum, check the installation of the rack housing oil seals.

SR

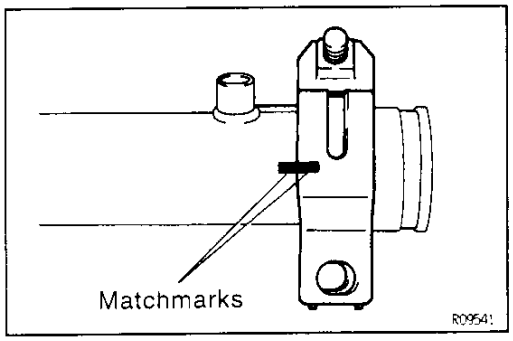

7. INSTALL RACK HOUSING NO.2 GROMMET

Install the grommet to the rack housing No.2 bracket.

8. INSTALL RACK HOUSING NO.2 BRACKET

(a) Align the matchmarks on the bracket and rack housing.

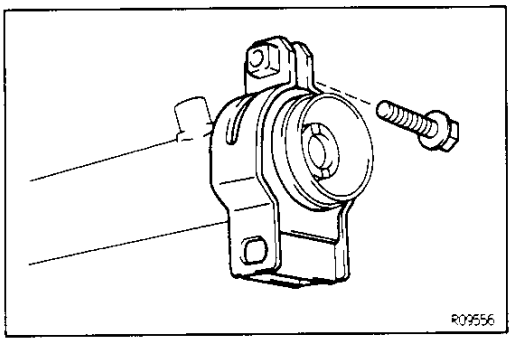

(b) Torque the bolt.
Torque: 39 N·m (400 kgf·cm, 29 ft·lbf)

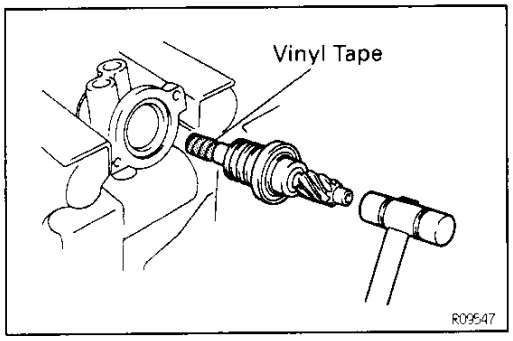

9. INSTALL CONTROL VALVE ASSEMBLY

(a) To prevent oil seal lip damage, wind vinyl tape on the serrated part of the valve shaft.

(b) Coat the teflon rings with power steering fluid.

(c) Secure the control valve housing in a vise.
NOTICE: Do not tighten the vise too tight.

(d) Using a plastic hammer, tap in the valve assembly into the valve housing.
NOTICE: Be careful not to damage the teflon rings and oil seal.

Downloaded from www.Manualslib.com manuals search engine

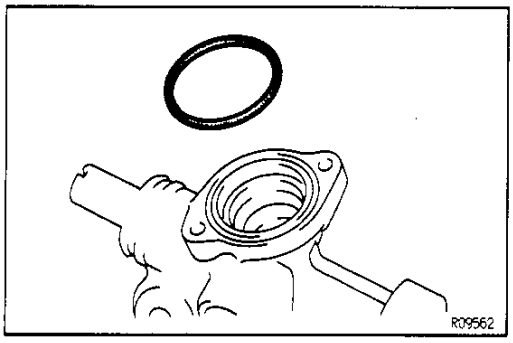

10. INSTALL CONTROL VALVE HOUSING WITH CONTROL VALVE ASSEMBLY

(a) Coat a new O–ring with power steering fluid.

(b) Install the O–ring to the rack housing.

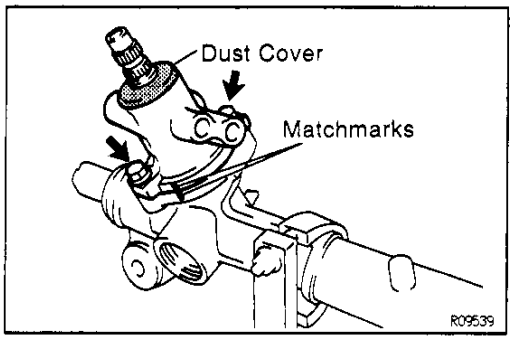

(c) Align the matchmarks on the valve housing and rack housing.

(d) Torque the 2 bolts.
Torque: 31 N·m (315 kgf·cm, 23 ft·lbf)

(e) Install the dust cover.

SR

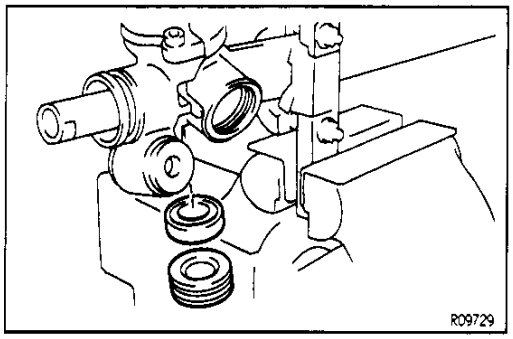

11. INSTALL BEARING

12. INSTALL RACK HOUSING CAP

(a) Apply sealant to 2 or 3 threads of the cap.
Sealant:
Part No.08833–00080, THREE BOND 1344, LOCTITE 242 or equivalent

(b) Temporarily install the cap.

(c) Use SST to measure the rotational torque of the control valve shaft, and make a note of the torque value.
SST 09616–00010

(d) Using a hexagon wrench (24 mm), torque the cap.
Torque: 15 N·m (150 kgf·cm, 11 ft·lbf)

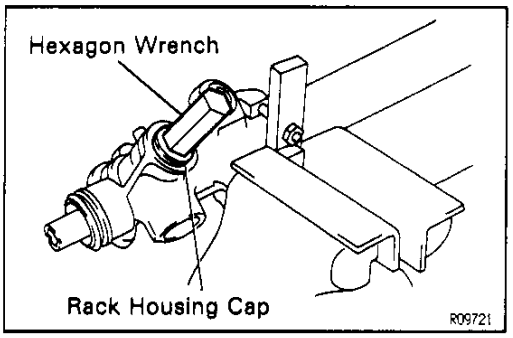

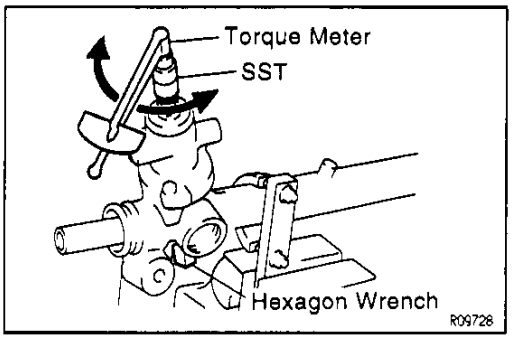

(e) Using SST, a torque meter and hexagon wrench (24 mm), loosen the cap until the preload is within specification.
SST 09616–00010
Preload (turning):
Torque value from (c) above + 0.1 – 0.2 N·m (1 – 2 kgf·cm, 0.9 – 1.7 in.·lbf)

Downloaded from www.Manualslib.com manuals search engine

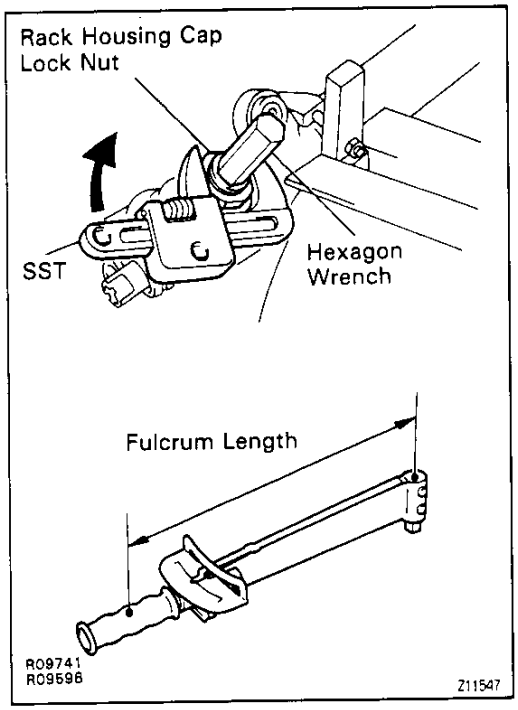

13. INSTALL RACK HOUSING CAP LOCK NUT

(a) Apply sealant to 2 or 3 threads of the nut.
Sealant:
Part No.08833–00080, THREE BOND 1344, LOCTITE 242 or equivalent

(b) Using a hexagon wrench (24 mm) to stop the rack housing cap rotating, and using SST, torque the nut.
SST 09922–10010
Torque: 50 N·m (511 kgf·cm, 37 ft·lbf)
NOTICE: Use SST 09922–10010 in the direction shown in the illustration.
HINT: Use a torque wrench with a fulcrum length of 340 mm (13.39 in.).

SR

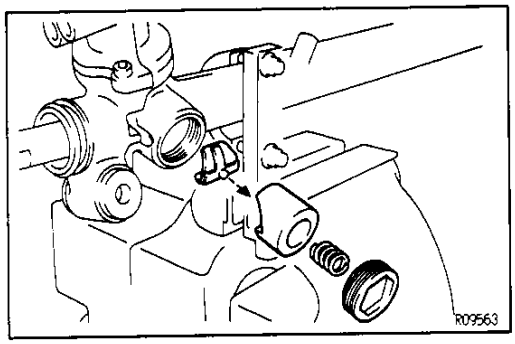

14. INSTALL RACK GUIDE SEAT, RACK GUIDE, RACK GUIDE SPRING AND RACK GUIDE SPRING CAP

(a) Install the seat to the guide.

(b) Apply sealant to 2 or 3 threads of the cap.
Sealant:
Part No.08833–00080, THREE BOND 1344, LOCTITE 242 or equivalent

(c) Temporarily install the cap.

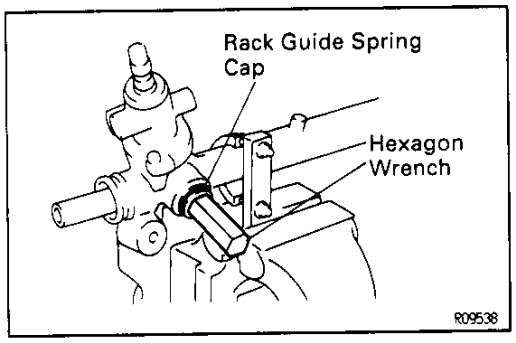

15. ADJUST TOTAL PRELOAD

(a) Using a hexagon wrench (24 mm), torque the rack guide spring cap.
Torque: 25 N·m (250 kgf·cm, 18 ft·lbf)

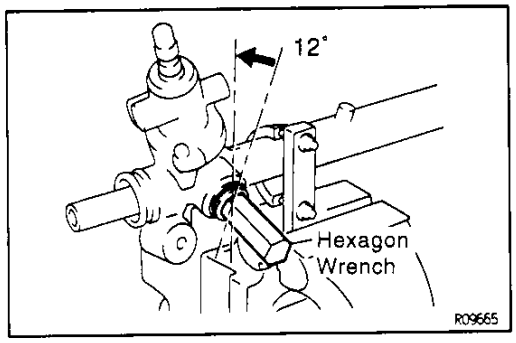

(b) Using a hexagon wrench (24 mm), return the cap 12°.

Downloaded from www.Manualslib.com manuals search engine

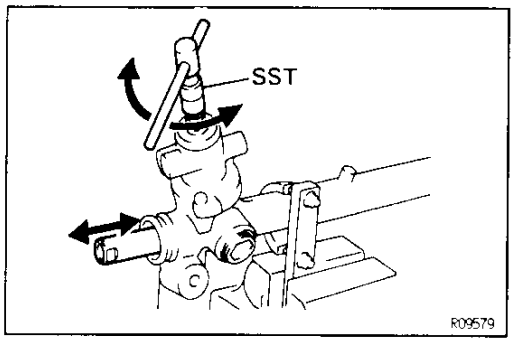

(c) Using SST, turn the control valve shaft right and left 1 or 2 times.
SST 09616–00010

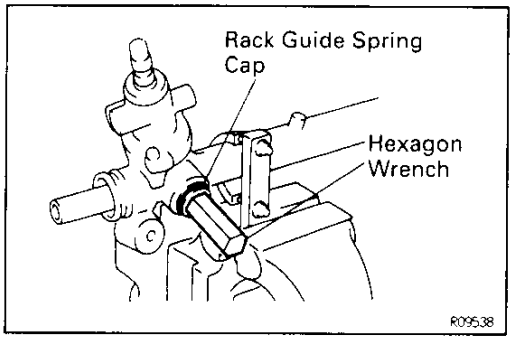

(d) Using a hexagon wrench (24 mm), loosen the cap until the rack guide spring is not functioning.

SR

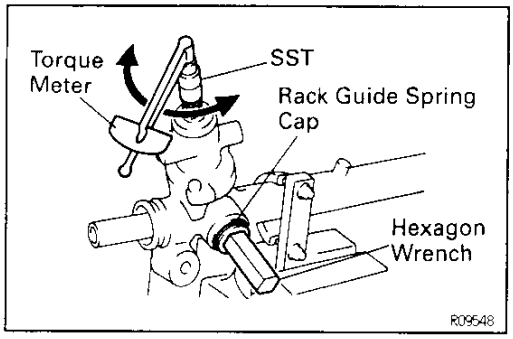

(e) Using SST, a torque meter and hexagon wrench (24 mm), tighten the cap until the preload is within specification.
SST 09616–00010
Preload (turning):
1.2–1.5 N·m (12–15 kgf·cm, 10.4–13.0 in.·lbf)

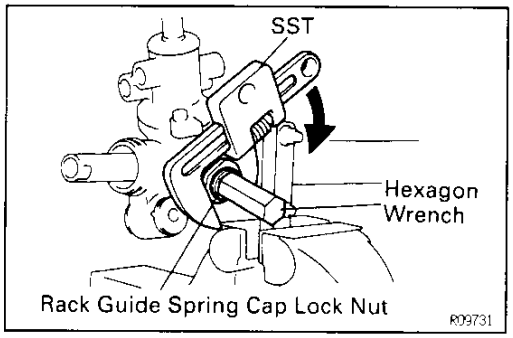

16. INSTALL RACK GUIDE SPRING CAP LOCK NUT

(a) Apply sealant to 2 or 3 threads of the nut.
Sealant:
Part No.08833–00080, THREE BOND 1344, LOCTITE 242 or equivalent

(b) Using a hexagon wrench (24 mm) to stop the rack guide spring cap rotating, and using SST, torque the nut.
SST 09922–10010
Torque: 50 N·m (511 kgf·cm, 37 ft·lbf)
NOTICE: Use SST 09922–10010 in the direction shown in the illustration.
HINT: Use a torque wrench with a fulcrum length of 340 mm (13.39 in.).

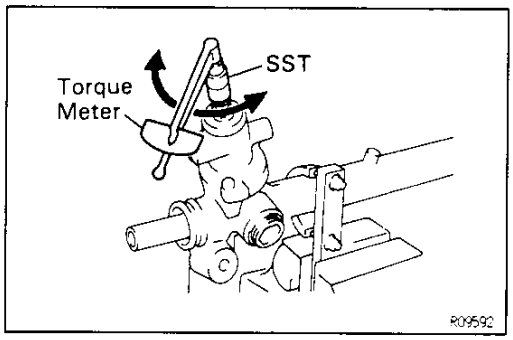

(c) Using SST and a torque meter, recheck the total preload.
SST 09616–00010
Preload (turning):
1.2–1.5 N·m (12–15 kgf·cm, 10.4–13.0 in.·lbf)

Downloaded from www.Manualslib.com manuals search engine

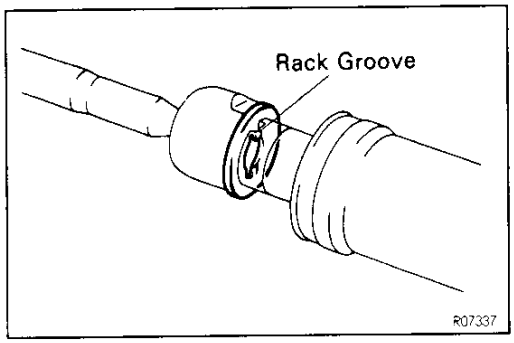

17. INSTALL CLAW WASHERS AND RACK ENDS

(a) Install a new washer, and temporarily install the rack end.
HINT: Align the claws of the washer with the steering rack grooves.

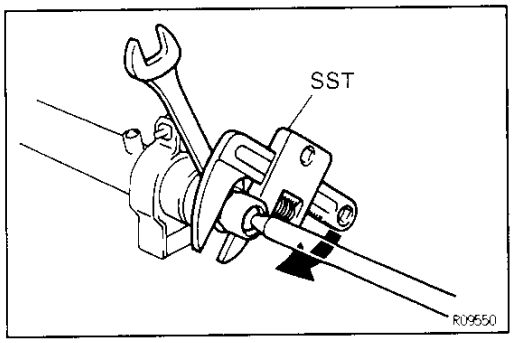

(b) Using a spanner (22 mm) to hold the steering rack steady, and using SST, torque the rack end.
SST 09922–10010
Torque: 60 N·m (612 kgf·cm, 44 ft·lbf)
NOTICE: Use SST 09922–10010 in the direction shown in the illustration.
HINT: Use a torque wrench with a fulcrum length of 340 mm (13.39 in.).

SR

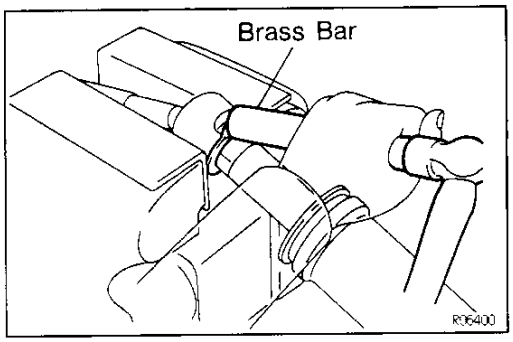

(c) Secure the rack end in a vise.
NOTICE: Do not tighten the vise too tight.

(d) Using a brass bar and hammer, stake the washer.
NOTICE: Avoid any impact to the rack.

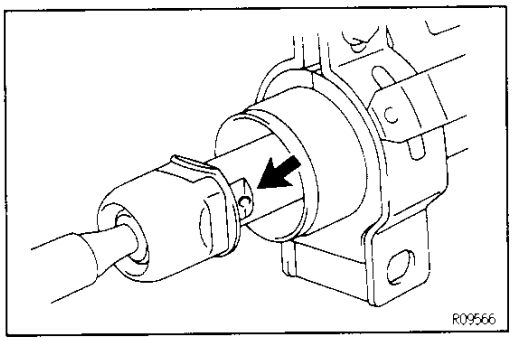

18. INSTALL RACK BOOTS, CLAMPS AND CLIPS

(a) Ensure that the steering rack hole is not clogged with grease.
HINT: If the hole is clogged, the pressure inside the boot will change after it is assembled and the steering wheel turned.

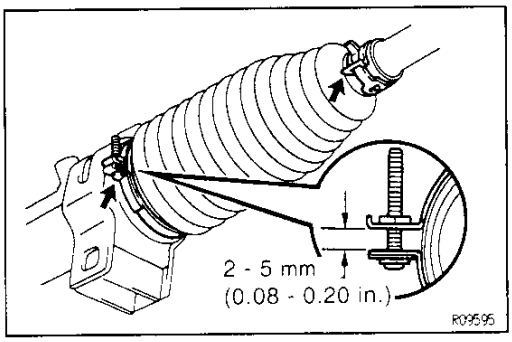

(b) Install the boot.
NOTICE: Be careful not to damage or twist the boot.

(c) Tighten the clamp, as shown in the illustration.

Downloaded from www.Manualslib.com manuals search engine

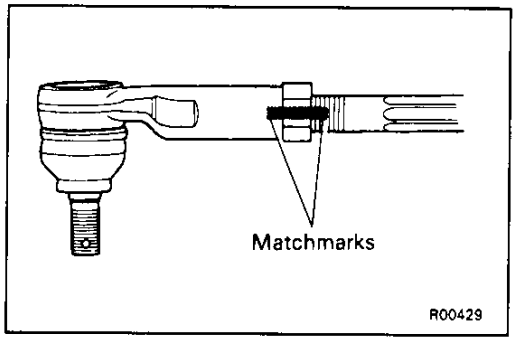

19. INSTALL TIE ROD ENDS AND LOCK NUTS

(a) Screw the lock nut and tie rod end onto the rack end until the matchmarks are aligned.

(b) Adjust the dimensions.
(See page SR–77)

(c) Torque the nut.
Torque: 56 N·m (570 kgf·cm, 41 ft·lbf)

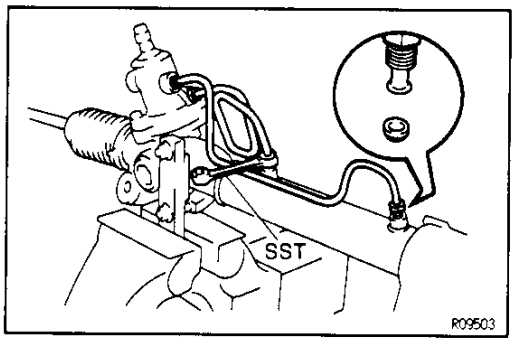

20. INSTALL 2 TURN PRESSURE TUBES

(a) Install 2 new union seats to the rack housing.

(b) Using SST, install the tube.
SST 09633–00020
Torque: 19 N·m (195 kgf·cm, 14 ft·lbf)
HINT: Use a torque wrench with a fulcrum length of 250 mm (9.84 in.).

SR

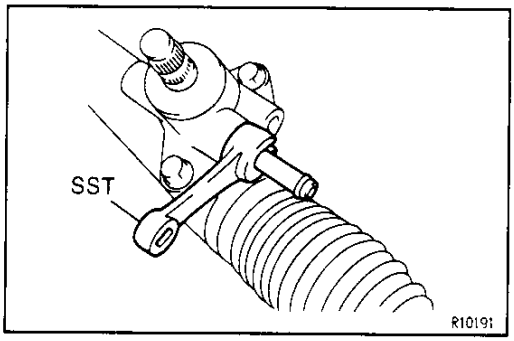

21. INSTALL RETURN TUBE NO.1 SUB–ASSEMBLY RHD:

Using SST, install the tube.
SST 09631–22020
Torque: 36 N·m (365 kgf·cm, 26 ft·lbf)
HINT: Use a torque wrench with a fulcrum length of 250 mm (9.84 in.).

Downloaded from www.Manualslib.com manuals search engine

SERVICE SPECIFICATIONS

SERVICE DATA

BROQP-07

ON—VEHICLE INSPECTION		
Steering wheel freeplay	Maximum	30 mm (1.18 in.)
STEERING COLUMN		
Tilt pawl stopper	— Mark	
	1 or A	12.68 — 12.74 mm (0.4992 — 0.5016 in.)
	2 or B	12.61 — 12.67 mm (0.4965 — 0.4988 in.)
	3 or C	12.54 — 12.60 mm (0.4937 — 0.4961 in.)
	4 or D	12.47 — 12.53 mm (0.4909 — 0.4933 in.)
	5 or E	12.40 — 12.46 mm (0.4882 — 0.4906 in.)
	6 or F	12.33 — 12.39 mm (0.4854 — 0.4878 in.)
	7 or G	12.26 — 12.32 mm (0.4827 — 0.4850 in.)
PS ON—VEHICLE INSPECTION		
7A—FE :		
Drive belt tension at 98 N (10 kgf, 22 lbf)	New belt	5 — 6 mm (0.20 — 0.24 in.)
Drive belt tension at 98 N (10 kgf, 22 lbf)	Used belt	6 — 8 mm (0.24 — 0.31 in.)
*Drive belt tension	New belt	441 — 539 N (45 — 55 kgf, 99 — 121 lbf)
*Drive belt tension	Used belt	196 — 343 N (20 — 35 kgf, 44 — 77 lbf)
Oil level rise	Maximum	Below 5 mm (0.20 in.)
Oil pressure at idle speed with valve closed	Minimum	6,865 kPa (70 kgf/cm², 996 psi)
Steering effort at idle speed	Maximum	6.9 N·m (70 kgf·cm, 61 in.·lbf)
3S—GE, 3S—FE, 5S—FE :		
Drive belt tension at 98 N (10 kgf, 22 lbf)	New belt	8 — 10 mm (0.31 — 0.39 in.)
Drive belt tension at 98 N (10 kgf, 22 lbf)	Used belt	10 — 13 mm (0.39 — 0.51 in.)
*Drive belt tension	New belt	441 — 539 N (45 — 55 kgf, 99 — 121 lbf)
*Drive belt tension	Used belt	196 — 343 N (20 — 35 kgf, 44 — 77 lbf)
Oil level rise	Maximum	Below 5 mm (0.20 in.)
Oil pressure at idle speed with valve closed	Minimum	8,826 kPa (90 kgf/cm², 1,280 psi)
Steering effort at idle speed	Maximum	6.9 N·m (70 kgf·cm, 61 in.·lbf)
PS VANE PUMP		
7A—FE, 3S—GE, 3S—FE, 5S—FE :		
Pump shaft / front housing bushing oil clearance	STD	0.01 — 0.03 mm (0.0004 — 0.0012 in.)
Pump shaft / front housing bushing oil clearance	Maximum	0.07 mm (0.0028 in.)
Vane plate height	Minimum	8.1 mm (0.319 in.)
Vane plate thickness	Minimum	1.797 mm (0.0707 in.)
Vane plate length	Minimum	14.988 mm (0.59008 in.)
Vane plate / pump rotor groove clearance	Maximum	0.03 mm (0.0012 in.)
Vane length	— Pump rotor and cam ring mark	
	NONE	14.996 — 14.998 mm (0.59039 — 0.59047 in.)
	1	14.994 — 14.996 mm (0.59031 — 0.59039 in.)
	2	14.992 — 14.994 mm (0.59024 — 0.59031 in.)
	3	14.990 — 14.992 mm (0.59016 — 0.59024 in.)
	4	14.988 — 14.990 mm (0.59008 — 0.59016 in.)
Spring free length	Minimum	36 mm (1.42 in.)
Vane pump rotating torque	Maximum	0.3 N·m (2.8 kgf·cm, 2.4 in.·lbf) or less

* : For use with belt tension gauge

SR

Downloaded from www.Manualslib.com manuals search engine

SR08R-01

SERVICE DATA

PS GEAR HOUSING		
Steering rack runout	Maximum	0.15 mm (0.006 in.)
Total preload		1.2 – 1.5 N·m (12 – 15 kgf·cm, 10.4 – 13.0 in.·lbf)

SR0GO-04

TORQUE SPECIFICATIONS

Part tightened		N·m	kgf·cm	ft·lbf
STEERING COLUMN				
Steering wheel set nut		34	350	25
w/ SRS Airbag :				
Sensor lock release bolt		8.8	90	78 in.·lbf
Steering wheel pad set screw (Torx screw)		8.8	90	78 in.·lbf
Steering column assembly set nut		25	260	19
Intermediate shaft x Intermediate No.2 shaft		35	360	26
Intermediate shaft x Main shaft		35	360	26
Column protector set bolt		4.9	50	43 in.·lbf
Tilt steering column :				
Compression spring set screw		7.8	80	69 in.·lbf
Turn signal bracket set bolt		5.4	55	47 in.·lbf
Tilt lever retainer set nut		15	150	11
Tilt pawl set bolt x nut		5.9	60	52 in.·lbf
Tilt lever assembly set bolt		2.9	30	26 in.·lbf
PS VANE PUMP				
7A–FE :				
Union bolt		52	525	38
Drive belt adjusting bolt		39	400	29
PS vane pump assembly set bolt		39	400	29
Bracket set bolt	12 mm Bolt	19	195	14
	14 mm Bolt	39	400	29
Vane pump pulley set nut		43	440	32
Air control valve		36	370	27
Bracket x Oil reservoir x Front housing	12 mm Bolt	13	130	9
	14 mm Bolt	41	420	30
Pressure port union		69	700	51
3S–GE, 3S–FE, 5S–FE :				
Pressure feed tube x Control valve housing		44 (36)	450 (365)	32 (26)
Drive belt adjusting bolt		43	440	32
PS vane pump assembly set bolt		43	440	32
Bracket set bolt		43	440	32
Union bolt x pressure feed tube		52	525	38
Vane pump pulley set nut		43	440	32
Air control valve		36	370	27
Union bolt x Pressure feed No.2 tube		69	700	51
Suction port union set bolt		13	130	9
Pressure port union		69	700	51

( ): For use with SST

SR

Downloaded from www.Manualslib.com manuals search engine

TORQUE SPECIFICATIONS

Part tightened	N·m	kgf·cm	ft·lbf
PS GEAR HOUSING			
Tie rod end x Steering knuckle	49	500	36
Control valve shaft x Intermediate No.2 shaft	35	360	26
Pressure feed and return tubes x Control valve housing	44 (36)	450 (365)	32 (26)
Tube clamp set bolt	13	130	9
PS gear housing assembly set bolt x nut	127	1,300	94
RHD :			
Return tube No.1 sub—assembly	44 (36)	450 (365)	32 (26)
Turn pressure tube	25 (19)	250 (195)	18 (14)
Tie rod end lock nut	56	570	41
Rack end	83 (60)	850 (612)	61 (44)
Rack guide spring cap lock nut	69 (50)	700 (511)	50 (37)
Rack housing cap lock nut	69 (50)	700 (511)	50 (37)
Control valve housing set bolt	31	315	23
Rack housing No.2 bracket set bolt	39	400	29

( ): For use with SST

SR

Downloaded from www.Manualslib.com manuals search engine

Downloaded from www.Manualslib.com manuals search engine

SUPPLEMENTAL RESTRAINT SYSTEM

GENERAL DESCRIPTION ..... RS– 2
PREPARATION ..... RS– 4
STEERING WHEEL PAD ..... RS– 5
STEERING WHEEL PAD DISPOSAL ..... RS– 8
SERVICE SPECIFICATIONS ..... RS– 12

Downloaded from www.Manualslib.com manuals search engine

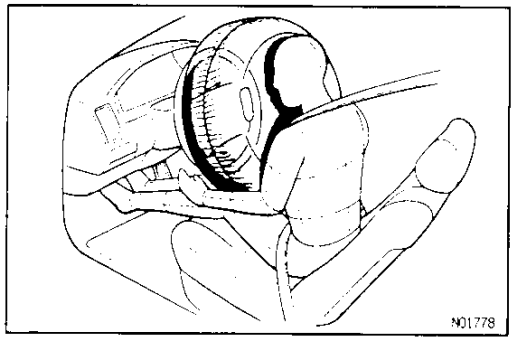

GENERAL DESCRIPTION

A8002-05

The CELICA is equipped with as SRS (Supplemental Restraint System) airbag as an option.
The SRS together with the seat belt, is designed to help protect the driver. In a collision, the airbag sensor detects the shock, and if the front–to–rear shock is greater than a specified value, an SRS stored in the steering wheel pad is inflated instantaneously to help reduce the shock to the driver.

LOCATION OF COMPONENTS

RS

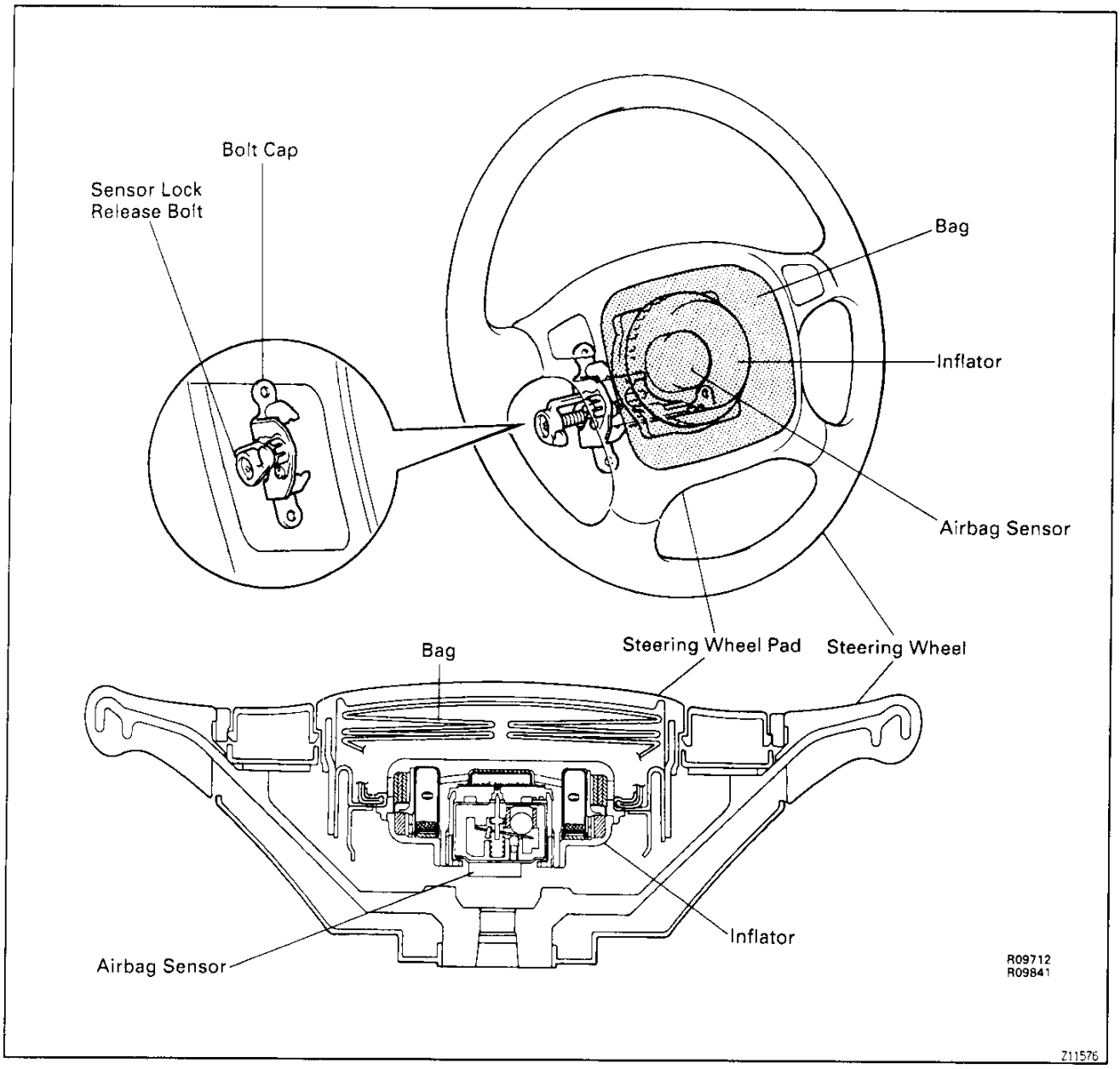

Downloaded from www.Manualslib.com manuals search engine

A9003-04

CONSTRUCTION

The supplemental restraint system consists of the airbag sensor, inflator and bag which are all installed in the steering wheel pad.
This supplemental restraint system is a mechanical activation type. The deceleration of the vehicle impact during a collision is detected by the floating ball inside the airbag sensor, which pushes down on the trigger shaft. This triggers the firing pin linked to the trigger shaft and ignites the squib of the inflator.

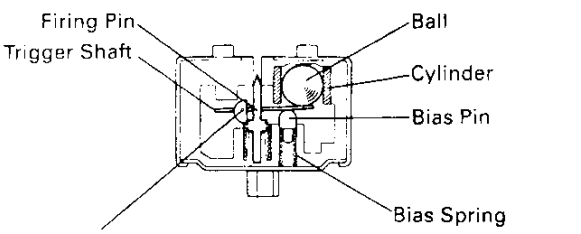

Trigger Shaft is engaged with firing pin and firing pin is stopped.

R09842

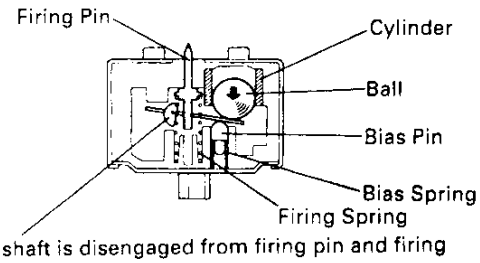

Trigger shaft is disengaged from firing pin and firing pin is ejected.

R09843

V05127

The steering wheel and the steering wheel pad are removed and installed in such a way that the sensor located at the left side of the steering wheel must be loosened first. This automatically activates the safety device.

RS

HANDLING PRECAUTIONS

Failure to carry out service operations in the correct sequence could cause the supplemental restraint system to unexpectedly deploy during servicing, possibly leading to a serious accident. Further, if a mistake is made in servicing the supplemental restraint system, it is possible the SRS may fail to operate when required. Before performing servicing (including removal or installation of parts, inspection or replacement), be sure to read the following items carefully, then follow the correct procedure described in the repair manual.

1. **Never disassemble the steering wheel pad assembly.**
2. **Do not subject the steering wheel pad to shocks or bring magnets close to it.**
3. **Do not expose the steering wheel pad to high temperatures or fire.**
4. **If grease, cleaner, oil or water gets on the steering wheel pad,promptly wipe it off with a dry cloth.**
5. **Do not drop the steering wheel pad. Never use a steering wheel pad which has been dropped.**
6. **Never install the steering wheel and pad in another vehicle.**
7. **When the steering wheel pad is removed, store it on a stable, flat place with the pad surface facing upwards. Never place anything on top of the pad.**
8. **When work on the vehicle will produce too strong a shock, first loosen the sensor lock release bolt until it turns freely and perform the work after sensor lock occurs.**
9. **Even in cases where the vehicle is in a low–impact accident where the SRS is not activated, always check the pad surface and airbag sensor part. If dents, cracks or deformation is visible, replace the SRS with a new assembly.**
10. **When disposing of the vehicle or steering wheel, always deploy the SRS first.**
11. **The deployed inflator inside the steering wheel pad is hot, so dispose of it after it has been cooled by atmospheric air. Never apply water to cool it down.**

Downloaded from www.Manualslib.com manuals search engine

PREPARATION

RECOMMENDED TOOL

AB004-03

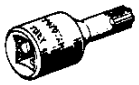	09042-00010 Torx Socket T30	Steering wheel pad

EQUIPMENT

AB005-03

Torque wrench	Steering wheel pad
Bolt: Length: 35 mm (1.38 in.) Pitch: 1.0 mm (0.039 in.) Diam.: 6.0 mm (0.236 in.)	Airbag disposal
Rope (no projections, difficult to break)	Airbag disposal
Tire Width: 185 mm (7.28 in.) Inner diam.: 360mm (14.17 in.)	Airbag disposal
Tire with disc wheel Width: 185 mm (7.28 in.) Inner diam.: 360 mm (14.17 in.)	Airbag disposal
Wire or string	Airbag disposal
Vinyl bag	Airbag disposal

RS

Downloaded from www.Manualslib.com manuals search engine

STEERING WHEEL PAD

COMPONENTS

A8006-02

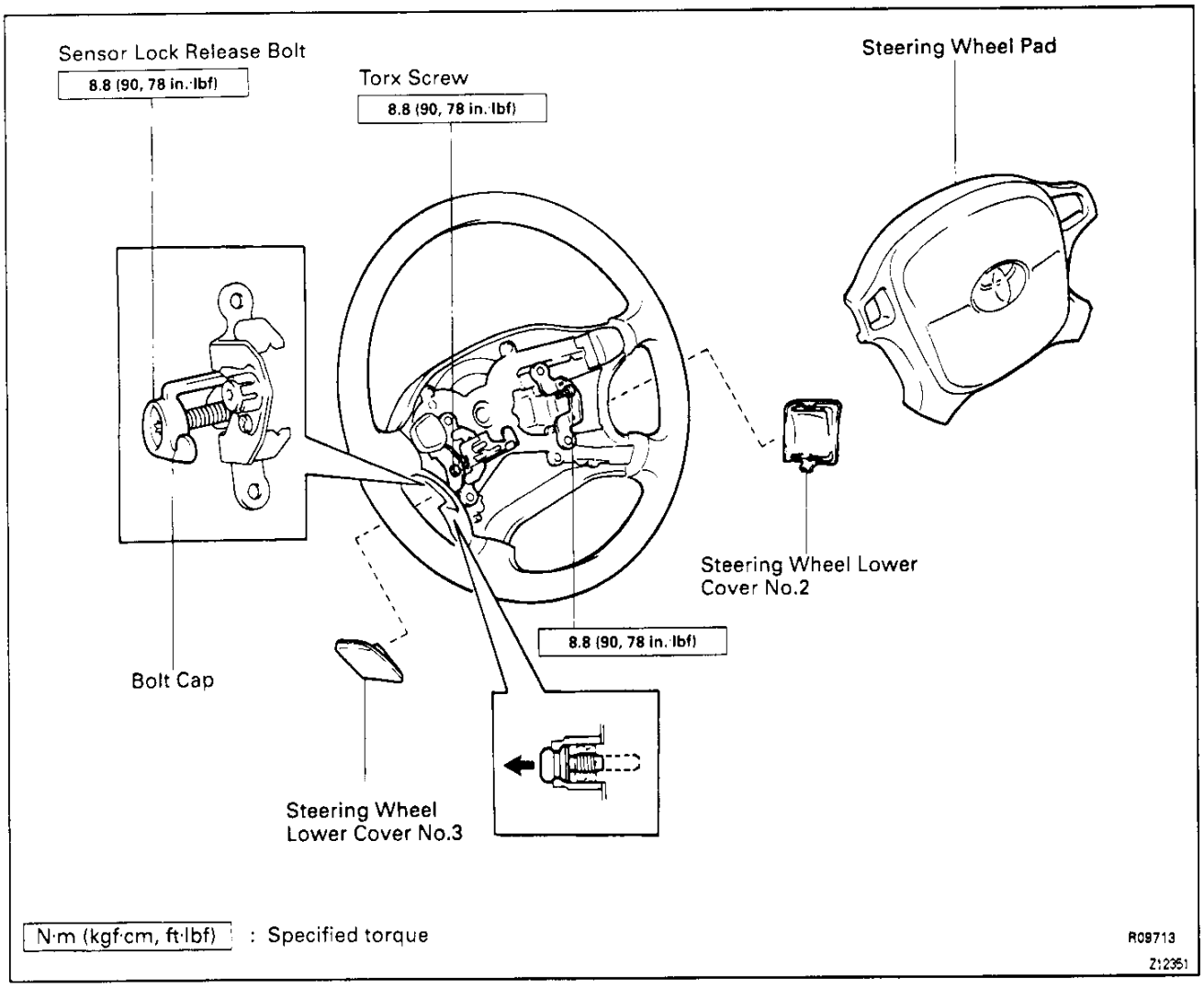

A8007-02

STEERING WHEEL PAD REMOVAL

CAUTION: When the steering wheel pad removed, always place it on a stable flat place with the pad surface facing upwards. Never place anything on top of the pad.

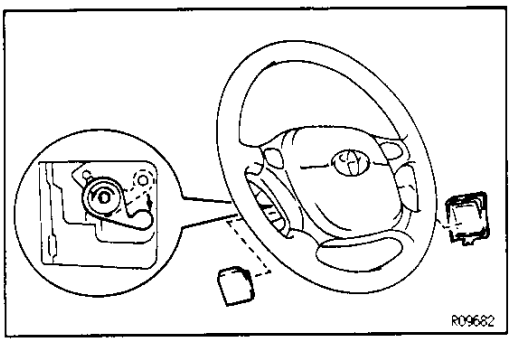

REMOVE STEERING WHEEL PAD

(a) Using a screwdriver, remove the steering wheel lower cover No.2 and No.3.
HINT: Tape the screwdriver tip before use.

(b) Using a torx socket wrench, loosen the sensor lock release bolt until it turns freely.

(c) Slide the bolt cap downwards.

Downloaded from www.Manualslib.com manuals search engine

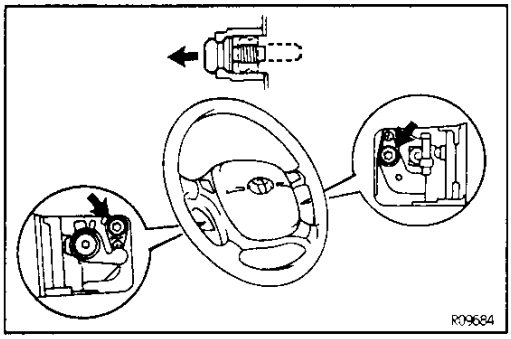

(d) Using a torx socket wrench, remove 2 torx screws.
(e) Pull the steering wheel pad out from the steering wheel.

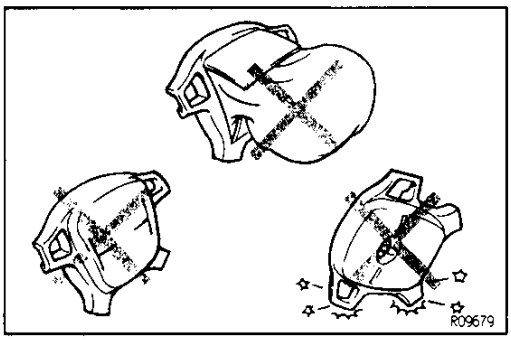

STEERING WHEEL PAD INSPECTION

A8008-02

INSPECT EXTERIOR OF STEERING WHEEL PAD

CAUTION: Never disassemble the steering wheel pad.

Replace the steering wheel pad with a new one if:

(a) The SRS has deployed.
(b) The pad surface, airbag sensor or inflator has dents, cracks or deformation.
(c) The SRS has been dropped.

RS

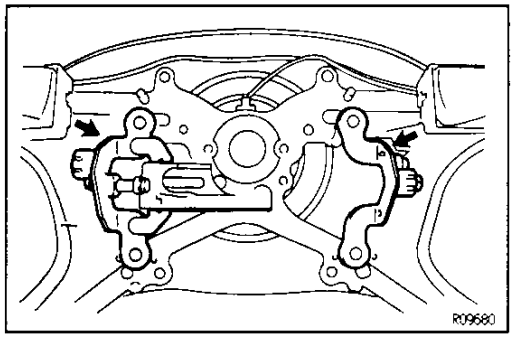

STEERING WHEEL INSPECTION

R8082-01

INSPECT EXTERIOR OF STEERING WHEEL

Replace the steering wheel with a new one if:

(a) The steering wheel metal bracket is deformed.
(b) The new steering wheel pad cannot be installed without forcing it.

Downloaded from www.Manualslib.com manuals search engine

STEERING WHEEL PAD INSTALLATION

A800A-04

(See page RS–5)

NOTICE:

- **If the pad assembly has been dropped or damaged, replace it with a new one.**
- **Never install a pad which has been used in another vehicle. When replacing a pad, always install a new pad.**

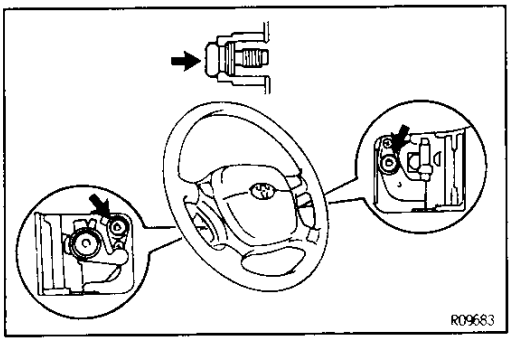

INSTALL STEERING WHEEL PAD

(a) Check that the sensor lock release bolt is loosened so that it turns without resistance.

(b) Set the steering wheel pad in the steering wheel and use a torx socket wrench to install the 2 torx screws.

Torque: 8.8 N·m (90 kgf·cm, 78 in.·lbf)

NOTICE: Do not pinch the horn button or wire harness for the cruise control system.

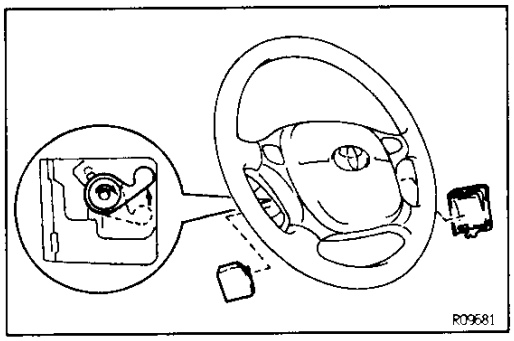

(c) Cover the steering wheel set bolt with the bolt cap, then tighten the sensor lock release bolt.
Torque: 8.8 N·m (90 kgf·cm, 78 in.·lbf)

(d) Install 2 steering wheel lower covers.
HINT: Confirm that the lower covers are properly installed.

RS

Downloaded from www.Manualslib.com manuals search engine

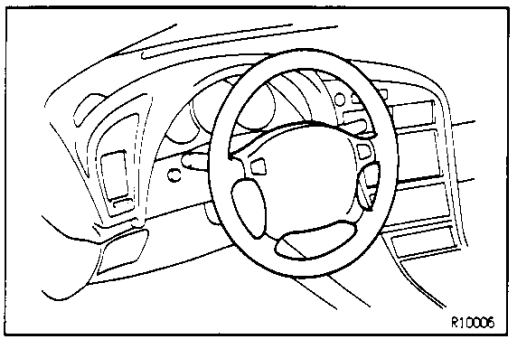

STEERING WHEEL PAD DISPOSAL

A8008-03

When scrapping a vehicle equipped with an supplemental restraint system or disposing of a steering wheel pad (with airbag), always first remove the steering wheel pad from the vehicle and deploy the SRS in accordance with the procedure described below.
If any abnormality occurs with the SRS deployment, contact the SERVICE DEPT. of the DISTRIBUTOR.
Never dispose of a vehicle or steering wheel pad which has an undeployed SRS.

PRECAUTIONS FOR AIRBAG DISPOSAL

A8009C-02

1. **Deploy the SRS in a safe place outdoors, on a flat concretearea.**
2. **If the steering wheel pad is going to be stored, always place the pad facing upwards.**
3. **After the sensor lock is released, handle the steering wheel pad with great care.**
4. **Always stand at least 5 m (16 ft) away from the SRS when deploying it.**
5. **The inflator inside the steering wheel pad becomes very hot when the SRS is deployed, so allow it to cool for 30 minutes after the SRS is deployed. Never apply water to the inflator or deployed SRS.**
6. **When handling the deployed SRS, wear safety glasses and gloves.**
7. **Put the deployed SRS in a vinyl bag, seal the bag tightly and dispose of it as industrial waste.**
8. **Always wash your hands with water after completing disposal of the SRS.**

RS

Downloaded from www.Manualslib.com manuals search engine

RS068-01

STEERING WHEEL PAD DISPOSAL

CAUTION:

- **Always deploy the SRS in a safe place outdoors, on a flat concrete area.**
- **If the steering wheel pad is stored for even a short while, always keep the pad surface facing upwards.**
- **After the sensor lock is released, handle the steering wheel pad with great care.**

1. REMOVE STEERING WHEEL PAD
(See pages RS–5 to 6)

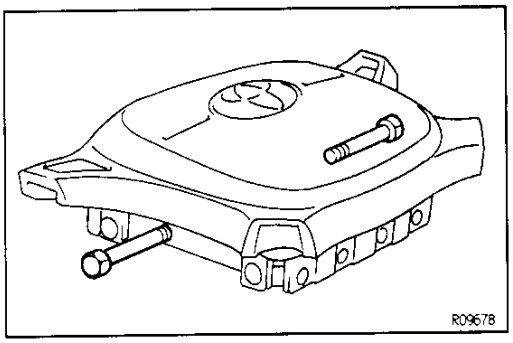

2. PREPARE FOR AIRBAG DEPLOYMENT

(a) Install 2 bolts approx. 10 mm (0.39 in.) into the holes in the steering wheel pad.

Bolt dimensions:

Length 35 mm (1.38 in.)
Pitch 1.0 mm (0.038 in.)
Diam. 6.0 mm (0.236 in.)

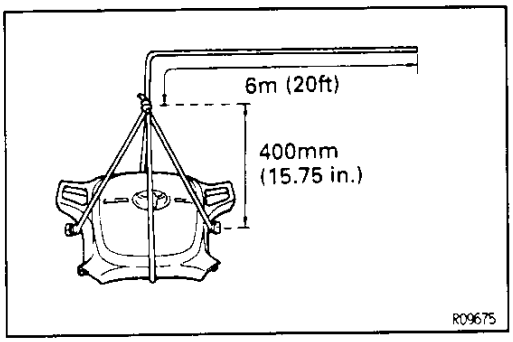

(b) Attach ropes to the steering wheel pad so that it is suspended lever, as shown in the illustration.

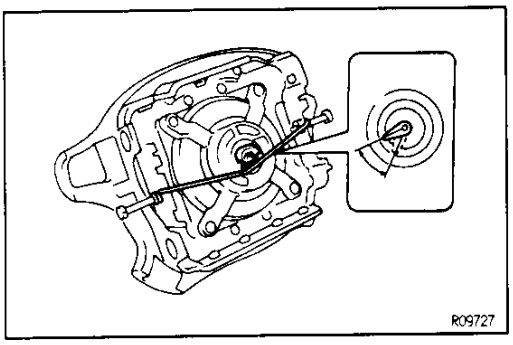

(c) Using a wire or string, unlock the sensor lock.

CAUTION: After sensor lock is released the SRS will deploy if dropped from a height of 50 mm (1.97 in.), resulting in highly dangerous jumping up of the pad. Handle the pad extremely carefully to avoid any shocks to it.

Downloaded from www.Manualslib.com manuals search engine

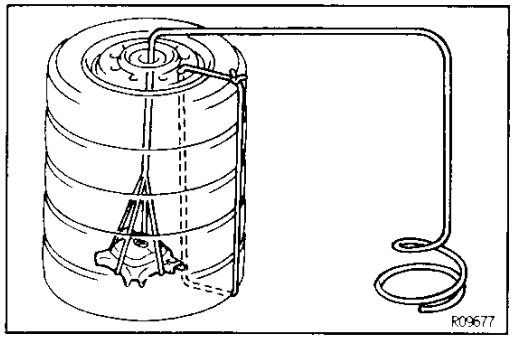

(d) As shown in the illustration, enclose the steering wheel pad within 4 tires and tire with disc wheel, passing the rope through the wheel hole.

Tire size: Must exceed the following dimensions

Width 185 mm (7.28 in.)

Inner diam. 360 mm (14.17 in.)

CAUTION:

- **Do not use tires with disc wheels.**
- **Do not subject the steering wheel pad to any shocks at all.**
- **Tie the tires together so that they do not move.**

NOTICE: The tires may be marked by the airbag deployment, so use redundant tires.

RS

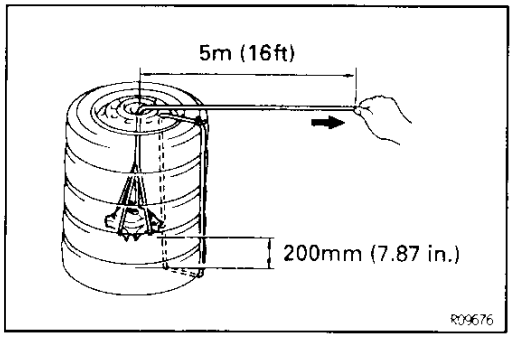

3. AIRBAG DEPLOYMENT

(a) Stand 5 m (16 ft) away from the steering wheel pad and pull the pad up 200 mm (7.87 in.).

CAUTION: Before pulling the pad up, check again that the surrounding area is safe.

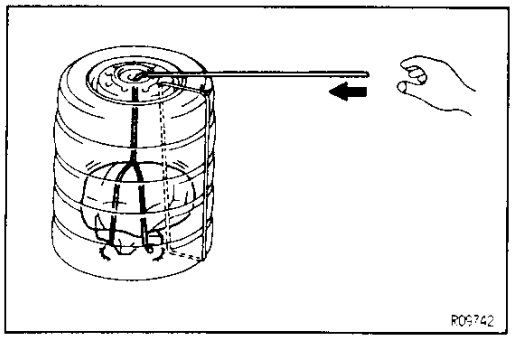

(b) Release the rope to drop the steering wheel pad and deploy the SRS.

CAUTION: Before deployment, warn everyone nearby in a loud voice.

HINT: The SRS may not deploy if the sensor lock was not fully released or the pad was not horizontal when suspended. If this occurs, avoid applying in shock to the pad and perform the procedure from the start again.

Downloaded from www.Manualslib.com manuals search engine

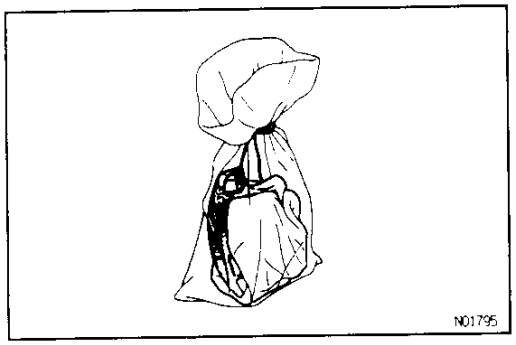

4. AIRBAG DISPOSAL

CAUTION:

- **The steering wheel pad is very hot when the SRS is deployed, so leave it alone for at least 30 minutes after deployment.**
- **Use gloves and safety, glasses when handling a steering wheel pad with deployed airbag.**
- **Do not apply water, etc. to a steering wheel pad with deployed airbag.**
- **Always wash your hands with water after completing the operation.**

Put the deployed SRS in a vinyl bag, seal the bag tightly and dispose of it as industrial waste.

Downloaded from www.Manualslib.com manuals search engine

SERVICE SPECIFICATIONS

TORQUE SPECIFICATIONS

A800E-03

Part tightened	N·m	kgf·cm	ft·lbf
Steering wheel	35	360	26
Steering wheel pad	8.8	90	78 in.·lbf
Sensor lock release bolt	8.8	90	78 in.·lbf

RS

Downloaded from www.Manualslib.com manuals search engine

BODY ELECTRICAL SYSTEM

GENERAL INFORMATION ..... BE– 2
PRECAUTION ..... BE– 9
PREPARATION ..... BE– 10
POWER SOURCE ..... BE– 12
IGNITION SWITCH ..... BE– 18
HEADLIGHT AND
TAILLIGHT SYSTEM ..... BE– 19
FRONT FOG LIGHT SYSTEM ..... BE– 31
REAR FOG LIGHT SYSTEM ..... BE– 34
TURN SIGNAL AND HAZARD
WARNING SYSTEM ..... BE– 36
BACK–UP LIGHT SYSTEM ..... BE– 40
STOP LIGHT SYSTEM ..... BE– 42
HEADLIGHT CLEANER SYSTEM ..... BE– 44
WIPER AND WASHER SYSTEM ..... BE– 47
COMBINATION METER ..... BE– 55
DEFOGGER SYSTEM ..... BE– 73
POWER WINDOW
CONTROL SYSTEM ..... BE– 77
POWER DOOR LOCK
CONTROL SYSTEM ..... BE– 84
SLIDING ROOF SYSTEM ..... BE– 90
POWER MIRROR
CONTROL SYSTEM ..... BE– 96
SEAT HEATER SYSTEM ..... BE– 99
CRUISE CONTROL SYSTEM BE–102
AUDIO SYSTEM BE–123
CLOCK BE–145
SERVICE SPECIFICATIONS BE–147

Downloaded from www.Manualslib.com manuals search engine

Example:

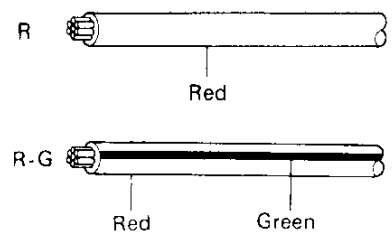

BE1359

GENERAL INFORMATION

WIRING COLOR CODE

BE0B8-04

Wire colors are indicated by an alphabetical code.

B	=Black	L	=Blue	R	=Red
BR	=Brown	LG	=Light Green	V	=Violet
G	=Green	O	=Orange	W	=White
GR	=Gray	P	=Pink	Y	=Yellow

The first letter indicates the basic wire color and the second letter indicates the color of the stripe.

Example:

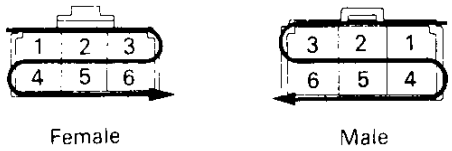

BE0832

CONNECTOR

BE0B9-05

1. **PIN NUMBER OF FEMALE CONNECTOR**
   Numbered in order from upper left to lower right.
2. **PIN NUMBER OF MALE CONNECTOR**
   Numbered in order from upper right to lower left.

BE

Example:
e.g.A7=No. 7 pin of connector "A"

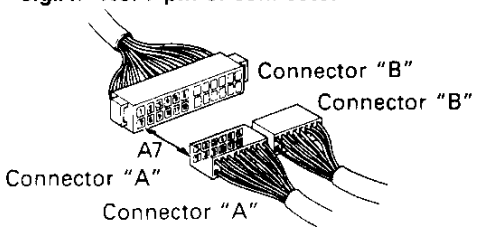

BE4130

HINT: When connectors with different or the same number of terminals are used with the same parts, each connector name (letter of the alphabet) and pin number is specified.

Example:

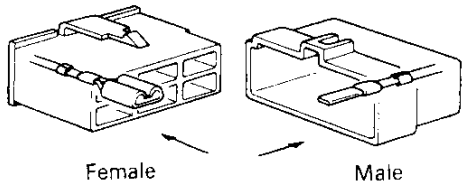

BE0833

3. **DISTINCTION OF MALE AND FEMALE CONNECTORS**
   Male and female connectors are distinguished by the shape of their internal pins.

(a) All connectors are shown from the open end, and the lock is on top.

(b) To pull apart the connectors, pull on the connector itself, not the wires.
HINT: Check to see what kind of connector you are disconnecting before pulling apart.

Example:

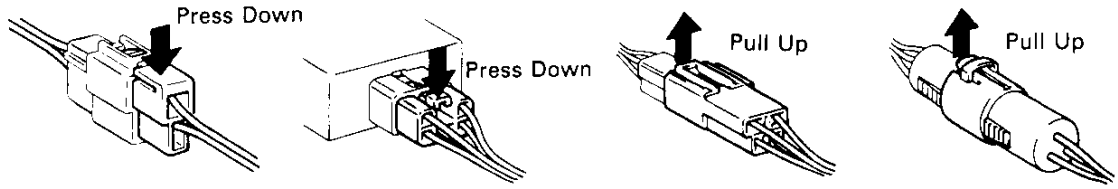

BE3782 BE3783

Z05794

Downloaded from www.Manualslib.com manuals search engine

BE0BA-07

HOW TO REPLACE TERMINAL

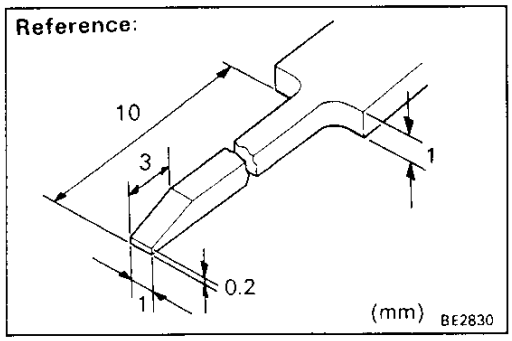

(with terminal retainer or secondary locking device)

1. **PREPARE THE SPECIAL TOOL**

   HINT: To remove the terminal from the connector, please construct a special tool or use an object similar to that shown on the left.

2. **DISCONNECT CONNECTOR**

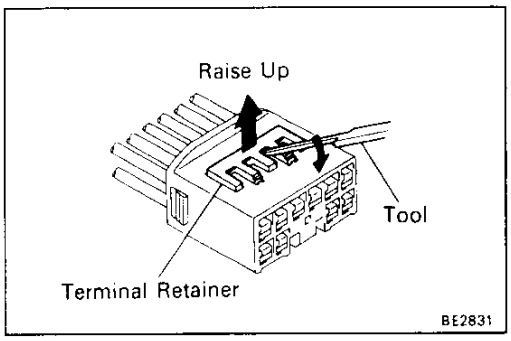

3. **DISENGAGE THE SECONDARY LOCKING DEVICE OR TERMINAL RETAINER**

(a) Locking device must be disengaged before the terminal locking clip can be released and the terminal removed from the connector.

(b) Use a special tool or the terminal pick to unlock the secondary locking device or terminal retainer.

NOTICE: Do not remove the terminal retainer from connector body.

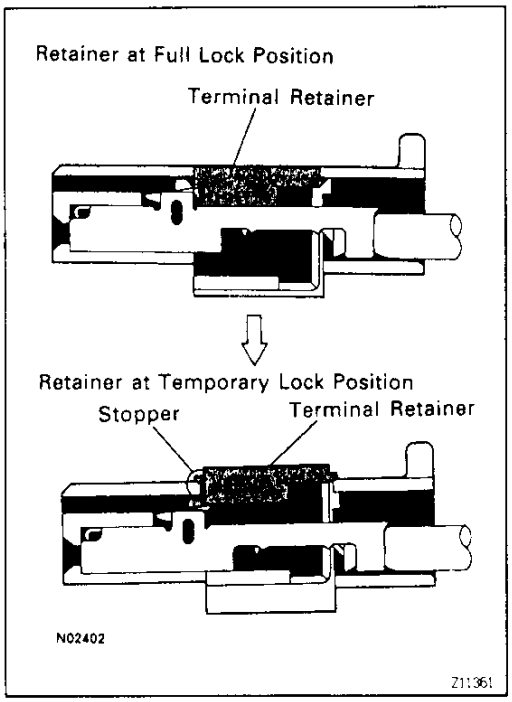

Ⓐ For Non—Waterproof Type Connector

HINT: The needle insertion position varies according to the connector's shape (number of terminals etc.), so check the position before inserting it.

"Case 1"

Raise the terminal retainer up to the temporary lock position.

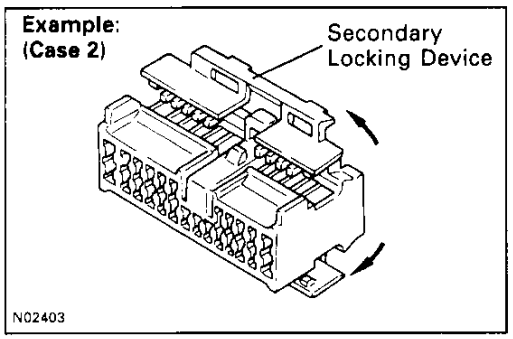

"Case 2"

Open the secondary locking device.

BE

Downloaded from www.Manualslib.com manuals search engine

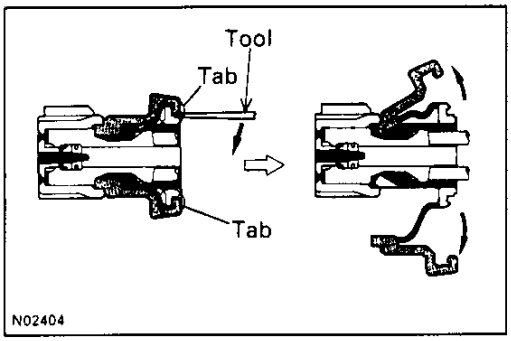

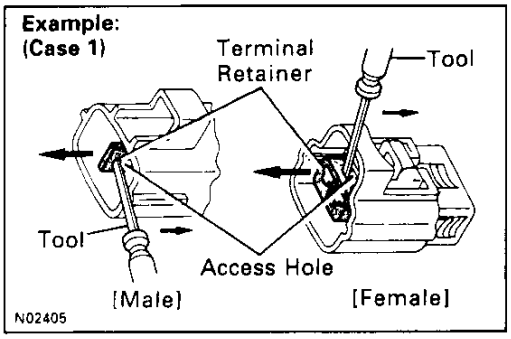

Ⓑ For Waterproof Type Connector
HINT: Terminal retainer color is different according to connector body.
Example:
Terminal Retainer: Connector Body
Black or White: Gray
Black or White: Dark Gray
Gray or White: Black

BE

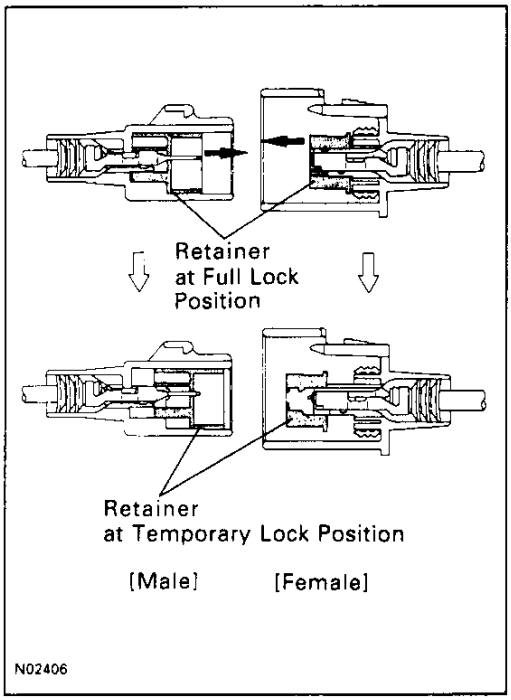

"Case 1"
Type where terminal retainer is pulled up to the temporary lock position (Pull Type).
Insert the special tool into the terminal retainer access hole and pull the terminal retainer up to the temporary lock position.
HINT: The needle insertion position varies according to the connector's shape (Number of terminals etc.), so check the position before inserting it.

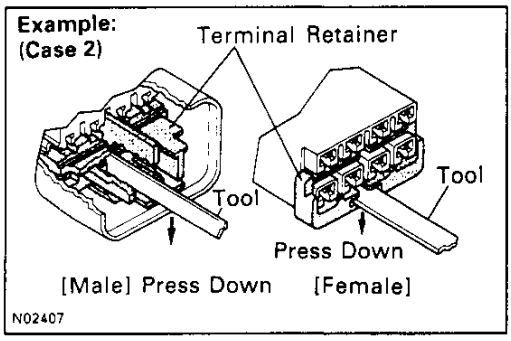

"Case 2"
Type which cannot be pulled as far as Power Lock.

Downloaded from www.Manualslib.com manuals search engine

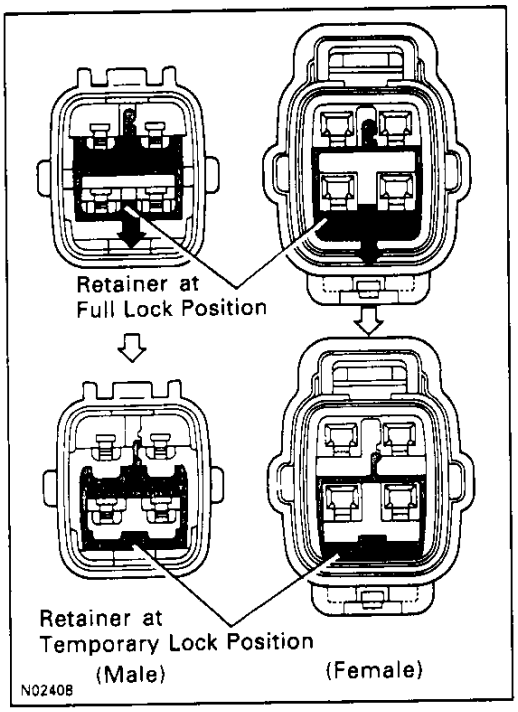

Insert the tool straight into the access hole of terminal retainer, as shown.
Push the terminal retainer down to the temporary lock position.

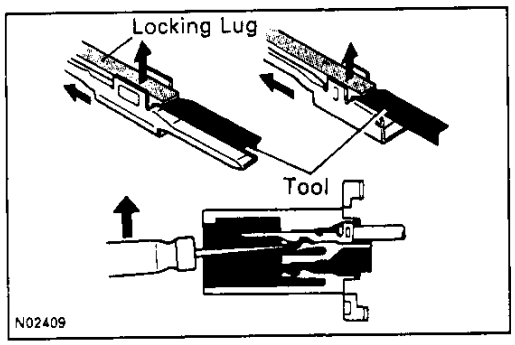

(c) Release the locking lug from terminal and pull the terminal out from the rear.

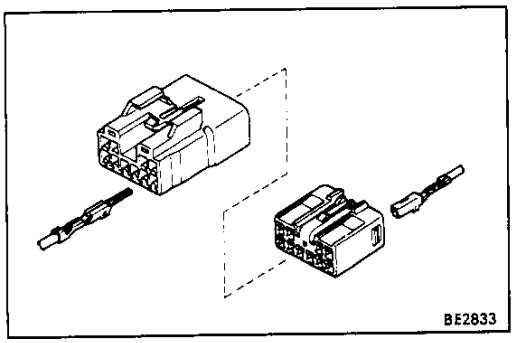

4. INSTALL TERMINAL TO CONNECTOR

(a) Insert the terminal.

HINT:

1. Make sure the terminal is positioned correctly.
2. Insert the terminal until the locking lug locks firmly.
3. Insert the terminal with terminal retainer in the temporary lock position.

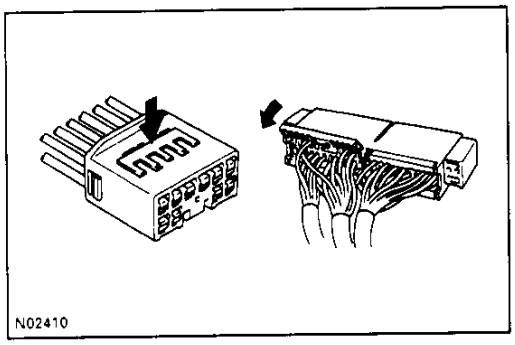

(b) Push the secondary locking device or terminal retainer in to the full lock position.

5. CONNECT CONNECTOR

Downloaded from www.Manualslib.com manuals search engine

BE0BB-05

FUSE REPLACEMENT

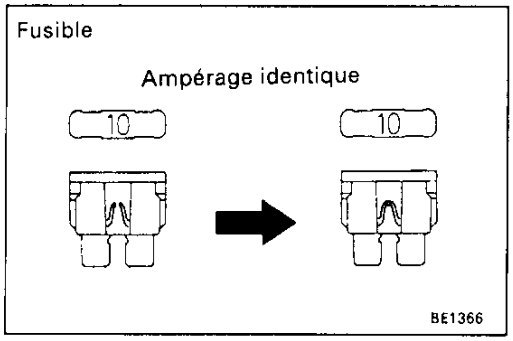

HINT: If replacing the fuse be sure to replace it with a fuse with an equal amperage rating.

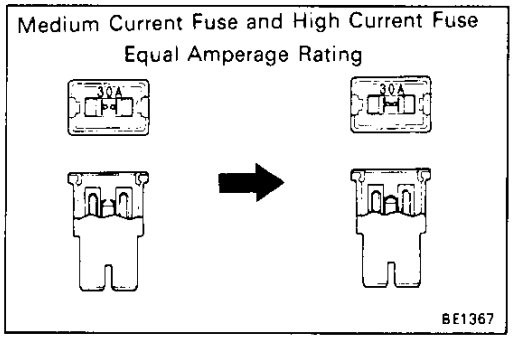

BE

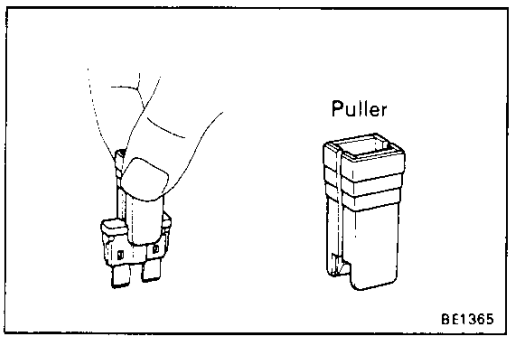

NOTICE:

- **Turn off all electrical components and the ignition switch before replacing a fuse or fusible link. Do not exceed the fuse or fusible link amperage rating.**
- **Always use a fuse puller for removing and inserting a fuse. Remove and insert straight in and out without twisting. Twisting could force open the terminals too much, resulting in a bad connection.**

If a fuse or fusible link continues to blow, a short circuit is indicated. The system must be checked by a qualified technician.

HINT: The puller is located at Relay Block No.2.

Downloaded from www.Manualslib.com manuals search engine

BE0BC-03

VOLTAGE CHECK

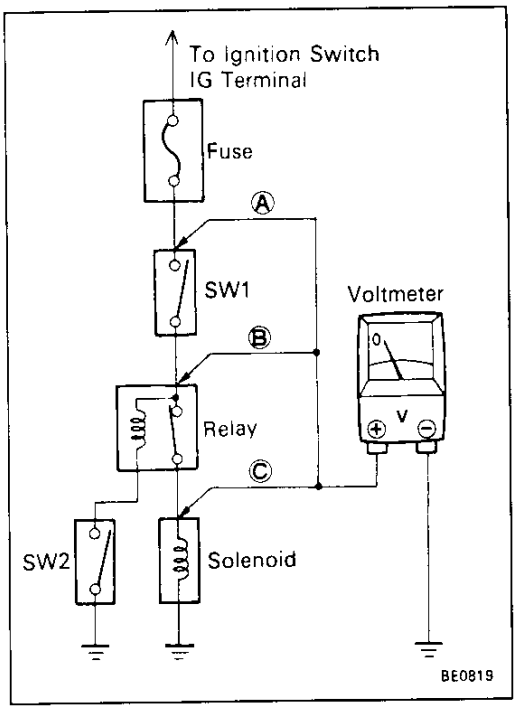

(a) Establish conditions in which voltage is present at the check point.
Example:
Ⓐ—Ignition SW ON
Ⓑ—Ignition SW and SW 1 on
Ⓒ—Ignition SW, SW 1 and Relay on (SW 2 off)

(b) Using a voltmeter, connect the negative (−) lead to a good ground point or negative (−) battery terminal and the positive (+) lead to the connector or component terminal. This check can be done with a test bulb instead of a voltmeter.

BE0BD-08

CONTINUITY AND RESISTANCE CHECK

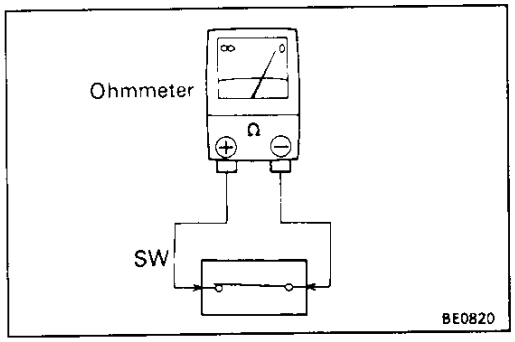

(a) Disconnect the battery terminal or wire so there is no voltage between the check points.

(b) Contact the 2 leads of an ohmmeter to each of the check points.

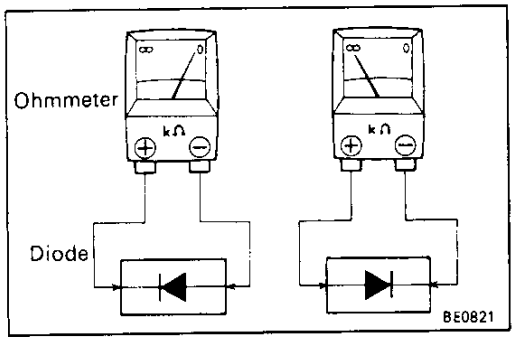

If the circuit has diodes, reverse the 2 leads and check again.
When contacting the negative (−) lead to the diode positive (+) side and the positive (+) lead to the negative (−) side, there should be continuity. When contacting the 2 leads in reverse, there should be no continuity.
HINT: Specifications may vary depending on the type of tester, so refer to the tester's instruction manual before performing the inspection.

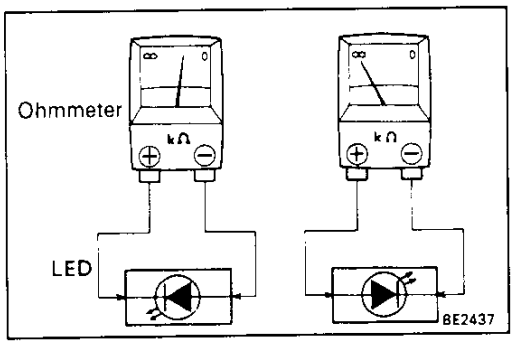

Check LED (Light Emitting Diode) in the same manner as that for diodes.
HINT:
- Use a tester with a power source of 3 V or greater to overcome the circuit resistance.
- If a suitable tester is not available, apply battery positive voltage and check that the LED lights up.

Downloaded from www.Manualslib.com manuals search engine

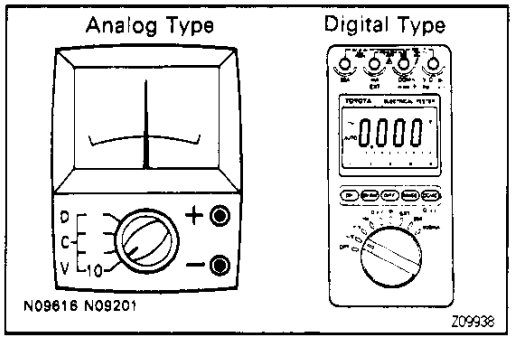

(c) Use a volt/ohmmeter with high impedance (10 kΩ/V minimum) for troubleshooting the electrical circuit.

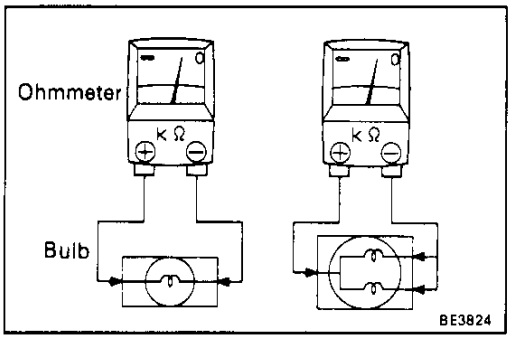

BULB CHECKING

BE0BE-03

(a) Remove the bulb.
(b) There should be continuity between the respective terminals of the bulb together with a certain amount of resistance.
(c) Apply the 2 leads of the ohmmeter to each of the terminals.
(d) Apply battery positive voltage and check that the bulb lights up.

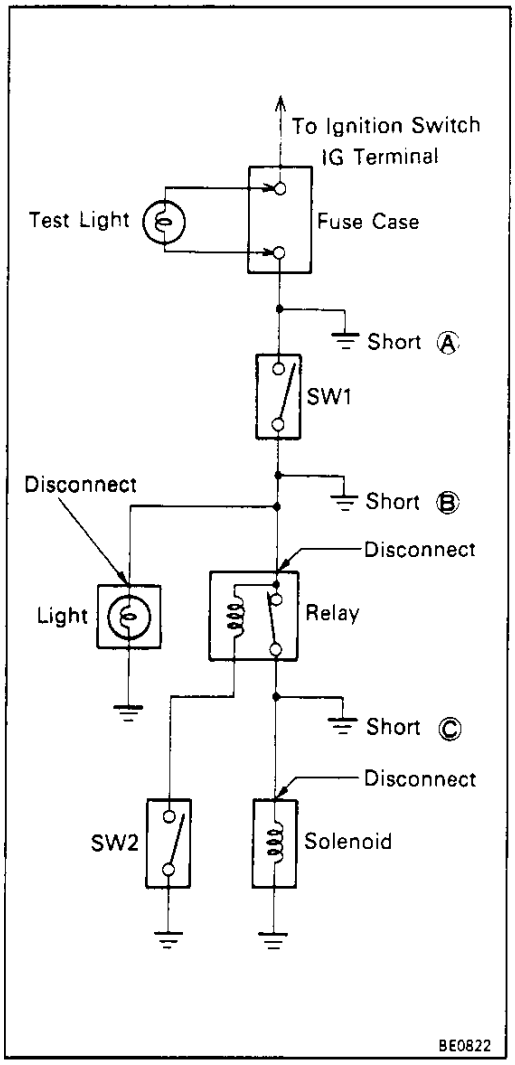

SHORT CIRCUIT CHECK

BE0BF-03

(a) Remove the blown fuse and eliminate all loads from the fuse.
(b) Connect a test bulb in place of the fuse.
(c) Establish conditions in which the test bulb comes on. Example:
Ⓐ—Ignition SW ON
Ⓑ—Ignition SW and SW 1 on
Ⓒ—Ignition SW, SW 1 and Relay on (Connect the Relay) and SW 2 off (or Disconnect SW 2)
(d) Disconnect and reconnect the connectors while watching the test bulb. The short lies between the connector where the test bulb stays lit and the connector where the bulb goes out.
(e) Find the exact location of the short by lightly shaking the problem wire along the body.

Downloaded from www.Manualslib.com manuals search engine

PRECAUTION

BE1CL-08

Take care to observe the following precautions when performing inspections or removal and replacement of body electrical related parts.

HEADLIGHT SYSTEM

- Halogen bulbs have pressurized gas inside and require special handling. They can burst if scratched or dropped. Hold a bulb only by its plastic or metal case.
  Don't touch the glass part of a bulb with bare hands.

BE1CM-09

SRS (SUPPLEMENTAL RESTRAINT SYSTEM)

Failure to carry out service operations in the correct sequence could cause the airbag system to unexpectedly deploy during servicing, possibly leading to a serious accident.
Further, if a mistake is made in servicing the airbag system, it is possible the airbag may fail to operate when required. Before performing servicing (including removal or installation of parts, inspection or replacement), be sure to read the following items carefully, then follow the correct procedure described in the repair manual.

- Never disassemble the steering wheel pad assembly.
- Do not subject the steering wheel pad to shocks or bring magnets close to it.
- Do not expose the steering wheel pad to high temperatures or fire.
- If grease, cleaner, oil or water gets on the steering wheel pad, promptly wipe it off with a dry cloth.
- Do not drop the steering wheel pad. Never use a steering wheel pad which has been dropped.
- Never install the steering wheel and pad in another vehicle.
- When the steering wheel pad is removed, store it on a stable, flat place with the pad surface facing upwards. Never place anything on top of the pad.
- When work on the vehicle will produce too strong a shock, first loosen the sensor lock release bolt until it turns freely and perform the work after sensor lock occurs.
- Even in cases where the vehicle is in a low–impact accident where the airbag is not activated, always check the pad surface and airbag sensor part. If dents, cracks or deformation is visible, replace the airbag with a new assembly.
- When disposing of the vehicle or steering wheel, always deploy the airbag first.
- The deployed inflator inside the steering wheel pad is hot, so dispose of it after it has been cooled by atmospheric air. Never apply water to cool it down.

BE1CN-04

AUDIO SYSTEM

- If the negative (–) terminal cable is disconnected from the battery, the preset AM, FM 1 and FM 2 stations stored in memory are erased, so be sure to note the stations and reset them after the battery terminal is reconnected.

BE1CP-04

MOBILE COMMUNICATION SYSTEM

- If the vehicle is equipped with a mobile communication system, refer to precautions in the IN section.

Downloaded from www.Manualslib.com manuals search engine

PREPARATION

SST (SPECIAL SERVICE TOOLS)

BE03G-08

	09843-18020	Diagnosis Check Wire	
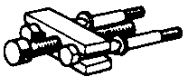	09609-20011	Steering Wheel Puller	For removing steering wheel

RECOMMENDED TOOLS

BE03H-00

	09082-00015	TOYOTA Electrical Tester	
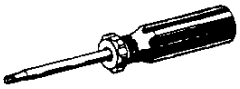	09041-00030	Torx Driver T30	For removing and installing steering wheel pad
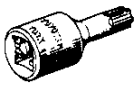	09042-00010	Torx Socket T30	For removing and installing steering wheel pad

BE

EQUIPMENT

BE03J-09

Voltmeter	
Ammeter	
Ohmmeter	
Test lead	
Syphon	Brake fluid level warning switch
Bulb (3.4 W)	Fuel sender gauge, Seat belt warning relay
Bulb (21 W)	Turn signal flasher relay
Dry cell battery	Fuel sender gauge
Torque wrench	
Masking tape	Rear window defogger wire
Tin foil	Rear window defogger wire

Downloaded from www.Manualslib.com manuals search engine

BE10M-06

SSM (SPECIAL SERVICE MATERIAL)

	DuPont Paste No. 4817 or equivalent	Rear window defogger

Downloaded from www.Manualslib.com manuals search engine

POWER SOURCE
PARTS LOCATION

BE221-01

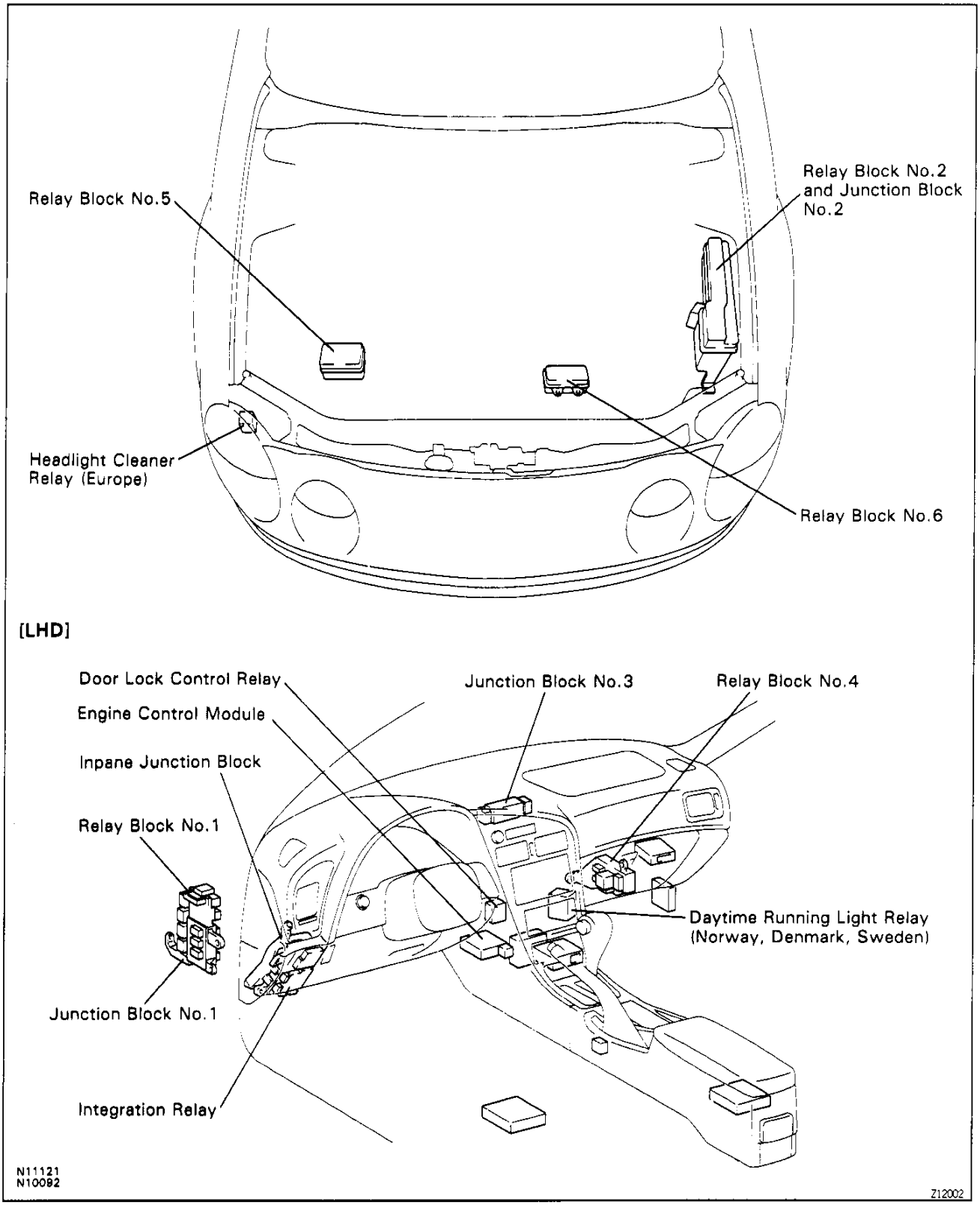

Downloaded from www.Manualslib.com manuals search engine

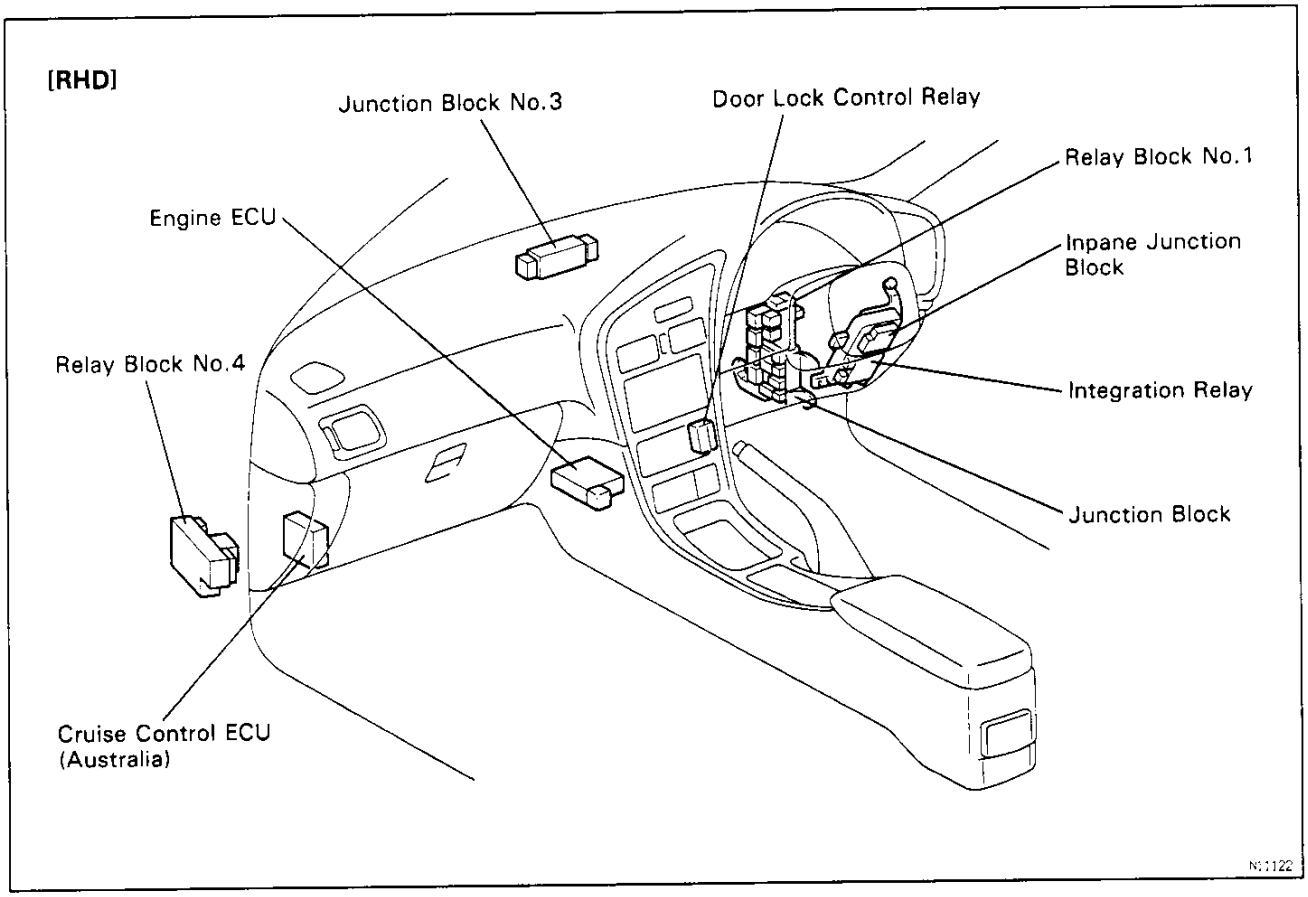

Downloaded from www.Manualslib.com manuals search engine

Inpane Junction Block

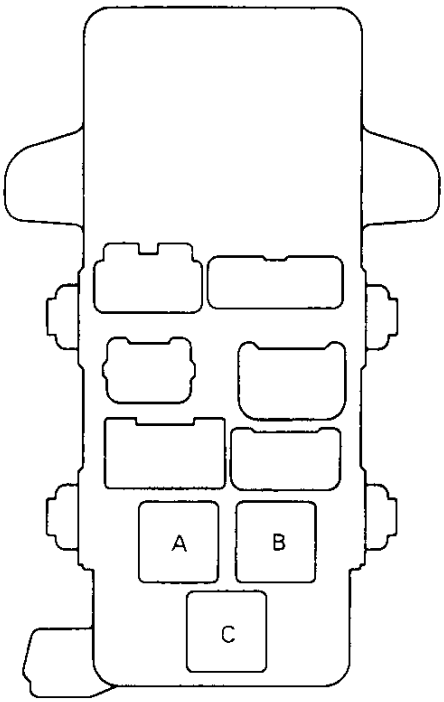

RELAY
A. Tailight Relay
B. Power Main Relay
C. Defogger Relay

FUSE
Medium Current Fuses

a.	AM1	40A
b.	DOOR	30A
c.	DEF	30A
d.	POWER	30A

Fuses

1.	PANEL (Ex. Germany)	7.5A
	TAIL-RH (Germany)	10A
2.	IGN	7.5A
3.	TAIL (Ex. Germany)	15A
	TAIL-LH (Germany)	10A
4.	STOP	15A
5.	WIPER	20A
6.	HTR	10A
7.	ECU-IG	15A
8.	FOG	20A
9.	MIR-HTR	10A
10.	GAUGE	10A
11.	SEAT-HTR	20A
12.	CIG&RAD	15A
13.	TURN	10A
14.	ST	7.5A

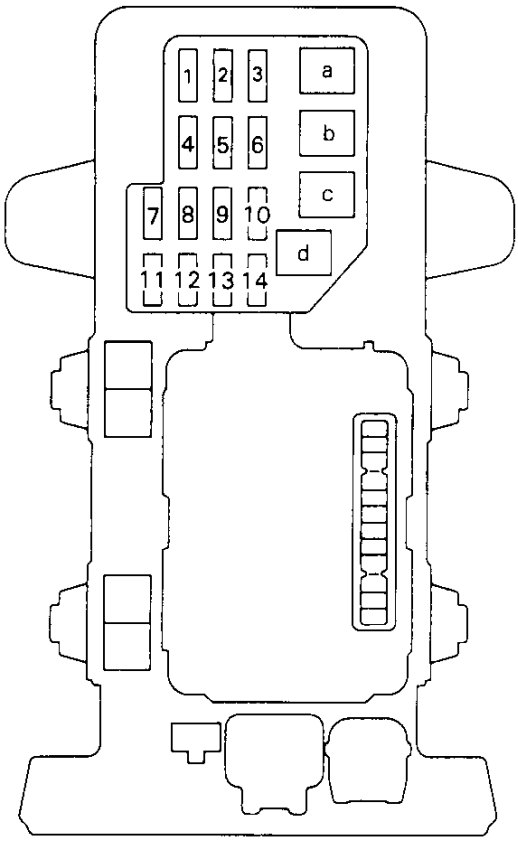

N10297
N10298

BE

Downloaded from www.Manualslib.com manuals search engine

Relay Block No. 2 and Junction Block No. 2

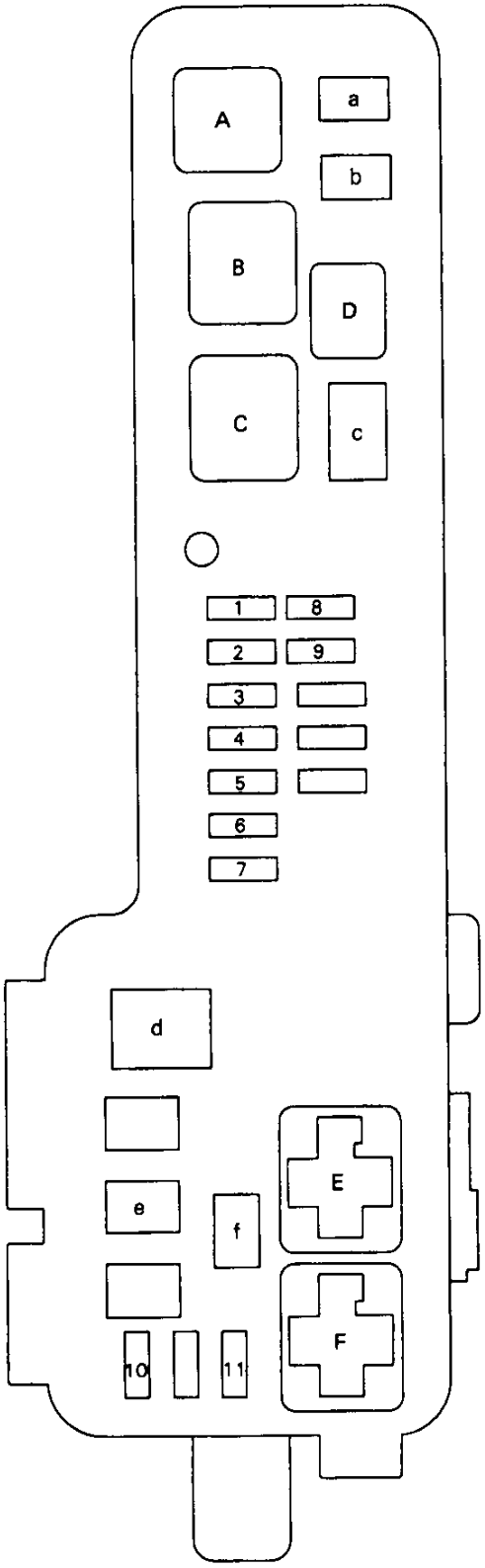

RELAY
A. Fan No. 1 Relay
B. Engine Main Relay
C. Headlight Relay
D. Horn Relay
E. Starter Relay
F. EFI Main Relay

FUSE

High Current Fuses

c.	HTR	40A
d.	ALT	100A
e.	MAIN	60A
f.	ABS	50A

Medium Current Fuses

a.	RDI	30A
b.	CDS	30A

Fuses

1.	AM2	30A
2.	HAZARD	10A
3.	HORN	7.5A
4.	Short Pin	
5.	RADIO No. 1	20A
6.	ECU-B	15A
7.	DOME	10A
8.	HEAD (LH) (Ex. Germany)	15A
	HEAD (LH) Lo (Germany)	15A
9.	HEAD (RH) (Ex. Germany)	15A
	HEAD (RH) Lo (Germany)	15A
10.	ALT-S	7.5A
11.	EFI	15A

N10295

Z12104

BE

Downloaded from www.Manualslib.com manuals search engine

Relay Block No.1

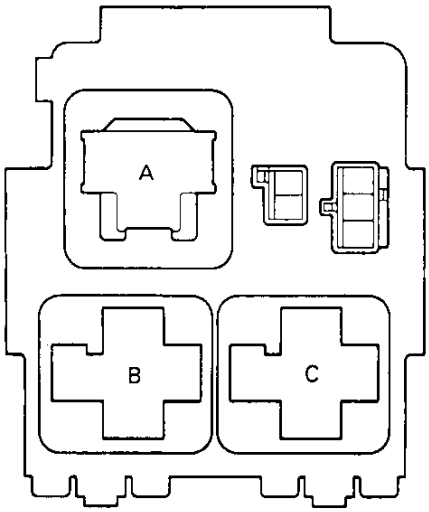

RELAY
A. Turn Signal Flasher Relay
B. Front Fog Light Relay
C. Rear Fog Light

Relay Block No.4

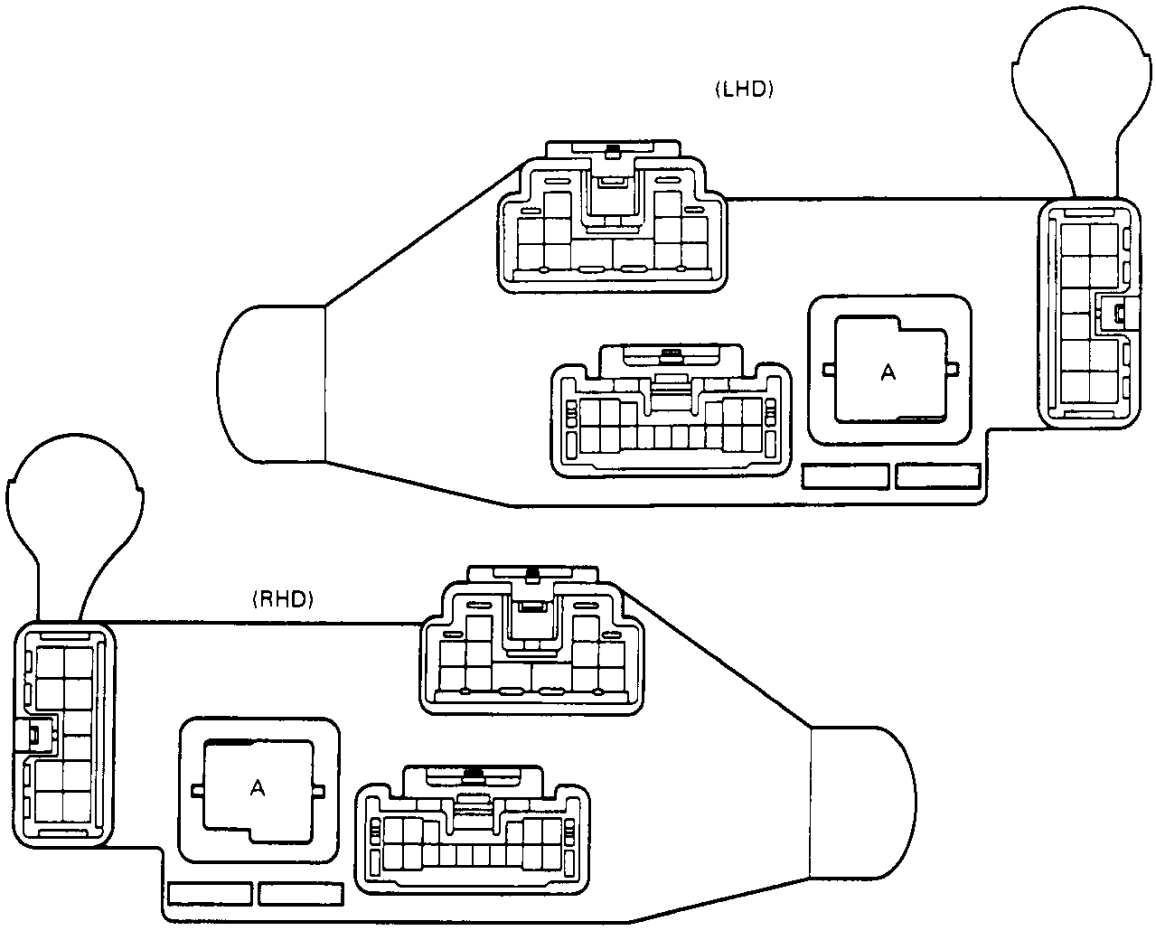

RELAY
A. Heater Relay

FUSE
Fuse
1. A/C

10A

N11176
N11150
N11151

Z12003

Downloaded from www.Manualslib.com manuals search engine

RelayBlock No.5

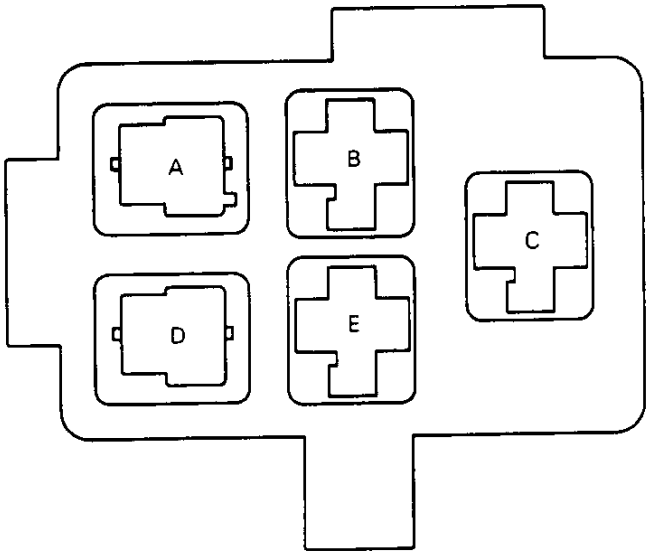

RELAY
A. ABS Solenoid Relay
B. Fan Relay No.2
C. A/C Magnetic Clutch Relay
D. ABS Motor Relay
E. Fan Relay No.3

Relay Block No.6

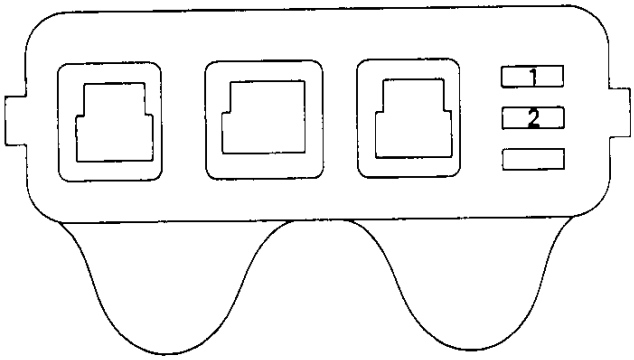

FUSE
Fuses

1. HEAD HI (RH)	15A
2. HEAD HI (LH)	15A

N11152
N10300

Downloaded from www.Manualslib.com manuals search engine

IGNITION SWITCH

BE03W-08

PARTS LOCATION

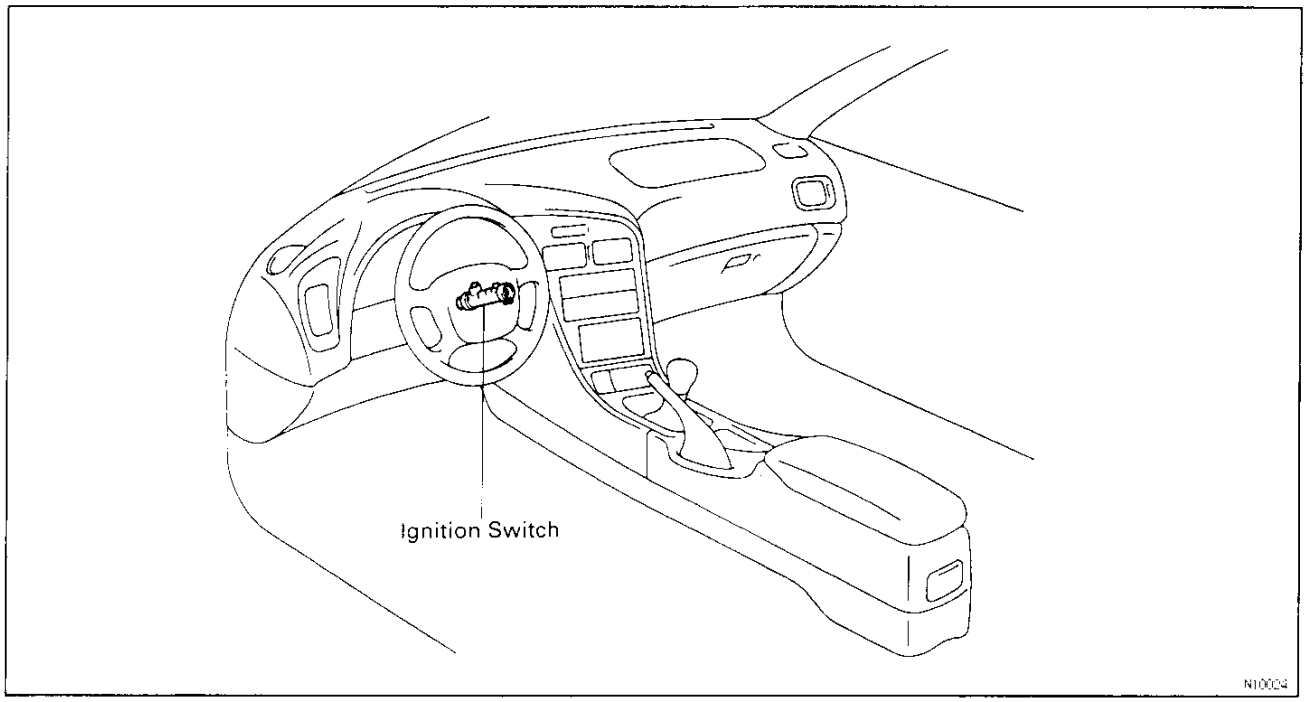

BE

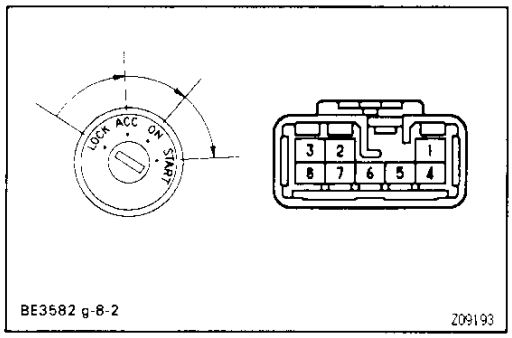

IGNITION SWITCH INSPECTION

BE1C0-06

INSPECT IGNITION SWITCH CONTINUITY

Switch position	Tester connection to terminal number	Specified value
LOCK	–	No continuity
ACC	5 – 7	Continuity
ON	4 – 5 – 7 2 – 3	Continuity
START	4 – 7 – 8 1 – 2 – 3	Continuity

If continuity is not as specified, replace the switch.

Downloaded from www.Manualslib.com manuals search engine

HEADLIGHT AND TAILLIGHT SYSTEM

BE10P-08

PARTS LOCATION

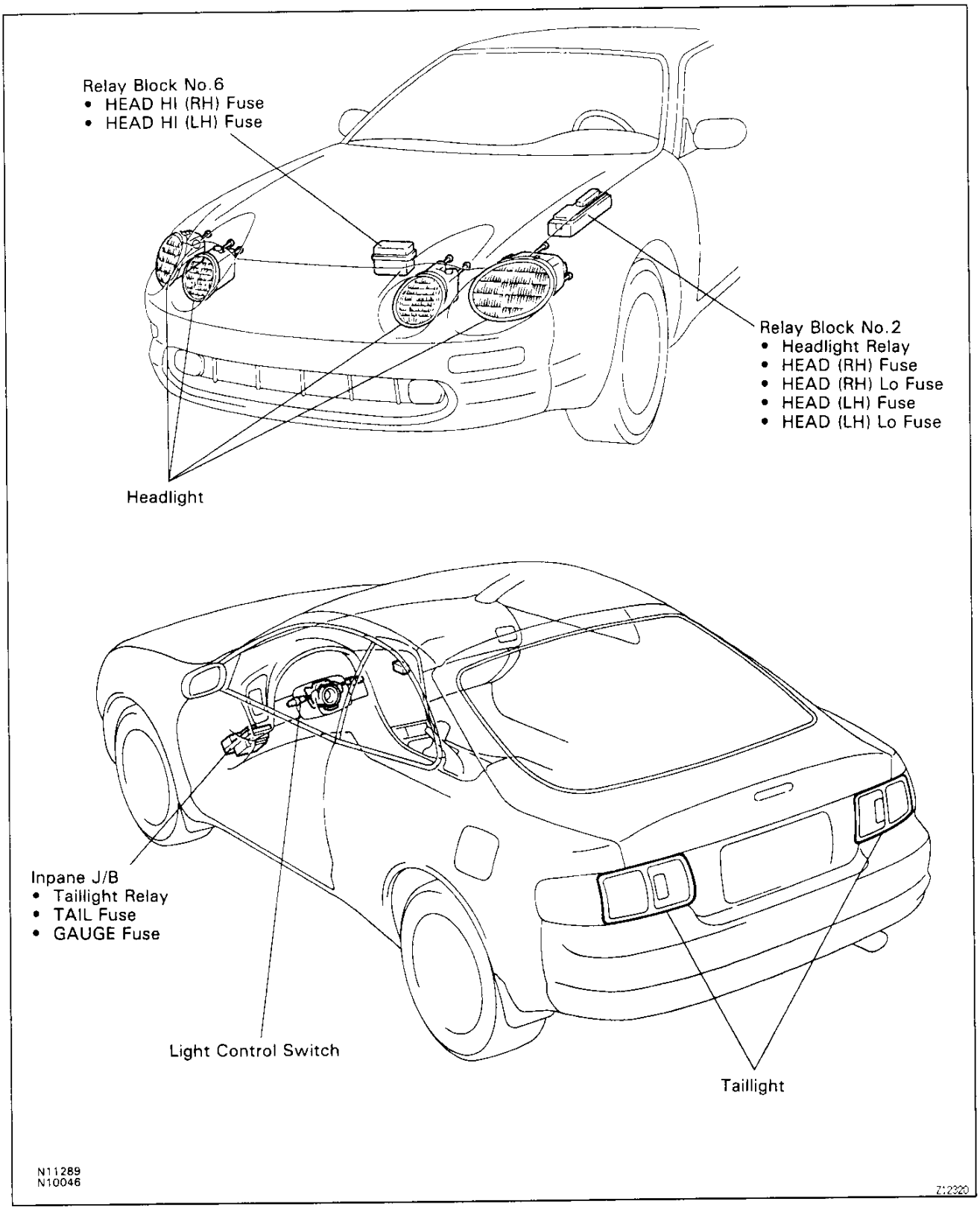

BE

Downloaded from www.Manualslib.com manuals search engine

BE083-00

TROUBLESHOOTING

The table below will be useful for you in troubleshooting these electrical problems. The most likely causes of the malfunction are shown in the order of their probability. Inspect each part in the order shown, and replace the part when it is found to be faulty.

W/O Daytime Running Light Relay System

Trouble	Parts name	See page
Headlight does not light (Taillight is normal)	1. MAIN FL	
	2. HEAD Fuse (LH,RH)	(BE—14 and 15)
	3. Headlight Control Relay	(BE—27)
	4. Dimmer Switch	(BE—26)
	5. Light Control Switch	(BE—26)
	6. Integration Relay	(BE—28)
	7. Wire Harness	—
	8. Headlight Bulb	—
Headlight does not light (Taillight does not light up)	1. Light Control Switch	(BE—26)
	2. Integration Relay	(BE—28)
	3. Wire Harness	—
	4. Headlight Bulb	—
Only one side light does not light	1. HEAD Fuse (LH,RH)	(BE—14 and 15)
	2. Headlight Bulb	—
	3. Wire Harness	—
"Lo—Beam" does not light	1. Light Control Switch	(BE—26)
	2. Wire Harness	
"Hi—Beam" does not light	1. Headlight Dimmer Switch	(BE—26)
	2. Wire Harness	
"Flash" does not light	1. Headlight Dimmer Switch	(BE—26)
	2. Wire Harness	

BE

W/ Daytime Running Light System

Trouble	Parts name	(See page)
Headlight does not light (Taillight is normal)	1. FL MAIN	—
	2. Headlight Control Relay	(BE—27)
	3. Daytime Running Light Relay	(BE—29)
	4. Headlight Dimmer Switch	(BE—26)
	5. Light Control Switch	(BE—26)
	6. Wire Harness	—
	7. Headlight Bulb	—
Headlight does not light (Taillight does not light up)	1. Light Control Switch	(BE—26)
	2. Daytime Running Light Relay	(BE—29)
	3. Integration Relay	(BE—28)
	4. Wire Harness	—
Only one side light does not light	1. Headlight Bulb	—
	2. Wire Harness	—

Downloaded from www.Manualslib.com manuals search engine

Trouble	Parts name	(See page)
"Lo–Beam" does not light (ALL)	1. Headlight Dimmer Switch	(BE–26)
	2. Daytime Running Light Relay	(BE–29)
	3. Wire Harness	
"Lo–Beam" does not light (ONE SIDE)	1. HEAD (LH) Lo Fuse	(BE–15)
	2. HEAD (RH) Lo Fuse	(BE–15)
	3. Headlight Bulb	
	4. Wire Harness	
"Hi–Beam" does not light (ALL)	1. Headlight Dimmer Switch	(BE–26)
	2. Daytime Running Light Relay	(BE–29)
	3. Wire Harness	
"Hi–Beam" does not light (ONE SIDE)	1. HEAD HI (LH) Fuse	(BE–15)
	2. HEAD HI (RH) Fuse	(BE–15)
	3. Headlight Bulb	
	4. Wire Harness	
"Flash" does not light	1. Headlight Dimmer Switch	(BE–26)
	2. Daytime Running Light Relay	(BE–29)
	3. Wire Harness	
"Auto Turn–off System" does not operate	1. Integration Relay	(BE–28)
	2. GAUGE Fuse	(BE–14)
	3. Daytime Running Light Relay	(BE–29)
	4. Wire Harness	
	5. Door Courtesy Switch (driver's)	(BE–71)
Headlight does not light with light control SW in HEAD.	1. Integration Relay	(BE–28)
	2. Light Control Switch	(BE–26)
	3. Daytime Running Light Relay	(BE–29)
	4. Wire Harness	
Headlight does not go out with light control SW in OFF	1. Headlight Control Relay	(BE–27)
	2. Daytime Running Light Relay	(BE–29)
	3. Wire Harness	
Taillight does not light with light control SW in TAIL	1. Taillight Relay	(BE–27)
	2. Light Control Switch	(BE–26)
	3. Daytime Running Light Relay	(BE–29)
Taillight does not go out with light control SW in OFF	1. Taillight Relay	(BE–27)
	2. Daytime Running Light Relay	(BE–29)
	3. Light Control switch	(BE–26)
	4. Wire Harness	
Headlight and Taillight do not light with engine running and light control SW in OFF	1. GAUGE Fuse	(BE–14)
	2. Daytime Running Light Relay	(BE–29)
	3. Wire Harness	
	4. Alternator L Terminal	
	5. Parking Brake Switch	(BE–70)

Downloaded from www.Manualslib.com manuals search engine

BE222-01

HEADLIGHT AIM ADJUSTMENT

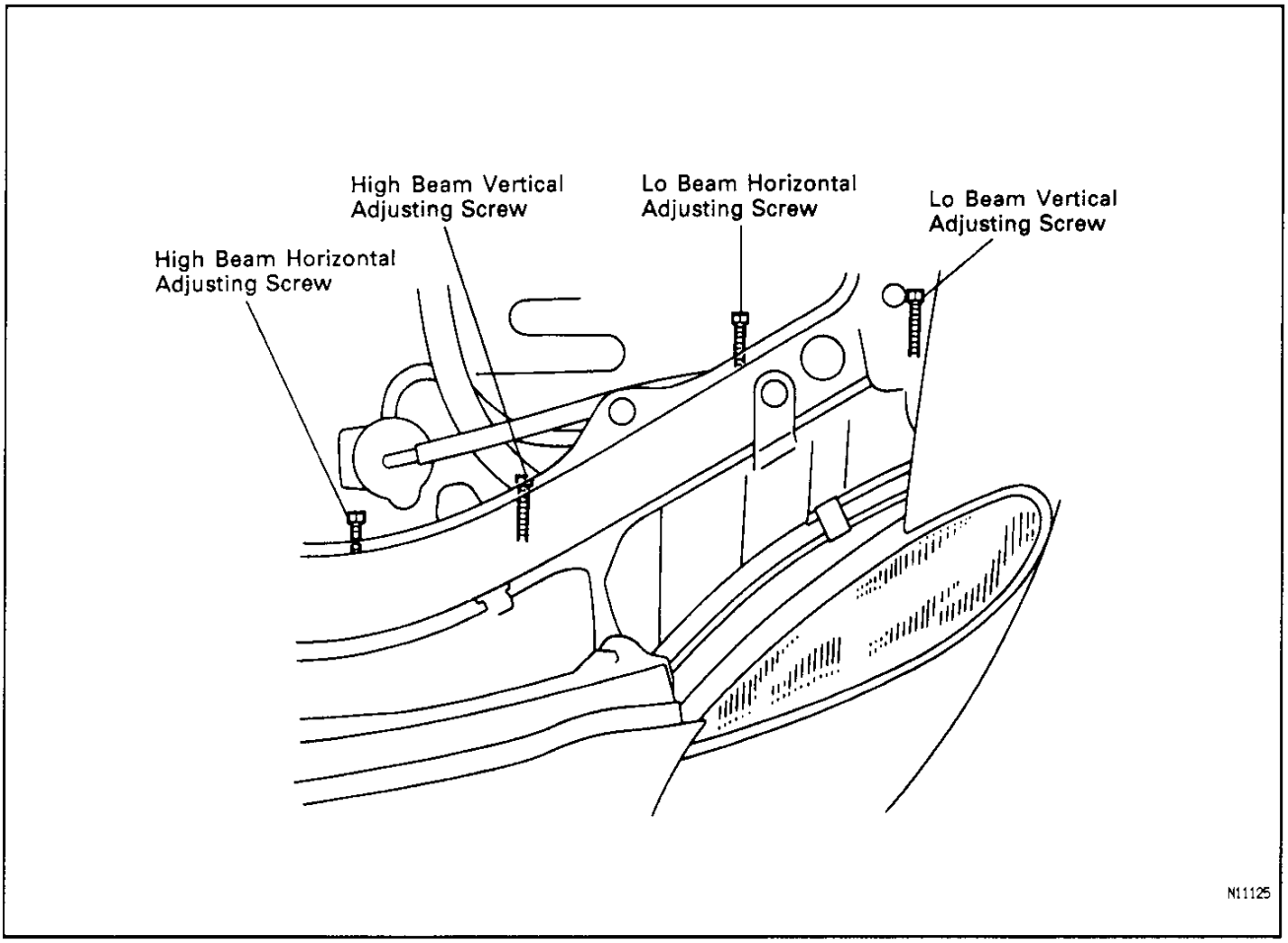

BE

Downloaded from www.Manualslib.com manuals search engine

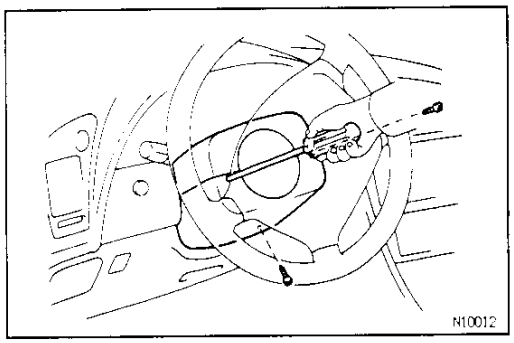

LIGHT CONTROL SWITCH REMOVAL AND INSTALLATION

BE1YL-03

1. REMOVE COLUMN COVER

(a) Remove 3 screws.

(b) Remove column cover.

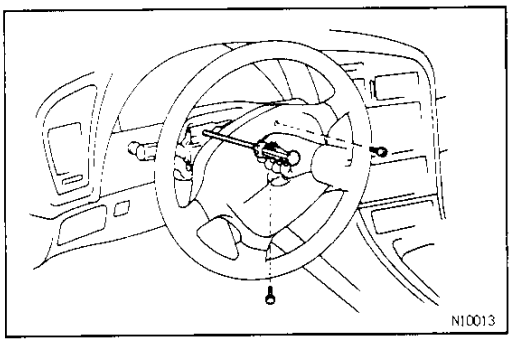

2. REMOVE COMBINATION SWITCH BODY

w/ Tilt Steering:

Remove 3 screws.

HINT: Use a long nose driver.

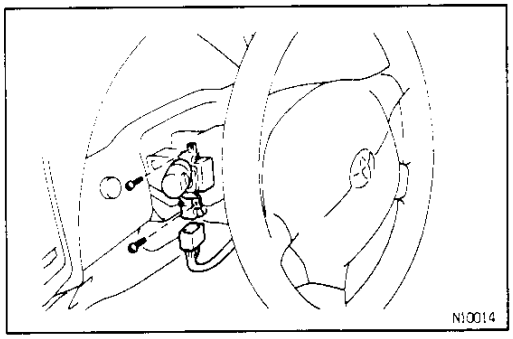

3. REMOVE LIGHT CONTROL SWITCH

(a) Disconnect the connector.

(b) Remove 2 screws.

(c) Remove the switch.

HINT: W/ Tilt Steering:

Lift up the switch body before removing the switch.

BE

INSTALL PARTS OF LIGHT CONTROL SWITCH IN REVERSE SEQUENCE OF REMOVAL

Downloaded from www.Manualslib.com manuals search engine

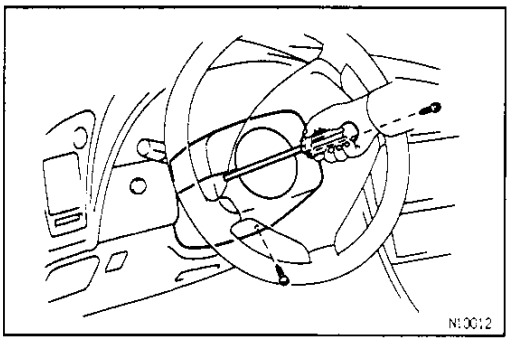

WIPER AND WASHER SWITCH REMOVAL AND INSTALLATION

BE1YM-02

1. REMOVE COLUMN COVER

(a) Remove 3 screws.

(b) Remove the column cover.

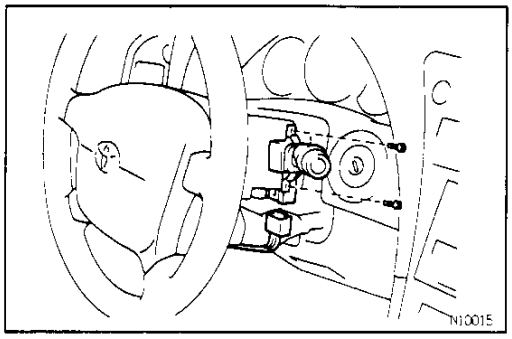

2. REMOVE WIPER AND WASHER SWITCH

(a) Disconnect the connector.

(b) Remove 2 screws.

(c) Remove switch.

INSTALL PARTS OF LIGHT CONTROL SWITCH IN REVERSE SEQUENCE OF REMOVAL

BE

Downloaded from www.Manualslib.com manuals search engine

BE1CT-03

COMBINATION SWITCH DISASSEMBLY AND ASSEMBLY

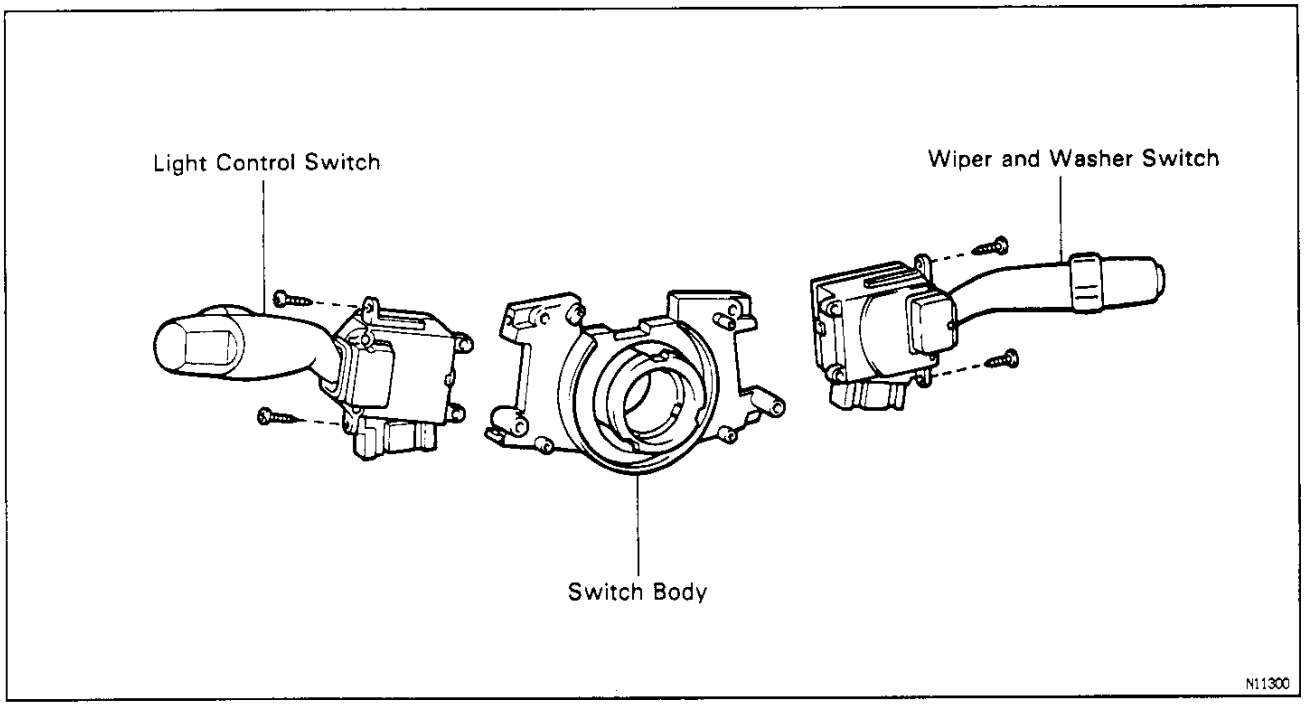

Downloaded from www.Manualslib.com manuals search engine

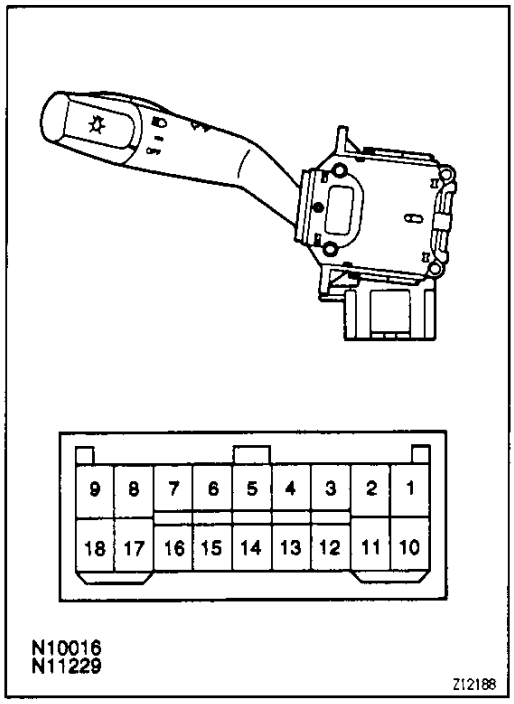

COMBINATION SWITCH INSPECTION

BE323-01

1. INSPECT LIGHT CONTROL SWITCH CONTINUITY
LHD Models:

Switch position	Tester connection to terminal number	Specified value
OFF	–	No continuity
TAIL	14 – 15	Continuity
HEAD	13 – 14 – 15	Continuity

If continuity is not as specified, replace the switch.

2. INSPECT DIMMER SWITCH CONTINUITY
LHD Models:

Switch position	Tester connection to terminal number	Specified value
Flash	8 – 9 – 16	Continuity
Low beam	16 – 17	Continuity
High beam	8 – 16	Continuity

If continuity is not as specified, replace the switch.

BE

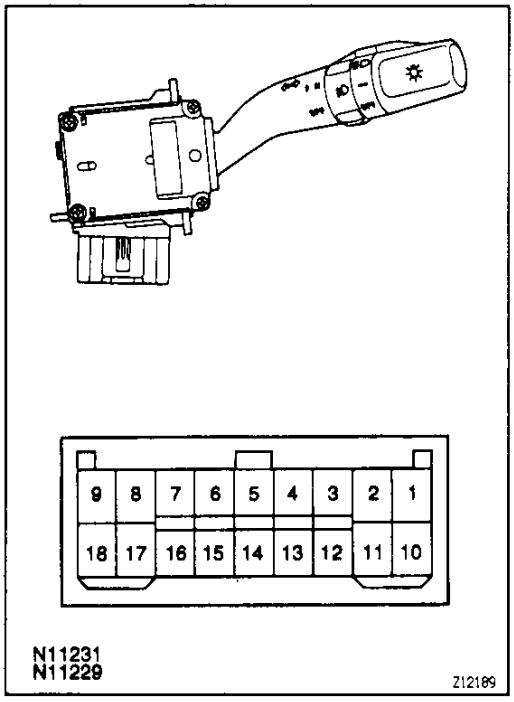

3. INSPECT LIGHT CONTROL SWITCH CONTINUITY
RHD Models:

Switch position	Tester connection to terminal number	Specified value
OFF	–	No continuity
TAIL	16 – 17	Continuity
HEAD	15 – 16 – 17	Continuity

If continuity is not as specified, replace the switch.

4. INSPECT DIMMER SWITCH CONTINUITY
RHD Models:

Switch position	Tester connection to terminal number	Specified value
Flash	1 – 2 – 10	Continuity
Low Beam	10 – 11	Continuity
High Beam	2 – 10	Continuity

If continuity is not as specified, replace the switch.

Downloaded from www.Manualslib.com manuals search engine

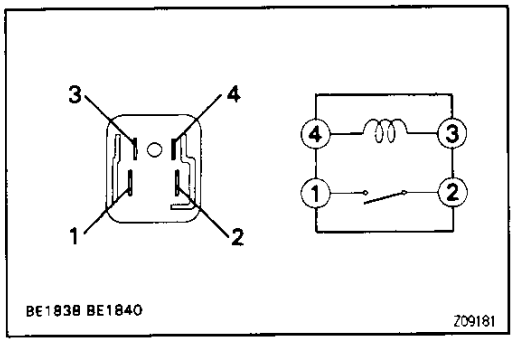

HEADLIGHT CONTROL RELAY INSPECTION

INSPECT HEADLIGHT CONTROL RELAY CONTINUITY

Condition	Tester connection to terminal number	Specified value
Constant	3 – 4	Continuity
Apply +B between terminal 3 and 4.	1 – 2	Continuity

If continuity is not as specified, replace the relay.

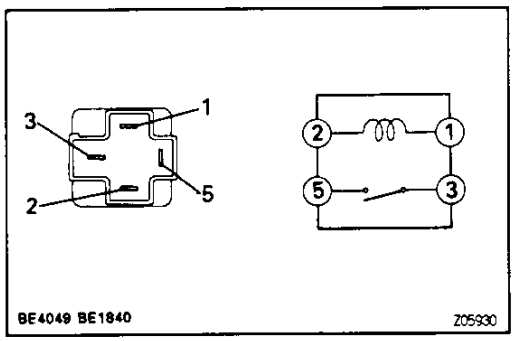

TAILLIGHT RELAY INSPECTION

BE

INSPECT TAILLIGHT RELAY CONTINUITY

Condition	Tester connection to terminal number	Specified value
Constant	1 – 2	Continuity
Apply +B between terminals 1 and 2.	3 – 5	Continuity

If continuity is not as specified, replace the relay.

Downloaded from www.Manualslib.com manuals search engine

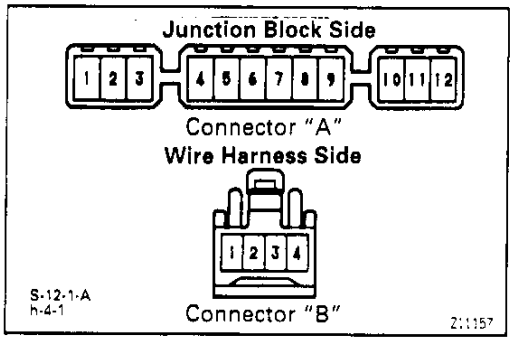

INTEGRATION RELAY INSPECTION

INSPECT INTEGRATION RELAY

Light Auto Turn Off System / Circuit

Remove the relay from junction block and inspect the connectors on the wire harness and junction block side, as shown in the chart.

Tester connection to terminal number	Condition	Specified value (Continuity)
A4 – Ground	Passenger's door courtesy switch ON	Continuity
A6 – Ground	Driver's door courtesy switch ON	Continuity
A10 – Ground	Constant	Continuity
B1 – Ground	Light control switch position OFF or HEAD	No continuity
B1 – Ground	Light control switch position TAIL	Continuity
B4 – Ground	Light control switch position OFF or TAIL	No continuity
B4 – Ground	Light control switch position HEAD	Continuity

BE

Tester connection to terminal number	Condition	Specified value (Voltage)
A1 – Ground	Constant	Battery voltage
A7 – Ground	Ignition switch position LOCK or ACC	No voltage
A7 – Ground	Ignition switch position ON	Battery voltage
B2 – Ground	Constant	Battery voltage
B3 – Ground	Constant	Battery voltage

If the circuit is as specified, trying replacing the relay with a new one.
If the circuit is not as specified, inspect the circuits connected to other parts.

Downloaded from www.Manualslib.com manuals search engine

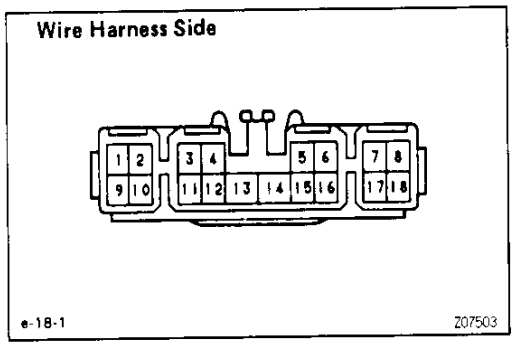

BE10W-09

DAYTIME RUNNING LIGHT MAIN RELAY INSPECTION

1. **INSPECT PARKING BRAKE SWITCH (See page BE−70)**
2. **INSPECT DAYTIME RUNNING LIGHT MAIN RELAY Circuit**
   Disconnect the connector from relay and inspect the connector on wire harness side, as shown.

Tester connection to terminal number	Condition	Specified value (Continuity)
16 – Ground	Headlight dimmer switch position Low beam	No continuity
16 – Ground	Headlight dimmer switch position Flash or High beam	Continuity
8 – Ground	Parking brake switch position OFF	No continuity
8 – Ground	Parking brake switch position ON	Continuity
13 – Ground	Constant	Continuity
18 – Ground	Constant	Continuity

BE

Tester connection to terminal number	Condition	Specified value (Voltage)
2 – Ground	Ignition switch position LOCK or ACC	No voltage
2 – Ground	Ignition switch position ON	Battery voltage
11 – Ground	Engine Stop	No voltage
11 – Ground	Engine Running	Battery voltage
15 – Ground	Constant	Battery voltage
17 – Ground	Constant	Battery voltage

If circuit is as specified, trying replacing the relay with a new one. If the circuit is not as specified, inspect the circuit connected to other parts.

Downloaded from www.Manualslib.com manuals search engine

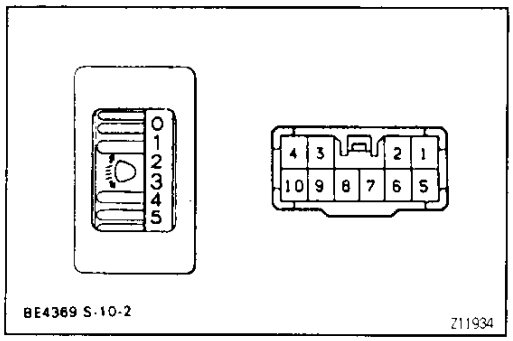

BE224-01

HEADLIGHT BEAM LEVEL CONTROL INSPECTION

1. INSPECT HEADLIGHT BEAM LEVEL CONTROL SWITCH CONTINUITY

Switch position	Tester connection to terminal number	Specified value
0	4 – 10	Continuity
1	4 – 9	Continuity
2	4 – 8	Continuity
3	4 – 7	Continuity
4	4 – 6	Continuity
5	4 – 5	Continuity
Illumination	2 – 3	Continuity

If continuity is not as specified, replace the switch.

BE

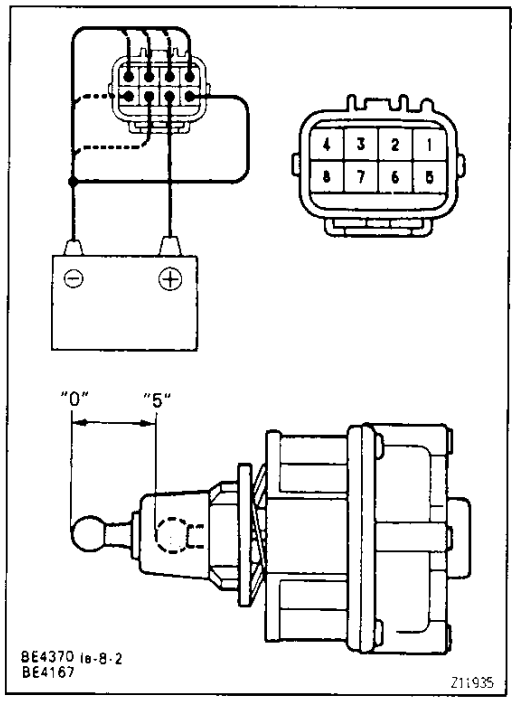

2. INSPECT ACTUATOR OPERATION

(a) Connect the positive (+) lead from the battery to terminal 6 and the negative (–) lead to terminal 5.

(b) Ground each terminal and check that each mode operates as shown in the chart and illustration.

Terminal	Headlight Beam Level
1 – Ground	"0"
2 – Ground	"1"
3 – Ground	"2"
4 – Ground	"3"
5 – Ground	"4"
6 – Ground	"5"

If operation is not as specified, replace the actuator.

Downloaded from www.Manualslib.com manuals search engine

FRONT FOG LIGHT SYSTEM

PARTS LOCATION

BE225-01

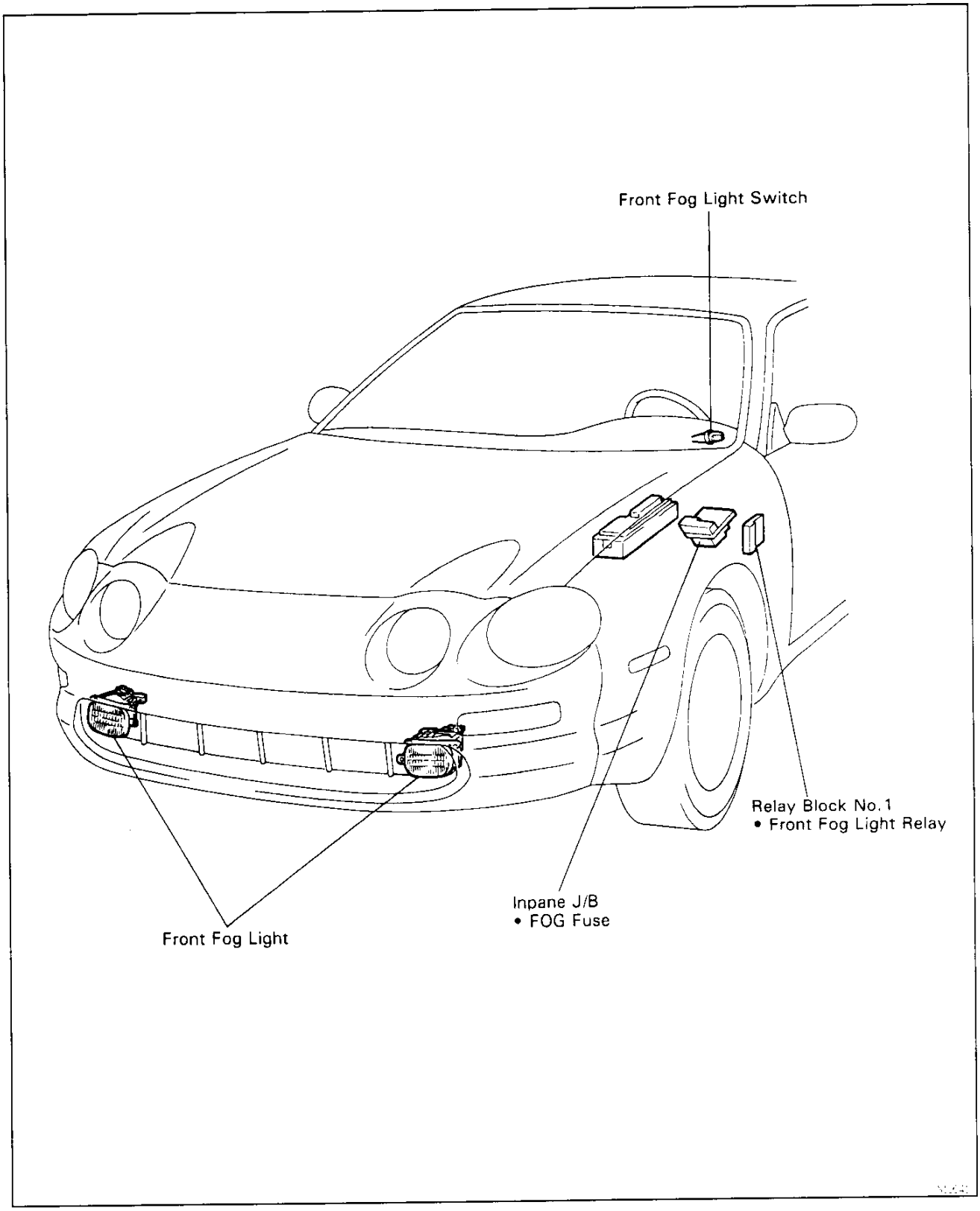

BE

Downloaded from www.Manualslib.com manuals search engine

TROUBLESHOOTING

BE226-01

The table below will be useful for you in troubleshooting these electrical problems. The most likely causes of the malfunction are shown in the order of their probability. Inspect each part in the order shown, and replace the part when it is found to be faulty.

Trouble	Parts' name	(See page)
Front Fog light does not light with light control switch HEAD. (Headlight is normal)	1. FOG Fuse	(BE−14)
	2. Front Fog Light Relay	(BE−33)
	3. Front Fog Light Switch	(BE−32)
	4. Wire Harness	—
Front Fog Light does not light with light control switch HEAD. (Headlight does not light up)	1. Inspect Headlight System	(BE−19)
	2. Wire Harness	—
Only one light does not light up.	1. Bulb	(BE−8)
	2. Wire Harness	—

BE

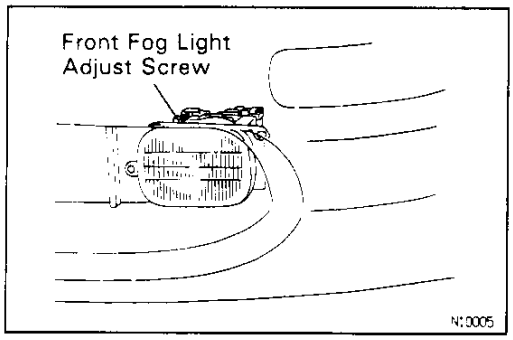

FRONT FOG LIGHT AIM ADJUSTMENT

BE227-01

Adjust Screw: Vertical Direction

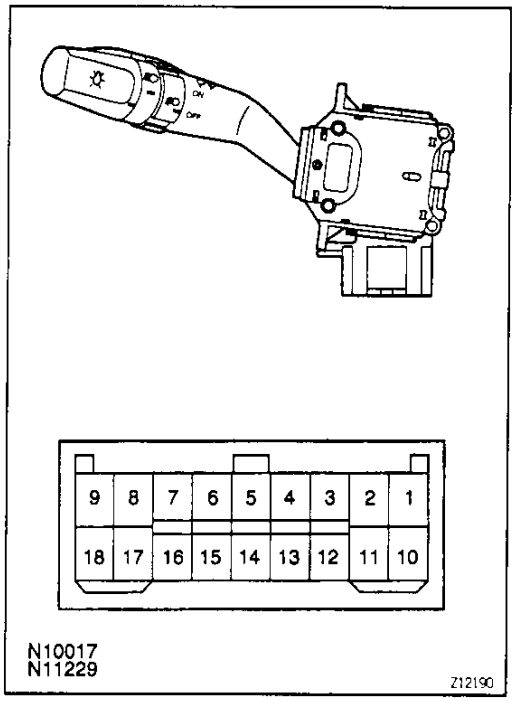

FRONT FOG LIGHT SWITCH INSPECTION

BE228-01

1. INSPECT FRONT FOG LIGHT SWITCH CONTINUITY LHD Models:

Switch position	Tester connection to terminal number	Specified value
OFF	—	No continuity
ON	10 − 11	Continuity

If continuity is not as specified, replace the switch.

Downloaded from www.Manualslib.com manuals search engine

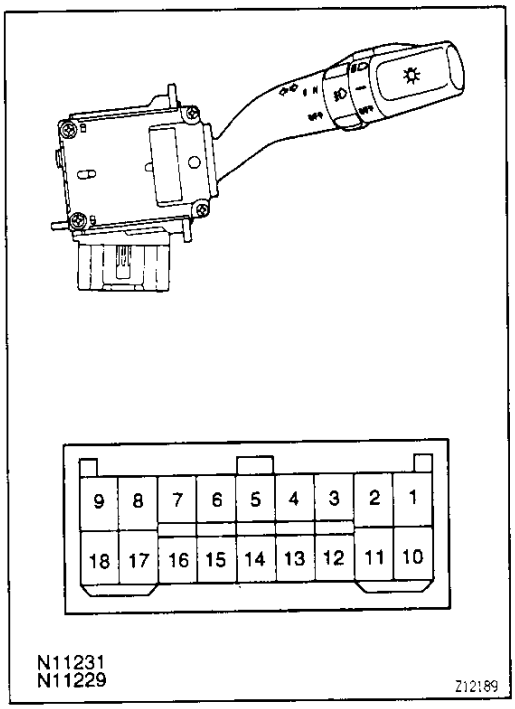

2. INSPECT FOG LIGHT SWITCH CONTINUITY

RHD Models:

Switch position	Tester connection to terminal number	Specified value
OFF	—	No continuity
ON	12 — 13	Continuity

If continuity is not as specified, replace the switch.

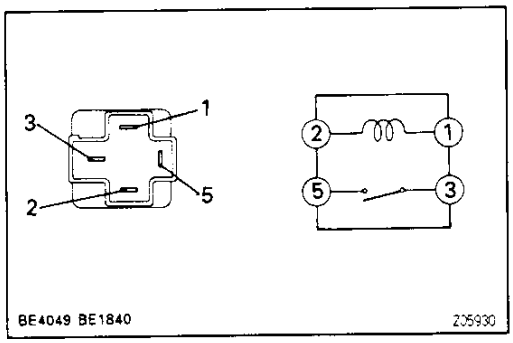

FRONT FOG LIGHT RELAY INSPECTION

BE229-01

BE

INSPECT FRONT FOG LIGHT RELAY CONTINUITY

Condition	Tester connection to terminal number	Specified value
Constant	1 — 2	Continuity
Apply +B between terminal 1 and 2.	3 — 5	Continuity

If continuity is not as specified, replace the relay.

Downloaded from www.Manualslib.com manuals search engine

REAR FOG LIGHT SYSTEM

PARTS LOCATION

BE22A-01

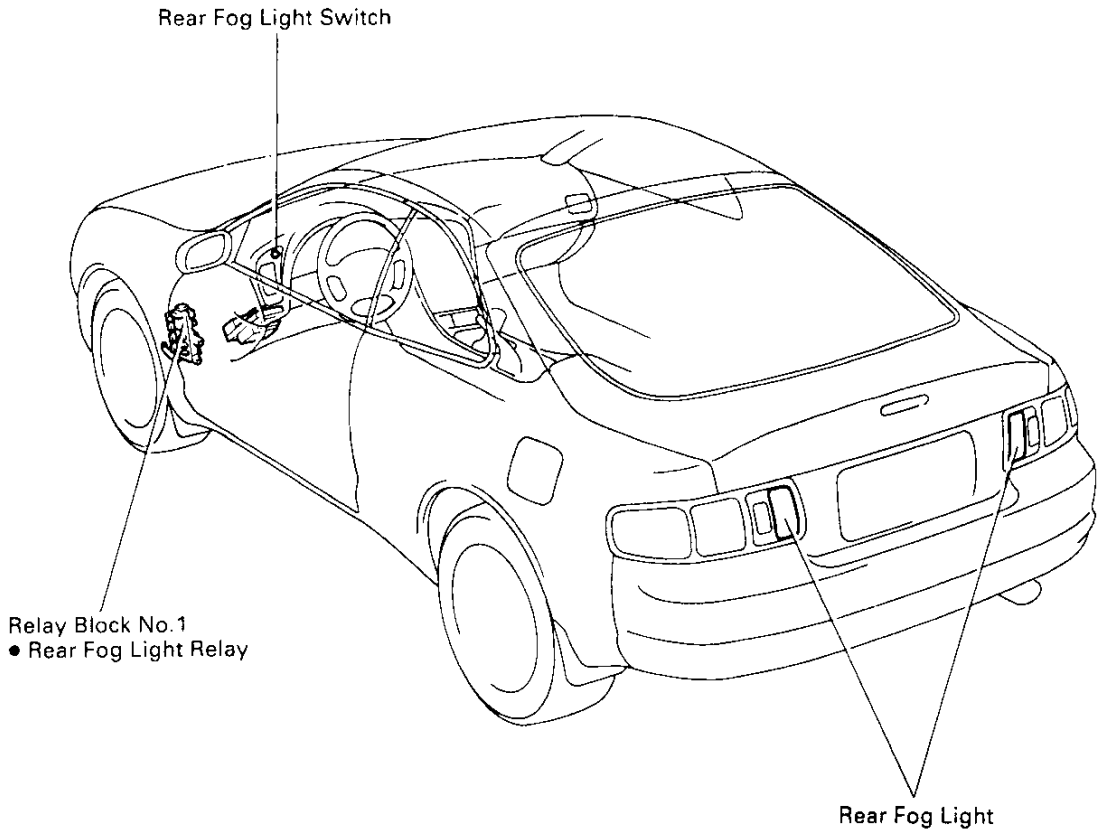

N11256

Downloaded from www.Manualslib.com manuals search engine

BE22B-01

TROUBLESHOOTING

The table below will be useful for you in troubleshooting these electrical problems. The most likely causes of the malfunction are shown in the order of their probability. Inspect each part in the order shown, and replace the part when it is found to be faulty.

Trouble	Parts' name	(See page)
Rear Fog Light does not light with light control switch HEAD. (Headlight is normal)	1. FOG Fuse	(BE−14)
	2. Rear Fog Light Relay	(BE−35)
	3. Rear Fog Light Switch	(BE−35)
	4. Wire Harness	—
Rear Fog Light does not light with light control switch HEAD. (Headlight does not light up)	1. Headlight System	(BE−19)
	2. Wire Harness	—
Only one light does not light up.	1. Bulb	(BE−8)
	2. Wire Harness	—

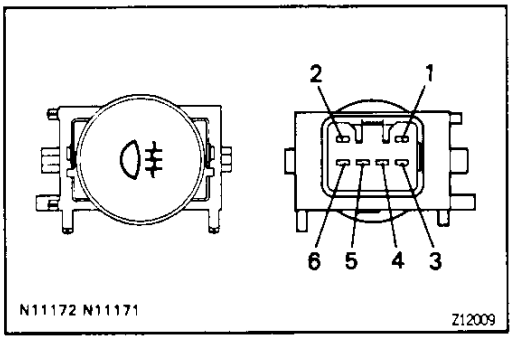

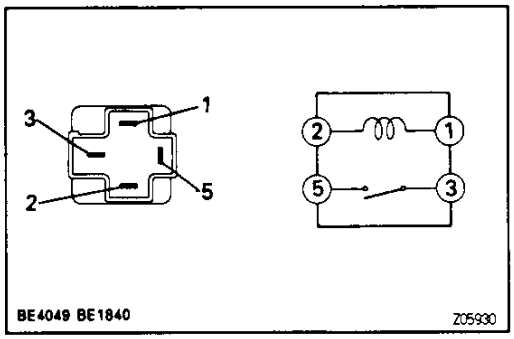

REAR FOG LIGHT SWITCH INSPECTION

BE22C-01

BE

INSPECT REAR FOG LIGHT SWITCH CONTINUITY

Switch position	Tester connection to terminal number	Specified value
OFF	—	No continuity
ON	3 − 6	Continuity
Illumination	1 − 4	Continuity

If continuity is not as specified, replace the switch.

REAR FOG LIGHT RELAY INSPECTION

BE22D-01

INSPECT REAR FOG LIGHT RELAY CONTINUITY

Condition	Tester conneciton to terminal number	Specified value
Constant	1 − 2	Continuity
Apply +B between terminal 1 and 2.	3 − 5	Continuity

If continuity is not as specified, replace the relay.

Downloaded from www.Manualslib.com manuals search engine

TURN SIGNAL AND HAZARD WARNING SYSTEM

PARTS LOCATION

BE04N-0A

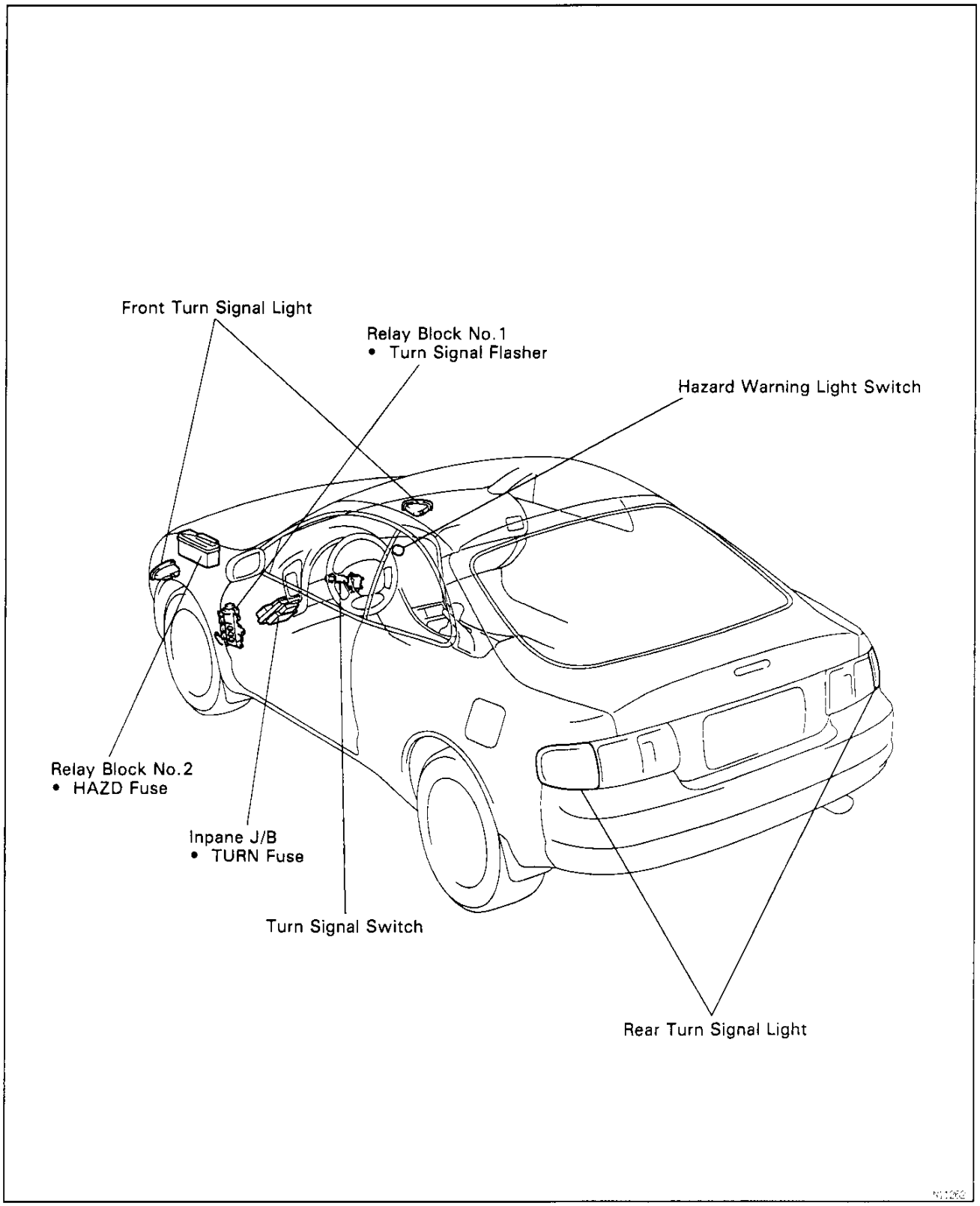

BE

Downloaded from www.Manualslib.com manuals search engine

BE04Q-09

TROUBLESHOOTING

The table below will be useful for you in troubleshooting these electrical problems. The most likely causes of the malfunction are shown in the order of their probability. Inspect each part in the order shown, and replace the part when it is found to be faulty.

Trouble	Parts name	(See page)
"Hazard" and "Turn" do not light up	1. Hazard Warning Switch 2. Turn Signal Flasher 3. Wire Harness	(BE−39) (BE−39)
The flashing frequency is abnormal	1. Bulb 2. Turn Signal Flasher 3. Wire Harness	 (BE−39)
Hazard warning light does not light up (Turn is normal)	1. HAZARD Fuse 2. Wire Harness	(BE−15)
Hazard warning light does not light up in one direction	1. Hazard Warning Switch 2. Wire Harness	(BE−39)
*1 Turn signal does not light up	1. Ignition Switch 2. TURN Fuse 3. Turn Signal Switch 4. Wire Harness	(BE−18) (BE−14) (BE−38)
*2 Turn signal does not light up	1. TURN Fuse 2. Turn Signal Switch 3. Wire Harness	(BE−14) (BE−38)
Turn signal does not light up in one direction	1. Turn Signal Switch 2. Wire Harness	(BE−38)
Only one bulb does not light up	1. Bulb 2. Wire Harness	

*1: Combination Meter, Wiper and Washer do not operate.
*2: Combination Meter, Wiper and Washer are normal.

BE

Downloaded from www.Manualslib.com manuals search engine

BE22E-01

TURN SIGNAL SWITCH INSPECTION

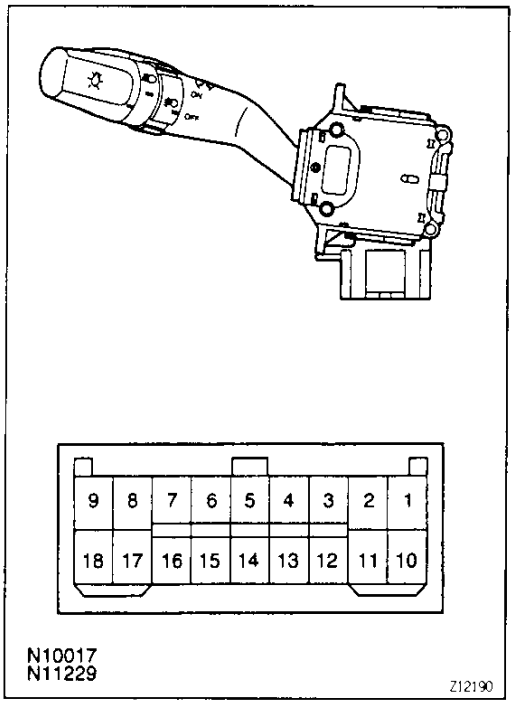

1. INSPECT TURN SIGNAL SWITCH CONTINUITY LHD Models:

Switch position	Tester connection to terminal number	Specified value
Left turn	1 – 2	Continuity
Neutral	–	No continuity
Right turn	2 – 3	Continuity

If continuity is not as specified, replace the switch.

BE

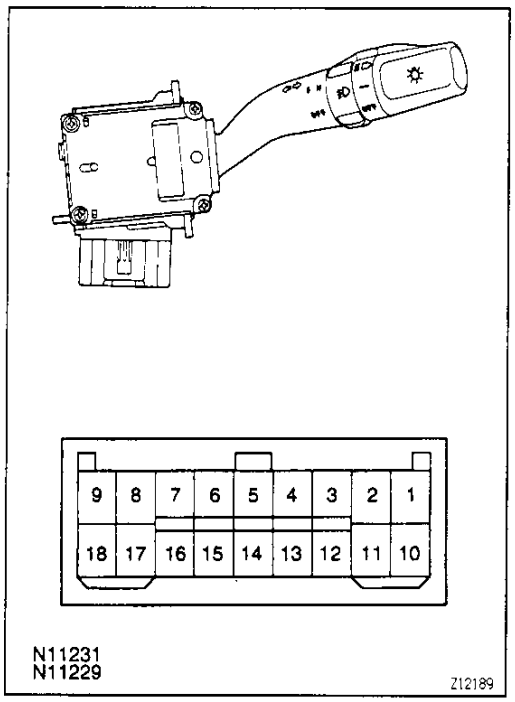

2. INSPECT TURN SIGNAL SWITCH CONTINUITY RHD Models:

Switch position	Tester connection to terminal number	Specified value
Left turn	7 – 8	Continuity
Neutral	–	No continuity
Right turn	8 – 9	Continuity

If continuity is not as specified, replace the switch.

Downloaded from www.Manualslib.com manuals search engine

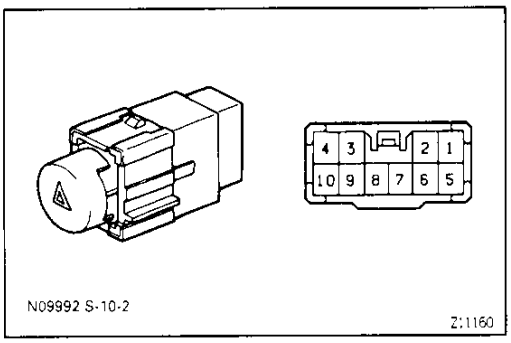

HAZARD WARNING SWITCH INSPECTION

BE1CZ-04

INSPECT HAZARD WARNING SWITCH CONTINUITY

Condition	Tester connection to terminal number	Specified value
Switch OFF	7 – 10	Continuity
Switch ON	7 – 8 4 – 5 – 6 – 9	Continuity
Illumination circuit	2 – 3	Continuity

If continuity is not as specified, replace the switch.

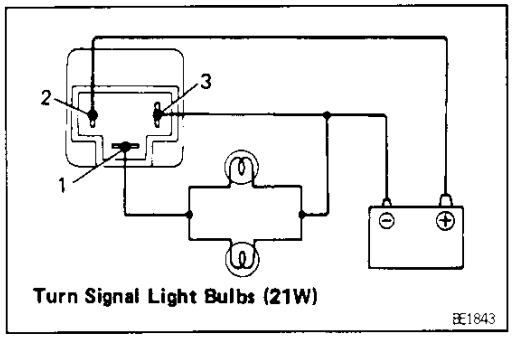

TURN SIGNAL FLASHER INSPECTION

BE04U-0C

BE

INSPECT TURN SIGNAL FLASHER OPERATION

(a) Connect the positive (+) lead from the battery to terminal 2 and the negative (−) lead to terminal 3.

(b) Connect the 2 turn signal light bulbs parallel to each other to terminals 1 and 3, check that the bulbs flash.
HINT: The turn signal lights should flash 60 or 120 times per minute.
If one of the front or rear turn signal lights has an open circuit, the number of flashers will be more than 140 per minute.
If operation is not as specified, replace the flasher.

Downloaded from www.Manualslib.com manuals search engine

BACK—UP LIGHT SYSTEM

BE012—07

PARTS LOCATION

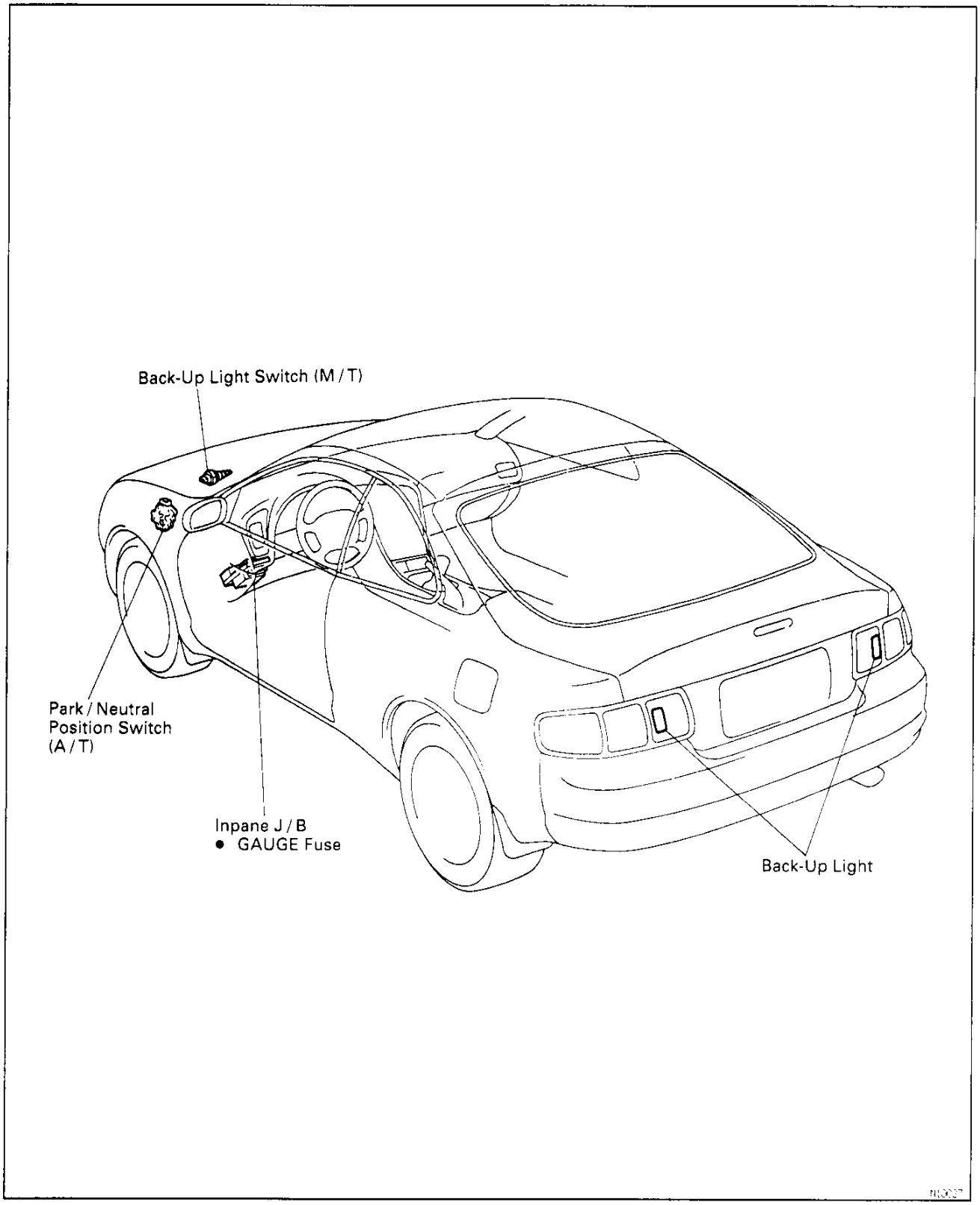

Downloaded from www.Manualslib.com manuals search engine

TROUBLESHOOTING

The table below will be useful for you in troubleshooting these electrical problems. The most likely causes of the malfunction are shown in the order of their probability. Inspect each part in the order shown, and replace the part when it is found to be faulty.

Trouble	Parts name	See page
Back—Up Light does not light up	1. GAUGE Fuse	(BE—14)
	2. Back—Up Light Switch (M/T)	(BE—41)
	Neutral Start Switch (A/T)	
	3. Wire Harness	
	4. Bulb	
Back—Up Light remains always on	1. Wire Harness	
Only one light does not light up	1. Wire Harness	
	2. Bulb	

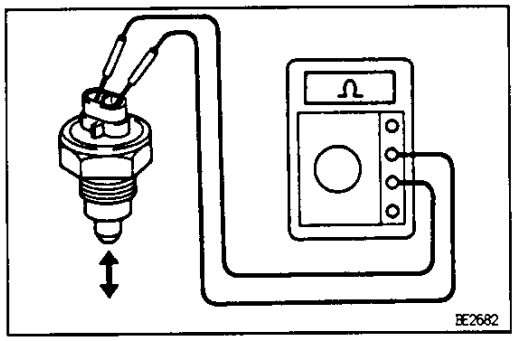

BACK—UP LIGHT SWITCH INSPECTION

INSPECT BACK—UP LIGHT SWITCH

Switch position	Tester connection to terminal number	Specified value
Free	1 — 2	No continuity
Push	1 — 2	Continuity

If continuity is not as specified, replace the switch.

NEUTRAL START SWITCH INSPECTION

INSPECT NEUTRAL START SWITCH CONTINUITY

See AX section

Downloaded from www.Manualslib.com manuals search engine

STOP LIGHT SYSTEM
PARTS LOCATION

BE01B-06

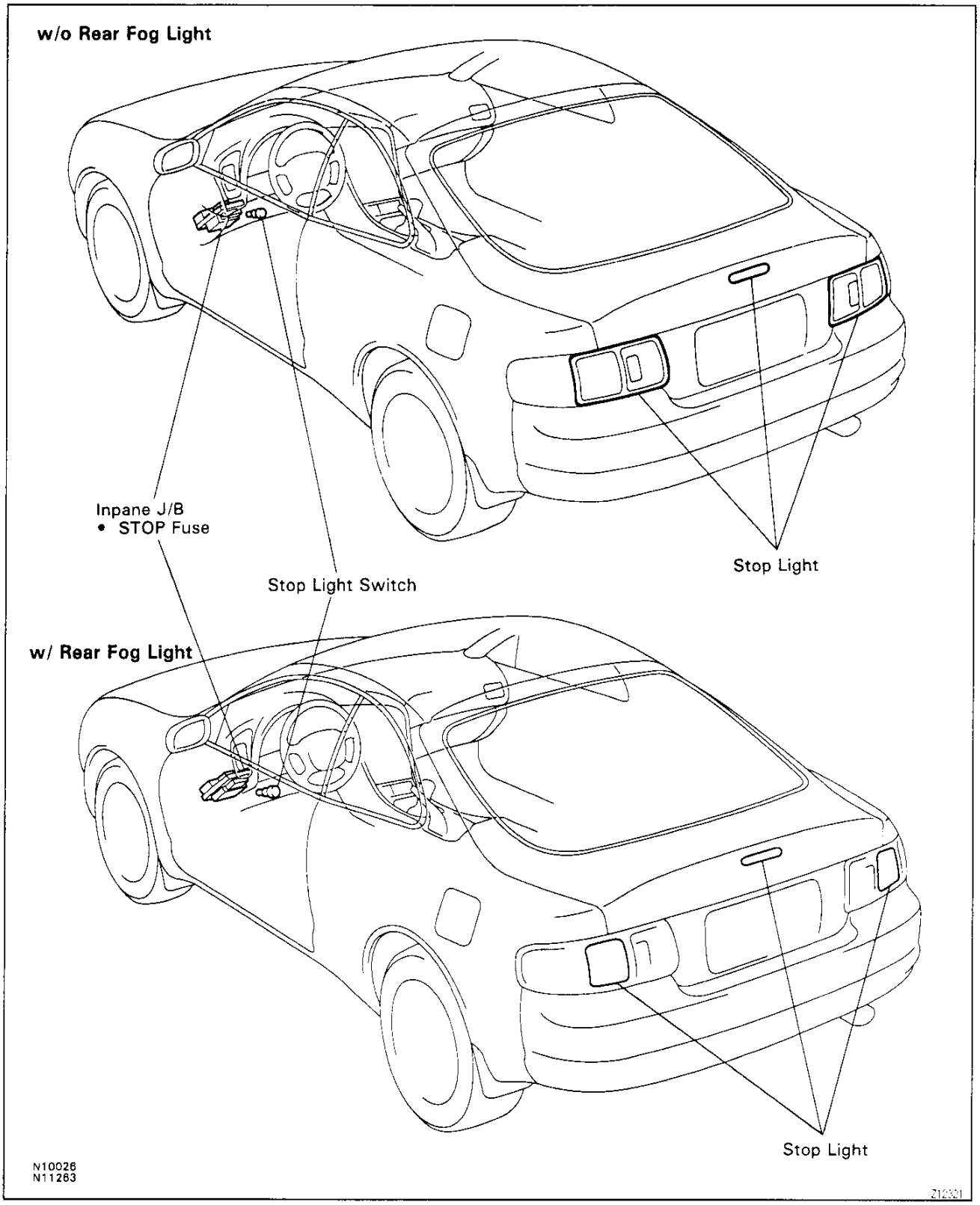

BE

Downloaded from www.Manualslib.com manuals search engine

BE016-0A

TROUBLESHOOTING

The table below will be useful for you in troubleshooting these electrical problems. The most likely causes of the malfunction are shown in the order of their probability. Inspect each part in the order shown, and replace the part when it is found to be faulty.

Trouble	Parts name	See page
Stop light does not light up	1. STOP Fuse 2. Stop Light Switch 3. Wire Harness 4. Bulb	(BE–14) (BE–43)
Stop light remains always on	1. Stop Light Switch 2. Wire Harness	(BE–43)
Only one light does not light up	1. Wire Harness 2. Bulb	

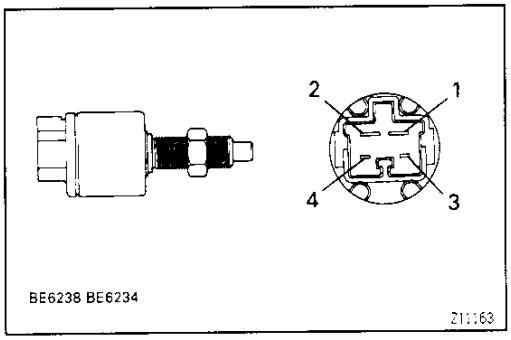

BE1D6-05

STOP LIGHT SWITCH INSPECTION

BE

INSPECT STOP LIGHT SWITCH CONTINUITY

Switch position	Tester connection to terminal number	Specified value
Switch pin free (Pedal depressed)	1 – 2	Continuity
Switch pin pushed in (Pedal released)	3 – 4	Continuity

If continuity is not as specified, replace the switch.

Downloaded from www.Manualslib.com manuals search engine

HEADLIGHT CLEANER SYSTEM

PARTS LOCATION

BE22F-01

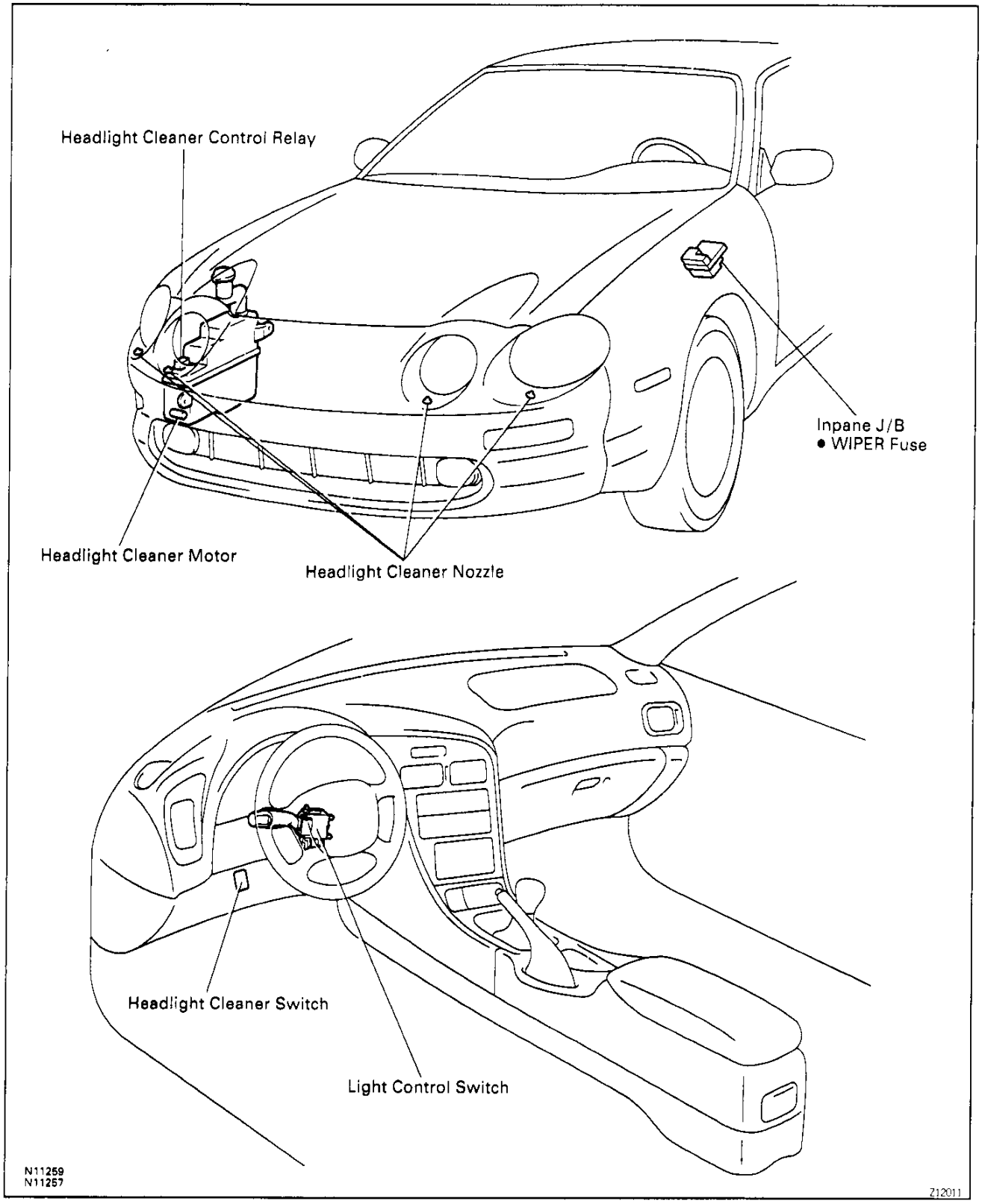

BE

Downloaded from www.Manualslib.com manuals search engine

BE22G-01

TROUBLESHOOTING

The table below will be useful for you in troubleshooting these electrical problems. The most likely causes of the malfunction are shown in the order of their probability. Inspect each part in the order shown, and replace the part when it is found to be faulty.

Trouble	Parts name	(See page)
Headlight cleaner does operate	1. Cleaner hose or nozzle clogged	—
	2. WIPER Fuse	(BE−14)
	3. Cleaner Motor	(BE−46)
	4. Cleaner Switch	(BE−45)
	5. Cleaner Control Relay	(BE−46)
	6. Light Control Switch	(BE−26)
	7. Wire Harness	—

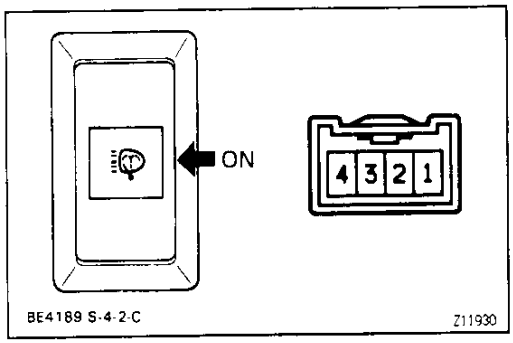

BE22H-01

HEADLIGHT CLEANER SWITCH INSPECTION

BE

INSPECT HEADLIGHT CLEANER SWITCH CONTINUITY

Switch position	Tester connection to terminal number	Specified value
OFF	—	No continuity
ON	1 − 4	Continuity
Illumination	2 − 3	Continuity

If continuity is not as specified, replace the switch.

Downloaded from www.Manualslib.com manuals search engine

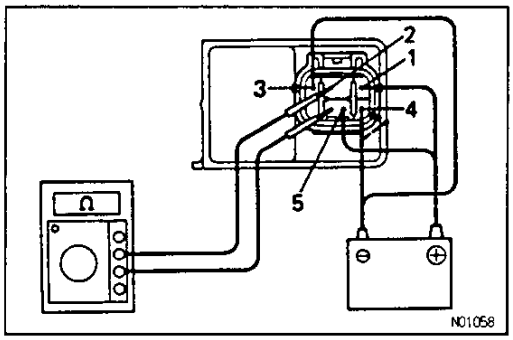

HEADLIGHT CLEANER CONTROL RELAY INSPECTION

INSPECT HEADLIGHT CLEANER CONTROL RELAY OPERATION

(a) Check that there is no continuity between terminals 2 and 5.

(b) Connect the positive (+) lead from the battery to terminals 1 and 5, the negative (−) lead to terminal 3.

(c) Connect the negative (−) lead from the battery to terminal 4, check that there is continuity between terminals 2 and 5 for 0.4 − 0.6 seconds, then there is no continuity.

If operation is not as specified, replace the relay.

BE

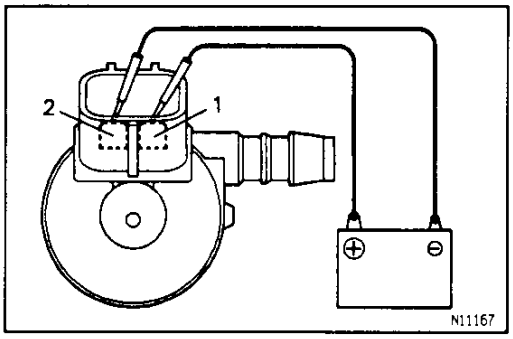

HEADLIGHT CLEANER MOTOR INSPECTION

INSPECT HEADLIGHT CLEANER MOTOR OPERATION

Connect the positive (+) lead from the battery to terminal 1 and negative (−) lead to terminal 2, check that the motor operates.

NOTICE: These test must be performed quickly (within 3 − 5 seconds) to prevent the coil from burning out.

If operation is not as specified, replace the motor.

Downloaded from www.Manualslib.com manuals search engine

WIPER AND WASHER SYSTEM

BE118-04

PARTS LOCATION

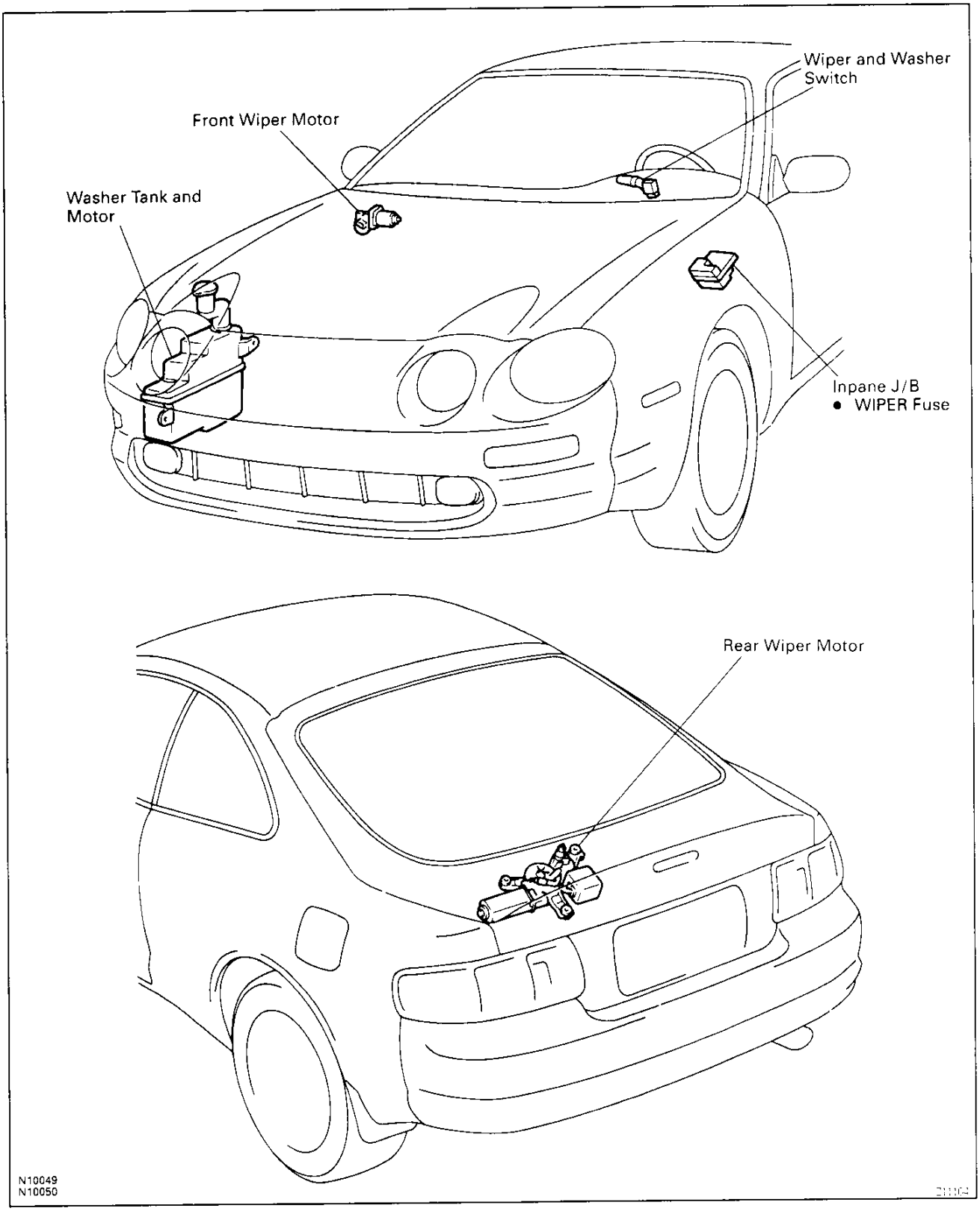

Downloaded from www.Manualslib.com manuals search engine

BEGA7-0A

TROUBLESHOOTING

The table below will be useful for you in troubleshooting these electrical problems. The most likely causes of the malfunction are shown in the order of their probability. Inspect each part in the order shown, and replace the part when it is found to be faulty.

Trouble	Parts name	(See page)
Wipers and washers do not operate.	1. ALT Fuse	(BE–15)
	2. AM1 Fuse	(BE–14)
	3. WIPER Fuse	(BE–14)
	4. Ignition Switch	(BE–18)
	5. Wiper and Washer Switch	(BE–49)
	6. Wire Harness	
Front wiper does not operate.	1. Front Wiper and Washer Switch	(BE–49)
	2. Front Wiper Motor	(BE–52)
	3. Wire Harness	
Rear wiper does not operate.	1. Rear Wiper and Washer Switch	(BE–50)
	2. Rear Wiper Motor and Relay	(BE–53)
	3. Wire Harness	
Front washer does not operate.	1. Front Wiper and Washer Switch	(BE–49)
	2. Washer Motor	(BE–54)
	3. Wire Harness	
Rear washer does not operate.	1. Rear Wiper and Washer Switch	(BE–50)
	2. Washer Motor	(BE–54)
	3. Wire Harness	

Downloaded from www.Manualslib.com manuals search engine

BE22Y-01

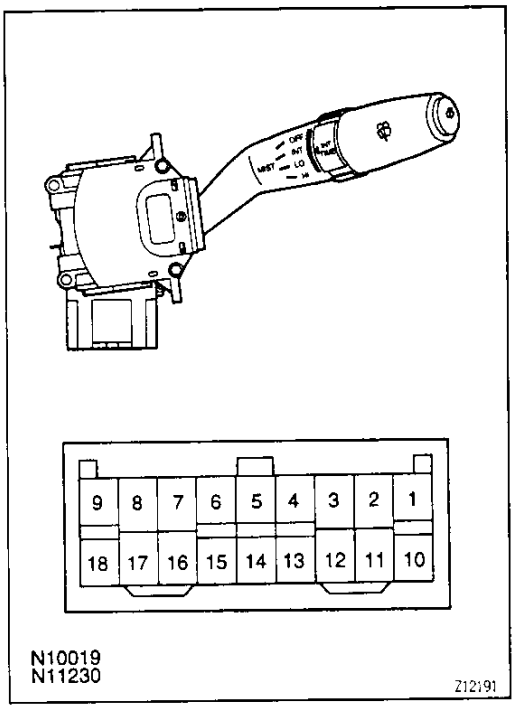

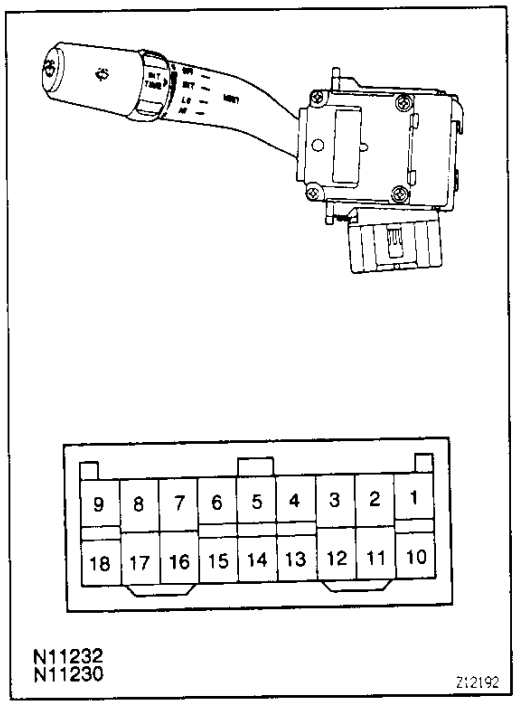

WIPER AND WASHER SWITCH INSPECTION

1. INSPECT FRONT WIPER AND WASHER SWITCH CONTINUITY

LHD Models:

Inspect the switch continuity between terminals.

Switch position	Tester connection to terminal number	Specified value
Wiper OFF	7 – 16	Continuity
Wiper OFF and MIST	7 – 17	Continuity
Wiper INT	7 – 16	Continuity
Wiper INT and MIST	7 – 17	Continuity
Wiper LO	7 – 17	Continuity
Wiper LO and MIST	7 – 17	Continuity
Wiper HI	8 – 17	Continuity
Wiper HI and MIST	7 – 8 – 17	Continuity
Washer ON	2 – 11	Continuity

If continuity is not as specified, replace the switch.

2. INSPECT FRONT WIPER AND WASHER SWITCH CONTINUITY

RHD Models:

Inspect the switch continuity between terminals.

Switch position	Tester connection to terminal number	Specified value
Wiper OFF	3 – 12	Continuity
Wiper OFF and MIST	3 – 11	Continuity
Wiper INT	3 – 12	Continuity
Wiper INT and MIST	3 – 11	Continuity
Wiper LO	3 – 11	Continuity
Wiper LO and MIST	3 – 11	Continuity
Wiper HI	2 – 11	Continuity
Wiper HI and MIST	2 – 3 – 11	Continuity
Washer ON	8 – 17	Continuity

If continuity is not as specified, replace the switch.

BE

Downloaded from www.Manualslib.com manuals search engine

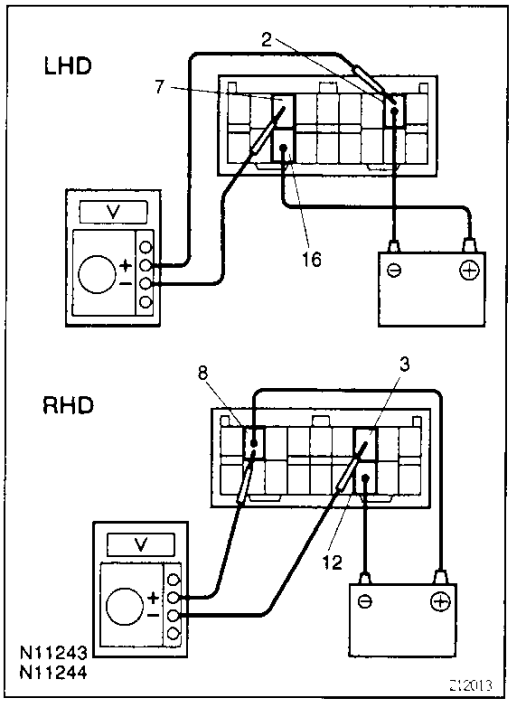

3. INSPECT INTERMITTENT OPERATION

(a) Turn the wiper switch to INT position.

(b) Turn the intermittent time control switch to FAST position.

(c) Connect the positive (+) lead from the battery to terminal 16(12) and the negative (−) lead to terminal 2(8).

(d) Connect the positive (+) lead from the voltmeter to terminal 7(3) and the negative (−) lead to terminal 2 (8), check that the meter needle indicates battery voltage.

( ): **RHD Models**

INT time control switch position	Voltage
FAST	Approx. 1–3 sec. Battery voltage 0 volt
SLOW	Approx. 10–15 sec. Battery voltage 0 volt

V04134

BE

If operation is not as specified, replace the wiper and washer switch.

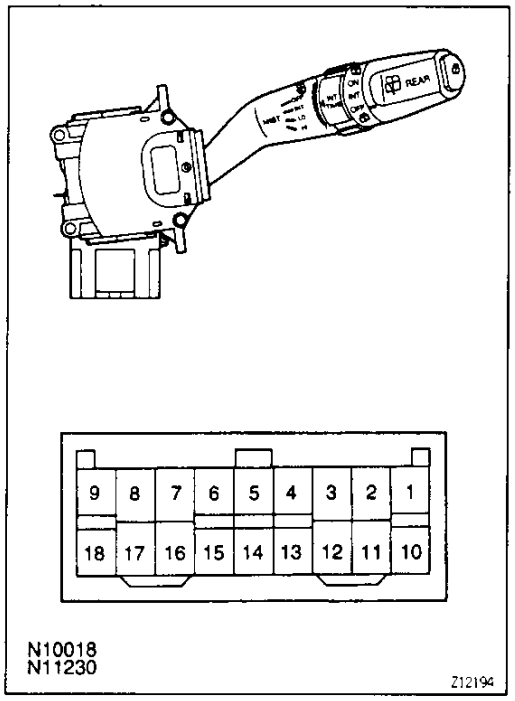

4. INSPECT REAR WIPER AND WASHER SWITCH CONTINUITY

LHD Models:

Inspect the switch continuity between terminals.

Switch position	Tester connection to terminal number	Specified value
Wiper OFF	—	No continuity
Wiper INT	2 — 13	Continuity
Wiper ON	2 — 10	Continuity
Washer ON	2 — 12	Continuity

If continuity is not as specified, replace the switch.

Downloaded from www.Manualslib.com manuals search engine

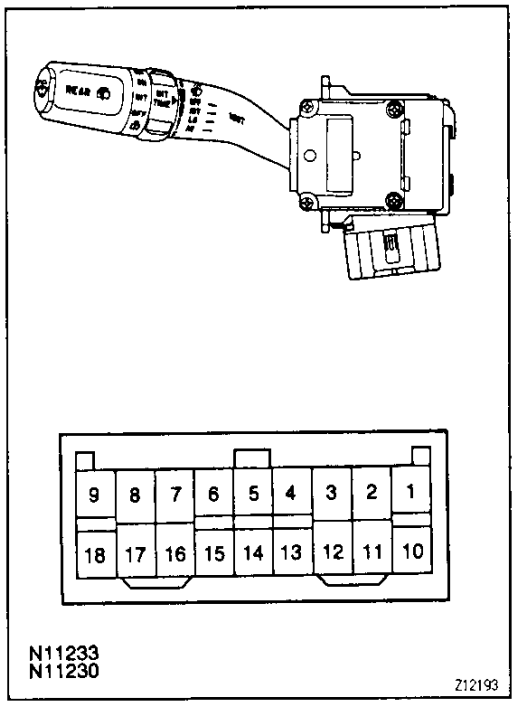

5. INSPECT REAR WIPER AND WASHER SWITCH CONTINUITY

RHD Models:

Inspect the switch continuity between terminals.

Switch position	Tester connection to terminal number	Specified value
Wiper OFF	—	No continuity
Wiper INT	8 — 15	Continuity
Wiper ON	8 — 18	Continuity
Washer ON	8 — 16	Continuity

If continuity is not as specified, replace the switch.

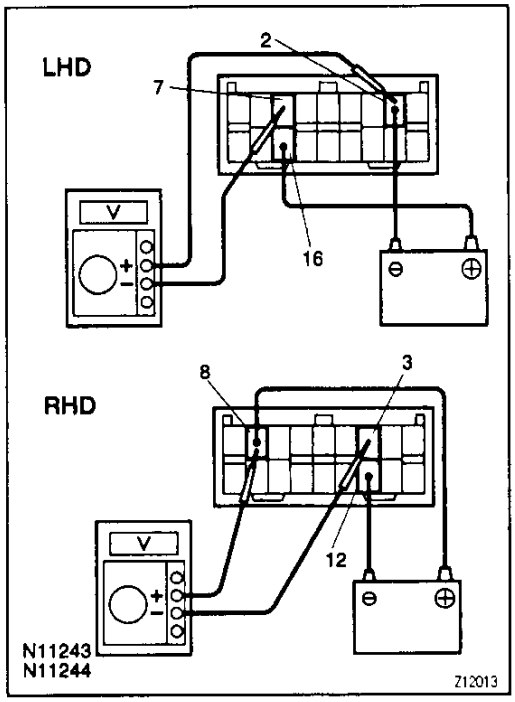

6. INSPECT WASHER LINKED OPERATION

(a) Connect the positive (+) lead from the battery to terminal 16(12) and the negative (−) lead to terminal 2(8).

(b) Connect the positive (+) lead from the voltmeter to terminal 7(3) and the negative (−) lead to terminal 2 (8).

(c) Push in the washer switch, check that the voltage changes as shown in the table.

( ): RHD Models

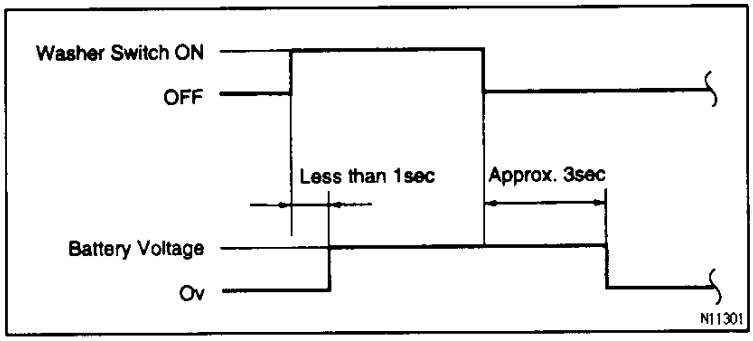

If operation is not as specified, replace the wiper and washer switch.

BE

Downloaded from www.Manualslib.com manuals search engine

BE1DF-03

WIPER MOTOR INSPECTION

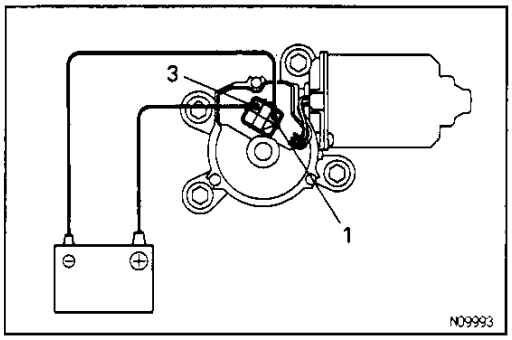

1. **INSPECT FRONT WIPER MOTOR**

Low Speed Operation:

Connect the positive (+) lead from the battery to terminal 3 and the negative (−) lead to terminal 1, check that the motor operates at low speed.
If operation is not as specified, replace the motor.

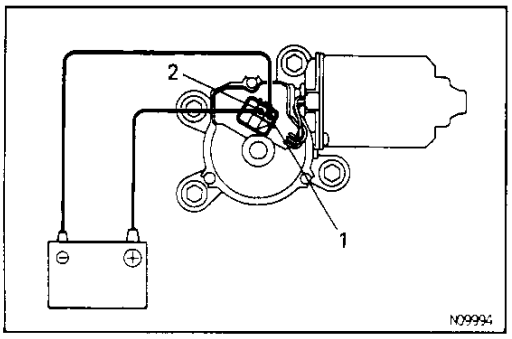

High Speed Operation:

Connect the positive (+) lead from the battery to terminal 2 and the negative (−) lead to terminal 1, check that the motor operates at high speed.
If operation is not as specified, replace the motor.

BE

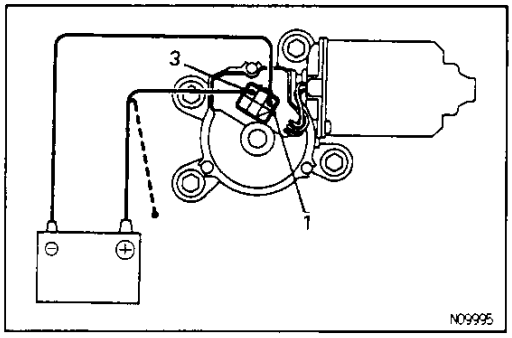

Stopping at Stop Position Operation:

(a) Operate the motor at low speed and stop the motor operation anywhere by disconnecting positive (+) lead from terminal 3.

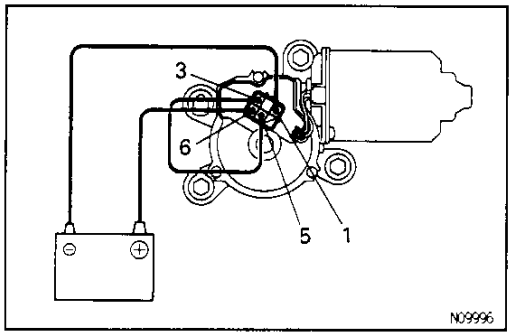

(b) Connect terminals 3 and 5.

(c) Connect the positive (+) lead from the battery to terminal 6 and negative (−) lead to terminal 1, check that the motor stops running at the stop position after the motor operates again.
If operation is not as specified, replace the motor.

Downloaded from www.Manualslib.com manuals search engine

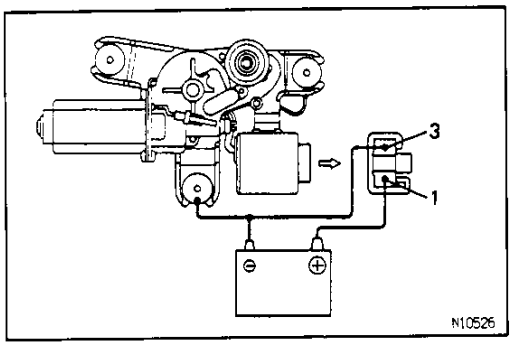

2. INSPECT REAR WIPER MOTOR AND RELAY OPERATION

(a) Connect the positive (+) lead from the battery to terminal 1, and the negative (−) lead to terminal 3 and the motor body, check that the motor operates.

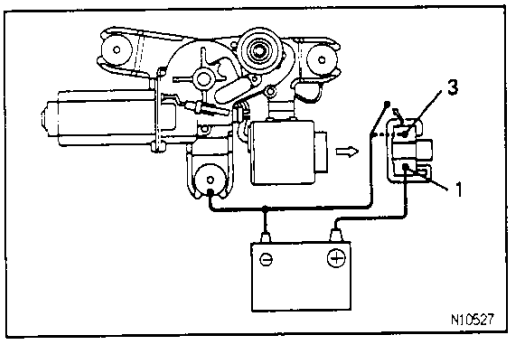

(b) Disconnect the negative (−) lead from terminal 3, check that the motor stops running at the stop position.
If operation is not as specified, replace the motor and relay.

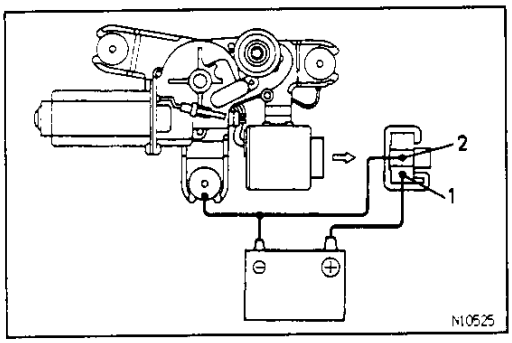

Intermittent Operation:
Connect the positive (+) lead from the battery to terminal 1, and the negative (−) lead to terminal 2 and the motor body, check that the motor operates intermittently for 9 — 15 seconds.
If operation is not as specified, replace the motor and relay.

BE

Downloaded from www.Manualslib.com manuals search engine

BE1YP-02

WASHER MOTOR INSPECTION

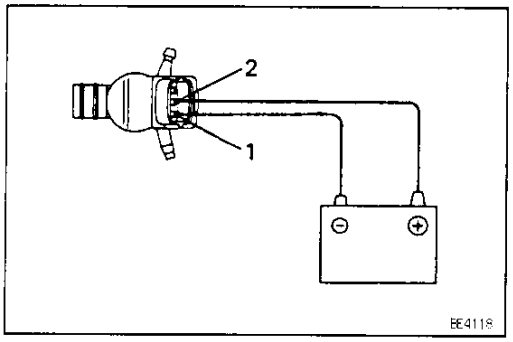

INSPECT WASHER MOTOR (W/ Rear Wiper)

Front Washer Operation

Connect the positive (+) lead from the battery to terminal 2 and the negative (−) lead to terminal 1, check that the motor operates.

NOTICE: These tests must be performed quickly (within 20 seconds) to prevent the coil from burning out.

If operation is not as specified, replace the motor.

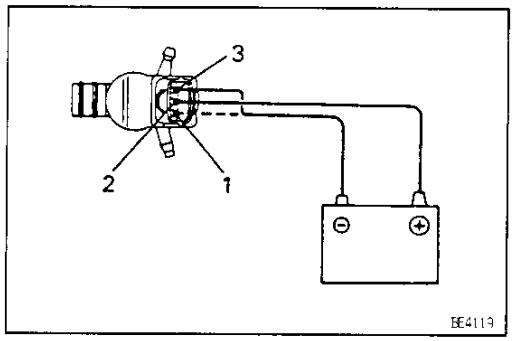

Rear Washer Operation

Connect the positive (+) lead from the battery to terminal 2 and the negative (−) lead to terminal 3, check that the motor operates.

NOTICE: These tests must be performed quickly (within 20 seconds) to prevent the coil from burning out.

If operation is not as specified, replace the motor.

BE

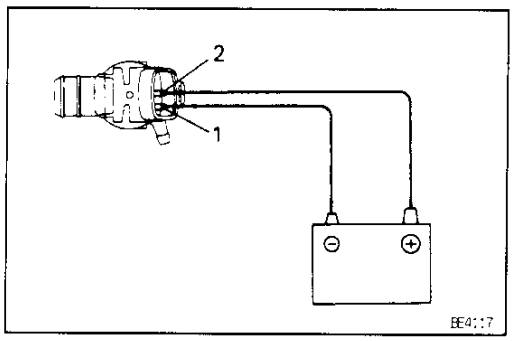

INSPECT WASHER MOTOR (W/O Rear Wiper)

Operation

Connect the positive (+) lead from the battery to terminal 2 and the negative (−) lead to terminal 1, check that the motor operates.

NOTICE: These tests must be performed quickly (within 20 seconds) to prevent the coil from burning out.

If operation is not as specified, replace the motor.

Downloaded from www.Manualslib.com manuals search engine

COMBINATION METER
PARTS LOCATION

BE1DK-08

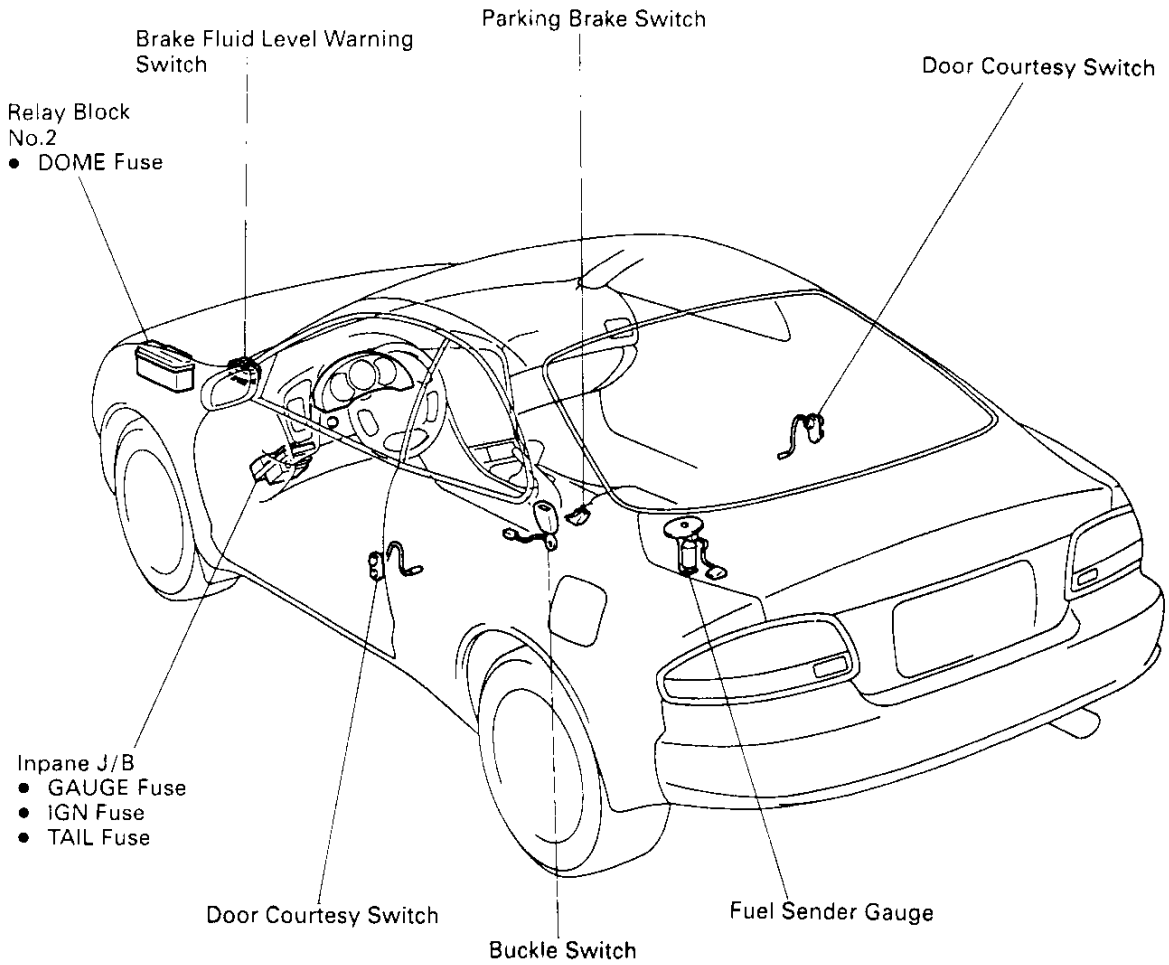

N10043

BE

Downloaded from www.Manualslib.com manuals search engine

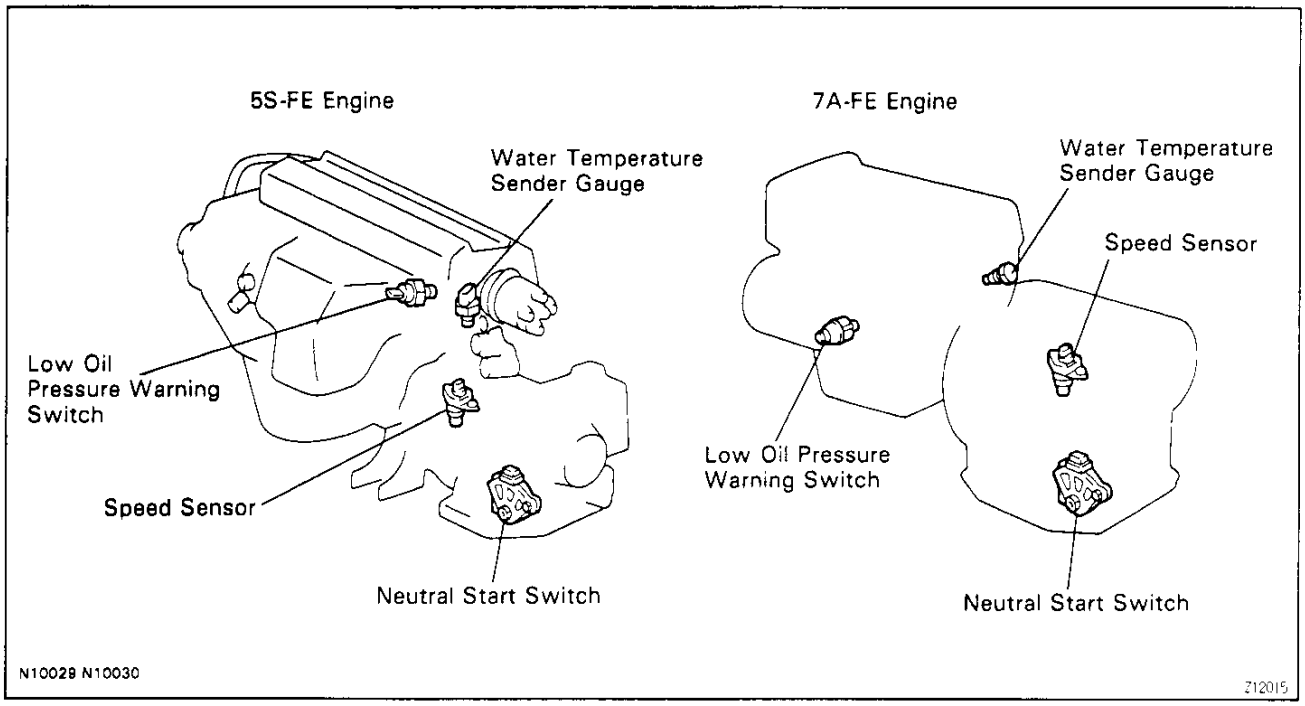

BE

Downloaded from www.Manualslib.com manuals search engine

BE33L-01

METER CIRCUIT

Europe

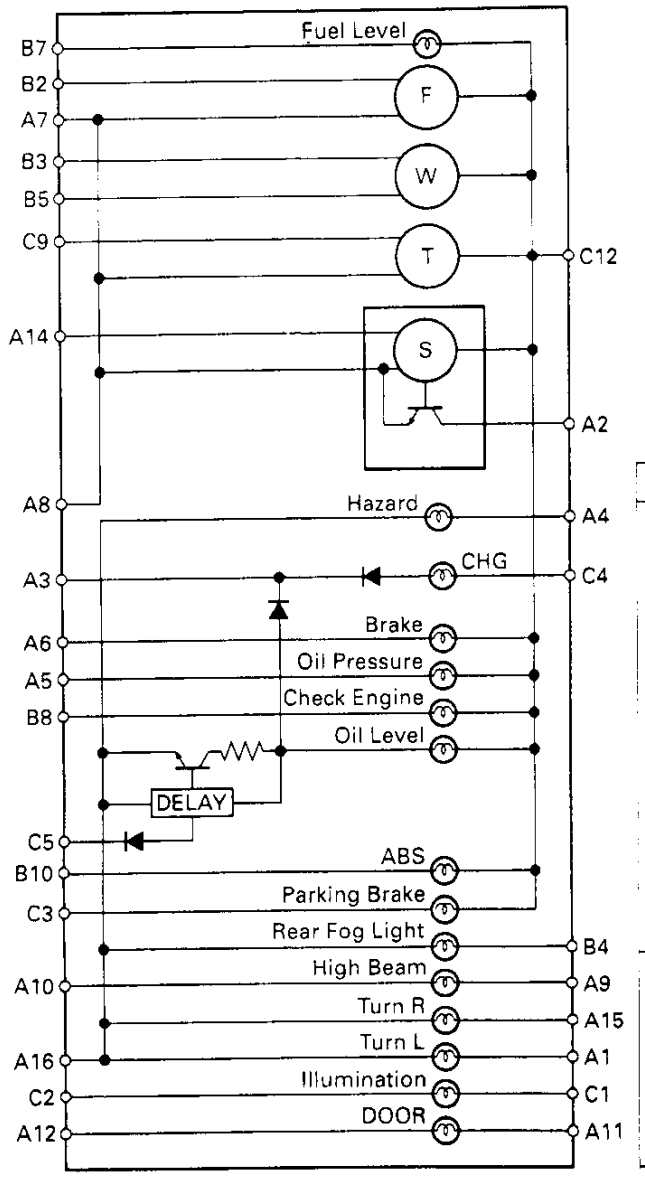

Ⓕ : Fuel Receiver Gauge
Ⓦ : Water Temperature Receiver Gauge
Ⓣ : Tachometer
Ⓢ : Speedometer

j-16-1
j-10-1
N11146 j-13-1-A

Connector "A"

Connector "B"

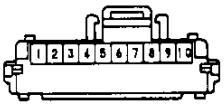

Connector "C"

No.		Wiring Connector Side
A	1	Turn Signal Switch
	2	Engine ECU
	3	Alternator
	4	Hazard Switch
	5	Low Oil Pressure Warning Switch
	6	Brake Fluid Level Warning Switch
	7	Ground
	8	Ground
	9	HEAD Fuse
	10	Headlight Dimmer Switch
	11	DOME Fuse
	12	Door Courtesy Switch
	14	Speed Sensor
	15	Turn Signal Switch
	16	Ground
B	2	Fuel Sender Gauge
	3	Water Temperature Sender Gauge
	4	Rear Fog Light Relay
	5	Ground
	7	Fuel Sender Gauge
	8	Engine ECU
	10	ABS ECU
C	1	Taillight Control Relay
	2	Light Control Rheostat
	3	Parking Brake Switch
	4	IGN Fuse
	5	Engine Oil Level Sensor
	9	Ignition or IIA
	12	GAUGE Fuse

BE

V05226

Downloaded from www.Manualslib.com manuals search engine

General

Connector "A"

Connector "B"

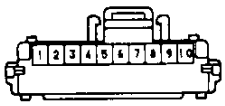

Connector "C"

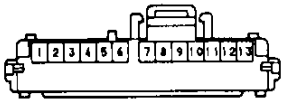

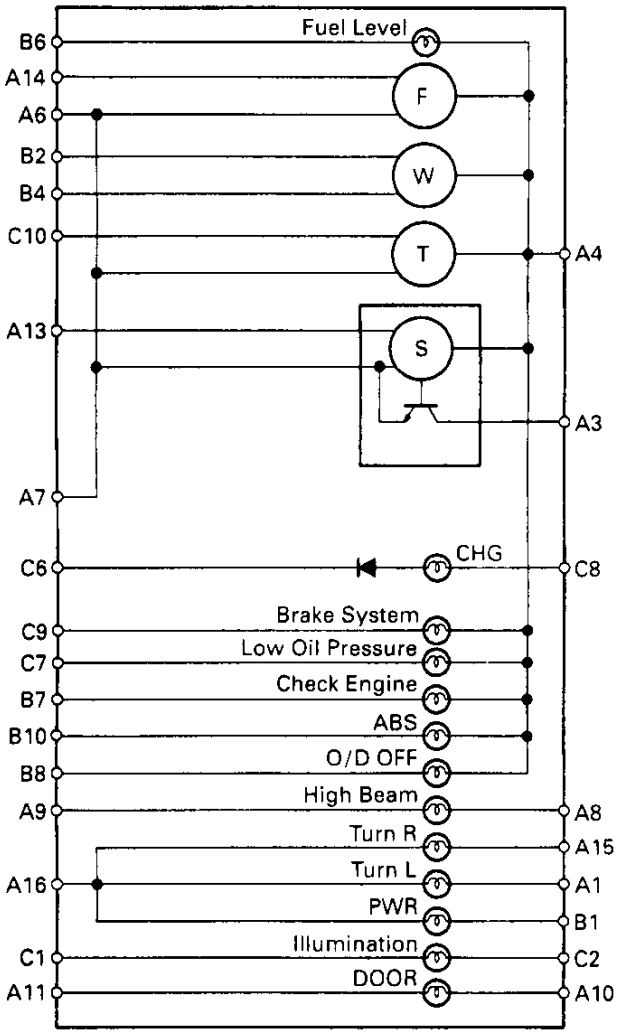

Ⓕ : Fuel Receiver Gauge
Ⓦ : Water Temperature Receiver Gauge
Ⓣ : Tachometer
Ⓢ : Speedometer

j-16-1 j-10-1 j-13-1-A
N11147

No.		Wiring Connector Side
A	1	Turn Signal Switch
	3	Engine ECU
	4	GAUGE Fuse
	6	Ground
	7	Ground
	8	HEAD Fuse
	9	Headlight Dimmer Switch
	10	DOME Fuse
	11	Door Courtesy Switch
	13	Speed Sensor
	14	Fuel Sender Gauge
	15	Turn Signal Switch
	16	Ground
B	1	Engine and ECT ECU
	2	Water Temperature Sender Gauge
	4	Ground
	6	Fuel Sender Gauge
	7	Engine ECU
	8	O/D OFF Switch
	10	ABS ECU
C	1	Light Control Rheostat
	2	Taillight Control Relay
	6	Alternator
	7	Low Oil Pressure Warning Switch
	8	IGN Fuse
	9	Brake Fluid Level Warning Switch and Parking Brake Switch
	10	Igniter or IIA

V05227

Downloaded from www.Manualslib.com manuals search engine

Saudi Arabia

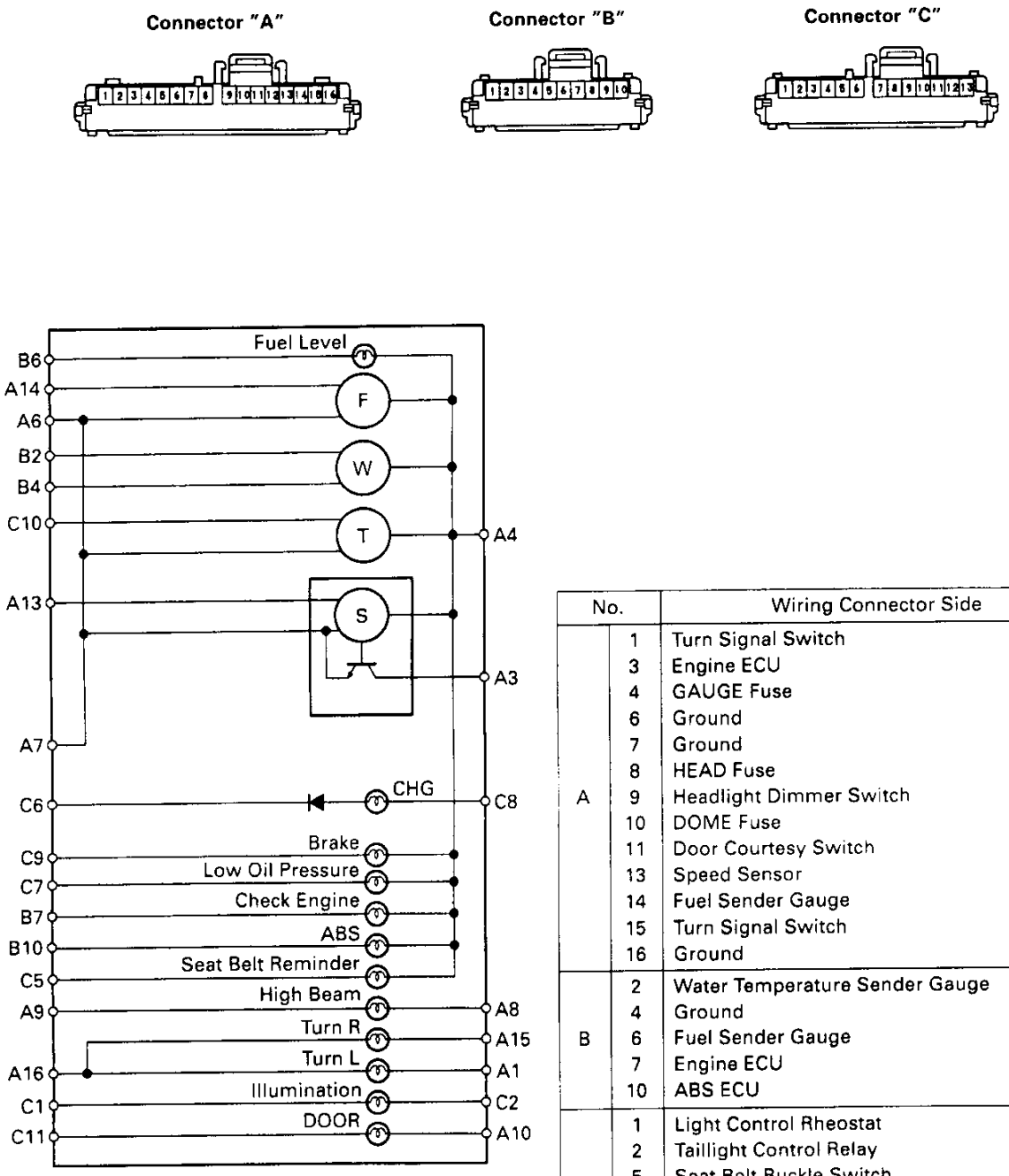

No.		Wiring Connector Side
A	1	Turn Signal Switch
	3	Engine ECU
	4	GAUGE Fuse
	6	Ground
	7	Ground
	8	HEAD Fuse
	9	Headlight Dimmer Switch
	10	DOME Fuse
	11	Door Courtesy Switch
	13	Speed Sensor
	14	Fuel Sender Gauge
	15	Turn Signal Switch
	16	Ground
B	2	Water Temperature Sender Gauge
	4	Ground
	6	Fuel Sender Gauge
	7	Engine ECU
	10	ABS ECU
C	1	Light Control Rheostat
	2	Taillight Control Relay
	5	Seat Belt Buckle Switch
	6	Alternator
	7	Low Oil Pressure Warning Switch
	8	IGN Fuse
	9	Brake Fluid Level Warning Switch and Parking Brake Switch
	10	Igniter or IIA

V05228

BE

Downloaded from www.Manualslib.com manuals search engine

Australia

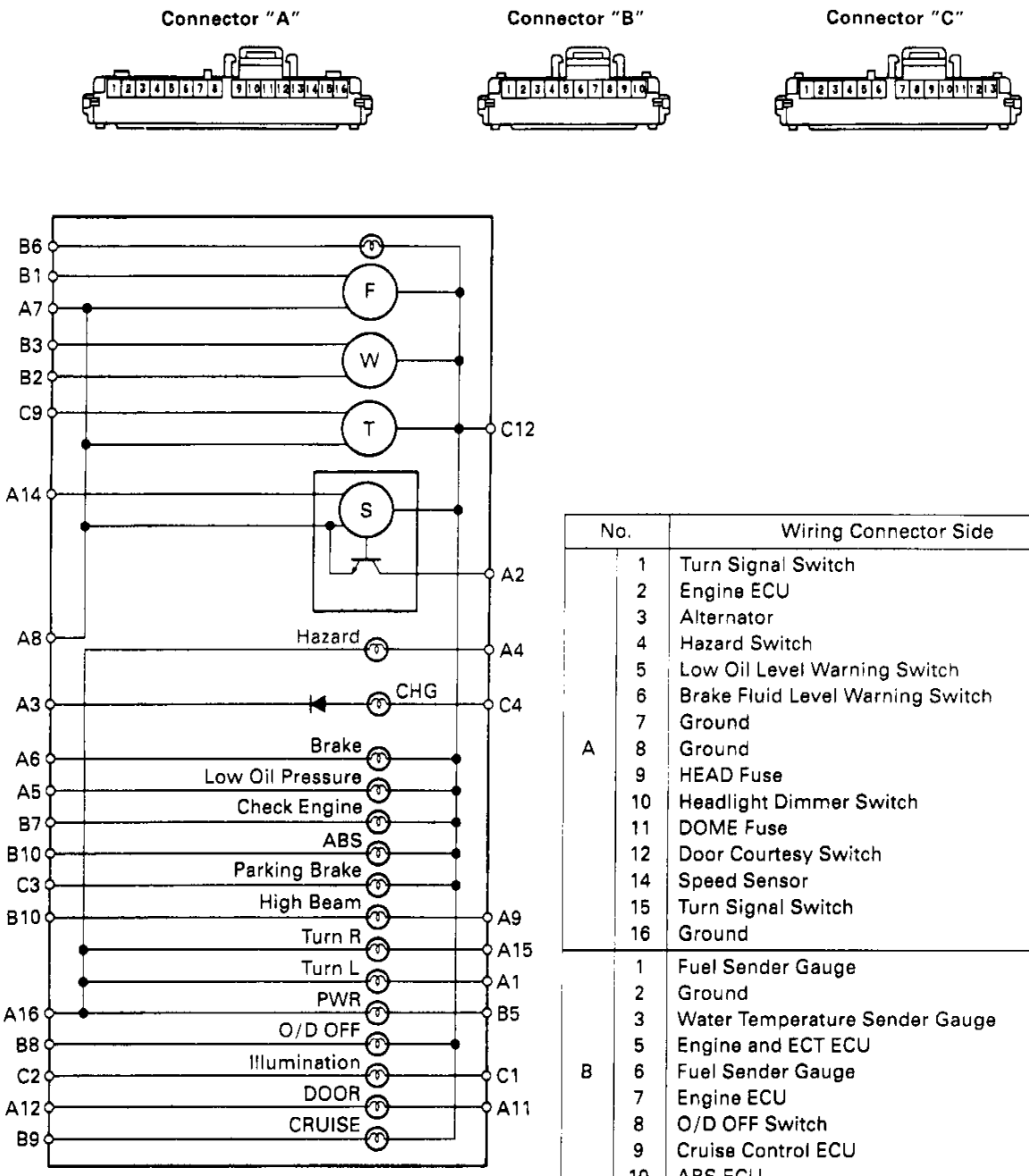

No.		Wiring Connector Side
A	1	Turn Signal Switch
	2	Engine ECU
	3	Alternator
	4	Hazard Switch
	5	Low Oil Level Warning Switch
	6	Brake Fluid Level Warning Switch
	7	Ground
	8	Ground
	9	HEAD Fuse
	10	Headlight Dimmer Switch
	11	DOME Fuse
	12	Door Courtesy Switch
	14	Speed Sensor
	15	Turn Signal Switch
	16	Ground
B	1	Fuel Sender Gauge
	2	Ground
	3	Water Temperature Sender Gauge
	5	Engine and ECT ECU
	6	Fuel Sender Gauge
	7	Engine ECU
	8	O/D OFF Switch
	9	Cruise Control ECU
	10	ABS ECU
C	1	Taillight Control Relay
	2	Light Control Rheostat
	3	Parking Brake Switch
	4	IGN Fuse
	9	Igniter or IIA
	12	GAUGE Fuse

V05229

Downloaded from www.Manualslib.com manuals search engine

TROUBLESHOOTING

The table below will be useful for you in troubleshooting these electrical problems. The most likely causes of the malfunction are shown in the order of their probability. Inspect each part in the order shown, and replace the part when it is found to be faulty.

METER, GAUGES AND ILLUMINATION

Trouble	Parts name	See page
Tachometer, Fuel Gauge and Water Temperature Gauge do not operate	1. GAUGE Fuse 2. Meter Circuit Plate 3. Wire Harness	(BE−14) (BE−57)
Speedometer does not operate	1. Speed Sensor 2. Meter Circuit Plate 3. Wire Harness	(BE−65) (BE−57)
Tachometer does not operate	1. Igniter (5S − FE) or IIA (7A − FE) 2. A/T: Engine and ECT ECU M/T: Engine ECU 3. Meter Circuit Plate 4. Wire Harness	 (BE−57)
Fuel Gauge does not operate or abnormal operation	1. Fuel Receiver Gauge 2. Fuel Sender Gauge 3. Meter Circuit Plate 4. Wire Harness	(BE−66) (BE−66) (BE−57)
Water Temperature Gauge does not operate or abnormal operation	1. Water Temperature Receiver Gauge 2. Water Temperature Sender Gauge 3. Meter Circuit Plate 4. Wire Harness	(BE−68) (BE−69) (BE−57)
All illumination lights do not light up	1. TAIL Fuse 2. Light Control Rheostat 3. Meter Circuit Plate 4. Wire Harness	(BE−14) (BE−71) (BE−57)
Only one illumination light does not light up	1. Bulb 2. Meter Circuit Plate	 (BE−57)

BE

Downloaded from www.Manualslib.com manuals search engine

WARNING LIGHTS

Trouble	Parts name	See page
Warning light do not light up (Except Discharge and Door Open)	1. Bulb	
	2. IGN Fuse	(BE–14)
	3. Ignition Switch	(BE–18)
	4. Meter Circuit Plate	(BE–57)
	5. Wire Harness	
	6. Alternator	
Brake Warning Light does not light up	1. Bulb	
	2. Brake Fluid Level Warning Switch	(BE–70)
	3. Parking Brake Switch	(BE–70)
	4. Bulb Check Relay	
	5. Meter Circuit Plate	(BE–57)
	6. Wire Harness	
Seat Belt Warning Light does not light up	1. Bulb	
	2. Seat Belt Buckle Switch	
	3. Integration Relay	(BE–72)
	4. Meter Circuit Plate	(BE–57)
	5. Wire Harness	
Low Oil Pressure Warning Light does not light up	1. Bulb	
	2. Low Oil Pressure Warning Switch	(BE–69)
	3. Meter Circuit Plate	(BE–57)
	4. Wire Harness	
Door Open Warning Light does not light up	1. Bulb	
	2. DOME Fuse	(BE–15)
	3. Door Courtesy Switch	(BE–71)
	4. Luggage Room Light Switch	
	5. Integration Relay	(BE–72)
	6. Meter Circuit Plate	(BE–57)
	7. Wire Harness	

Downloaded from www.Manualslib.com manuals search engine

INDICATOR LIGHTS

Trouble	Parts name	See page
ABS Indicator Light does not light up	1. Bulb 2. Wire Harness	
Check Engine Warning Light does not light up	1. Bulb 2. Engine ECM 3. Wire Harness	
PWR Indicator Light does not light up.	1. Bulb 2. Engine and ECT ECU 3. Wire Harness	– AX Section –
O/D OFF Indicator Light does not light up	1. Bulb 2. O/D Main Switch 3. Engine ECM 4. Meter Circuit Plate 5. Wire Harness	 (BE–57)
Turn Indicator Light does not light up	1. Bulb 2. Turn Signal and Hazard Warning System 3. Meter Circuit Plate 4. Wire Harness	 (BE–36) (BE–57)
High Beam Indicator Light does not light up	1. Bulb 2. Headlight System 3. Meter Circuit Plate 4. Wire Harness	 (BE–19) (BE–57)
CRUISE Indicator Light does not light up	1. Bulb 2. Cruise Control ECU 3. Meter Circuit Plate 4. Wire Harness	 (BE–118) (BE–57)

Downloaded from www.Manualslib.com manuals search engine

BE08Q-08

SPEEDOMETER INSPECTION

INSPECT SPEEDOMETER OPERATION ON VEHICLE

(a) Using a speedometer tester, inspect the speedometer for allowable indication error and check the operation of the odometer.
HINT: Tire wear and tire over or under inflation will increase the indication error.
If error is excessive, replace the speedometer.

(b) Check the speedometer for pointer vibration and abnormal noise.

EUROPE

Standard indication (km/h)	Allowable range (km/h)	Standard indication (mph)	Allowable range (mph)
20	20 – 26	20	20 – 24.5
40	40 – 48	40	40 – 46.5
60	60 – 70	60	60 – 68.5
80	80 – 92	80	80 – 90.5
100	100 – 114	100	100 – 112.5
120	120 – 136	–	
140	140 – 158	–	
160	160 – 180	–	

BE

GENERAL

Standard indication (km/h)	Allowable range (km/h)	Standard indication (mph)	Allowable range (mph)
20	17 – 27	20	18 – 24
40	38 – 46	40	38 – 44
60	57.5 – 67	60	58 – 66
80	77 – 88	80	78 – 88
100	96 – 109	100	98 – 110
120	115 – 130	120	118 – 132
140	134 – 151.5	–	
160	153 – 173	–	

AUSTRALIA

Standard indication (km/h)	Allowable range (km/h)
40	36 – 44
60	54 – 66
80	72 – 88
100	90 – 110
120	108 – 132
140	126 – 154
160	144 – 176

Downloaded from www.Manualslib.com manuals search engine

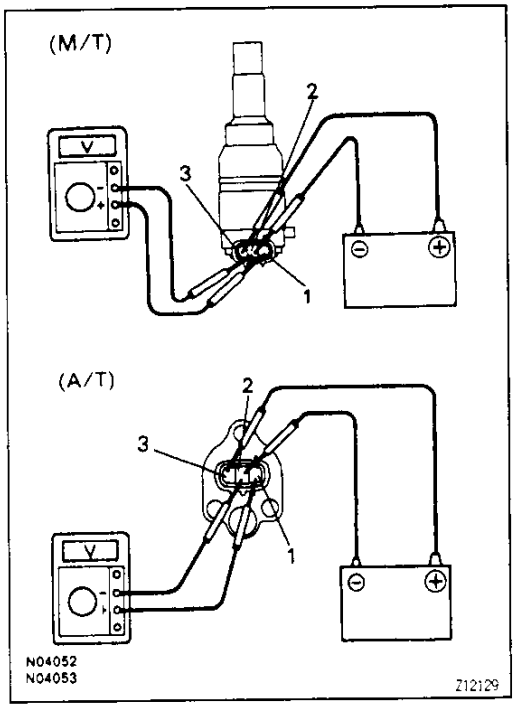

BE1DF-06

SPEED SENSOR INSPECTION

INSPECT SPEED SENSOR OPERATION

(a) Connect the positive (+) lead from battery to terminal 1 and negative (−) lead to terminal 2.

(b) Connect the positive (+) lead from tester to terminal 3 and negative (−) lead to terminal 2.

(c) Rotate shaft.

(d) Check that there is a voltage change from approx. 0 V to 11 V or more between terminals 2 and 3.
HINT: The voltage change should be 4 times for every revolution of the speed sensor shaft.
If operation is not as specified, replace the sensor.

BE08T-08

TACHOMETER INSPECTION

BE

INSPECT TACHOMETER ON–VEHICLE

(a) Connect a tune–up test tachometer, and start the engine.
NOTICE: Reversing the connection of the tachometer will damage the transistors and diodes inside.

(b) Compare the tester and tachometer indications.
If error is excessive, replace the tachometer.
DC 13.5 V, 25 °C (77°F)

Standard indication (rpm)	Allowable range (rpm)
700	630 – 770
1000	900 – 1100
2000	1850 – 2150
3000	2800 – 3200
4000	3800 – 4200
5000	4800 – 5200
6000	5750 – 6250
7000	6700 – 7300

Downloaded from www.Manualslib.com manuals search engine

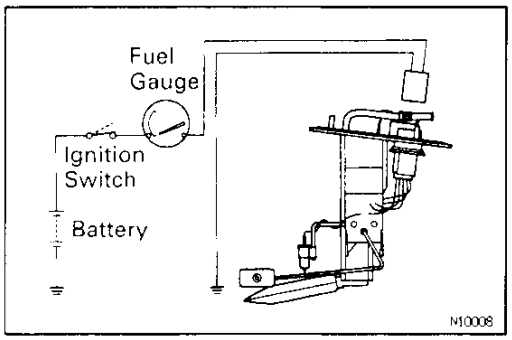

FUEL RECEIVER GAUGE INSPECTION

BE0BW-0B

1. INSPECT FUEL RECEIVER GAUGE OPERATION

(a) Disconnect the connector from the sender gauge assembly.

(b) Turn the ignition switch ON, check that the receiver gauge needle indicates EMPTY.

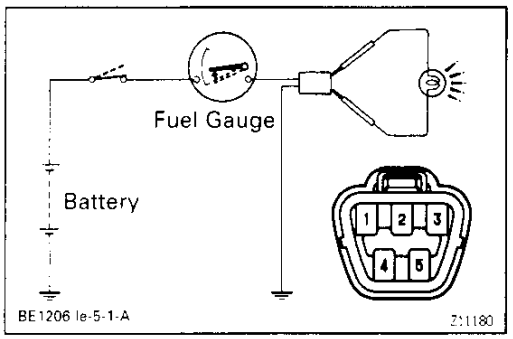

(c) Connect terminals 2 and 3 on the wire harness side connector through a 3.4 W test bulb.

(d) Turn the ignition switch ON, check that the bulb lights up and receiver gauge needle moves toward the full side.

HINT: Because of the silicon oil in the gauge, it will take a short time for the needle to stabilize.

If operation is not as specified, inspect the receiver gauge resistance.

BE

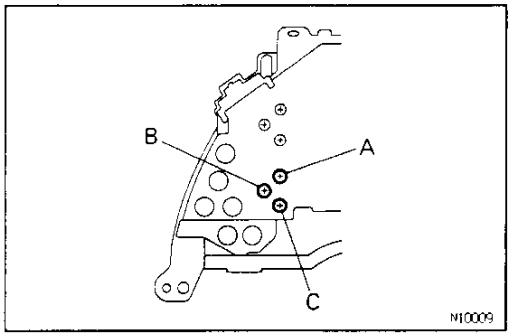

2. INSPECT FUEL RECEIVER GAUGE RESISTANCE

Measure the resistance between terminals.

Between terminals	Resistance (Ω)
A – B	Approx. 154.3
A – C	Approx. 126.2
B – C	Approx. 280.5

If resistance value is not as specified, replace the fuel receiver gauge.

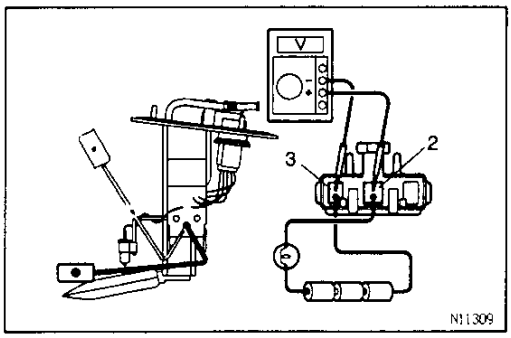

FUEL SENDER GAUGE INSPECTION

BE0BY-0C

1. INSPECT FUEL SENDER GAUGE OPERATION

(a) Connect a series of three 1.5 V dry cell batteries.

(b) Connect the positive (+) lead from the dry cell batteries to terminal 2 through a 3.4 W test bulb and the negative (−) lead to terminal 3.

(c) Check that the voltage rises between terminals 3 and 2 as the float is moved from the top to bottom position.

Downloaded from www.Manualslib.com manuals search engine

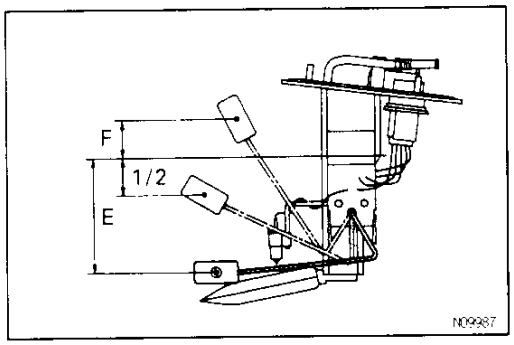

2. INSPECT FUEL SENDER GAUGE RESISTANCE

Measure the resistance between terminals 2 and 3 for each float position.

Float position mm (in.)		Resistance (Ω)
F	Approx. 27.6 (1.09)	Approx. 3.0
1/2	Approx. 33.7 (1.33)	Approx. 31.6
E	Approx. 92.7 (3.65)	Approx. 110.0

If resistance value is not as specified, replace the sender gauge.

BE0C0-08

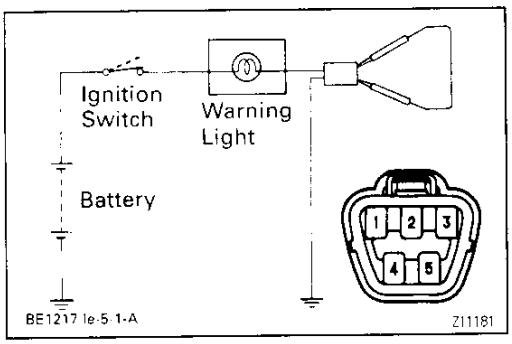

FUEL LEVEL WARNING LIGHT INSPECTION

INSPECT FUEL LEVEL WARNING LIGHT

(a) Disconnect the connector from the sender gauge.

(b) Connect terminals 1 and 3 on the wire harness side connector.

(c) Turn the ignition switch ON, check that the warning light lights up.
If the warning light does not light up, test the bulb or inspect wire harness.

BE

BE0BZ-08

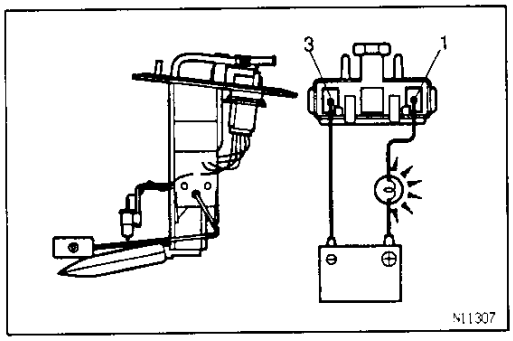

FUEL LEVEL WARNING SWITCH INSPECTION

INSPECT FUEL LEVEL WARNING SWITCH

(a) Apply battery voltage between terminals 1 and 3 through a 3.4 W test bulb, check that the bulb lights up.
HINT: It will take a short time for the bulb to light up.

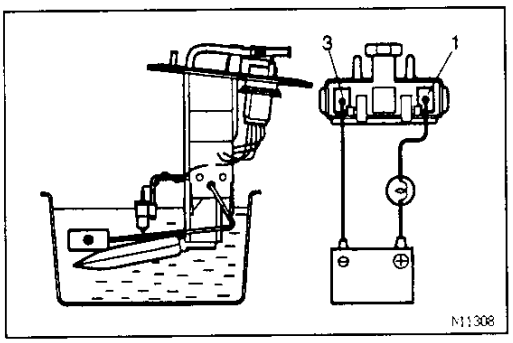

(b) Submerge the switch in fuel, check that the bulb goes out.
If operation is not as specified, replace the sender gauge.

Downloaded from www.Manualslib.com manuals search engine

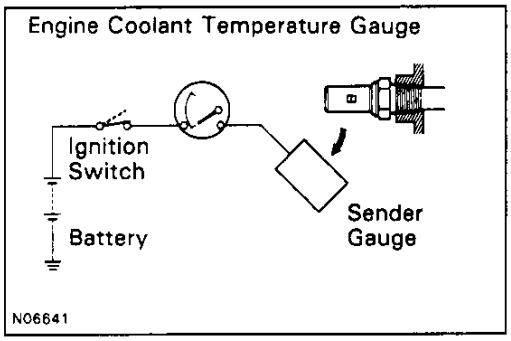

WATER TEMPERATURE RECEIVER GAUGE INSPECTION

BEOC1-0A

1. INSPECT WATER TEMPERATURE RECEIVER GAUGE OPERATION

(a) Disconnect the connector from the sender gauge.

(b) Turn the ignition switch ON, check that the receiver gauge needle indicates COOL.

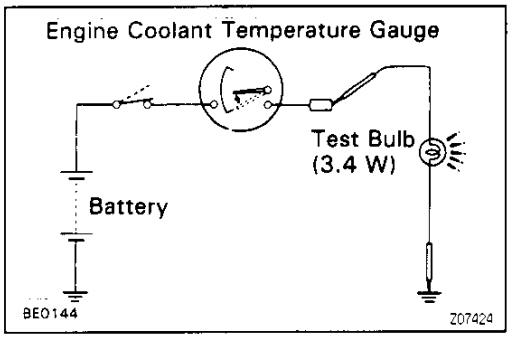

(c) Ground terminal on the wire harness side connector through a 3.4W test bulb.

(d) Turn the ignition switch ON, check that the bulb lights up and the receiver gauge needle moves toward the hot side.

If operation is not as specified, replace the sender gauge.

Then recheck the system.

If operation is not as specified, measure the receiver gauge resistance.

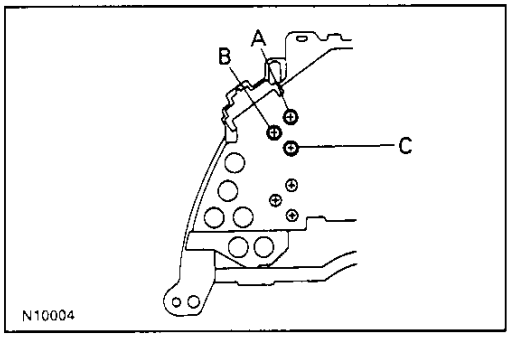

2. INSPECT WATER TEMPERATURE RECEIVER GAUGE RESISTANCE

Measure the resistance between terminals.

HINT: Connect the test leads so that the current from the ohmmeter can flow according to the chart order.

Between terminals	Resistance (Ω)
A – B	Approx. 229.7
A – C	Approx. 54.0
B – C	Approx. 175.7

If resistance value is not as specified, replace the engine coolant temperature receiver gauge.

BE

Downloaded from www.Manualslib.com manuals search engine

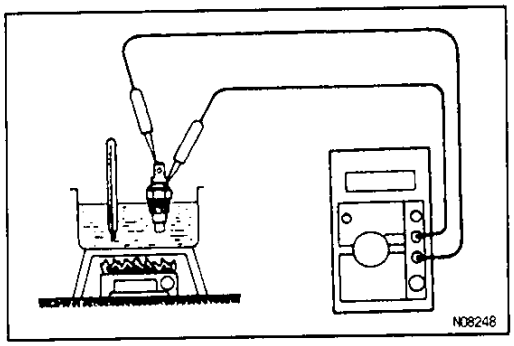

WATER TEMPERATURE SENDER GAUGE INSPECTION

BE11L-07

INSPECT WATER TEMPERATURE SENDER GAUGE

Measure the resistance between terminal and gauge body.

Temperature °C (°F)	Resistance (Ω)
50 (122.0)	160 ~ 240
120 (248.0)	17.1 ~ 21.2

If resistance value is not as specified, replace the engine coolant temperature sender gauge.

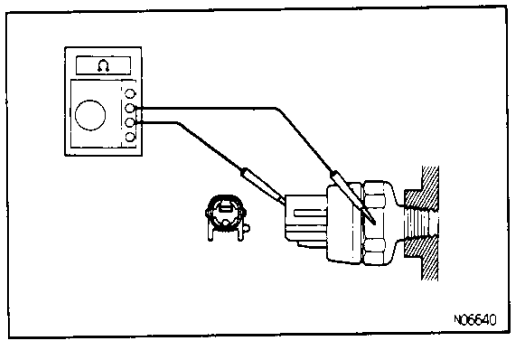

LOW OIL PRESSURE WARNING SWITCH INSPECTION

BE0C4-0A

BE

1. INSPECT LOW OIL PRESSURE WARNING SWITCH

(a) Check that there is continuity between terminal and ground with the engine stopped.

(b) Check that there is no continuity between terminal and ground with the engine running.
HINT: Oil pressure should be over 20 kPa (0.2 kgf/cm², 2.9 psi)
If operation is not as specified, replace the switch.

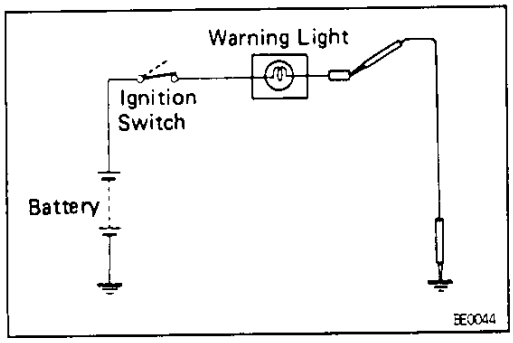

2. INSPECT LOW OIL PRESSURE WARNING LIGHT

(a) Disconnect the connector from the warning switch and ground terminal on the wire harness side connector.

(b) Turn the ignition switch ON, check that the warning light lights up.
If the warning light does not light up, test the bulb or inspect wire harness.

Downloaded from www.Manualslib.com manuals search engine

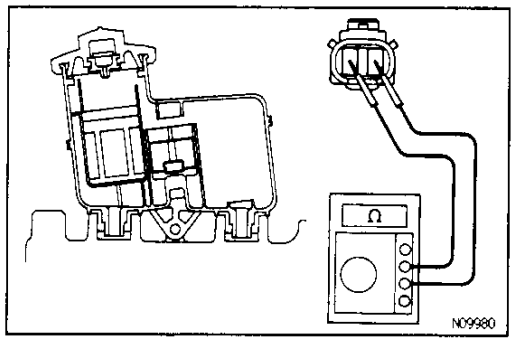

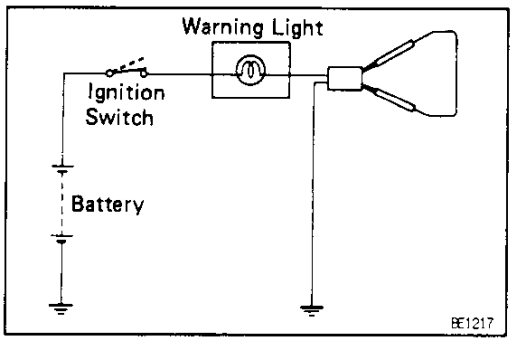

BRAKE FLUID LEVEL WARNING SWITCH INSPECTION

1. INSPECT BRAKE FLUID LEVEL WARNING SWITCH

(a) Remove the reservoir tank cap and strainer.

(b) Disconnect the connector.

(c) Check that there is no continuity between terminals with the switch OFF (float up).

(d) Use syphon, etc. to take fluid out of the reservoir tank.

(e) Check that there is continuity between terminals with the switch ON (float down).

(f) Pour the fluid back in the reservoir tank.
If operation is not as specified, replace the switch.

2. INSPECT BRAKE WARNING LIGHT

(a) Disconnect the connector from the brake fluid warning switch.

(b) Release the parking brake lever.

(c) Connect terminals on the wire harness side of the level warning switch connector.

(d) Start the engine, check that the warning light lights up.
If the warning light does not light up, test the bulb or wire harness.

BE

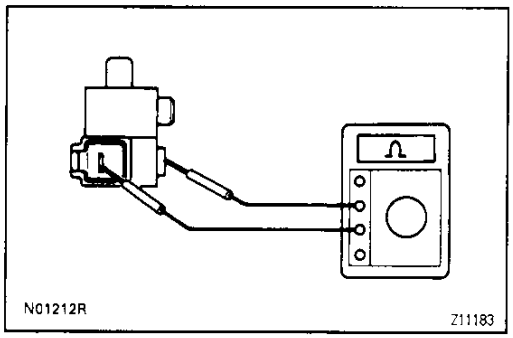

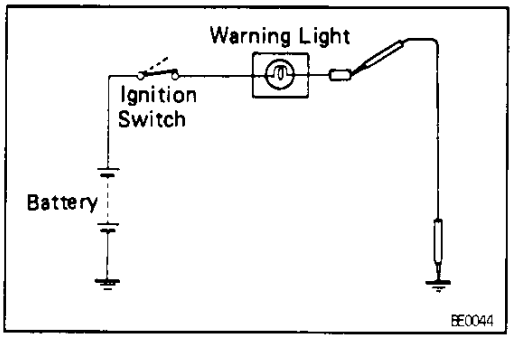

PARKING BRAKE SWITCH INSPECTION

1. INSPECT PARKING BRAKE SWITCH

(a) Check that there is continuity between terminal and switch body with the switch ON (switch pin released).

(b) Check that there is no continuity between terminal and switch body with the switch OFF (switch pin pushed in).
If operation is not as specified, replace the switch or inspect ground point.

2. INSPECT BRAKE WARNING LIGHT

(a) Disconnect the connector from the parking brake switch and the brake fluid warning switch.

(b) Ground terminal on the wire harness side connector.

(c) Start the engine, check that the warning light lights up.
If the warning light does not light up, test the bulb or inspect wire harness.

Downloaded from www.Manualslib.com manuals search engine

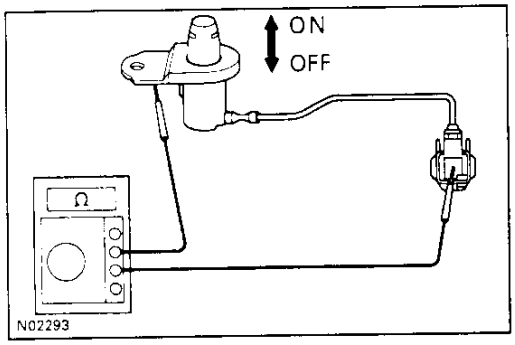

DOOR COURTESY SWITCH INSPECTION

BE11P-07

1. INSPECT DOOR COURTESY SWITCH

(a) Check that there is continuity between terminal and switch body with the switch ON (switch pin released).

(b) Check that there is no continuity between terminal and switch body with the switch OFF (switch pin pushed).

If continuity is not as specified, replace the switch.

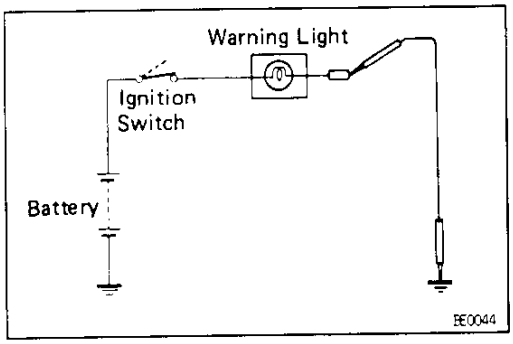

2. INSPECT OPEN DOOR WARNING LIGHT

Disconnect the connector from the door courtesy switch, and ground terminal 1 on the wire harness side connector and check that the warning light lights up.

If the warning light does not light up, inspect the bulb or wire harness.

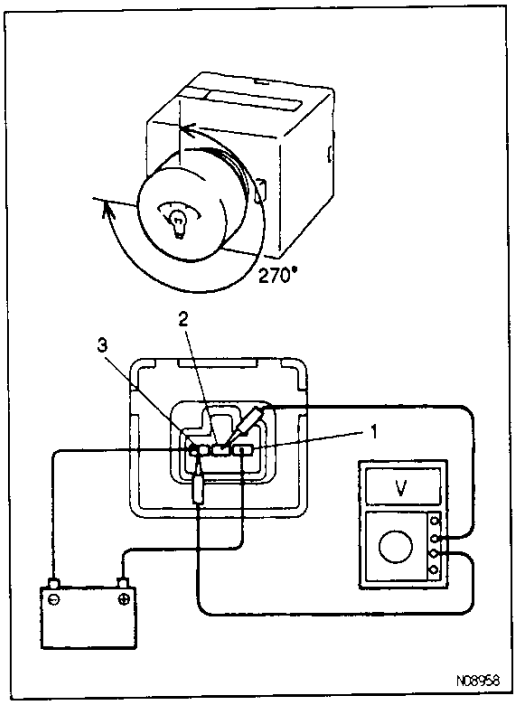

LIGHT CONTROL RHEOSTAT INSPECTION

BE1D8-03

BE

INSPECT LIGHT CONTROL RHEOSTAT

(a) Connect the positive (+) lead from the battery to terminal 1 and negative lead (−) to terminal 3.

(b) Connect the positive (+) lead from the voltmeter to terminal 2 and negative lead to terminal 3.

(c) Turn the rheostat knob and check that the voltage changes.

Downloaded from www.Manualslib.com manuals search engine

BE1YR-02

INTEGRATION RELAY INSPECTION

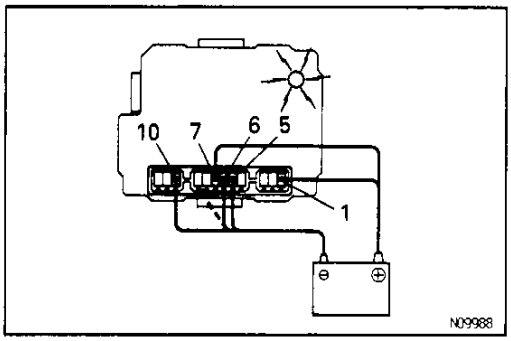

1. INSPECT UNLOCK WARNING OPERATION

(a) Connect the positive (+) lead from the battery to terminal 1 and 7, the negative lead to terminals 5 and 10.

(b) Check that the buzzer sounds when the negative (−) lead from the battery is connected to terminal 6.
If operation is not as specified, replace the relay.

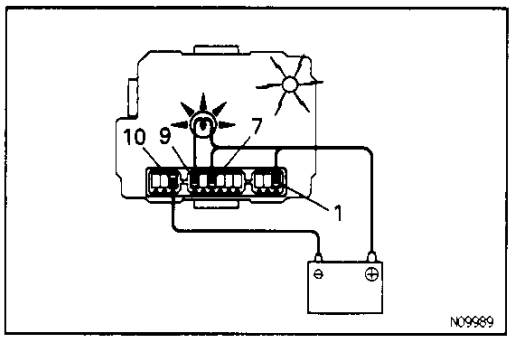

2. INSPECT SEAT BELT WARNING OPERATION

(a) Connect the positive (+) lead from the battery to terminals 1 and 7.

(b) Connect the positive (+) lead from the battery to terminal 9 through a 3.4W test bulb.

(c) Check that the test bulb lights up and buzzer sounds for 4 – 8 seconds when the negative (−) lead from the battery is connected to terminal 10.

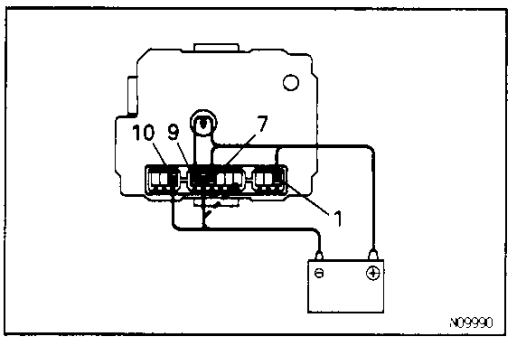

(d) Check that the buzzer sounding in (c) stops when the negative (−) lead from the battery is connected to terminal 8.
If operation is not as specified, replace the integration relay.

BE

Downloaded from www.Manualslib.com manuals search engine

DEFOGGER SYSTEM
PARTS LOCATION

BE134-07

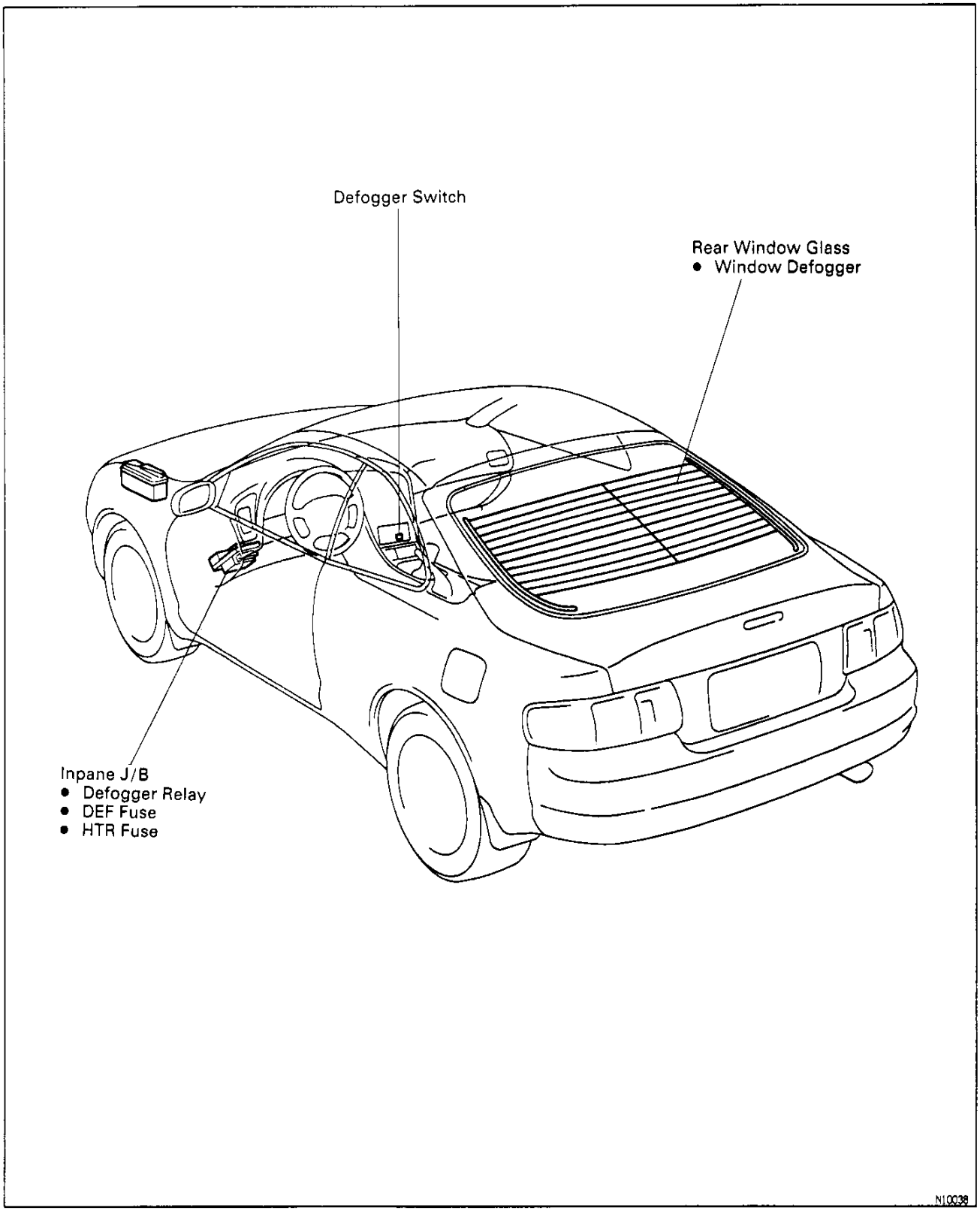

Downloaded from www.Manualslib.com manuals search engine

BE060-00

TROUBLESHOOTING

The table below will be useful for you in troubleshooting these electrical problems. The most likely causes of the malfunction are shown in the order of their probability. Inspect each part in the order shown, and replace the part when it is found to be faulty.

Trouble	Parts name	(See page)
All defogger systems do not operate	1. HTR Fuse	(BE−14)
	2. DEF Fuse	(BE−14)
	3. Defogger Relay	(BE−75)
	4. Defogger Switch	(BE−74)
	5. Wire Harness	
Rear window defogger does not operate	1. Defogger Wires	(BE−75)
	2. Wire Harness	

BE125-06

DEFOGGER SWITCH INSPECTION

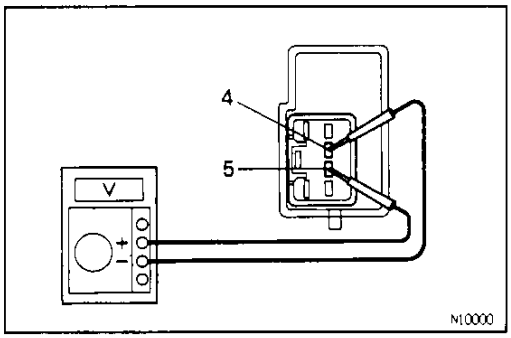

INSPECT DEFOGGER SWITCH

(a) Connect the positive (+) lead from the voltmeter to terminal 5 and the negative (−) lead from the voltmeter to terminal 4.

(b) When the switch is off, the voltage should be approx. 12 V.

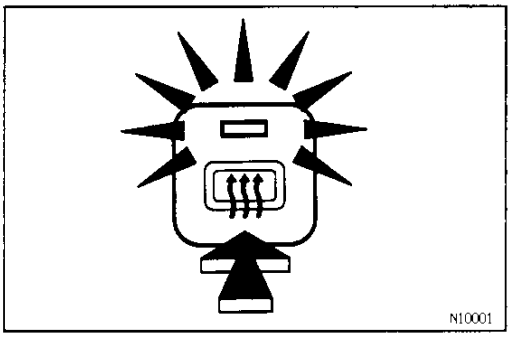

(c) When the switch is on, check that the indicator light lights up and that the voltage is less than 1 V.

(d) W/ Timer:
After 15 minutes, check that the switch is off and the voltage is approx. 12 V.

Downloaded from www.Manualslib.com manuals search engine

BE06T-03

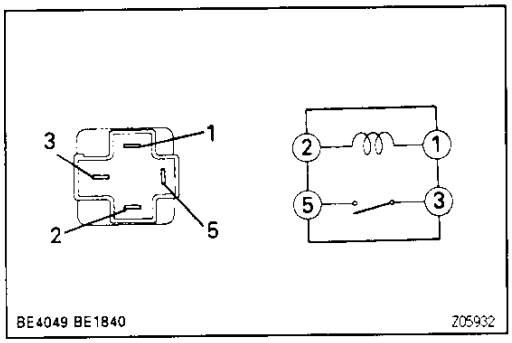

DEFOGGER RELAY INSPECTION

INSPECT DEFOGGER RELAY CONTINUITY

Condition	Tester connection to terminal number	Specified value
Constant	1 – 2	Continuity
Apply +B between terminals 1 and 2.	3 – 5	Continuity

If continuity is not as specified, replace the relay.

BE06U-04

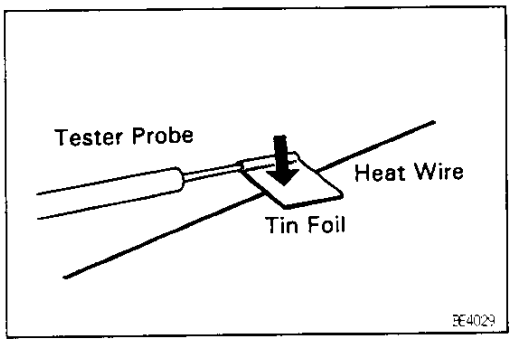

DEFOGGER WIRE INSPECTION

NOTICE:

- **When cleaning the glass, use a soft, dry cloth, and wipe the glass in the direction of the wire. Take care not to damage the wires.**
- **Do not use detergents or glass cleaners with abrasive ingredients.**
- **When measuring voltage, wind a piece of tin foil around the top of the negative probe and press the foil against the wire with your finger, as shown.**

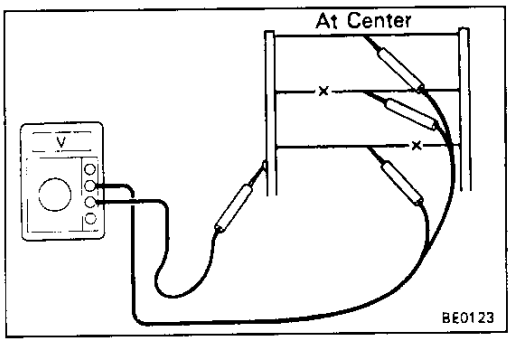

(a) Turn the ignition switch ON.
(b) Turn the defogger switch ON.
(c) Inspect the voltage at the center of each heat wire, as shown.

Voltage	Condition
Approx. 5V	Okay (No break in wire)
Approx. 10V or 0V	Broken wire

HINT: If there is approximately 10 V, the wire is broken between the center of the wire and the positive (+) end. If there is no voltage, the wire is broken between the center of the wire and ground.

BE

Downloaded from www.Manualslib.com manuals search engine

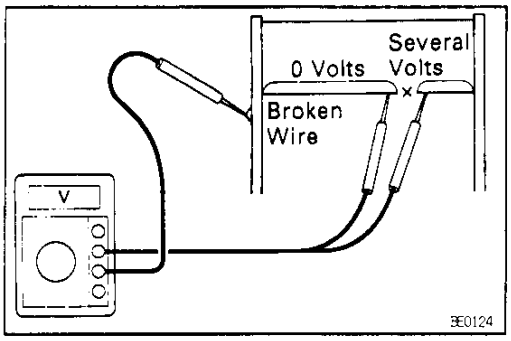

(d) Place the voltmeter positive (+) lead against the defogger positive (+) terminal.
(e) Place the voltmeter negative (−) lead with the foil strip against the heat wire at the positive (+) terminal end and slide it toward the negative (−) terminal end.
(f) The point where the voltmeter deflects from zero to several V is the place where the heat wire is broken.
HINT: If the heat wire is not broken, the voltmeter indicates 0 V at the positive (+) end of the heat wire but gradually increases to about 12 V as the meter probe is moved to the other end.

BE

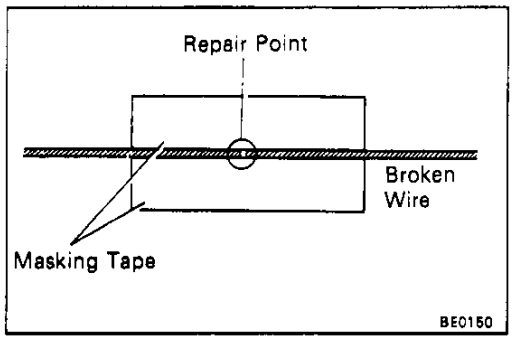

DEFOGGER WIRE REPAIR

BE06V-06

(a) Clean the broken wire tips with a grease, wax and silicone remover.
(b) Place the masking tape along both sides of the wire to be repaired.
(c) Thoroughly mix the repair agent (DuPont paste No. 4817).

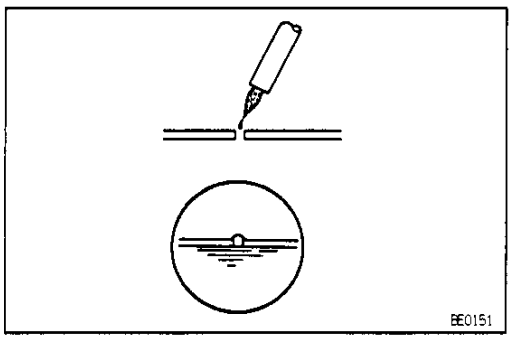

(d) Using a fine tip brush, apply a small amount to the wire.
(e) After a few minutes, remove the masking tape.
(f) Allow the repair to stand at least 24 hours.

Downloaded from www.Manualslib.com manuals search engine

POWER WINDOW CONTROL SYSTEM

BE01U-06

PARTS LOCATION

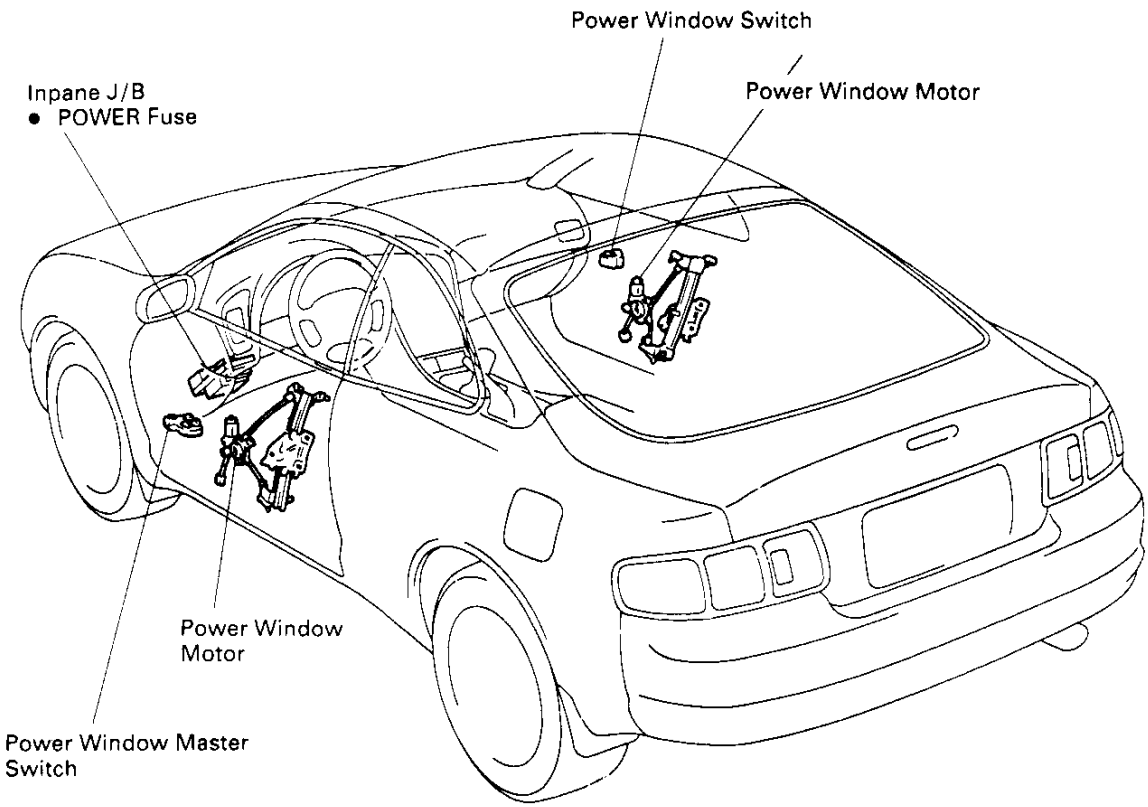

N10450

Downloaded from www.Manualslib.com manuals search engine

BE01V-09

TROUBLESHOOTING

The table below will be useful for you in troubleshooting these electrical problems. The most likely causes of the malfunction are shown in the order of their probability. Inspect each part in the order shown, and replace the part when it is found to be faulty.

Trouble	Parts name	(See page)
Power Window does not operate.	1. POWER Fuse	(BE−14)
	2. GAUGE Fuse	(BE−14)
	3. Power Main Relay	(BE−81)
	4. Ignition Switch	(BE−18)
	5. Power Window Master Switch	(BE−79)
	6. Wire Harness	
"One Touch Power Window System" does not operate.	1. Power Window Master Switch	(BE−79)
Only one window glass does not move.	1. Power Window Master Switch	(BE−79)
	2. Power Window Switch	(BE−81)
	3. Power Window Motor	(BE−82)
	4. Wire Harness	
"Window Lock System" does not operate.	1. Power Window Master Switch	(BE−79)
Illumination does not light up.	1. Power Window Master Switch	(BE−79)

BE

Downloaded from www.Manualslib.com manuals search engine

BE1YT-02

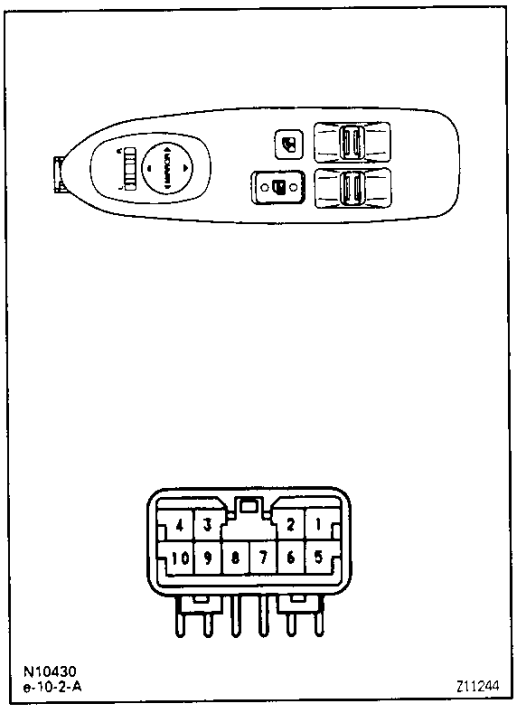

POWER WINDOW MASTER SWITCH INSPECTION

INSPECT POWER WINDOW MASTER SWITCH CONTINUITY

Inspect the switch continuity between terminals.

Driver's Switch

Switch position	Tester connection to terminal number	Specified value
UP	6 – 9 7 – 8	Continuity
OFF	6 – 9 8(6) – 9	Continuity
DOWN	6 – 7 8 – 9	Continuity

Passenger's Switch (Window unlock)

Switch position	Tester connection to terminal number	Specified value
UP	4(1) – 9(6) 7(5) – 10(8)	Continuity
OFF	4(1) – 9(6) 9(5) –10(6)	Continuity
DOWN	4(1) – 7(8) 9(5) –10(6)	Continuity

Passenger's Switch (Window lock)

Switch position	Tester connection to terminal number	Specified value
UP	7(8) – 10(5)	Continuity
OFF	4(5) – 10(1)	Continuity
DOWN	4(8) – 7(1)	Continuity

( ): RHD Models

If continuity is not as specified, replace the switch.

BE

Downloaded from www.Manualslib.com manuals search engine

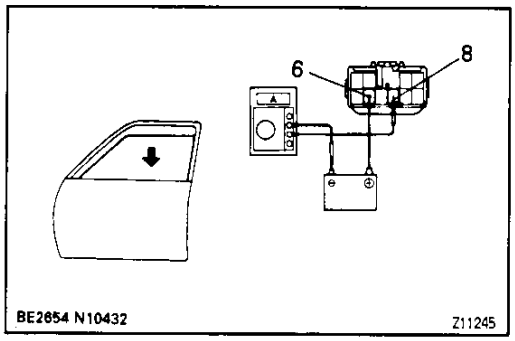

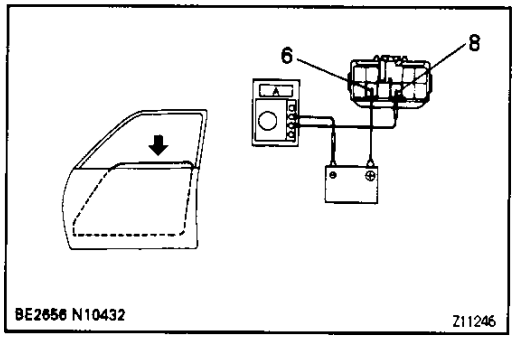

One Touch Power Window System / Current of Circuit

Inspection using an ammeter.

(a) Disconnect the connector from the master switch.

(b) Connect the positive (+) lead from the ammeter to terminal 8(7) on the wire harness side connector and the negative (−) lead to the negative terminal of the battery.

(c) Connect the positive (+) lead from the battery to terminal 6(9) on the wire harness side connector.

(d) As the window goes down, check that the current flow is approximately 7 A.

(e) Check that the current increases up to approximately 14.5 A or more when the window stops going down.
( ): RHD Models
HINT: The PTC opens some 4 – 90 seconds after the window stops going down, so that check must be made before the PTC operates.
If the operation is not as specified, replace the master switch.

BE

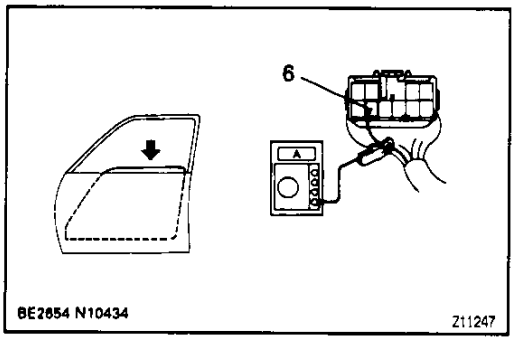

Inspection using an ammeter with a current–measuring probe.

(a) Remove the master switch with connector connected.

(b) Attach a current–measuring probe to terminal 6(9) of the wire harness.

(c) Turn the ignition switch ON and set the power window switch in the down position.

(d) As the window goes down, check that the current flow is approximately 7 A.

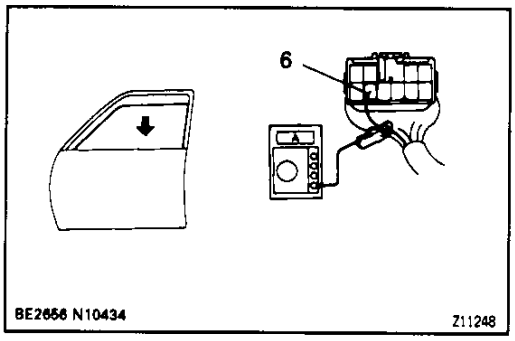

(e) Check that the current increases up to approximately 14.5 A or more when the window stops going down.
HINT: The PTC opens some 4 – 90 seconds after the window stops going down, so that check must be made before the PTC operates.
If operation is not as specified, replace the master switch.

Downloaded from www.Manualslib.com manuals search engine

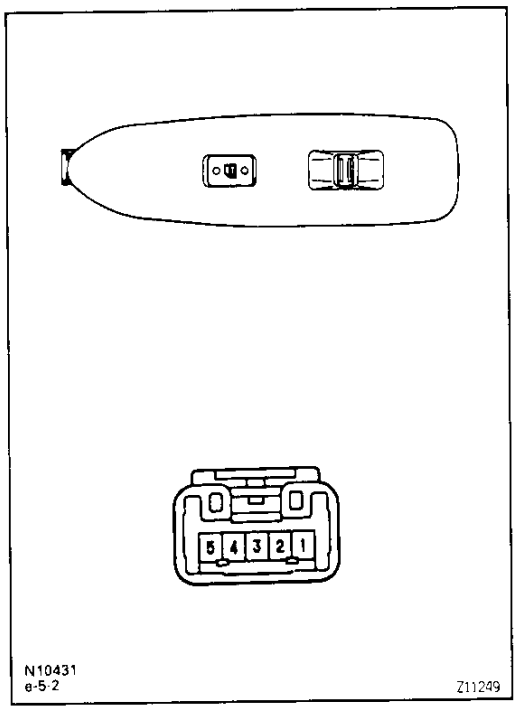

BE10A-05

POWER WINDOW SWITCH INSPECTION

INSPECT POWER WINDOW SWITCH CONTINUITY

Inspect switch continuity between terminals.

Switch position	Tester connection to terminal number	Specified value
UP	1 – 4 3 – 5	Continuity
OFF	1 – 2 3 – 5	Continuity
DOWN	1 – 2 3 – 4	Continuity

If continuity is not as specified, replace the switch.

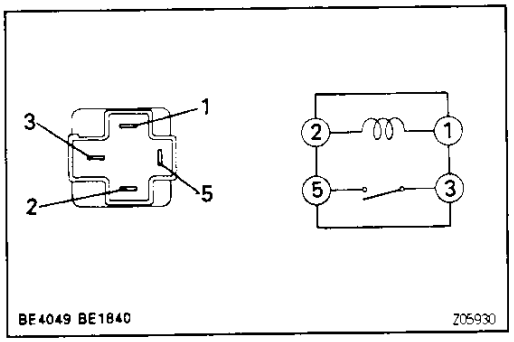

BE06B-0A

POWER MAIN RELAY INSPECTION

BE

INSPECT POWER MAIN RELAY CONTINUITY

Inspect relay continuity between terminals.

Condition	Tester connection to terminal number	Specified value
Constant	1 – 2	Continuity
Apply +B between terminals 1 and 2.	3 – 5	Continuity

If continuity is not as specified, replace the relay.

Downloaded from www.Manualslib.com manuals search engine

POWER WINDOW MOTOR INSPECTION BE1D8-05

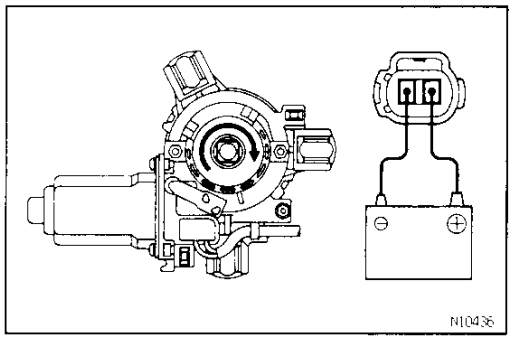

1. INSPECT DRIVER'S SIDE POWER WINDOW MOTOR OPERATION

(a) Connect the positive (+) lead from the battery to terminal 1 and the negative (−) lead to terminal 2, check that the motor turns clockwise.

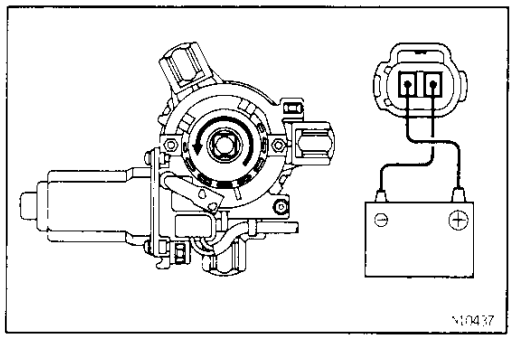

(b) Reverse the polarity, check that the motor turns counterclockwise.
If operation is not as specified, replace the motor.

BE

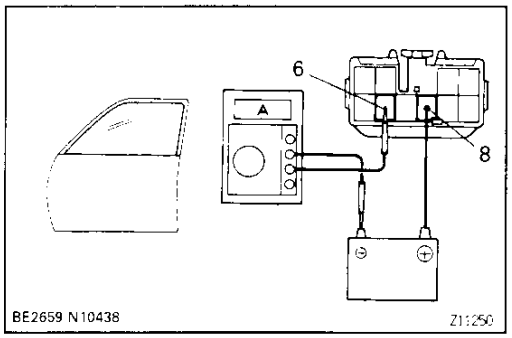

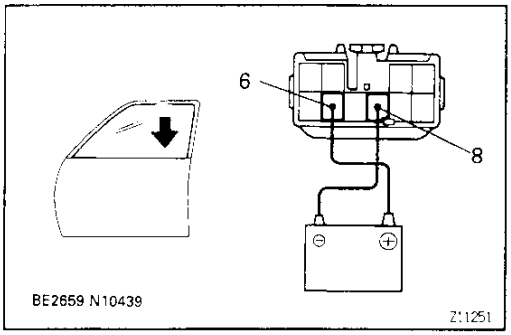

2. INSPECT DRIVER'S SIDE PTC THERMISTOR OPERATION

(a) Disconnect the connector from the master switch.

(b) Connect the positive (+) lead from the ammeter to terminal 6(9) on the wire harness side connector and the negative (−) lead to negative terminal of the battery.

(c) Connect the positive (+) lead from the battery to terminal 8(7) on the wire harness side connector, and raise the window to the fully closed position.

(d) Continue to apply voltage, check that the current changes from approximately 14 A to less than 1 A within 4 to 90 seconds.

(e) Disconnect the leads from terminals.

(f) Approximately 90 seconds later, connect the positive (+) lead from the battery to terminal 6(9) and negative (−) lead to terminal 8(8), check that the window begins to descend.
( ): RHD Models
If operation is not as specified, replace the motor.

Downloaded from www.Manualslib.com manuals search engine

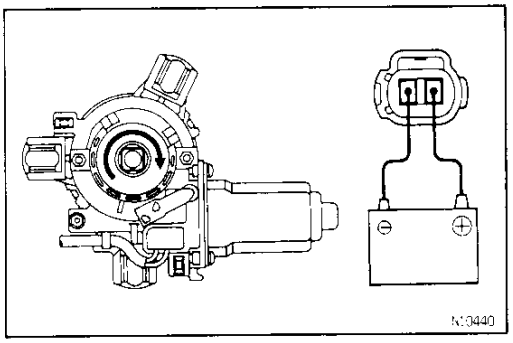

3. INSPECT PASSENGER'S SIDE POWER WINDOW MOTOR OPERATION

(a) Connect the positive (+) lead from the battery to terminal 1 and the negative (−) lead to terminal 2, check that the motor turns clockwise.

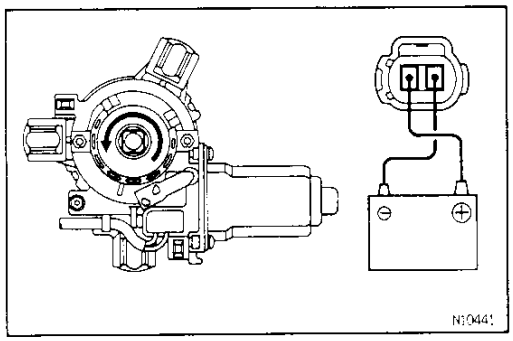

(b) Reverse the polarity, check that the motor turns counterclockwise.
If operation is not as specified, replace the motor.

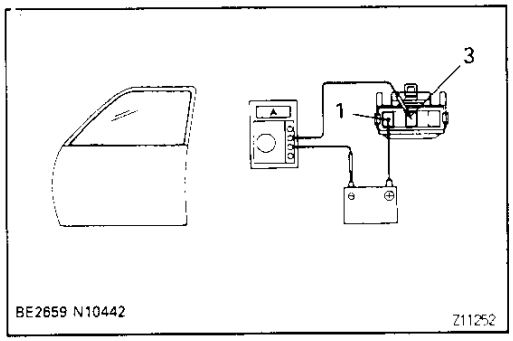

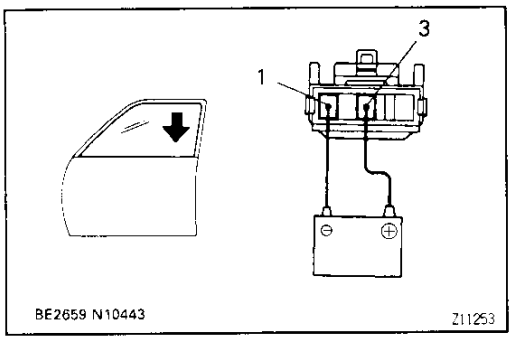

4. INSPECT PASSENGER'S SIDE PTC THERMISTER OPERATION

(a) Disconnect the connector from the power window switch.

(b) Connect the positive (+) lead from the ammeter to terminal 3 on the wire harness side connector and the negative (−) lead to negative terminal of the battery.

(c) Connect the positive (+) lead from the battery to terminal 1 on the wire harness side connector, and raise the window to the fully closed position.

(d) Continue to apply voltage, check that the current changes from approximately 14 A to less than 1 A within 4 to 90 seconds.

(e) Disconnect the leads from the terminals.

(f) Approximately 90 seconds later, connect the positive (+) lead from the battery to terminal 3 and the negative (−) lead to terminal 1, check that the window begins to descend.
If operation is not as specified, replace the motor.

BE

Downloaded from www.Manualslib.com manuals search engine

POWER DOOR LOCK CONTROL SYSTEM

PARTS LOCATION

BE022-05

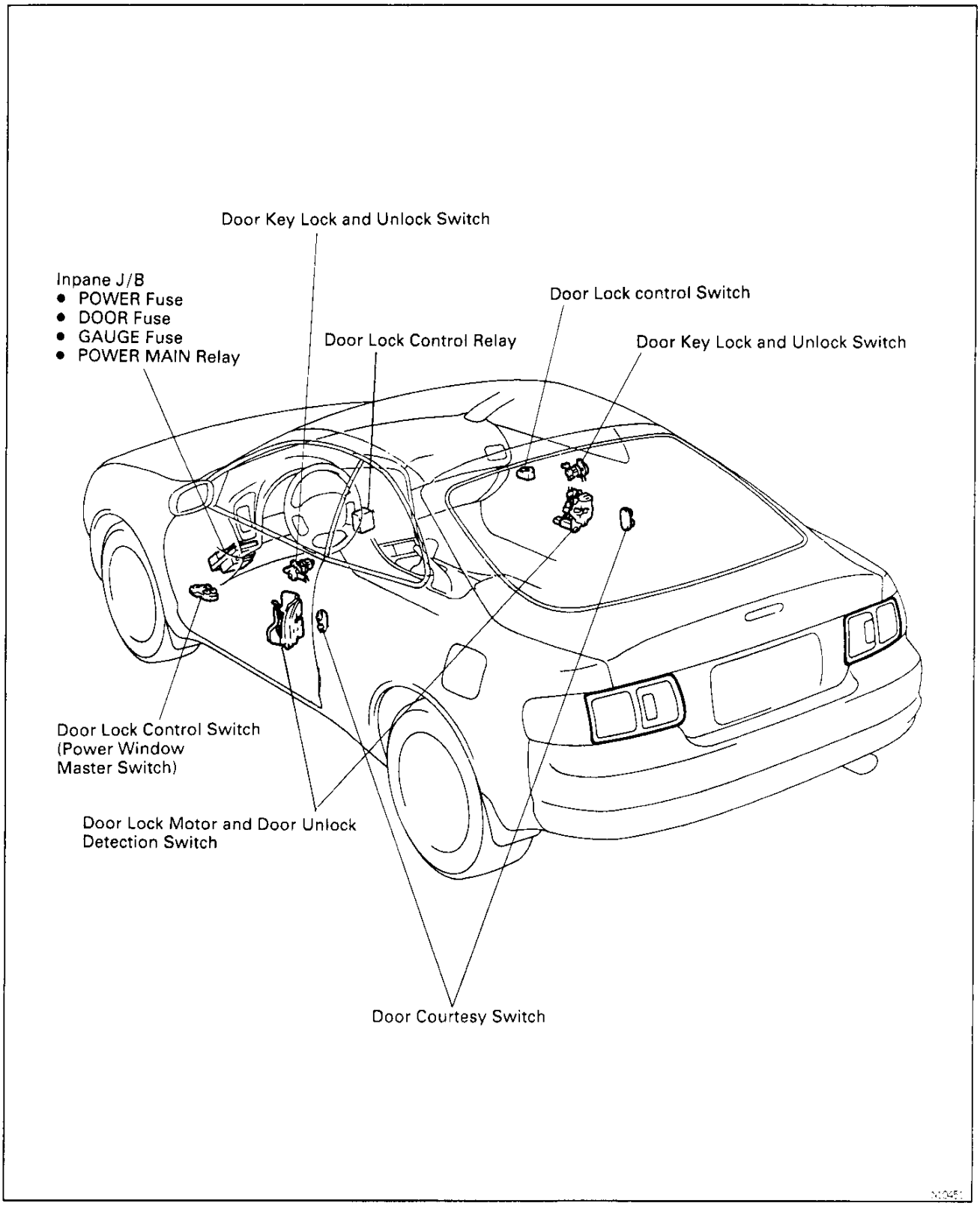

BE

Downloaded from www.Manualslib.com manuals search engine

BE021-07

TROUBLESHOOTING

The table below will be useful for you in troubleshooting these electrical problems. The most likely causes of the malfunction are shown in the order of their probability. Inspect each part in the order shown, and replace the part when it is found to be faulty.

Trouble	Parts name	(See page)
"Door lock control system" does not operate. (All)	1. Door Lock Control Relay	(BE-88)
	2. DOOR Fuse	(BE-14)
	3. GAUGE Fuse	(BE-14)
	4. Wire Harness	
	5. Other Parts	
Malfunction in Door Lock / Unlock. (Using door manual switch)	1. Door Lock Control Switch	(BE-86)
	2. Wire Harness	
	3. Door Lock Control Relay	(BE-88)
	4. Other Parts	
Malfunction in Door Lock / Unlock. (Using door manual switch and key)	1. Wire Harness	
	2. Other Parts	
Malfunction in Door Lock / Unlock. (Using Key)	1. Door Unlock Detection Switch	(BE-87)
	2. Wire Harness	
	3. Door Lock Control Relay	(BE-88)
	4. Other Parts	
Fault in 2 — Operation unlock function of Driver's side door key Lock and Unlock switch.	1. Door Unlock Detection Switch	(BE-87)
	2. Wire Harness	
	3. Door Lock Control Relay	(BE-88)
	4. Other Parts	
Fault in key confine prevention operation.	1. Door Unlock Detection Switch	(BE-87)
	2. Door Courtesy Switch	(BE-71)
	3. Door Lock Control Switch	(BE-86)
	4. Wire Harness	
	5. Door Lock Control Relay	(BE-88)
	6. Other Parts	
Only one door lock does not operate.	1. Door Lock Motor	(BE-87)
	2. Wire Harness	

Downloaded from www.Manualslib.com manuals search engine

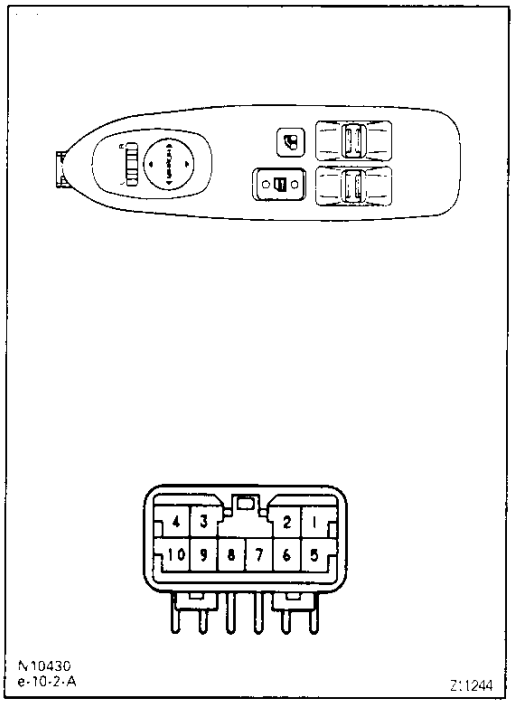

DRIVER'S DOOR LOCK CONTROL SWITCH INSPECTION

BE22M-01

INSPECT DRIVER'S DOOR LOCK CONTROL SWITCH CONTINUITY

Switch position	Tester connection to terminal number	Specified value
LOCK	5(6) – 9(10)	Continuity
OFF	–	No Continuity
UNLOCK	1(4) – 9(6)	Continuity

RHD Models

If continuity is not as specified, replace the switch.

BE

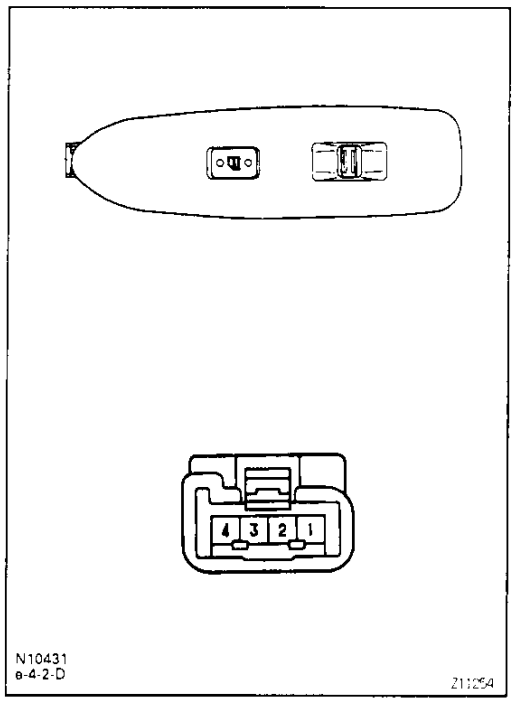

PASSENGER'S DOOR LOCK CONTROL SWITCH INSPECTION

BE22N-01

INSPECT PASSENGER'S DOOR CONTROL SWITCH CONTINUITY

Switch position	Tester connection to terminal number	Specifed value
LOCK	3 – 4	Continuity
OFF	–	No continuity
UNLOCK	2 – 4	Continuity

If continuity is not as specified, replace the switch.

Downloaded from www.Manualslib.com manuals search engine

BE1YV-02

DOOR LOCK MOTOR INSPECTION

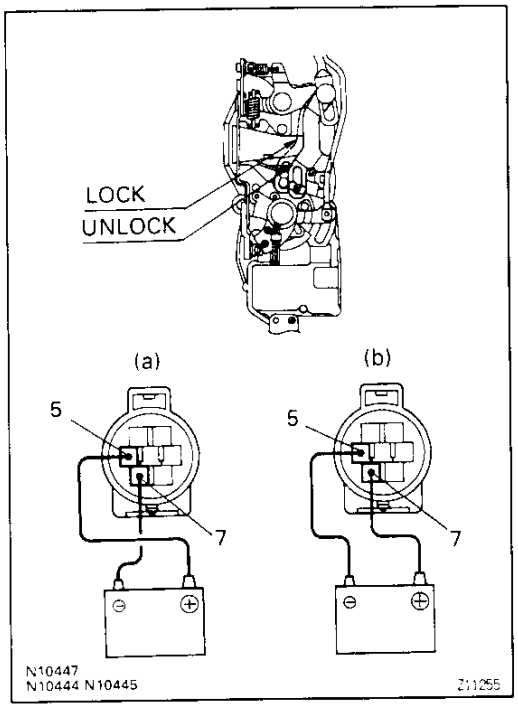

INSPECT DOOR LOCK MOTOR

Operation

(a) Connect the positive (+) lead from the battery to terminal 5 and the negative (−) lead to terminal 7, check that the door lock link moves to UNLOCK position.

(b) Remove the polarity, check that the door lock link moves to LOCK position.
If operation is not as specified, replace the door lock assembly.

BE1C8-04

DOOR UNLOCK DETECTION SWITCH INSPECTION

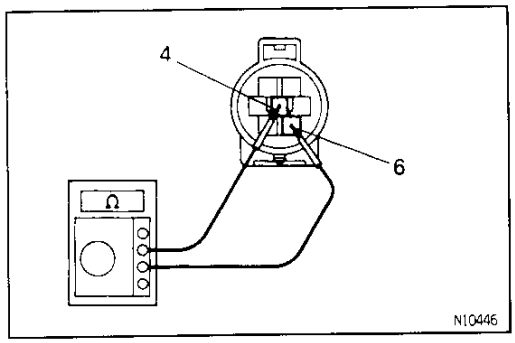

INSPECT DOOR UNLOCK DETECTION SWITCH CONTINUITY

Switch position	Tester connection to terminal number	Specified value
OFF (LOCK position)	–	No Continuity
ON (UNLOCK position)	4 – 6	Continuity

If continuity is not as specified, replace the door lock assembly.

BE

Downloaded from www.Manualslib.com manuals search engine

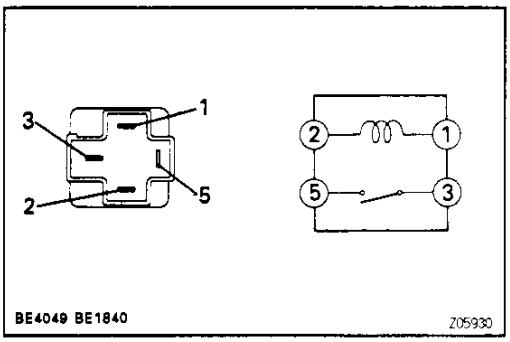

POWER MAIN RELAY INSPECTION

BE1YW-02

INSPECT POWER MAIN RELAY CONTINUITY

Inspect relay continuity between terminals.

Condition	Tester connection to terminal number	Specified
Constant	1 – 2	Continuity
Apply +B between terminals 1 and 2.	3 – 5	Continuity

If continuity is not as specified, replace the relay.

BE

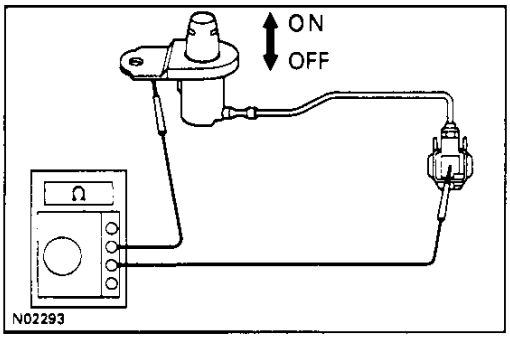

DOOR COURTESY SWITCH INSPECTION

BE1YX-02

INSPECT DOOR COURTESY SWITCH CONTINUITY

(a) Check that there is continuity between terminal and switch body with the switch ON (switch pin released).

(b) Check that there is no continuity between terminal and switch body with the switch OFF (switch pin pushed).

If continuity is not as specified, replace the switch.

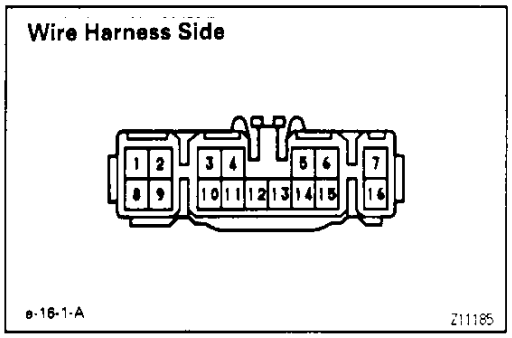

DOOR LOCK CONTROL RELAY INSPECTION

BE1YY-02

INSPECT DOOR LOCK CONTROL RELAY

Disconnect the connector from the relay and inspect the connector on the wire harness side as shown in the chart.

If circuit is as specified, inspect the door lock signal.

If the circuit is not as specified, inspect the circuits connected to other parts.

Tester connection to terminal number	Condition	Specified value (Voltage)
8 – Ground	Constant	Battery voltage
1 – Ground	Ignition switch position LOCK or ACC	No voltage
1 – Ground	Ignition switch position ON	Battery voltage

Downloaded from www.Manualslib.com manuals search engine

Tester connection to terminal number	Condition	Specified value (Continuity)
2 — Ground	Passenger's door courtesy switch position OFF(Door closed)	No continuity
2 — Ground	Passenger's door courtesy switch position ON(Door opened)	Continuity
5 — Ground	Passenger's door lock set to LOCK	No continuity
5 — Ground	Passenger's door lock set to UNLOCK	Continuity
6 — Ground	Driver's door lock set to LOCK	No continuity
6 — Ground	Driver's door lock set to UNLOCK	Continuity
9 — Ground	Driver's door lock switch position UNLOCK	Continuity
9 — Ground	Driver's door lock switch position LOCK	No continuity
10 — Ground	Door lock control switch position UNLOCK	No continuity
10 — Ground	Door lock control switch position LOCK	Continuity
11 — Ground	Door lock control switch position UNLOCK	Continuity
11 — Ground	Door lock control switch position LOCK	No continuity
12— Ground	Door key lock and unlock switch position UNLOCK	No continuity
12— Ground	Door key lock and unlock switch position LOCK	Continuity
13— Ground	Door key lock and unlock switch position UNLOCK	Continuity
13— Ground	Door key lock and unlock switch position LOCK	No continuity
14 — Ground	Driver's door courtesy switch position OFF (Door closed)	No continuity
14 — Ground	Driver's door courtesy switch position ON (Door opened)	Continuity
15 — Ground	Constant	Continuity
16 — Ground	Constant	Continuity
7 — Ground	Ignition switch position LOCK	Continuity

Downloaded from www.Manualslib.com manuals search engine

SLIDING ROOF SYSTEM
PARTS LOCATION

BE126-05

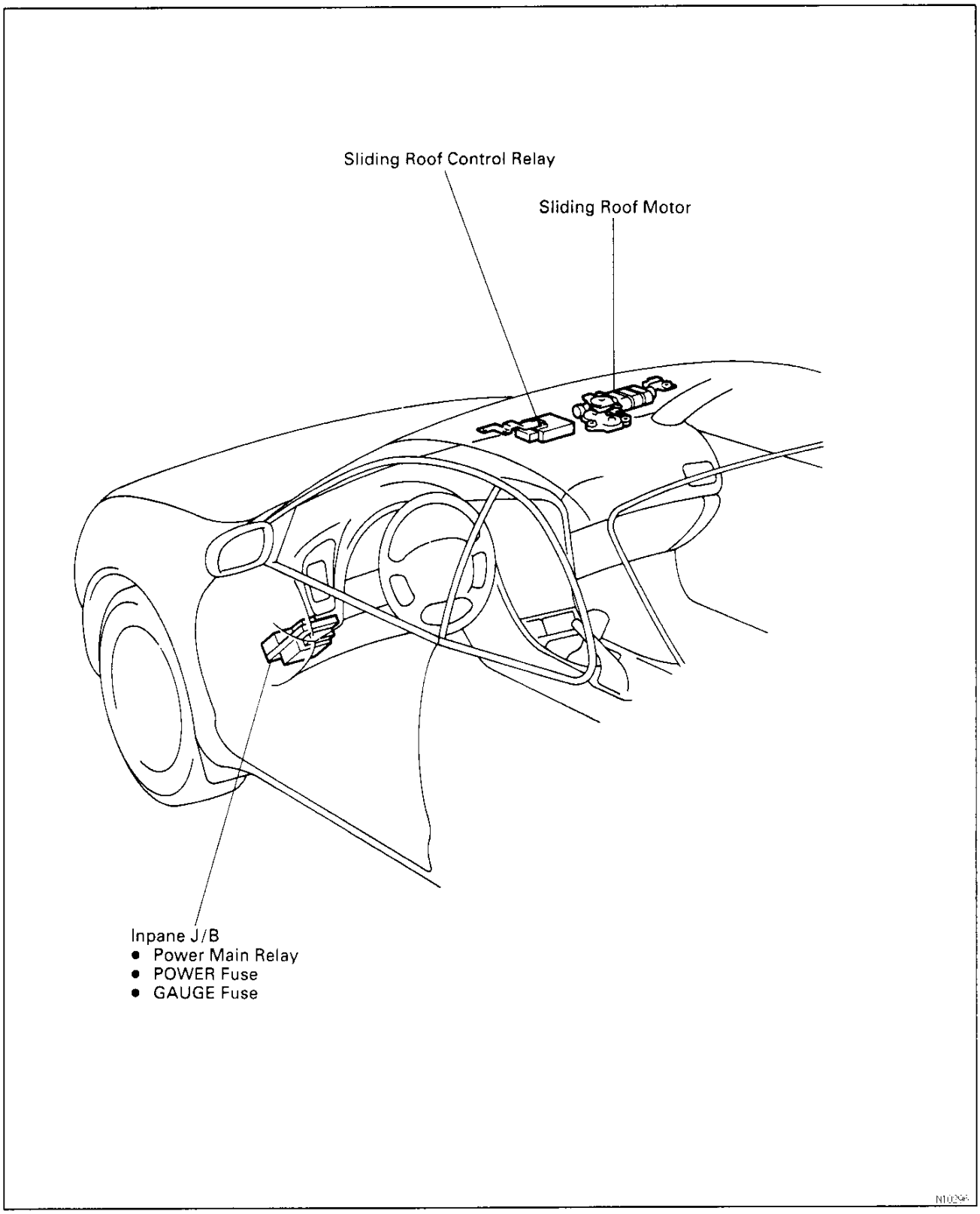

BE

Downloaded from www.Manualslib.com manuals search engine

TROUBLESHOOTING

The table below will be useful for you in troubleshooting these electrical problems. The most likely causes of the malfunction are shown in the order of their probability. Inspect each part in the order shown, and replace the part when it is found to be faulty.

Trouble	Parts name	(See page)
*1 Sliding roof system does not operate	1. DOOR Fuse	(BE—14)
	2. Ignition switch	(BE—18)
	3. Door Lock Control Relay	(BE—88)
	4. Wire Harness	
*2 Sliding roof system does not operate	1. GAUGE Fuse	(BE—14)
	2. POWER Fuse	(BE—14)
	3. Door Lock Control Relay	(BE—88)
	4. Sliding Roof Control Relay	(BE—93)
	5. Sliding Roof Switch	(BE—92)
	6. Sliding Roof Motor	(BE—92)
	7. Wire Harness	
Sliding roof system operates abnormally	1. Sliding Roof Control Relay	(BE—93)
	2. Limit Switch	(BE—94)
	3. Sliding Roof Switch	(BE—92)
	4. Wire Harness	
Sliding roof system stops operation half way	1. Sliding Roof Control Relay	(BE—93)
	2. Limit Switch	(BE—94)
	3. Sliding Roof Switch	(BE—92)
	4. Sliding Roof Motor	(BE—92)
"Key—off Sliding Roof" operation does not operate	1. POWER Fuse	(BE—14)
	2. Door Lock Control Relay	(BE—88)
	3. GAUGE Fuse	(BE—14)
	4. Ignition Switch	(BE—18)
	5. Door Unlock Detection Switch	(BE—87)
	6. Wire Harness	

*1: Door Lock does not operate.
*2: Door Lock is normal.

Downloaded from www.Manualslib.com manuals search engine

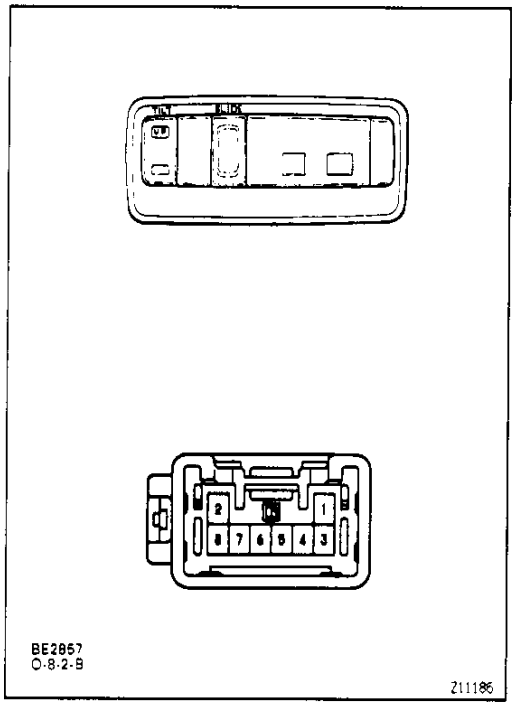

SLIDING ROOF SWITCH INSPECTION

BE127-04

INSPECT SLIDING ROOF SWITCH CONTINUIYT

Inspect the switch continuity between terminals.

Switch position	Tester connection to terminal number	Specified value
SLIDE OPEN	3 – 8	Continuity
SLIDE OFF	–	No continuity
SLIDE CLOSE	4 – 8	Continuity
TILT DOWN	6 – 8	Continuity
TILT OFF	–	No continuity
TILT UP	5 – 8	Continuity

If continuity is not as specified, replace the switch.

BE

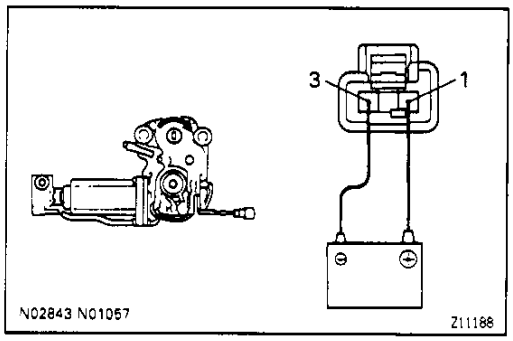

SLIDING ROOF MOTOR INSPECTION

BE1YZ-02

1. INSPECT SLIDING ROOF MOTOR OPERATION

(a) Connect the positive (+) lead from the battery to terminal 1 and the negative (–) lead to terminal 3, check that the motor turns clockwise.

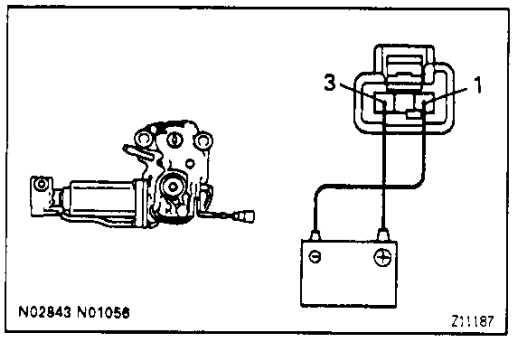

(b) Reverse the polarity, check that the motor turns counterclockwise.

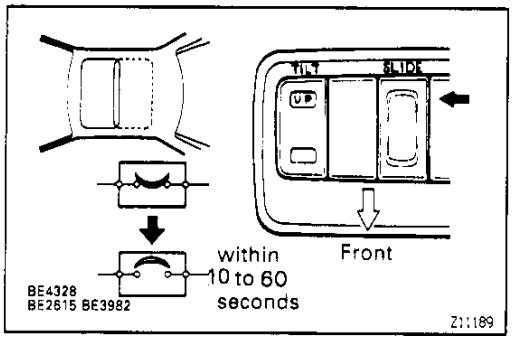

2. INSPECT CIRCUIT BREAKER OPERATION

(a) With the sliding roof in the fully opened position, hold the sliding roof switch in "OPEN" position and check that there is a circuit breaker operation noise within 10 to 60 seconds.

Downloaded from www.Manualslib.com manuals search engine

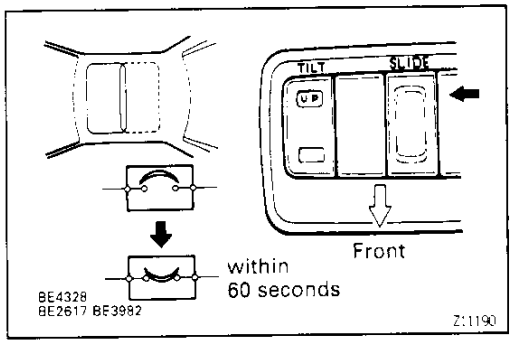

(b) With the sliding roof in the fully opened position, hold the sliding roof switch in "CLOSE" position and check that the sliding roof begins to close within 60 seconds.
If operation is not as specified, replace the motor.

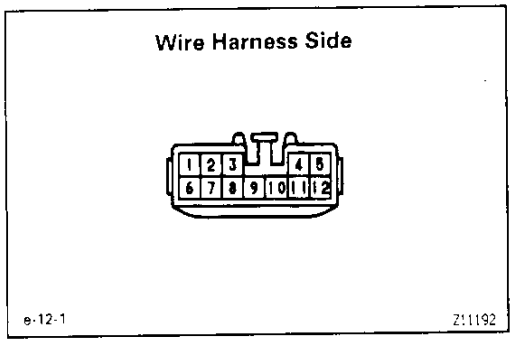

BE078-09

SLIDING ROOF CONTROL RELAY INSPECTION

INSPECT SLIDING ROOF CONTROL RELAY CIRCUIT

Disconnect the connector from the relay and inspect the connector on the wire harness side, as shown in the chart.

Tester connection to terminal number	Condition	Specified value (Continuity)
1 – Ground	Sliding roof control switch position (SLIDE) OFF or CLOSE	No continuity
1 – Ground	Sliding roof control switch position (SLIDE) OPEN	Continuity
2 – Ground	Sliding roof control switch position (SLIDE) OFF or OPEN	No continuity
2 – Ground	Sliding roof control switch position (SLIDE) CLOSE	Continuity
3 – Ground	Sliding roof control switch position (TILT) OFF or DOWN	No continuity
3 – Ground	Sliding roof control switch position (TILT) UP	Continuity
4 – Ground	Constant	No continuity
4 – 5	Constant	Continuity
5 – Ground	Constant	No continuity
7 – Ground	Sliding roof control switch position (TILT) OFF or UP	No continuity
7 – Ground	Sliding roof control switch position (TILT) DOWN	Continuity
8 – Ground	No. 1 limit switch position OFF (Sliding roof tilted up or open approx. 200 mm (7.87in.))	No continuity
8 – Ground	No. 1 limit switch position ON (Except for conditions mentioned above)	Continuity

BE

Downloaded from www.Manualslib.com manuals search engine

Tester connection to terminal number	Condition	Specified value (Continuity)
9 — Ground	No. 2 limit switch position OFF (Sliding roof closed)	No continuity
9 — Ground	No. 2 limit switch position ON (Sliding roof open)	Continuity
11 — Ground	Constant	Continuity

Tester connection to terminal number	Condition	Specified value (Voltage)
6 — Ground	Ignition switch position LOCK or ACC	*No voltage
6 — Ground	Ignition switch position ON	Battery voltage
12 — Ground	Constant	Battery voltage

*: Exceptions: During 60 second period after ignition switch ON → OFF (ACC) or until driver or passenger door is opened after ignition switch ON → OFF (ACC). If circuit is as specified, replace the relay.

BE

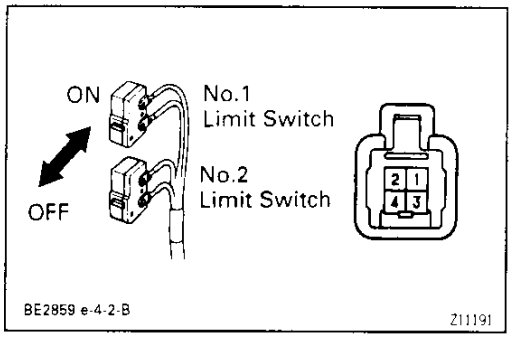

LIMIT SWITCH INSPECTION

BE1Z0-02

INSPECT LIMIT SWITCH CONTINUITY

Inspect the switch continuity between terminals.

Switch position	Tester connection to terminal number	Specified value
No.1 limit switch OFF (SW pin released)	—	No continuity
No.1 limit switch ON (SW pin pushed in)	1 — 4	Continuity
No.2 limit switch OFF (SW pin released)	—	No continuity
No.2 limit switch ON (SW pin pushed in)	2 — 4	Continuity

If continuity is not as specified, replace the switch.

Downloaded from www.Manualslib.com manuals search engine

BE06T-OH

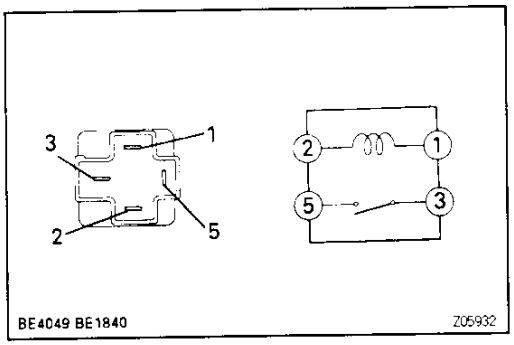

POWER MAIN RELAY INSPECTION

INSPECT POWER MAIN RELAY CONTINUITY

Inspect relay continuity between terminals.

Condition	Tester connection to terminal number	Specified value
Constant	1 — 2	Continuity
Apply +B between terminals 1 and 2.	3 — 5	Continuity

If continuity is not as specified, replace the relay.

BE

Downloaded from www.Manualslib.com manuals search engine

POWER MIRROR CONTROL SYSTEM

BE129-05

PARTS LOCATION

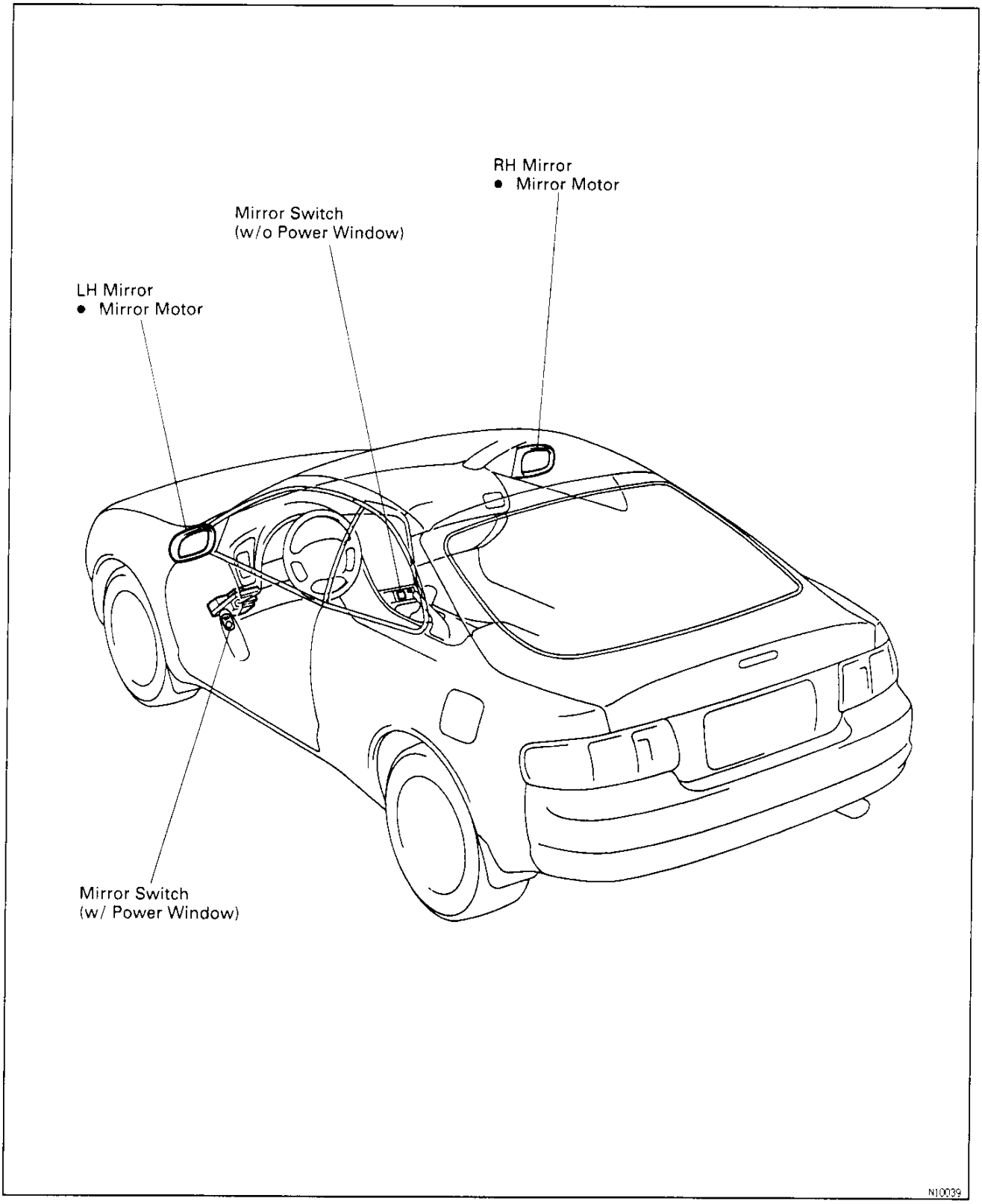

BE

Downloaded from www.Manualslib.com manuals search engine

BE07E-0A

TROUBLESHOOTING

The table below will be useful for you in troubleshooting these electrical problems. The most likely causes of the malfunction are shown in the order of their probability. Inspect each part in the order shown, and replace the part when it is found to be faulty.

Trouble	Parts name	(See page)
Mirror does not operate	1. CIG & RAD Fuse	(BE−14)
	2. Mirror Switch	(BE−97)
	3. Mirror Motor	(BE−98)
	4. Wire Harness	
Mirror operates abnormally	1. Mirror Switch	(BE−97)
	2. Mirror Motor	(BE−98)
	3. Wire Harness	

(w/ Power Window)

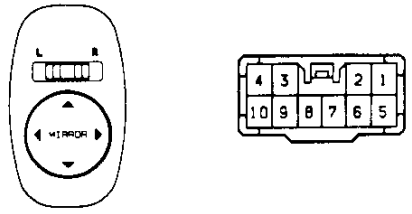

N04094 S-10-2 Z12979

BE1Z1-02

MIRROR SWITCH INSPECTION

BE

INSPECT MIRROR SWITCH CONTINUITY w/ POWER WINDOW

Master Switch Position "L"

Switch position	Tester connection to terminal number	Specified value
OFF	—	No continuity
UP	1 − 10 3 − 4	Continuity
DOWN	1 − 3 4 − 10	Continuity
LEFT	1 − 9 3 − 4	Continuity
RIGHT	1 − 3 4 − 9	Continuity

Master Switch Position "R"

Switch position	Tester connection to terminal number	Specified value
OFF	—	No continuity
UP	1 − 6 3 − 4	Continuity
DOWN	1 − 3 4 − 6	Continuity
LEFT	1 − 2 3 − 4	Continuity
RIGHT	1 − 3 2 − 4	Continuity

Downloaded from www.Manualslib.com manuals search engine

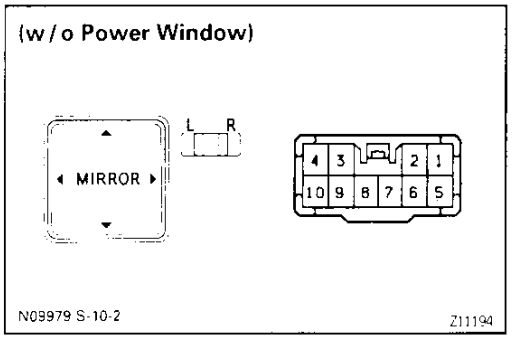

w/o POWER WINDOW:
Master Switch Position "L"

Switch position	Tester connection to terminal number	Specified value
OFF	—	No continuity
UP	3 — 2 7 — 8	Continuity
DOWN	2 — 7 3 — 8	Continuity
LEFT	1 — 3 7 — 8	Continuity
RIGHT	1 — 7 3 — 8	Continuity

Master Switch Position "R"

Switch position	Tester connection to terminal number	Specified value
OFF	—	No continuity
UP	3 — 10 7 — 8	Continuity
DOWN	3 — 8 7 — 10	Continuity
LEFT	3 — 5 7 — 8	Continuity
RIGHT	3 — 8 5 — 7	Continuity

If continuity is not as specified, replace the switch.

BE

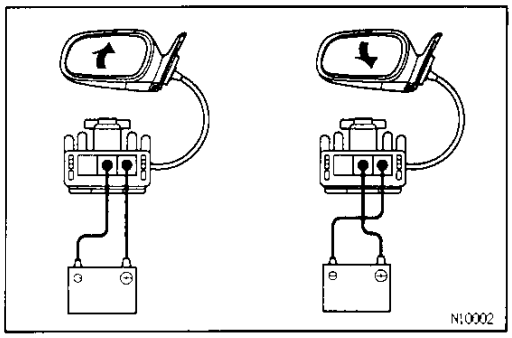

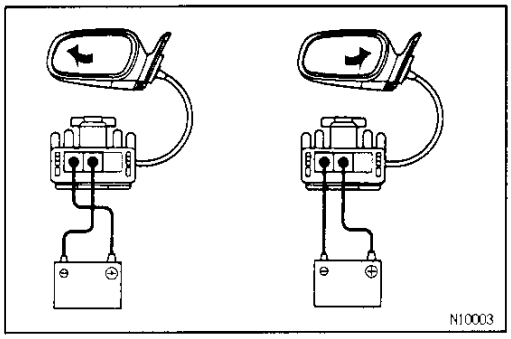

MIRROR MOTOR INSPECTION

BE07J-07

INSPECT MIRROR MOTOR OPERATION

( ): W/ Mirror Heater

(a) Connect the positive (+) lead from the battery to terminal 3(6) and negative (−) lead to terminal 2(5), check that the mirror turns upward.

(b) Reverse the polarity, check that the mirror turns downward.

(c) Connect the positive (+) lead from the battery to terminal 1(4) and negative (−) lead to terminal 2(5), check that the mirror turns to left side.

(d) Reverse the polarity, check that the mirror turns to right side.

If operation is not as specified, replace the mirror.

Downloaded from www.Manualslib.com manuals search engine

SEAT HEATER SYSTEM
PARTS LOCATION

BE22P-01

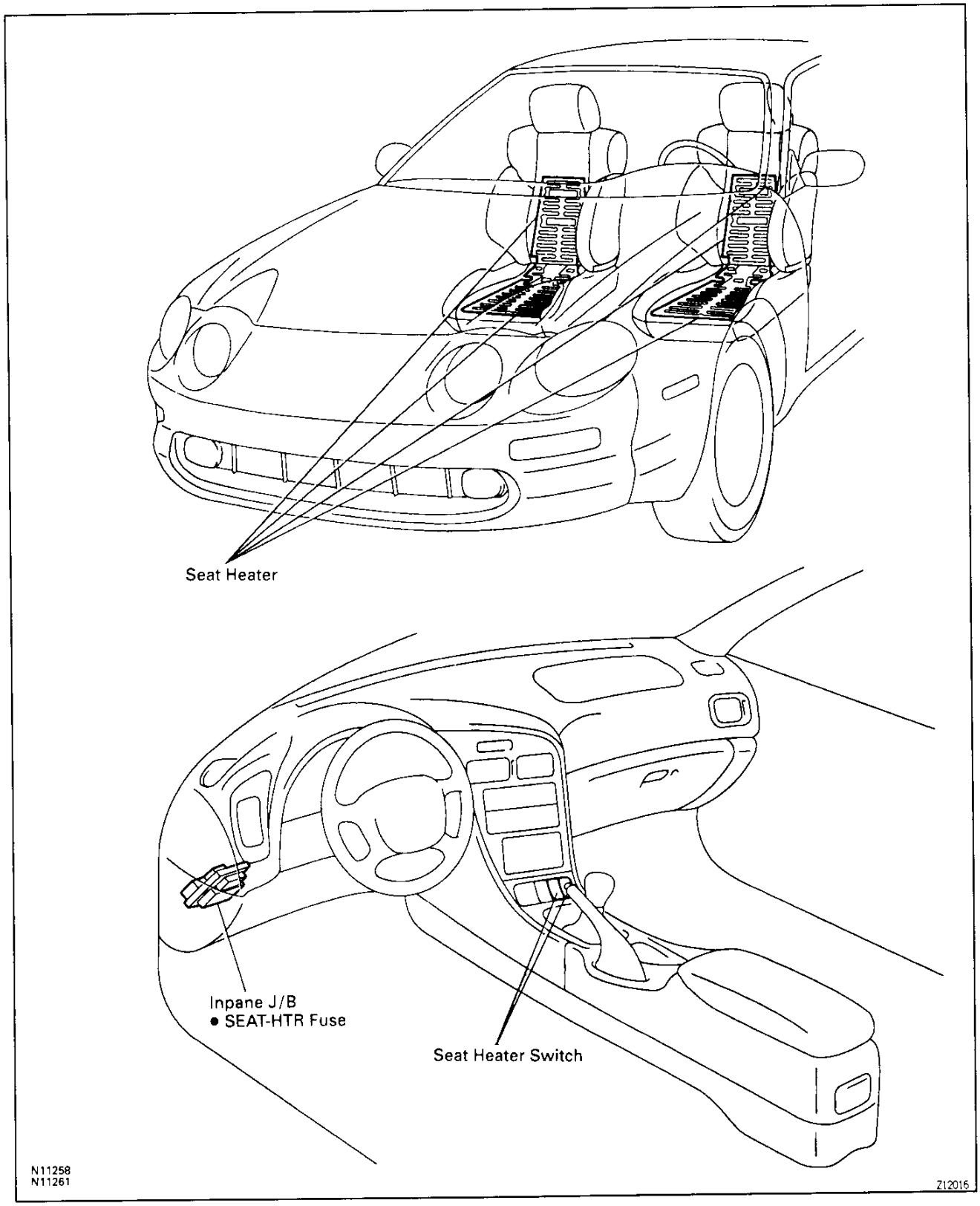

BE

Downloaded from www.Manualslib.com manuals search engine

TROUBLESHOOTING

The table below will be useful for you in troubleshooting these electrical problems. The most likely causes of the malfunction are shown in the order of their probability. Inspect each part in the order shown and replace the part when it is found to be faulty.

Trouble	Parts name	(See page)
Seat heaters do not operate (Driver's and Passenger's)	1. SEAT HTR Fuse 2. Wire Harness	(BE−14)
Driver's seat heater does not operate	1. Seat Heater Switch (Driver's) 2. Seat Heater 3. Wire Harness	(BE−100) (BE−101)
Passenger's seat heater does not operate	1. Seat Heater Switch (Passenger's) 2. Seat Heater 3. Wire Harness	(BE−100) (BE−101)
Seat heater temperature is too hot	1. Seat Heater	(BE−101)

BE

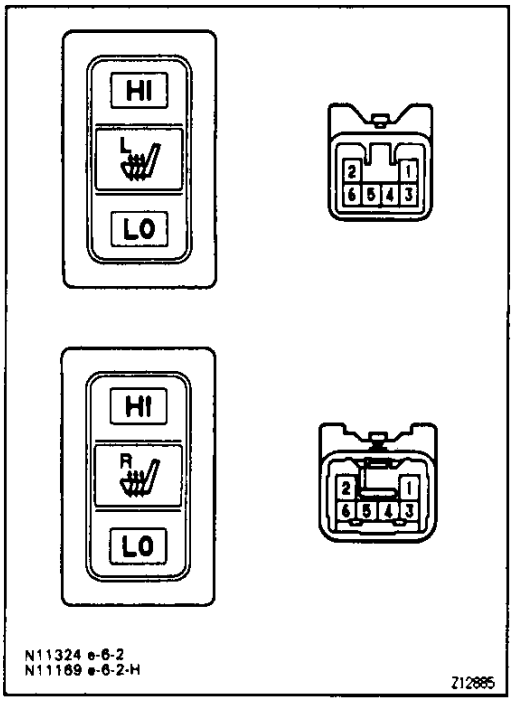

SEAT HEATER SWITCH INSPECTION

1. INSPECT SEAT HEATER SWITCH CONTINUITY

Switch position	Tester connection to terminal number	Specified value
HI	2 − 4 3 − 6	Continuity
OFF	−	No continuity
LO	3 − 4	Continuity
Illumination circuit	1 − 5	Continuity

If continuity is not as specified, replace the switch or the bulb.

Downloaded from www.Manualslib.com manuals search engine

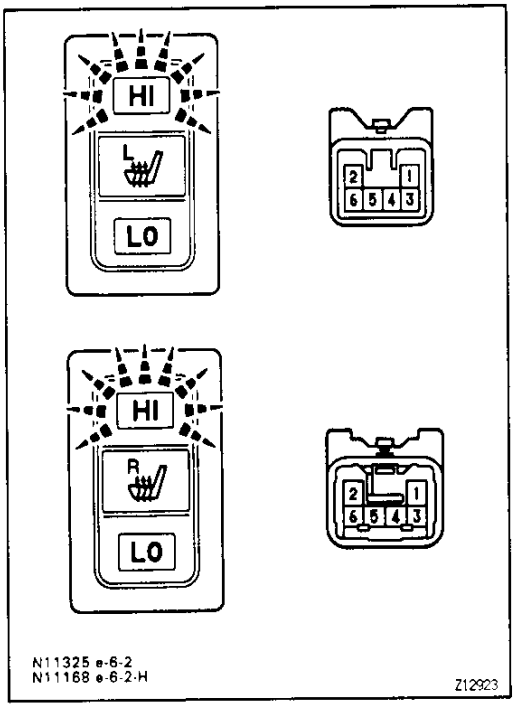

2. INSPECT SEAT HEATER INDICATOR LIGHT

(a) Connect the positive (+) lead from the battery to terminals 2 and 6, the negative (−) lead to terminal 1.

(b) Push the switches, check that the indicator light up. If operation is not as specified, replace the switch and inspect the circuits connected to other parts.

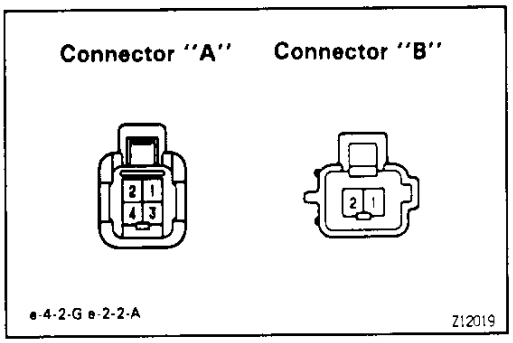

SEAT HEATER INSPECTION

BE33Z-01

BE

INSPECT SEAT HEATER CONTINUITY

(a) Heat the thermostat with a light.

(b) Inspect the seat heater continuity between terminals.

Tester connection to terminal number	Condition	Specified value (Continuity)
A1 − A3	Constant	Continuity
A2 − B2	Constant	Continuity
A1 − A3	Seat heater temperature below 25 °C (77 °F)	Continuity
A3 − B1	Seat heater temperature below 25 °C (77 °F)	Continuity
A1 − A3	Seat heater temperature above 45 °C (113 °F)	No continuity
A3 − B1	Seat heater temperature above 45 °C (113 °F)	No continuity

If continuity is not as specified, replace the seat cushion cover.

Downloaded from www.Manualslib.com manuals search engine

CRUISE CONTROL SYSTEM
PARTS LOCAITON

BE228-01

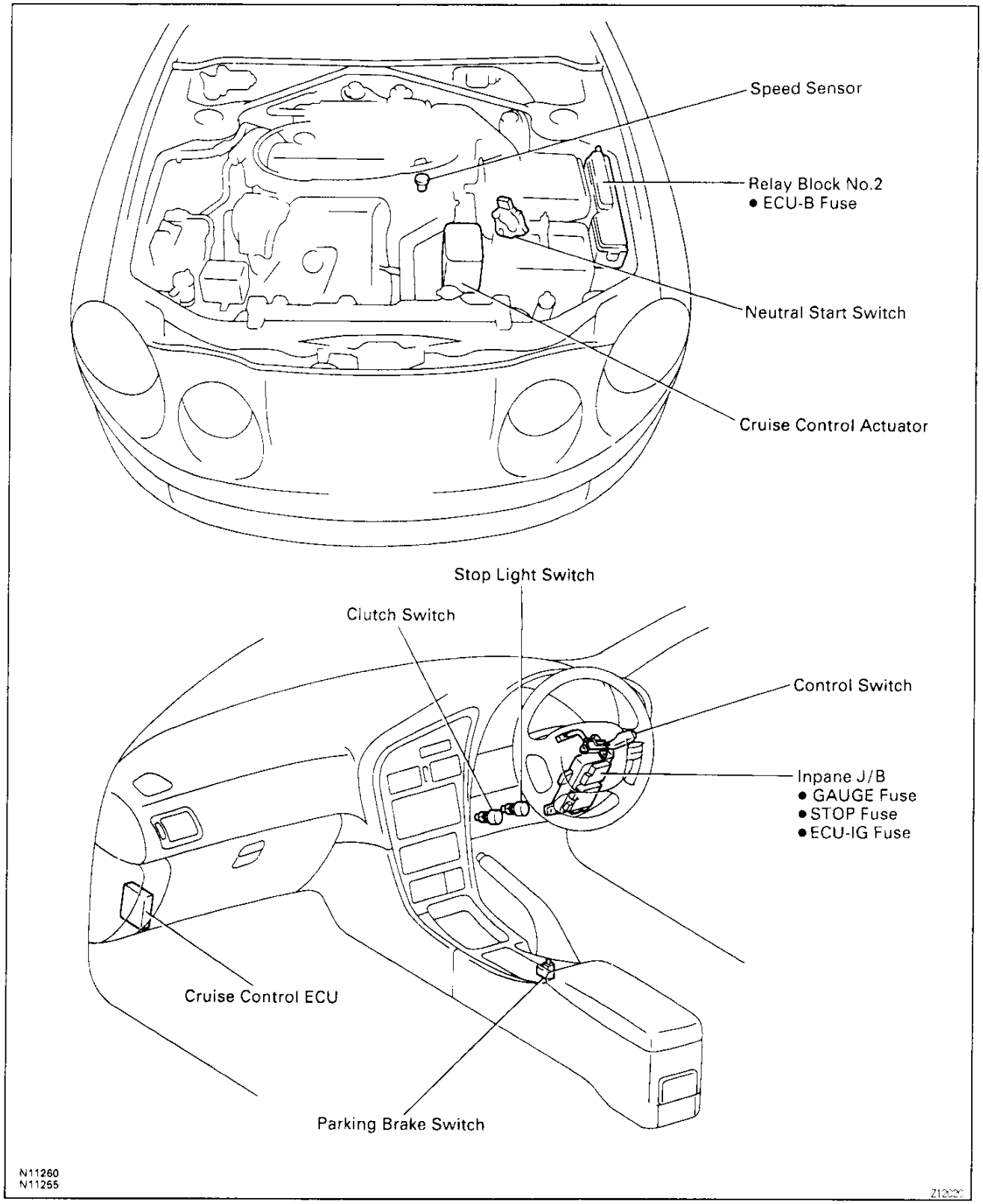

BE

Downloaded from www.Manualslib.com manuals search engine

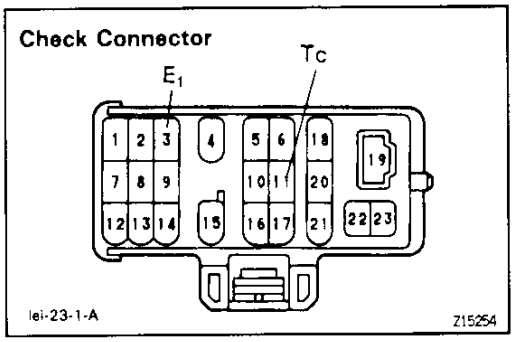

CHECK DIAGNOSIS SYSTEM

1. READ DIAGNOSTIC TROUBLE CODE

Type A:

(a) If while driving with the cruise control on, the system is canceled by a malfunction in either the actuator, speed sensor or cruise control switch circuit, the cruise control indicator light "CRUISE" will blink.

(b) While stopped, connect terminals 3 and 11 of the check connector.
HINT: If the ignition switch is turned off, the diagnostic trouble code will not be erased from the computer memory.

(c) Read the diagnostic trouble code on the indicator light "CRUISE".

DTC	CRUISE MAIN Indicator Light Blinking Pattern	Diagnosis
–	ON / OFF BE3931	Normal
11	ON / OFF BE3931	• Overcurrent (short) in motor circuit.
12	ON / OFF BE3931	• Overcurrent (short) in magnet clutch circuit. • Open in magnet clutch circuit for 0.8 sec.
13	ON / OFF BE3931	• Position sensor detects abnormal voltage.
14	ON / OFF BE3931	• Open in actuator motor circuit. • Position sensor signal value does not change when the motor operates.
21	ON / OFF BE3932	• Speed signal is not input to the ECU while cruise control is set.
23	ON / OFF BE3932	• Actual vehicle speed has dropped by 16 km/h (10 mph) or more below the set speed. • Speed Sensor Pulse is abnormal.
32	ON / OFF BE3933	• Short in control switch circuit.
34	ON / OFF BE3933	• Voltage abnormality in control switch.
41	ON / OFF BE3934	• Duty ratio of 100% output to motor acceleration side.
42	ON / OFF BE3934	• Source voltage drop.

HINT:
- Indication codes appear in order from No. 11.
- If there is no indication code, perform troubleshooting and inspection.

V05270

BE

Downloaded from www.Manualslib.com manuals search engine

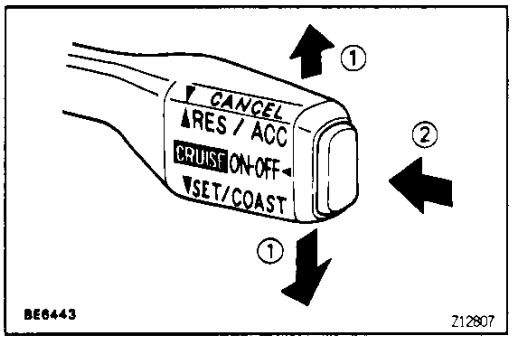

2. INPUT SIGNAL CHECK

Type B:

Output of Code

1. (a) For checks No.1～No.3
   Turn the ignition switch ON.
   (b) For check No.4
   ① Jack up the vehicle.
   ② Start the engine.
   ③ Shift to D range.
2. Turn the control switch to SET/COAST position or RES/ACC position and hold it down or up ①.
3. Push the main switch on ②.
4. Check that the CRUISE MAIN indicator light blinks twice repeatedly.
5. Turn the SET/COAST switch or RES/ACC switch off.
6. Operate each switch as listed in the table below.
7. Read the blinking pattern of the CRUISE MAIN indicator light.
8. After performing the check, turn the main switch off.
   HINT: When 2 or more signals are input to the ECU, only the lowest—numbered code is displayed.

BE

No.	Operation Method	CRUISE MAIN Indicator Light Blinking Pattern	Diagnosis
1	Turn SET/COAST switch ON.	Light ON, OFF; 0.25, 0.25, 1 sec (BE4006)	SET/COAST switch circuit is normal.
2	Turn RES/ACC switch ON.	Light ON, OFF (BE4006)	RES/ACC switch circuit is normal.
3	Turn CANCEL switch ON.	Light ON, OFF; Switch OFF, Switch ON (BE4006)	CANCEL switch circuit is normal.
	Turn stop light switch ON. (Depress brake pedal)		Stop light switch circuit is normal.
	Turn parking brake switch ON. (Pull up the parking brake lever)		Parking brake switch circuit is normal.
	Turn neutral start switch OFF. (Shift to EXCEPT D RANGE)	ON, OFF; Switch ON, Switch OFF (BE4006)	Neutral start switch circuit is normal.
	Turn clutch switch OFF. (Depress clutch pedal)		Clutch switch circuit is normal.
4	Drive at 40 km/h (25 mph) or higher.	Light ON, OFF (BE4006)	Speed sensor is normal.
	Drive at 40 km/h (25 mph) or below.	Light ON, OFF (BE4006)	

V05136

Downloaded from www.Manualslib.com manuals search engine

BE23U-01

TROUBLESHOOTING

Use the table below to help you find the cause of the problem. The numbers indicate the priority of the likely cause of the problem. Check each part in order. If necessary, replace these parts.

Chart No.				D	C	C	F	H, I	G	E		K		
Inspection Item / Diagnosis Trouble Code / Problem	Type A	Type B	Cruise Control ECU	Actuator	Main Switch (in Control Switch)	Control Switch	Stop Light Switch	Clutch Switch or Neutral Start Switch	Parking Brake Switch	Speed Sensor	Speed Control Cable Funcion	Throtle Position Sensor (IDL)	Wire Harness	Indicator Light
• "CRUISE" Indicator light blinks. • Cruise control system goes not set. • Cruise control system does not operate.	11	–	3	2									1	
	12	–	4	2			3						1	
	13	–	3	2									1	
	14	–	3	2									1	
	21	–	3							2			1	
	23	–	4							2	3		1	
	32	–	3			2							1	
	34	–	3			2							1	
	41	–	1											
	42	–	Source voltage drop											
Indicator light does not light up.			3										1	2
Large speed drop when the cruise control switch turned to SET.			4	3							1	2		
Vehicle speed fluctuates when cruise control switch turned to SET.			4	3							1	2		
Set speed deviates on high or low side.			4	3						1	2			
Acceleration response is sluggish when cruise control switch turned to "ACCEL" or "RESUME"			5	4		3				2	1			
Cruise control system goes not set. Cruise control system does not operate.	4	OK	9	8	2	3	4	5	6		7		1	
		NG	2							1				
Set speed does no cancel when brake pedal depressed.	3	OK	1											
		NG	2				1							
Set speed does not cancel when parking brake lever pulled.	3	OK	1											
		NG	2						1					
Cruise control not cancelled, even when transmission is shifted to EXCEPT D RANGE.	3	OK	1											
		NG	2					1						
Set speed does not cancel when clutch pedal depressed.	3	OK	1											
		NG	2					1						
Set speed does not cancel when cruise control switch turned to CANCEL	3	OK	1											
		NG	2			1								
Vehicle speed does not decrease when cruise control switch turned to COAST.	1	OK	4	1						3	2			
		NG	2			1								
Vehicle speed does not accelerate when cruise control switch turned to ACCEL.	2	OK	4	1						3	2			
		NG	2			1								
Vehicle speed does not return to memorized cruise when control switch turned to RESUME	2	OK	4	1						3	2			
		NG	2			1								
Speed can be set below about 40 km/h (25 mph.)	4	OK	1											
		NG	2							1				
Cruise control goes not disengage even at about 40 km/h (25 mph) or less.	4	OK	2	1										
		NG	2							1				

V05319

BE

Downloaded from www.Manualslib.com manuals search engine

A POWER SOURCE CIRCUIT

HINT: While carrying out the following inspection, make certain that the connectors and terminals are properly connected.

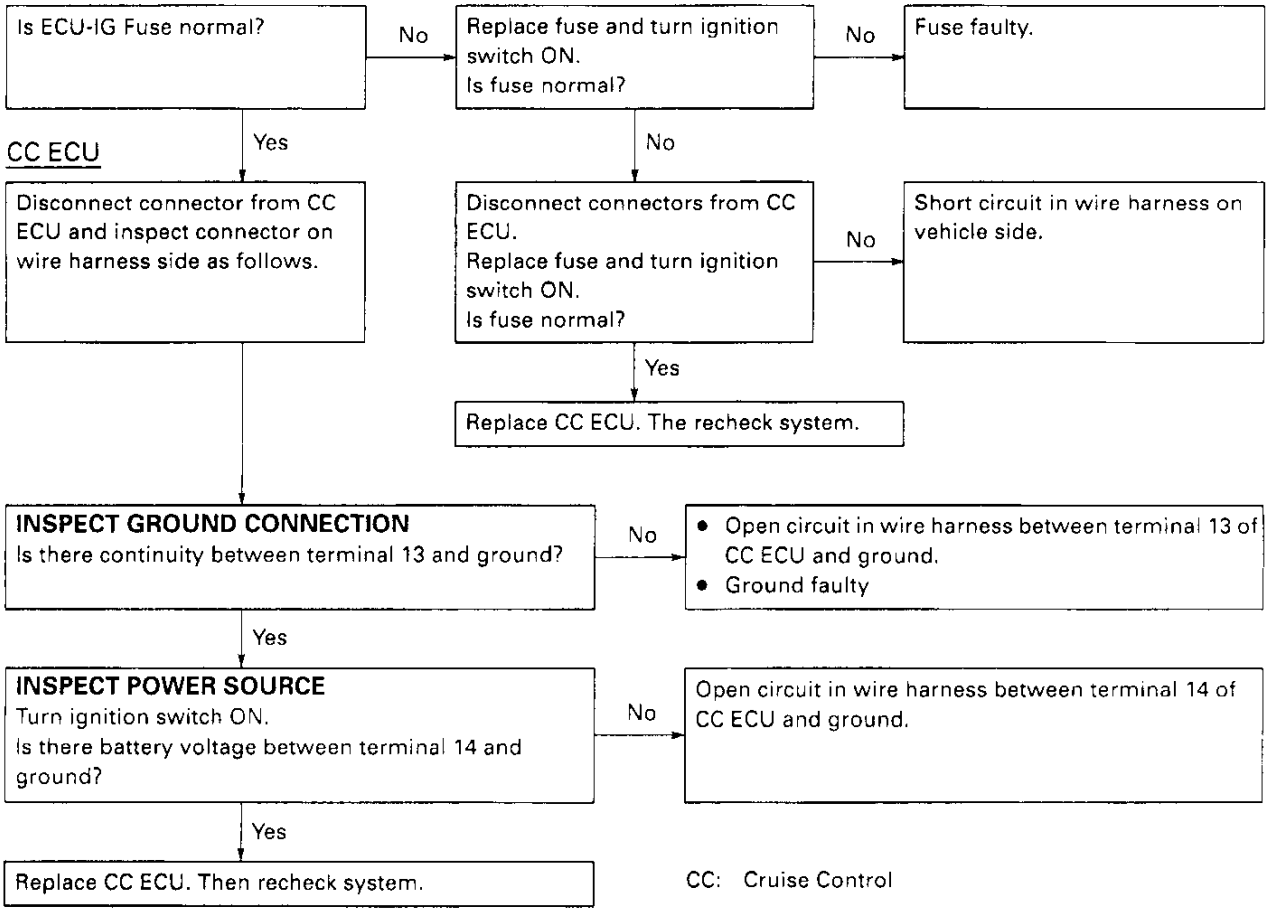

CC: Cruise Control

BE

V05247

Downloaded from www.Manualslib.com manuals search engine

B CRUISE CONTROL INDICATOR CIRCUIT

HINT: While carrying out the following inspection, make certain that the connectors and terminals are properly connected.

Is GAUGE fuse normal?

- No → Replace fuse and turn ignition switch ON. Is fuse normal?
  - Yes → Fuse faulty.
  - No → Short circuit in wire harness on vehicle side.
- Yes ↓

COMBINATION METER

Disconnect connector "C" from combination meter and inspect connector on wire harness side as follow.

INSPECT POWER SOURCE
Turn ignition switch ON.
Is there battery voltage between terminal C-12 and ground?

- No → Open circuit in wire harness terminal "C" and GAUGE fuse.
- Yes ↓

INSPECT BULB CONDITION
Is bulb condition normal?

- No → Replace bulb. Then recheck system.
- Yes ↓

CC ECU

Install bulb and connect connector to combination meter.
Disconnect connector from CC ECU and inspect connector on wire harness side as follows.

INSPECT INDICATOR CIRCUIT
Is there continuity between terminal 7 and ground?

- Yes →
  - Short circuit in wire harness between terminals. 7 of CC ECU and A-9 of combination meter.
  - Short circuit in circuit plate of combination meter between terminal A-9 and CC indicator bulb.
- No ↓

Turn ignition switch ON.
Is there battery voltage between terminal 7 and ground?

- No →
  - Open circuit in wire harness between terminals. 7 of CC ECU and A-9 of combination meter.
  - Open circuit in circuit plate of combination meter between terminal A-9 and CC indicator bulb or between terminal C-12 and CC indicator bulb.
- Yes ↓

Replace CC ECU. Then recheck system.

CC: Cruise Control

BE

Downloaded from www.Manualslib.com manuals search engine

C CONTROL SWITCH CIRCUIT

HINT: While carrying out the following inspection, make certain that the connectors and terminals are properly connected.

CONTROL SWITCH

Disconnect connector from control switch and inspect connector on wire harness side as follows.

INSPECT GROUND CONNECTION
Is there continuity between terminal 3 and ground?

- No → • Open circuit in wire harness between terminal 3 of control switch and ground.
  • Ground faulty.
- Yes ↓

INSPECT CONTROL SWITCH
Is control switch operation normal?

- No → Replace control switch. Then recheck system.
- Yes ↓

CC ECU

Connect connector to control switch.
Disconnect connectors from CC ECU and inspect connectors on wire harness side as follows.

BE

INSPECT MAIN SWITCH CIRCUIT
Is there continuity between terminal 19 and ground with main switch OFF?

- Yes → Short circuit in wire harness between terminals 19 of CC ECU and 5 of control switch.
- No ↓

Is there continuity between terminal 19 and ground with main switch ON?

- No → Open circuit in wire harness between terminals 19 of CC ECU and 5 of control switch.
- Yes ↓

INSPECT CONTROL SWITCH CIRCUIT
Is there continuity between terminal 18 and ground with control switch OFF?

- Yes → Short circuit in wire harness between terminals 18 of CC ECU and 4 of control switch.
- No ↓

Is there resistance as shown in table below between terminal 18 and ground when control switch is turned to each position?

- No → Open circuit in wire harness between terminals 18 of CC ECU and 4 of control switch.

Position	Resistance (Ω)
RES/ACC	Approx. 68
SET/COAST	Approx. 198
CANCEL	Approx. 418

- Yes ↓

Replace CC ECU. Then recheck system.

CC: Cruise Control

V05249

Downloaded from www.Manualslib.com manuals search engine

D ACTUATOR CIRCUIT

HINT: While carrying out the following inspection, make certain that the connectors and terminals are properly connected.

ACTUATOR

Disconnect connector from actuator and inspect connector on wire harness side as follows.

INSPECT GROUND CONNECTION
Is there continuity between terminal 4 and ground?

No → • Open circuit in wire harness between terminal 4 of actuator and ground.
• Ground faulty.

Yes ↓

INSPECT ACTUATOR
Is actuator operation normal?

No → Replace actuator. Then recheck system.

Yes ↓

STOP LIGHT SWITCH

INSPECT STOP LIGHT SWITCH INSTALLATION
Is stop light switch installed properly?

No → Reinstall stop light switch properly. Then recheck system.

Yes ↓

Connect connector to actuator.
Disconnect connector from stop light switch and inspect connector on wire harness side as follows.

INSPECT MAGNET CLUTCH CIRCUIT
Is there approx. 38.5 Ω between terminal 4 and ground?

No → Open or short circuit in wire harness between terminals 4 of stop light and 5 of actuator.

Yes ↓

INSPECT STOP LIGHT SWITCH
Is stop light switch operation normal?

No → Replace stop light switch. Then recheck system.

Yes ↓

CONTINUED ON NEXT PAGE

CC: Cruise Control

BE

V05250

Downloaded from www.Manualslib.com manuals search engine

CONTINUED FROM PREVIOUS PAGE

CC ECU

Connect connector to stop light switch.
Disconnect connectors from CC ECU and inspect connector on wire harness side as follows.

INSPECT MAGNET CLUTCH CIRCUIT
Is there approx. 38.5 Ω between terminal 10 and ground?

- No → Open or short circuit in wire harness between terminals 10 of CC ECU and 4 of actuator.
- Yes ↓

INSPECT MOTOR CIRCUIT
Is there continuity between terminal 12 and ground?

- Yes → Short circuit in wire harness between terminals 12 of CC ECU and 6 of actuator.
- No ↓

Is there continuity between terminal 11 and ground?

- Yes → Short circuit in wire harness between terminals 11 of CC ECU and 7 of actuator.
- No ↓

Is there continuity between terminals 11 and 12 with actuator arm in a position except max. open or max. close?

- No → Open circuit in wire harness between terminals 12 of CC ECU and 6 of actuator or between terminals 11 of CC ECU and 7 of actuator.
- Yes ↓

INSPECT POSITION CIRCUIT
Is there continuity between terminal 23 and ground?

- Yes → Short circuit in wire harness between terminals 23 of CC ECU and 1 of actuator.
- No ↓

Is there approx. 2 kΩ between terminals 23 and 25?

- No →
  - Open circuit in wire harness between terminals 25 of CC ECU and 3 of actuator.
  - Open circuit in wire harness between terminals 23 of CC ECU and 1 of actuator.
- Yes ↓

Does resistance change even between terminals 24 and 25?

- No → Open or short circuit in wire harness between terminals 24 of CC ECU and 2 of actuator.
- Yes ↓

Replace CC ECU. Then recheck system.

CC: Cruise Control

BE

Downloaded from www.Manualslib.com manuals search engine

E SPEED SENSOR CIRCUIT

HINT: While carrying out the following inspection, make certain that the connectors and terminals are properly connected.

SPEED SENSOR

Disconnect connector from speed sensor and inspect connector on wire harness side as follows.

INSPECT GROUND CONNECTION
Is there continuity between terminal 2 and ground?

No →
- Open circuit in wire harness between terminal 2 of speed sensor and ground.
- Ground faulty.

Yes ↓

INSPECT SPEED SENSOR
Is vehicle speed sensor operation normal?

No → Replace speed sensor. Then recheck system.

Yes ↓

CC ECU

Connect connector to speed sensor.
Disconnect connector from CC ECU and inspect connector on wire harness side as follows.

INSPECT SPEED SENSOR CIRCUIT
Is there continuity repeatedly between terminal 20 and ground?

No →
- Open or short circuit in wire harness between terminals 20 of CC ECU and 2 of speed sensor.

Yes ↓

Replace CC ECU. Then recheck system.

CC: Cruise Control

BE

W6252

Downloaded from www.Manualslib.com manuals search engine

F STOP LIGHT SWITCH CIRCUIT

HINT: While carrying out the following inspection, make certain that the connectors and terminals are properly connected.

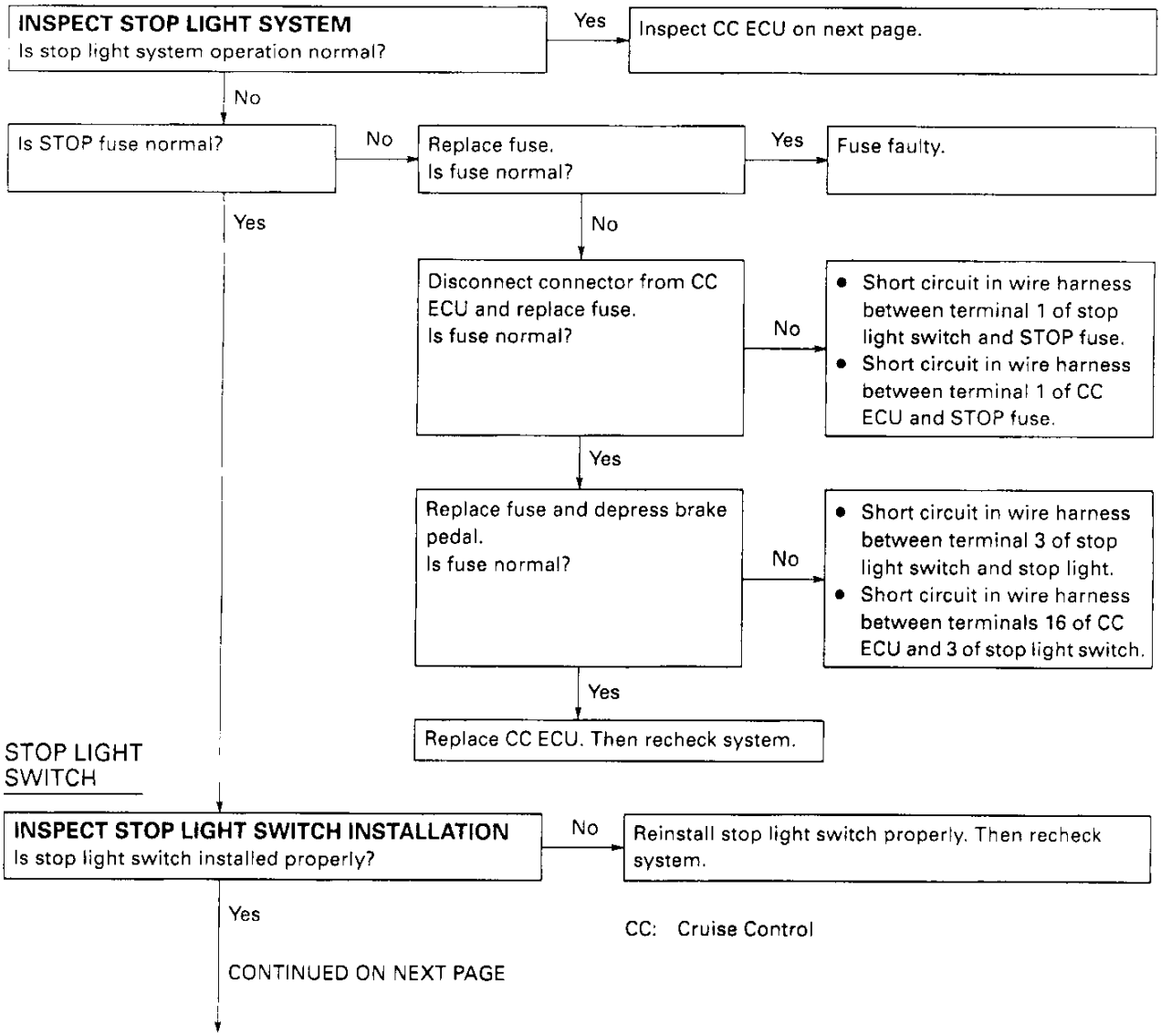

CC: Cruise Control

V05253

BE

Downloaded from www.Manualslib.com manuals search engine

STOP LIGHT SWITCH

CONTINUED FROM PREVIOUS PAGE

Disconnect connector from stop light switch and inspect connector on wire harness side as follows.

INSPECT POWER SOURCE
Is there battery voltage between terminal 1 and ground?

- No → Open circuit in wire harness between terminal 1 of stop light switch and STOP fuse.
- Yes ↓

INSPECT STOP LIGHT CIRCUIT
Connect terminal 1 and 3.
Do stop light lights up?

- No →
  - Open circuit in wire harness between terminal 3 of stop light switch and ground.
  - Ground faulty.
- Yes ↓

INSPECT STOP LIGHT SWITCH
Is stop switch operation normal?

- No → Replace stop light. Then recheck system.
- Yes ↓

CC ECU

Connect connector to stop light switch.
Disconnect connector from CC ECU and inspect connector on wire harness side as follows.

→ If stop light system operation is normal, start inspection from this step.

INSPECT STOP LIGHT SWITCH CIRCUIT
Is there battery voltage between terminal 1 and ground?

- No → Open circuit in wire harness between terminal 1 of CC ECU and STOP fuse.
- Yes ↓

Is there battery voltage between terminal 16 and ground when brake pedal depressed?

- No → Open circuit in wire harness between terminals 16 of CC ECU and 3 of stop light switch.
- Yes ↓

Replace CC ECU. Then recheck system.

CC: Cruise Control

BE

V05054

Downloaded from www.Manualslib.com manuals search engine

G PARKING BRAKE SWITCH CIRCUIT

HINT: While carrying out the following inspection, make certain that the connectors and terminals are properly connected.

INSPECT PARKING BRAKE SWITCH
Is parking brake switch operation normal?

- No → Replace parking brake switch. Then recheck system.
- Yes ↓

CC ECU

Connect connector to parking brake switch.
Disconnect connector from CC ECU and inspect connector on wire harness side as follows.

↓

INSPECT PARKING BRAKE SWITCH CIRCUIT
Is there continuity between terminal 3 and ground when parking brake lever is released?

- Yes → Short circuit in wire harness between terminal 3 of CC ECU and parking brake switch.
- No ↓

Is there continuity between terminal 3 and ground when parking brake lever is pulled?

- No → Open circuit in wire harness between terminal 3 of CC ECU and parking brake switch.
- Yes ↓

Replace CC ECU. Then recheck system.

CC: Cruise Control

BE

V05255

Downloaded from www.Manualslib.com manuals search engine

H CLUTCH SWITCH CIRCUIT (with M/T)

HINT: While carrying out the following inspection, make certain that the connectors and terminals are properly connected.

CLUTCH SWITCH

INSPECTION CLUTCH SWITCH INSTALLATION
Is clutch switch installed properly?

- No → Reinstall clutch switch properly. Then recheck system.
- Yes ↓

Disconnect connector from clutch switch and inspect connector on wire harness side as follows.

INSPECT GROUND CONNECTION
Is there continuity between terminal 1 and ground?

- No →
  - Open circuit in wire harness between terminal 1 of clutch switch and ground.
  - Ground faulty.
- Yes ↓

INSPECT CLUTCH SWITCH
Is clutch switch operation normal?

- No → Replace clutch switch. Then recheck system.
- Yes ↓

CC ECU

Connect connector to switch.
Disconnect connector from CC ECU and inspect connector on wire harness side as follows.

INSPECT CLUTCH SWITCH CIRCUIT
Is there battery voltage between terminal 2 and ground when clutch pedal released?

- No → Open circuit in wire harness between terminal 2 of CC ECU and 2 of GAUGE fuse.
- Yes ↓

Replace CC ECU. Then recheck system.

CC: Cruise Control

BE

V05256

Downloaded from www.Manualslib.com manuals search engine

I NEUTRAL START SWITCH (A/T Models)

HINT: While carrying out the following inspection, make certain that the connectors and terminals are properly connected.

INSPECT STARTING SYSTEM
Is starting system normal?

No → Repair starting system. Then recheck system.

Yes ↓

CC ECU

Disconnect connector from CC ECU and inspect connector on wire harness side as follows.

NEUTRAL START SWITCH CIRCUIT
Is there battery positive voltage between terminal 2 and ground when shift lever is shifted to D range?

No → Open circuit in wire harness between terminals 2 of CC ECU and 2 of park/neutral position switch.

Yes ↓

Replace CC ECU. Then recheck system.

CC: Cruise Control

BE

J ELECTRONICALLY CONTROLLED TRANSMISSION SOLENOID No.2 CIRCUIT (with A/T)

HINT: While carrying out the following inspection, make certain that the connectors and terminals are properly connected.

INSPECT ELECTRONIC CONTROLLED TRANSMISSION SYSTEM
Is electronic controlled transmission system normal.

No → Repair electronic controlled transmission system. Then recheck system.

Yes ↓

CC ECU

Disconnect connector from CC ECU and inspect connector on wire harness side as follows.

INSPECT No.2 SOLENOID CIRCUIT
Is there approx. 13 Ω between terminal 22 and ground?

No → Open or short circuit in wire harness between terminal 22 of CC ECU and No.2 solenoid.

Yes ↓

Replace CC ECU. Then recheck system.

CC: Cruise Control

A05257

Downloaded from www.Manualslib.com manuals search engine

K IDL SIGNAL CIRCUIT

HINT: While carrying out the following inspection, make certain that the connectors and terminals are properly connected.

THROTTLE POSITION SENSOR

INSPECT THROTTLE POSITION SENSOR ADJUSTMENT
Is throttle position sensor adjustment normal?
- No → Adjust position sensor position. Then recheck system.
- Yes ↓

INSPECT THROTTLE POSITION SENSOR
Is throttle position sensor operation normal?
- No → Replace throttle position. Then recheck system.
- Yes ↓

CC ECU

Connect connector to throttle position sensor. Disconnect connector from CC ECU and inspect connector on wire harness side as follows.

INSPECT IDL SIGNAL CIRCUIT
Is there continuity between terminal 21 and ground when acceleration pedal is released?
- No → Open circuit in wire harness between terminals 21 of CC ECU and 2 of throttle position sensor.
- Yes ↓

Is there continuity between terminal 21 and ground when acceleration pedal is depressed?
- Yes → Short circuit in wire harness between terminals 21 of CC ECU and 2 of throttle position sensor.
- No ↓

Replace CC ECU. Then recheck system.

CC: Cruise Control

BE

V05253

Downloaded from www.Manualslib.com manuals search engine

Wire Harness Side

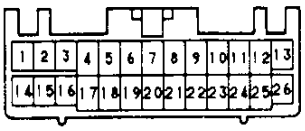

Vd-26-1-B Z10701

CRUISE CONTROL ECU INSPECTION

BE1XV-04

INSPECT CRUISE CONTROL ECU CIRCUIT

Disconnect connector and inspect connector on wire harness side as shown in the chart.

Tester connection to terminal number	Condition	Specified value (Continuity)
3 – Ground	Parking brake lever position released	No continuity
3 – Ground	Parking brake lever position pulled	Continuity
19 – Ground	Main switch position released	No continuity
19 – Ground	Main switch position depressed	Continuity
11 – 12	Actuator arm position max. OPEN	(12 → 11) No continuity
11 – 12	Actuator arm position max. OPEN	(11 → 12) Continuity
11 – 12	Actuator arm position max. CLOSE	(11 → 12) No continuity
11 – 12	Actuator arm position max. CLOSE	(12 → 11) Continuity
11 – 12	Actuator arm is any position except above positions	(11 ↔ 12) Continuity
12 – Ground	Constant	No continuity
13 – Ground	Constant	Continuity
1 – 16	Brake pedal released	No continuity
1 – 16	Brake pedal depressed	Continuity

BE

Tester connection to terminal number	Condition	Specified value (Resistance)
18 – Ground	Control switch position OFF	No continuity
18 – Ground	Control switch position RES/ACC	Approx. 68 Ω
18 – Ground	Control switch position SET/COAST	Approx. 198 Ω
18 – Ground	Control switch position CANCEL	Approx. 418 Ω
22 – Ground	Constant	Approx. 13 Ω
23 – 25	Constant	Approx. 2 kΩ
24 – 25	Actuator arm turned	Resistance change linear

Downloaded from www.Manualslib.com manuals search engine

Tester connection to terminal number	Condition	Specified value (Voltage)
1 — Ground	Constant	Battery voltage
2 — Ground	Ignition switch position ON Clutch pedal position released (M/T)	Battery voltage
2 — Ground	Ignition switch position ON Clutch pedal position depressed (M/T)	No voltage
2 — Ground	Shift lever position at D (A/T)	Battery voltage
2 — Ground	Shift lever position except at D (A/T)	No voltage
7 — Ground	Ignition switch position at LOCK or ACC	No voltage
7 — Ground	Ignition switch position ON	Battery voltage
14 — Ground	Ignition switch position at LOCK or ACC	No voltage
14 — Ground	Ignition switch position ON	Battery voltage
16 — Ground	Brake pedal released	No voltage
16 — Ground	Brake pedal depressed	Battery voltage
20 — Ground	With ignition switch ON, speedometer shaft or speed sensor shaft turned.	Voltage changes repeatedly

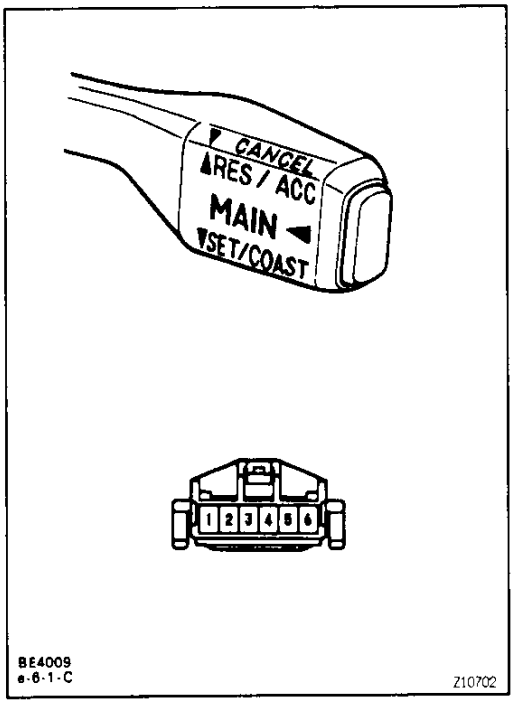

CRUISE CONTROL SWITCH INSPECTION

BE1XW-08

INSPECT CRUISE CONTROL SWITCH

(a) Check continuity between terminals 3 and 5.

Main switch position	Condition
OFF	No continuity
ON	Continuity

(b) Measure resistance between terminals 3 and 4.

Control switch position	Resistance (Ω)
OFF	∞ (No continuity)
RES/ACC	Approx. 68
SET/COAST	Approx. 198
CANCEL	Approx. 418

If resistance value is not as specified, replace the control switch.

Downloaded from www.Manualslib.com manuals search engine

PARKING BRAKE SWITCH INSPECTION

BE1XX-03

INSPECT PARKING BRAKE SWITCH

See Brake Warning System on page BE—70.

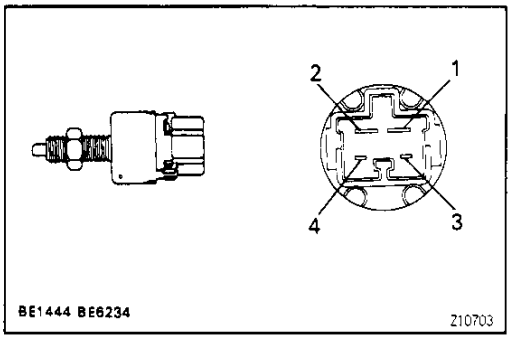

STOP LIGHT SWITCH INSPECTION

BE1XY-03

INSPECT STOP LIGHT SWITCH CONTINUITY

Switch position	Tester connection to terminal number	Specified value
Switch pin free (Pedal depressed)	1 — 2	Continuity
Switch pin pushed in (Pedal released)	3 — 4	Continuity

If continuity is not as specified, replace the stop light switch.

BE

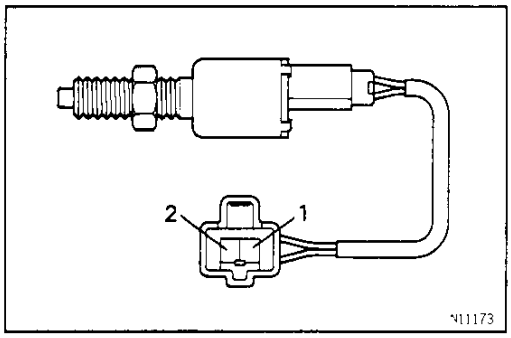

CLUTCH SWITCH INSPECTION

BE1XZ-04

INSPECT CLUTCH SWITCH CONTINUITY

Switch position	Tester connection to terminal number	Specified value
Switch pin free (Pedal depressed)	—	No continuity
Switch pin pushed in (Pedal released)	1 — 2	Continuity

If continuity is not as specified, replace the switch.

Downloaded from www.Manualslib.com manuals search engine

NEUTRAL START SWITCH INSPECTION

INSPECT NEUTRAL START SWITCH
See AX Section

SPEED SENSOR INSPECTION

INSPECT SPEED SENSOR
See page BE−65

ACTUATOR INSPECTION

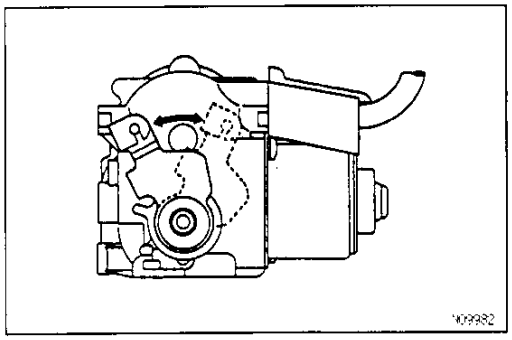

1. INSPECT ACTUATOR MAGNETIC CLUTCH

(a) Check that the arm can be moved smoothly by hand.

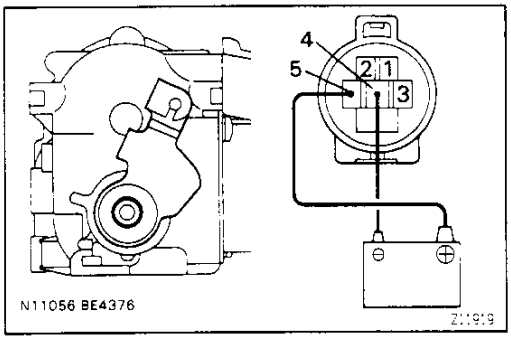

(b) Connect the positive (+) lead from the battery to terminal 5 and the negative (−) lead to terminal 4. (Magnetic Clutch turned ON)

(c) Check that the arm cannot be moved by hand.
If operation is not as specified, replace the motor.

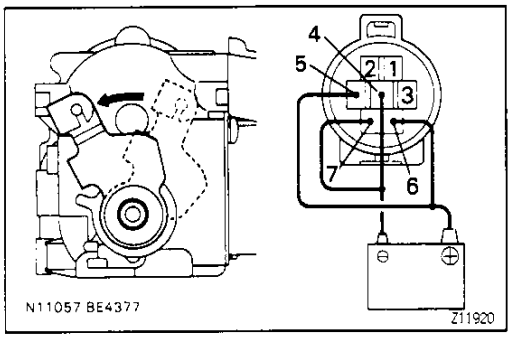

2. INSPECT ACTUATOR MOTOR

(a) With the magnetic clutch ON, connect the positive (+) lead from the battery to terminal 6, and the negative (−) lead to terminal 7, check that the arm moves to the open side.

(b) When the arm reached to the open position, check that the motor operation stops.

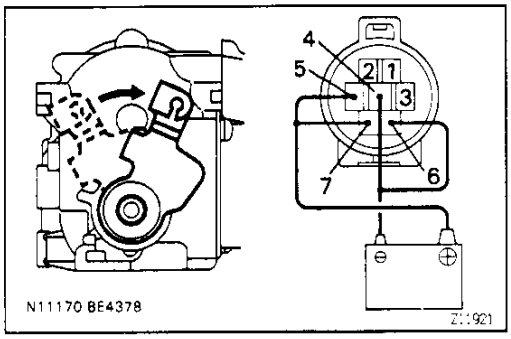

(c) With the magnetic clutch ON, connect the positive (+) lead from the battery to terminal 7 and the negative (−) lead to terminal 6, check that the arm moves to the close side.

(d) When the arm reaches to the closed position, check that the motor operation stops.

Downloaded from www.Manualslib.com manuals search engine

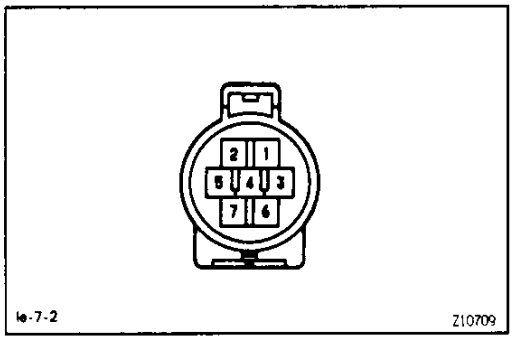

3. INSPECT POSITION SENSOR

(a) Measure the resistance between terminals 1 and 3.
Resistance: Approx. 2.0 kΩ

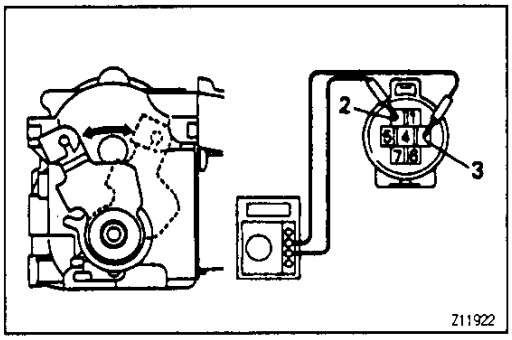

(b) When the arm moving from the closed to open position, check that resistance between terminals 2 and 3 increases from approx. 530 Ω to 2.0 kΩ
If operation is not as specified, replace the motor.

BE1V5-05

THROTTLE POSITION SENSOR INSPECTION

INSPECT THROTTLE POSITION SENSOR
See Engine Repair Manual

BE

Downloaded from www.Manualslib.com manuals search engine

AUDIO SYSTEM
PARTS LOCATION

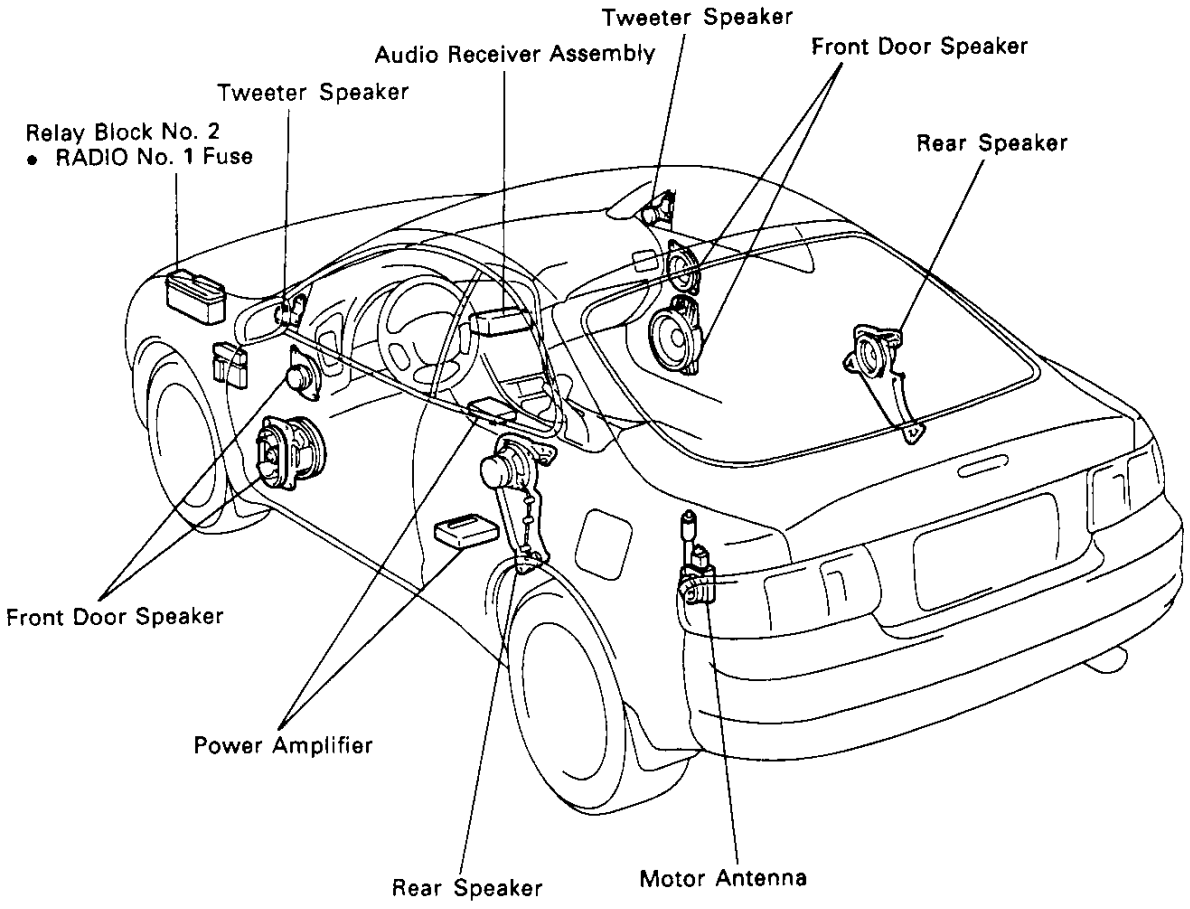

Downloaded from www.Manualslib.com manuals search engine

BE1E2-03

SYSTEM DESCRIPTION

1. RADIO WAVE BAND

The radio wave bands used in radio broadcasting are as follows:

Frequency	30 kHz	300kHz	3 MHz	30 MHz	300 MHz
Designation	LF	MF	HF	VHF	
Radio wave		AM		FM	
Modulation method	Amplitude modulation			Frequency modulation	

LF: low Frequency MF: Medium Frequency HF: High Frequency VHF: Very High Frequency

V03941

BE

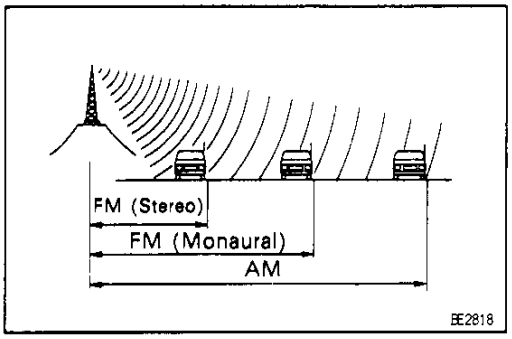

2. SERVICE AREA

There are great differences in the size of the service area for AM, FM monaural, and FM stereo broadcasts cannot be received even though AM comes in very clearly.

Not only does FM stereo have the smallest service area, but it also picks up static and other types of interference ("noise") easily.

Downloaded from www.Manualslib.com manuals search engine

3. RECEPTION PROBLEMS

Besides the problem of static, there are also the problems called "fading", "multipath" and "fade out". These problems are caused not by electrical noise but by the nature of the radio waves themselves.

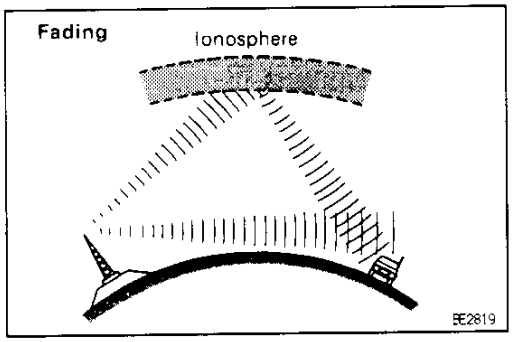

Fading

Besides electrical interference, AM broadcasts are also susceptible to other types of interference, especially at night. This is because AM radio waves bounce off the ionosphere at night. These radio waves then interfere with the signals from the same transmitter that reach the vehicle's antenna directly. This type of interference is called "fading".

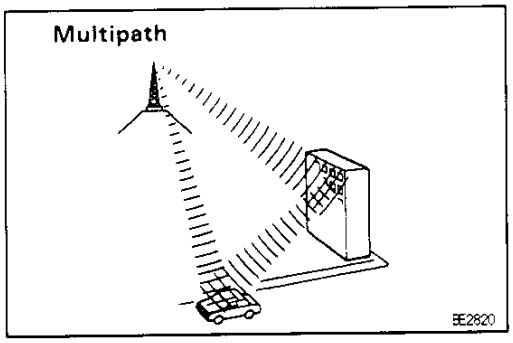

Multipath

One type of interference caused by the bouncing of radio waves off of obstructions is called "multipath". Multipath occurs when a signal from the broadcast transmitter antenna bounces off buildings and mountains and interferes with the signal that is received directly

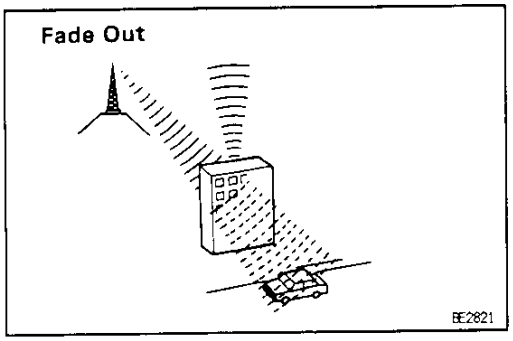

Fade Out

Because FM radio waves are of higher frequencies than AM radio waves, they bounce off buildings, mountains, and other obstructions. For this reason, FM signals often seem to gradually disappear or fade away as the vehicle goes behind a building or other obstruction. This is called "fade out".

BE23W-01

MAINTENANCE

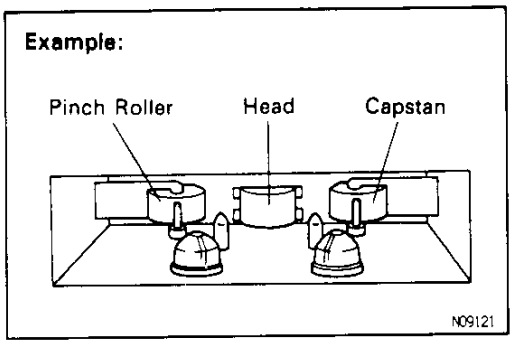

Tape Player/Head Cleaning

(a) Raise the cassette door with your finger.
Next using a pencil or like object, push in the guide.

(b) Using a cleaning pen or cotton applicator soaked in cleaner, clean the head surface, punch rollers and capstans.

Downloaded from www.Manualslib.com manuals search engine

TROUBLESHOOTING

BE32X-01

NOTICE: When replacing the internal mechanism (computer part) of the audio system, be careful that no part of your body or clothing comes in contact with the terminals of the leads from the IC, etc. of the replacement part (spare part).

HINT: This inspection procedure is a simple troubleshooting which should be carried out on the vehicle during system operation and was prepared on the assumption of system component troubles (except for the wires and connectors, etc.).

Always inspect the trouble taking the following items into consideration.

- Open or short circuit of the wire harness
- Connector or terminal connection fault

	Problem	No.
Radio	No power coming in.	1
	Power coming in, but radio not operating.	2
	Noise present, but AM — FM not operating.	3
	Either speaker does not work.	4
	Either AM or FM does not work.	5
	Reception poor (Volume faint).	5
	Few preset tuning bands.	5
	Sound quality poor.	6
	Cannot set station select button.	7
	Preset memory disappears.	7
Tape Player	Cassette tape cannot be inserted.	8
	Cassette tape inserts, but no power.	9
	Power coming in, but tape player not operating.	10
	Either speaker does not work.	11
	Sound quality poor (Volume faint).	12
	Tape jammed, malfunction with tape speed or auto—reverse.	13
	APS, SKIP, RPT buttons not operating.	14
	Cassette tape will not eject.	15
Antenna	Antenna — related.	16
Noise	Noise produced by vibration or shock while driving.	17
	Noise produced when engine starts.	18

Downloaded from www.Manualslib.com manuals search engine

1 Radio — NO POWER COMING IN

R : w/o Tape Player S : Radio – Tape Player (Separate) U : Radio – Tape Player Unit

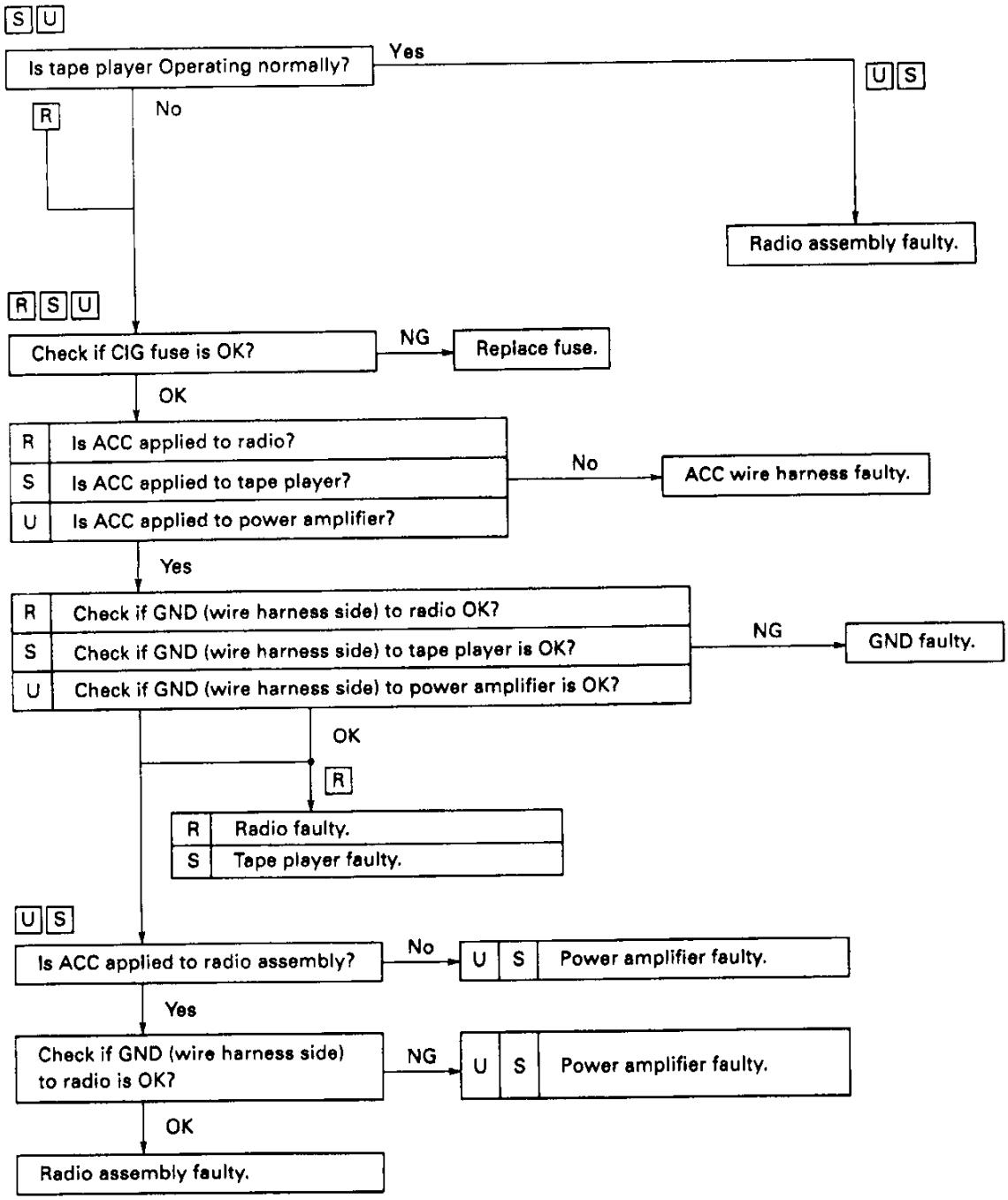

BE

V05259

Downloaded from www.Manualslib.com manuals search engine

2	Radio	POWER COMING IN, BUT RADIO NOT OPERATING

R: w/o Tape Player S: Radio – Tape Player (Separate) U: Radio – Tape Player Unit

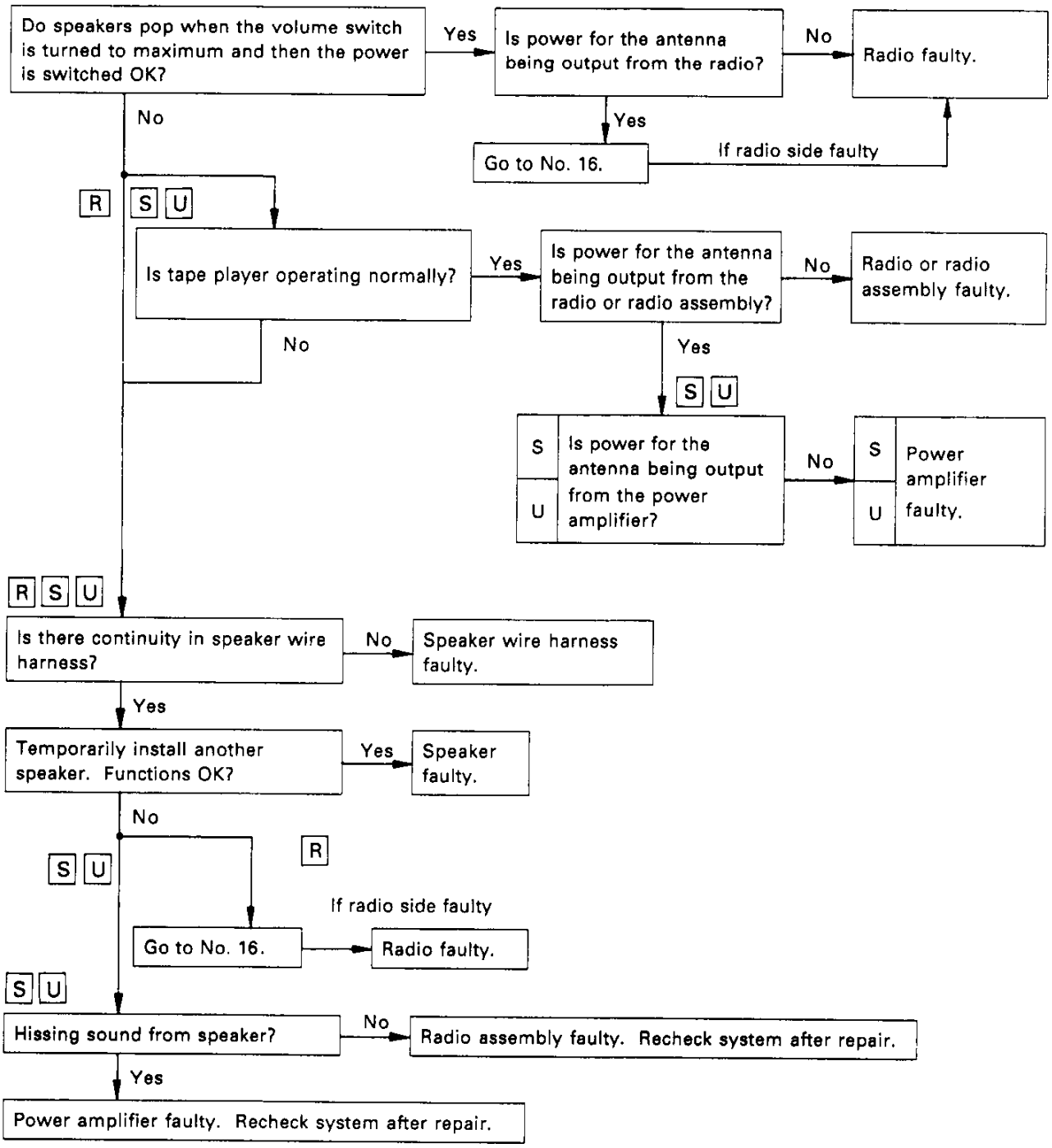

V05260

BE

Downloaded from www.Manualslib.com manuals search engine

3 Radio — NOISE PRESENT, BUT AM-FM NOT OPERATING

R: w/o Tape Player S: Radio – Tape Player (Separate) U: Radio – Tape Player Unit

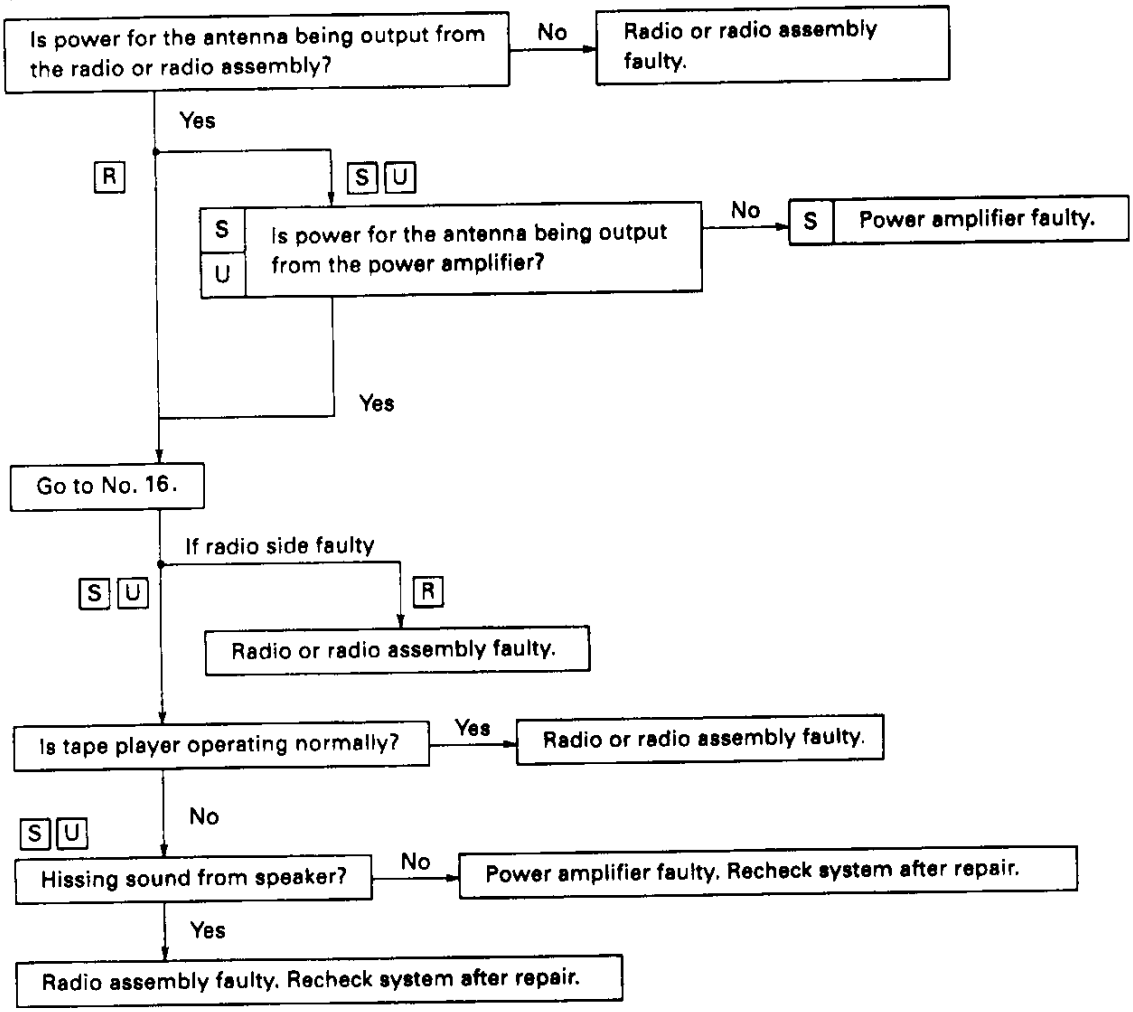

BE

V05261

Downloaded from www.Manualslib.com manuals search engine

4	Radio	EITHER SPEAKER DOES NOT WORK

R: w/o Tape Player S: Radio – Tape Player (Separate) U: Radio – Tape Player Unit

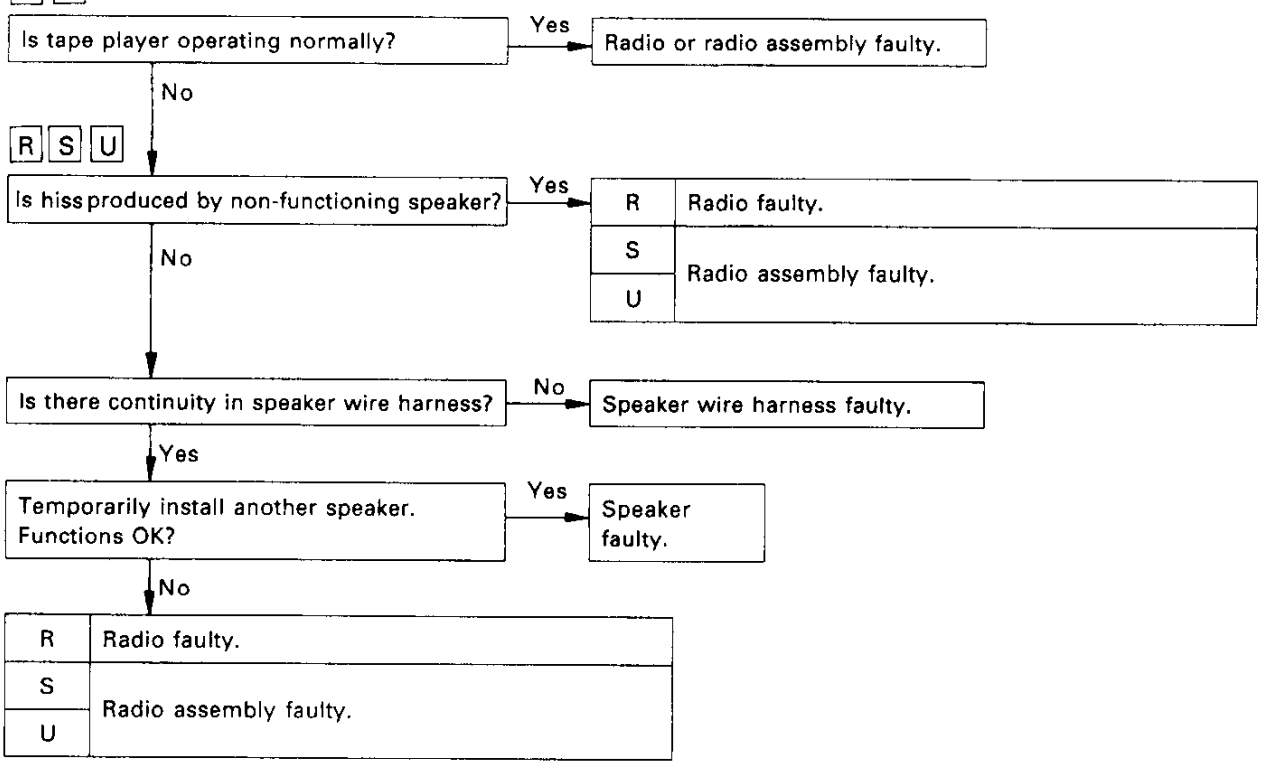

BE

5	Radio	EITHER AM OR FM DOES NOT WORK, RECEPTION POOR (VOLUME FAINT), FEW PRESET TUNING BANDS

R: w/o Tape Player S: Radio – Tape Player (Separate) U: Radio – Tape Player Unit

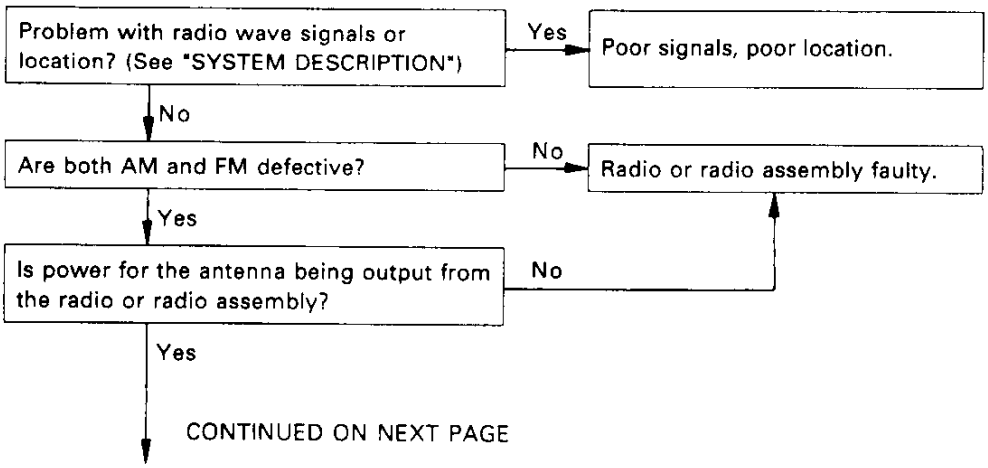

CONTINUED ON NEXT PAGE

V05262

Downloaded from www.Manualslib.com manuals search engine

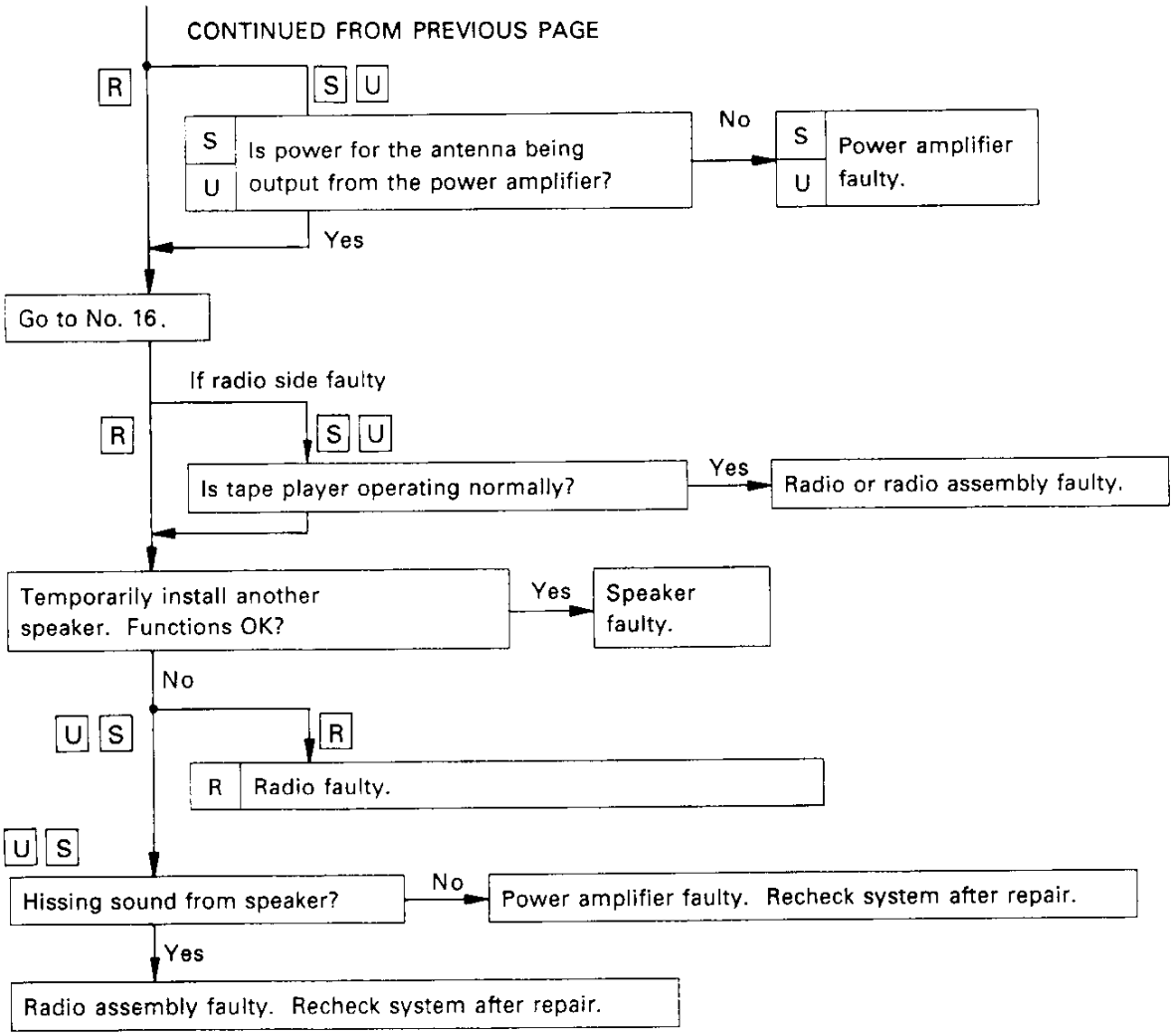

6	Radio	SOUND QUALITY POOR

R: w/o Tape Player **S: Radio – Tape Player (Separate)** **U: Radio – Tape Player Unit**

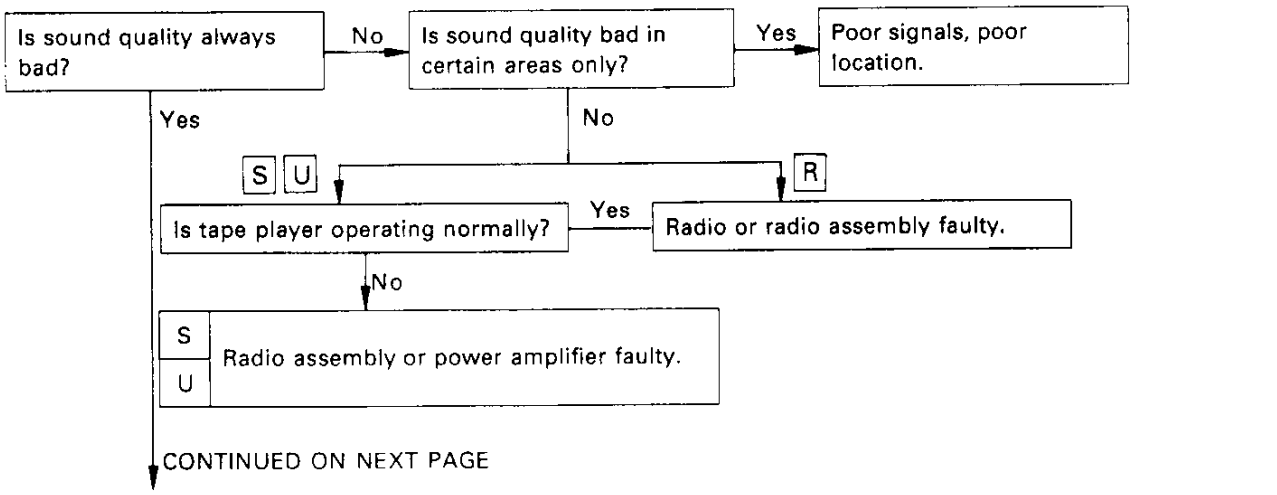

V05263

BE

Downloaded from www.Manualslib.com manuals search engine

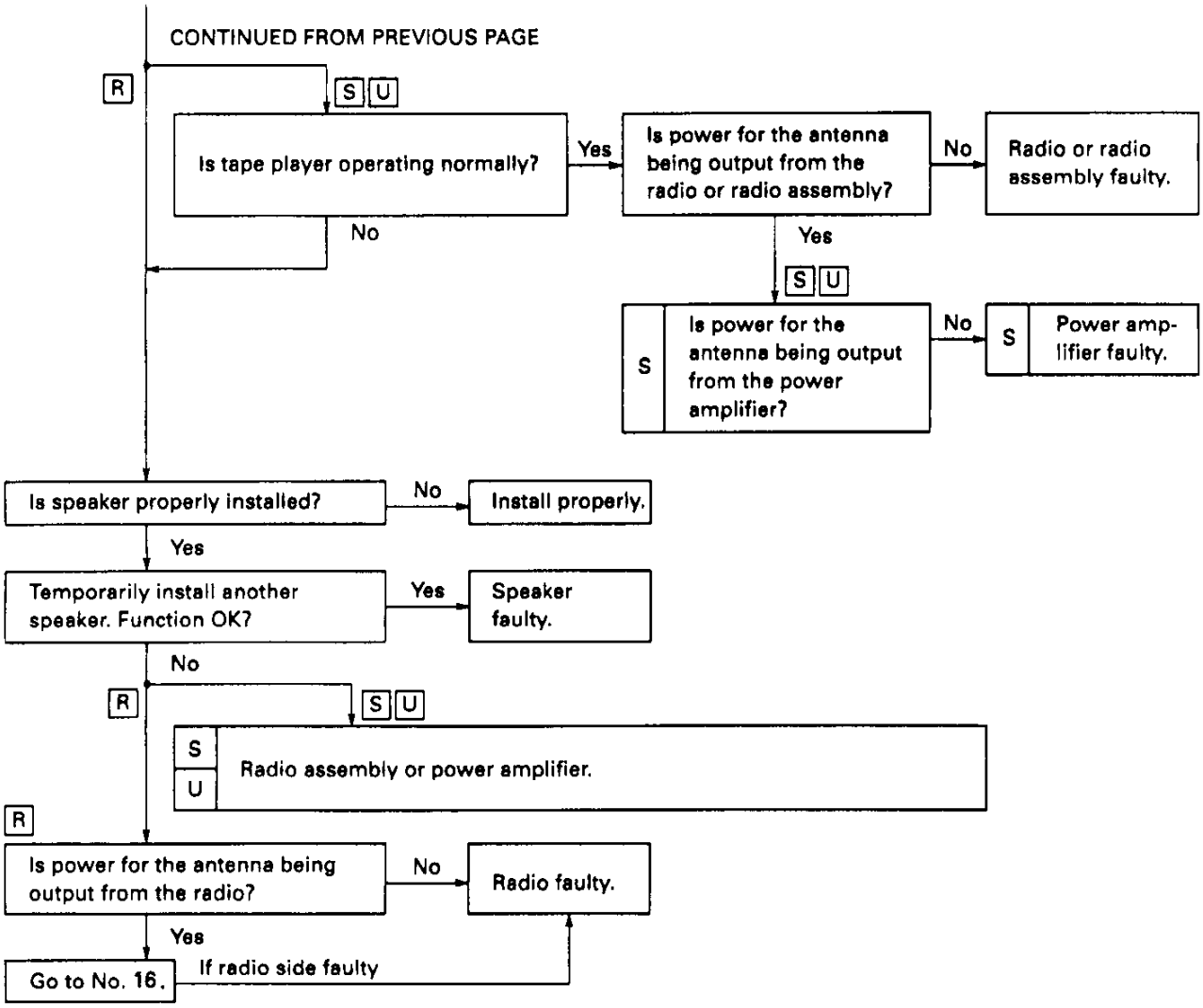

BE

7	Radio	CANNOT SET STATION SELECT BUTTON, PRESET MEMORY DISAPPEARS

R: w/o Tape Player S: Radio – Tape Player (Separate) U: Radio – Tape Player Unit

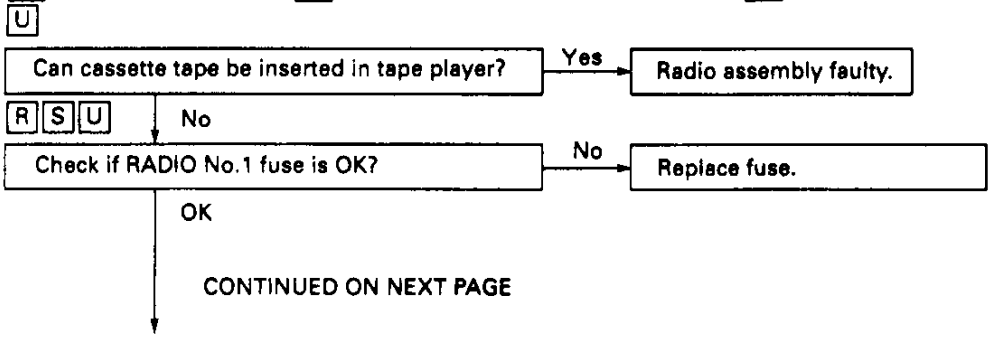

V05264

Downloaded from www.Manualslib.com manuals search engine

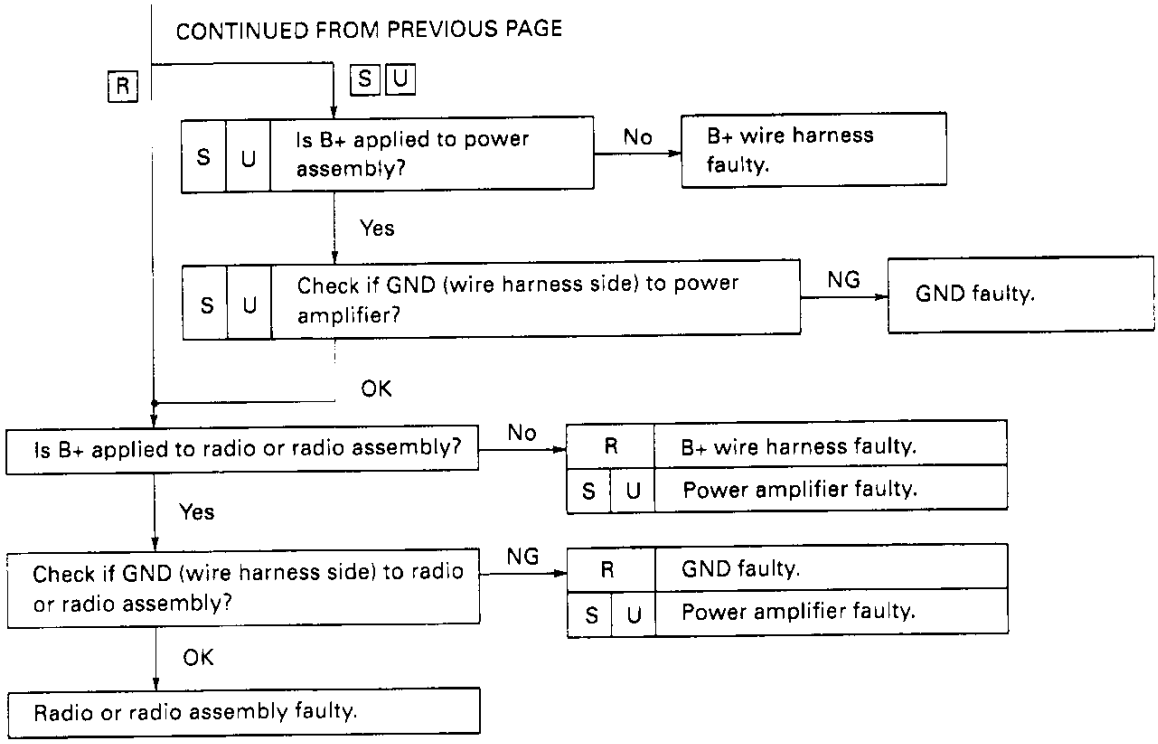

BE

8 Tape Player CASSETTE TAPE CANNOT BE INSERTED

S : Radio – Tape Player (Separate) **U : Radio – Tape Player Unit**

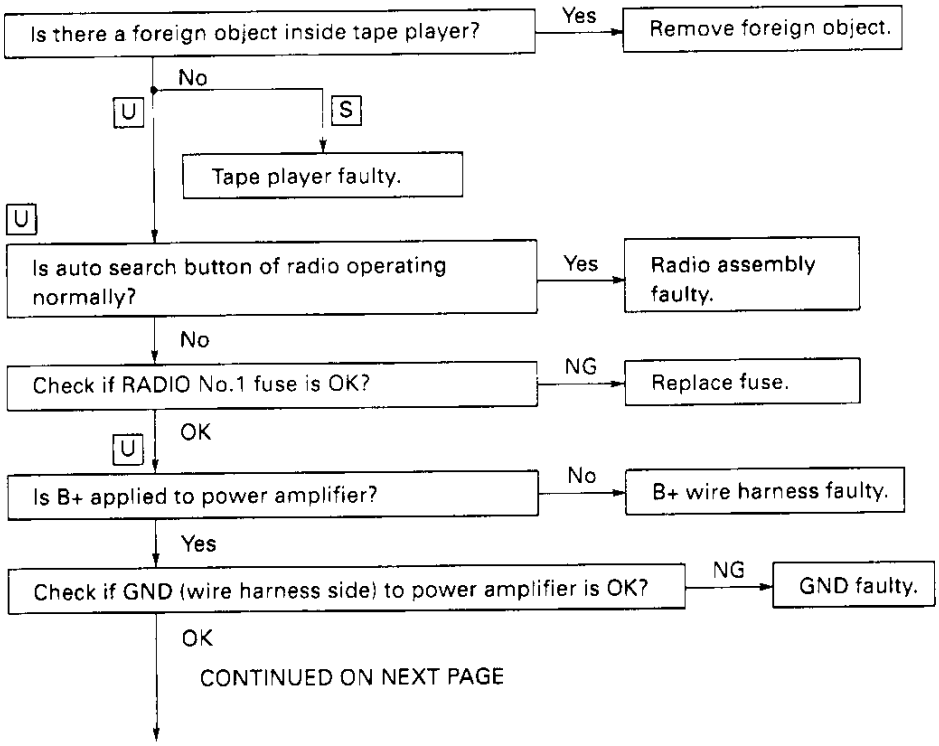

V05065

Downloaded from www.Manualslib.com manuals search engine

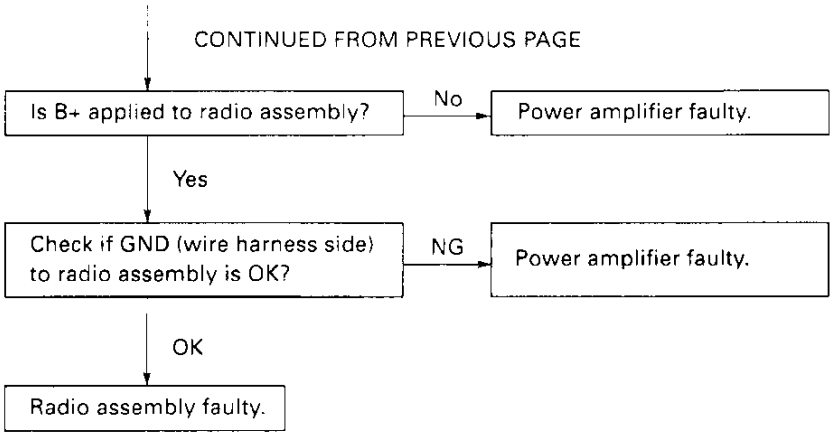

9 Tape Player — CASSETTE TAPE INSERTS, BUT NO POWER

S : Radio – Tape Player (Separate) **U : Radio – Tape Player Unit**

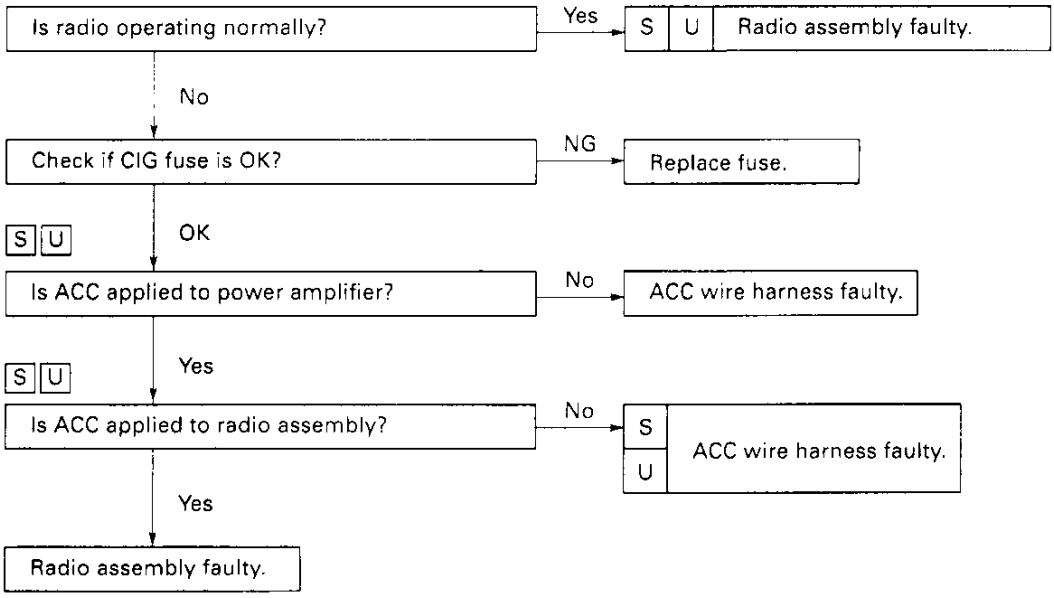

BE

V05266

Downloaded from www.Manualslib.com manuals search engine

10 Tape Player — POWER COMING IN, BUT TAPE PLAYER NOT OPERATING

S: Radio – Tape Player (Separate) **U**: Radio – Tape Player Unit

- Functions OK if different cassette tape inserted?
  - Yes → Cassette tape faulty.
  - No ↓
- Is radio operating normally?
  - Yes → S U Radio assembly faulty.
  - No ↓
- Is there continuity in speaker wire harness?
  - No → Speaker wire harness faulty.
  - Yes ↓
- Temporarily install another speaker. Functions OK?
  - Yes → Speaker faulty.
  - No ↓
  - U → S
  - S → S Radio assembly faulty.
- S U Hissing sound from speaker?
  - No → Power amplifier faulty. Recheck system after repair.
  - Yes ↓
- Radio assembly faulty. Recheck system after repair.

11 Tape Player — EITHER SPEAKER DOES NOT WORK

S: Radio – Tape Player (Separate) **U**: Radio – Tape Player Unit

- Is radio operating normally?
  - Yes → S U Radio assembly faulty.
  - No ↓
- Is hiss produced by non-functioning speaker?
  - Yes → S U Radio assembly faulty.
  - No ↓
- Is there continuity in speaker wire harness?
  - No → Speaker wire harness faulty.
  - Yes ↓

CONTINUED ON NEXT PAGE

V05267

Downloaded from www.Manualslib.com manuals search engine

CONTINUED FROM PREVIOUS PAGE

Temporarily install another speaker. Functions OK?
- Yes → Speaker faulty.
- No →
  - S: Tape player faulty.
  - U: Radio assembly faulty.

12 Tape Player — SOUND QUALITY POOR (VOLUME FAINT)

S: Radio – Tape Player (Separate) **U: Radio – Tape Player Unit**

Function OK if different cassette tape inserted?
- Yes → Cassette tape faulty.
- No ↓

Operates normally after cleaning the heads? (See MAINTENANCE)
- Yes → Head dirty.
- No ↓

Is radio operating normally?
- Yes → S, U: Radio assembly faulty.
- No ↓

Is speaker properly installed?
- No → Install properly.
- Yes ↓

Temporarily install another speaker. Functions OK?
- Yes → Speaker faulty.
- No →
  - S, U: Radio assembly faulty.

BE

Downloaded from www.Manualslib.com manuals search engine

13 Tape Player — TAPE JAMMED, MALFUNCTION WITH TAPE SPEED OR AUTO-REVERSE

S : Radio – Tape Player (Separate) U : Radio – Tape Player Unit

- Functions OK if different tape (less than 120 mins.) is inserted? — Yes → Cassette tape faulty.
- No ↓
- Is there a foreign object inside tape player? — Yes → Remove foreign object.
- No ↓
- Operates normally after cleaning the heads? (See MAINTENANCE) — Yes → Head dirty.
- No ↓
- S U Radio assembly faulty.

14 Tape Player — APS, SKIP RPT BUTTONS NOT OPERATING

- Functions OK is different cassette tape inserted? — No → Radio assembly faulty.
- Yes ↓
- Cassette tape faulty. (less than 3 secs. of silence between songs (APS, RPT), or less than 15 secs. of silence (SKIP)).

15 Tape Player — CASSETTE TAPE WILL NOT EJETCT

S : Radio – Tape Player (Separate) U : Radio – Tape Player Unit

- Is tape player operating normally? — No → Cassette tape jammed.
- S U Yes ↓
- Is auto search button of radio operating normally? — Yes → Radio assembly faulty.
- No ↓
- Check if RADIO No.1 fuse is OK? — NG → Replace fuse.
- OK ↓

CONTINUED ON NEXT PAGE

V05339

Downloaded from www.Manualslib.com manuals search engine

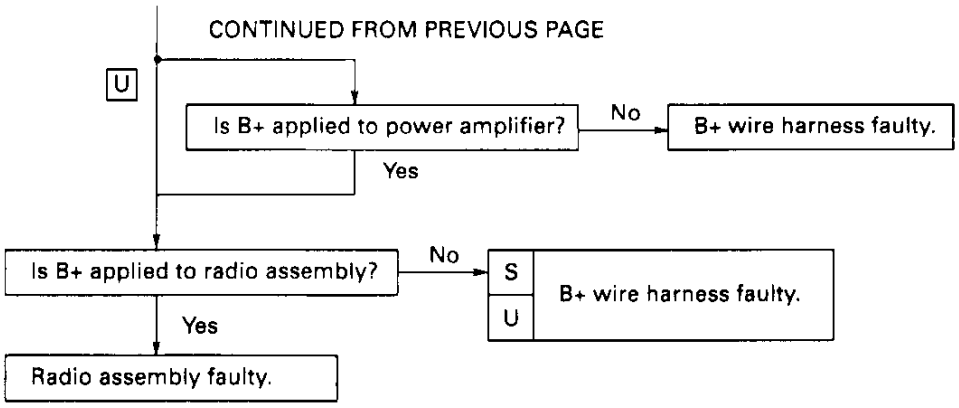

BE

V05269

Downloaded from www.Manualslib.com manuals search engine

16	Antenna	ANTENNA-RELATED

P : Antenna w/o Motor M : Motor Antenna

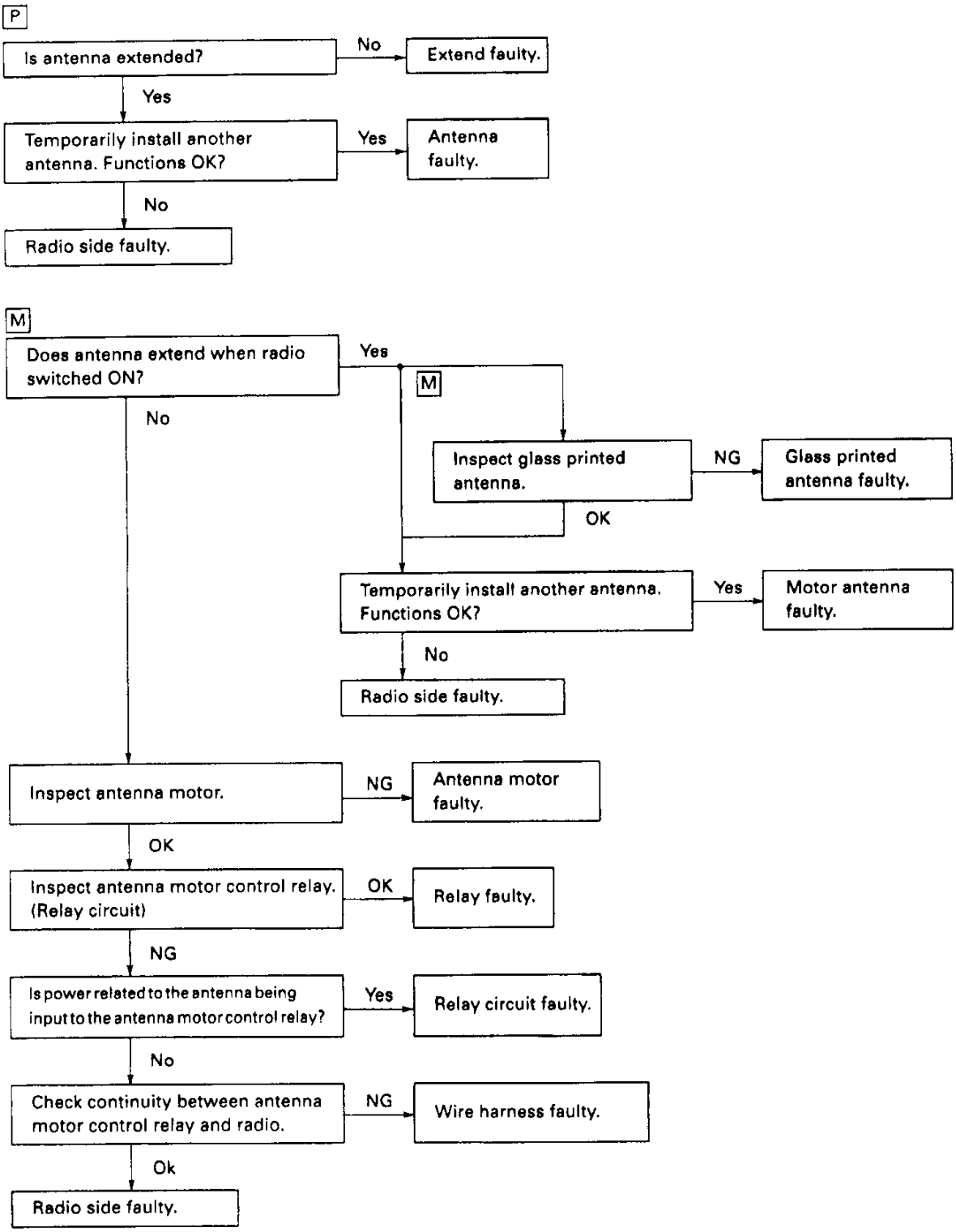

V05340

BE

Downloaded from www.Manualslib.com manuals search engine

17 Noise — NOISE PRODUCED BY VIBRATION OR SHOCK WHILE DRIVING

- Is speaker properly installed? — No → Install properly.
- Yes ↓
- Is each system correctly installed? — No → Install properly.
- Yes ↓
- With vehicle stopped, lightly tap each system. Is noise produced? — Yes → Each system faulty.
- No ↓
- Noise produced by static electricity accumulating in the vehicle body.

18 Noise — NOISE PRODUCED WHEN ENGINE STARTS

- Whistling noise which becomes high-pitched when accelerator strongly depressed, disappears shortly after engine stops. — Yes → Alternator noise.
- No ↓
- Whining noise occurs when A/C is operating. — Yes → A/C noise.
- No ↓
- Scratching noise occurs during sudden acceleration, driving on rough roads or when ignition switch is turned on. — Yes → Fuel gauge noise.
- No ↓
- Clicking sound heard when horn button is pressed, then released. Whirring/grating sound when pushed continuously. — Yes → Horn noise.
- No ↓
- Murmuring sound, stops when engine stops. — Yes → Ignition noise.
- No ↓
- Tick-tock noise, occurs in co-ordination with blinking of flasher. — Yes → Turn signal noise.
- No ↓
- Noise occurs during window washer operation. — Yes → Washer noise.
- No ↓
- Scratching noise occurs while engine is running, continues a while even after engine stops. — Yes → Engine coolant temp. gauge noise.
- No ↓
- Scraping noise in time with wiper beat. — Yes → Wiper noise.
- No ↓
- Other type of noise.

BE

V05341

Downloaded from www.Manualslib.com manuals search engine

BE1Z3-02

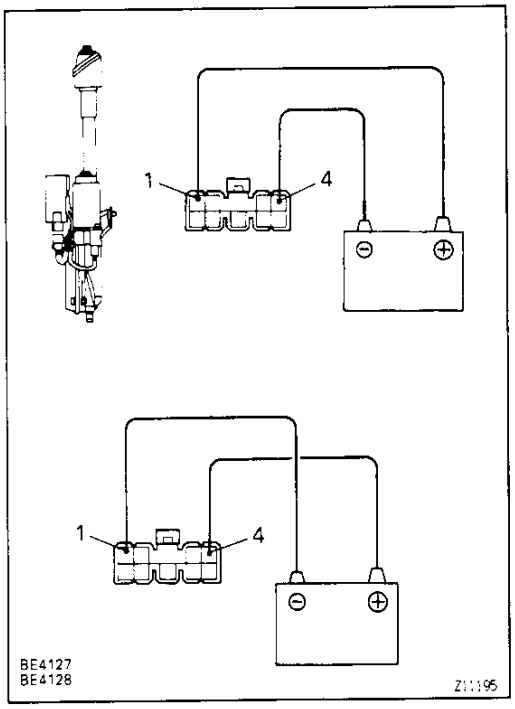

ANTENNA MOTOR INSPECTION

INSPECT ANTENNA MOTOR

(a) Connect the positive (+) lead from battery to terminal 1 and the negative (−) lead to terminal 4.

(b) Check that the motor turns (moves upward).
NOTICE: These tests must be performed quickly (within 3 – 5 seconds) to prevent the coil from burning out.

(c) Then, reverse the polarity, check that the motor turns the opposite way (moves downward).
NOTICE: These tests must be performed quickly (within 3 – 5 seconds) to prevent the coil from burning out.

BE

Downloaded from www.Manualslib.com manuals search engine

Wire Harness Side

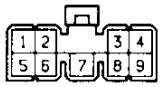

G-9-1 Z11196

BE1HW-03

ANTENNA MOTOR CONTROL RELAY INSPECTION

INSPECT ANTENNA MOTOR CONTROL RELAY

Relay Circuit

Disconnect the connector from the relay and inspect the connector on wire harness side, as shown in the chart below.

Tester connection to terminal number	Condition	Specified value (Continuity)
1 — 4	Constant	Continuity
2 — Ground	Constant	Continuity

Tester connection to terminal number	Condition	Specified value (Voltage)
3 — Ground	Constant	Battery voltage
5 — Ground	Ignition switch position LOCK	No voltage
5 — Ground	Ignition switch position ACC or ON	Battery voltage
6 — Ground	Ignition switch position LOCK	No voltage
6 — Ground	Ignition switch position ACC or ON (Radio switch and cassette OFF)	No voltage
6 — Ground	Ignition switch position ACC or ON (Radio switch or cassette ON)	Battery voltage
8 — Ground	Ignition switch position LOCK	No voltage
8 — Ground	Ignition switch position ACC or ON (Radio switch OFF or cassette ON)	No voltage
8 — Ground	Ignition switch position ACC or ON (Radio switch ON and cassette OFF)	Battery voltage
9 — Ground	Ignition switch position LOCK or ACC	No voltage
9 — Ground	Ignition switch position ON	Battery voltage

If circuit is as specified, replace the relay.

Downloaded from www.Manualslib.com manuals search engine

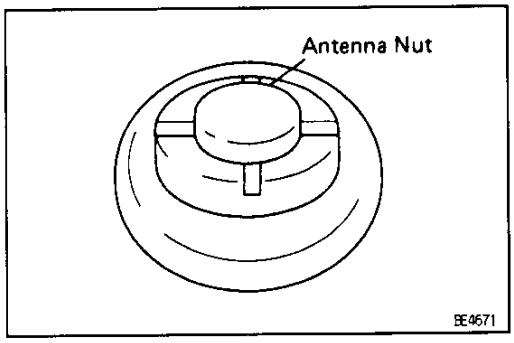

ANTENNA ROD REMOVAL AND INSTALLATION

1. REMOVE ANTENNA ROD

HINT: Perform this operation with the negative (−) terminal cable connected to the battery.

(a) Turn the ignition switch to "LOCK" position.

(b) Remove the antenna nut.

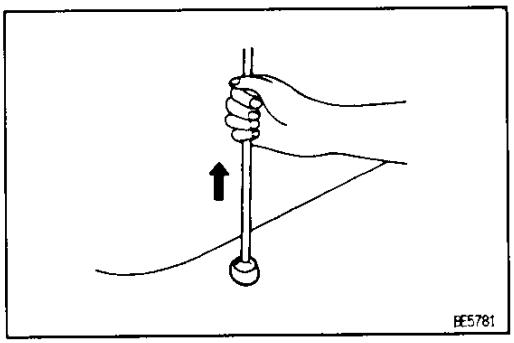

(c) Press the "AM, FM" buttons on the radio receiver and simultaneously turn the ignition switch to "ACC" position.

HINT:

- The rod will extend fully and be released from the motor antenna.
- After removing the antenna rod, leave the ignition switch at "ACC".

NOTICE: To prevent body damage when the antenna rod is released, hold the rod while it comes out.

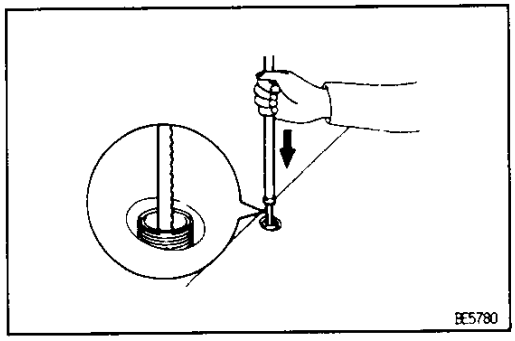

2. INSTALL ANTENNA ROD

(a) Insert the cable of the rod until it reaches the bottom.

HINT:

- When inserting the cable, the teeth on the cable must face toward the front of the vehicle.
- Insert the antenna approx. 300 mm (11.8 in.)

BE

Downloaded from www.Manualslib.com manuals search engine

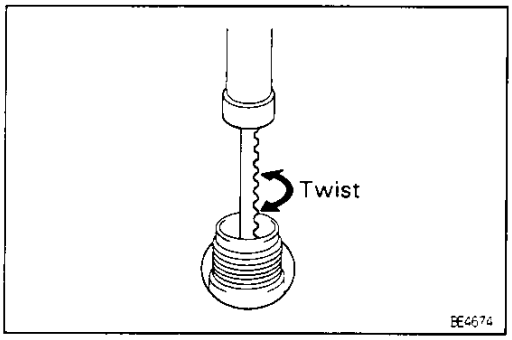

(b) Wind the cable to retract the rod by turning the ignition switch to "LOCK" position.
HINT:
- If the ignition switch is already in "LOCK" position, perform step 1 (c) first, then turn the ignition switch to "ACC" position.
- In case the cable is not wound, twist it as shown in the illustration.
- Even if the rod has not retracted fully, install the antenna nut and inspect the antenna rod operation. It will finally retract fully.

(c) Inspect the antenna rod operation by pushing the radio wave band select buttons.

GLASS PRINTED ANTENNA

BE12L-04

GLASS PRINTED ANTENNA INSPECTION

1. **INSPECT GLASS PRINTED ANTENNA**
(Use same procedure as for "INSPECT DEFOGGER WIRES".)
2. **REPAIR GLASS PRINTED ANTENNA**
(Use same procedure as for "REPAIR DEFOGGER WIRES".)

BE

Downloaded from www.Manualslib.com manuals search engine

CLOCK

TROUBLESHOOTING

BE12N-06

HINT: Troubleshoot the clock according to the table below.

Clock will not operate	1
Clock loses or gains time	2

1 CLOCK WILL NOT OPERATE

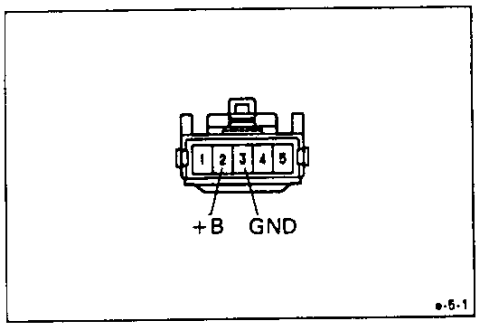

(a) Check that the battery voltage is 10 — 16 V.
If voltage is not as specified, replace the battery.

(b) Check that the DOME fuse is not blown.
If the fuse is blown, replace the fuse and check for short.

(c) Troubleshoot the clock as follows.
HINT: Inspect the connector on the wire harness side.

BE

Is there battery voltage between terminal +B and body ground?
- No → Open or short circuit in wire harness between terminal +B and DOME fuse.
- Yes ↓

Is there continuity between terminal GND and body ground?
- No → Open circuit in wire harness between terminal GND and body ground.
- Yes ↓

Replace clock assembly.

V05398

Downloaded from www.Manualslib.com manuals search engine

2 CLOCK LOSES OR GAINS TIME

(a) Check that the battery voltage is 10 — 16 V.
If voltage is not as specified, replace the battery.

(b) Inspect the error of the clock.

Allowable error (per day): ±2.0 seconds

If the error exceeds the allowable error, replace the clock assembly.

(c) Check if the clock adjusting button is sticking in position and has failed to return.

If the button has not returned, repair or replace the clock assembly.

(d) Troubleshoot the clock as follows.

HINT: Inspect the connector on the wire harness side.

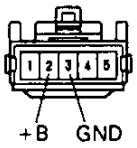

e-5-1

Is there 10 — 16 V between terminal +B and body ground?

Below 10 V → Locate cause, and repair or recharge battery.

Yes → Adjust or replace clock assembly.

V05359

BE

Downloaded from www.Manualslib.com manuals search engine

SERVICE SPECIFICATIONS

SERVICE DATA

BE1E1-06

INTEGRATION RELAY	
A1 — Ground (Constant)	Battery voltage
A7 — Ground (Ignition switch position LOCK or ACC)	No voltage
A7 — Ground (Ignition switch position ON)	Battery voltage
B2 — Ground (Constant)	Battery voltage
B3 — Ground (Constant)	Battery voltage
DAYTIME RUNNING LIGHT MAIN RELAY	
2 — Ground (Ignition switch position LOCK or ACC)	No voltage
2 — Ground (Ignition switch position ON)	Battery voltage
11 — Ground (Engine stop)	No voltage
11 — Ground (Engine running)	Battery voltage
15 — Ground (Constant)	Battery voltage
17 — Ground (Constant)	Battery voltage
TURN SIGNAL FLASHER	
Flashes/Minute	60 — 120
SPEEDOMETER (USING A SPEEDOMETER TESTER)	

EUROPE			
Standart indication (km/h)	Allowable range (km/h)	Standart indication (mph)	Allowable range (mph)
20	20 — 26	20	20 — 24.5
40	40 — 48	40	40 — 46.5
60	60 — 70	60	60 — 68.5
80	80 — 92	80	80 — 90.5
100	100 — 114	100	100 — 112.5
120	120 — 136	—	
140	140 — 158	—	
160	160 — 180	—	

GENERAL			
Standard indication (km/h)	Allowable range	Standard indication (mph)	Allowable range (mph)
20	17 — 27	20	18 — 24
40	38 — 46	40	38 — 44
60	57.5 — 67	60	58 — 66
80	77 — 88	80	78 — 88
100	96 — 109	100	98 — 110
120	115 — 130	120	118 — 132
140	134 — 151.5	—	
160	153 — 173	—	

AUSTRALIA	
Standard indication (km/h)	Allowable range (km/h)
40	36 — 44
60	54 — 66
80	72 — 88
100	90 — 110
120	108 — 132
140	126 — 154
160	144 — 176

BE

Downloaded from www.Manualslib.com manuals search engine

TACHOMETER (ON–VEHICLE)	
Standard indication (rpm)	Allowable range (rpm)
700	630 – 770
1000	900 – 1100
2000	1850 – 2150
3000	2800 – 3200
4000	3800 – 4200
5000	4800 – 5200
6000	5750 – 6250
7000	6700 – 7300
FUEL RECEIVER GAUGE	
A – B	Approx. 154.3 Ω
A – C	Approx. 126.2 Ω
B – C	Approx. 280.5 Ω
FUEL SENDER GAUGE	
Float position: F	Approx. 3.0 Ω
Float position: 1/2	Approx. 31.8 Ω
Float position: E	Approx. 110.0 Ω
WATER TEMPERATURE RECEIVER GAUGE	
A – B	Approx. 229.7 Ω
A – C	Approx. 54.0 Ω
B – C	Approx. 175.7 Ω
WATER TEMPERATURE SENDER GAUGE	
50 °C (122.0 °F)	160 – 240 Ω
120 °C (248.0 °F)	17.1 – 21.2 Ω
SLIDING ROOF CONTROL RELAY	
6 – Ground (Ignition switch position LOCK or ACC)	No voltage
6 – Ground (Ignition switch position ON)	Battery voltage
12 – Ground (Constant)	Battery voltage
CRUISE CONTROL ECU	
1 – 16 (Brake pedal position released)	Approx. 38.5 Ω
18 – Ground (Control switch position RES/ACC)	Approx. 68 Ω
18 – Ground (Control switch position SET/COAST)	Approx. 198 Ω
18 – Ground (Control switch position CANCEL)	Approx. 418 Ω
22 – Ground (Constant)	Approx. 13 Ω
23 – 25 (Constant)	Approx. 2 kΩ
24 – 25 (Actuator arm turned)	Resistance change linear
1 – Ground (Constant)	Battery voltage
2 – Ground (Ignition switch position ON and clutch pedal released): M/T	Battery voltage
2 – Ground (Ignition switch position ON and clutch pedal depressed): M/T	No voltage
2 – Ground (Shift lever position D): A/T	Battery voltage
2 – Ground (Shift lever position except D): A/T	No voltage
7 – Ground (Ignition switch position LOCK or ACC)	No voltage
7 – Ground (Ignition switch position ON)	Battery voltage
14 – Ground (Ignition switch position LOCK or ACC)	No voltage
14 – Ground (Ignition switch position ON)	Battery voltage

Downloaded from www.Manualslib.com manuals search engine

BODY

GENERAL INFORMATION ..... BO– 2
PREPARATION ..... BO– 6
FRONT BUMPER ..... BO– 8
REAR BUMPER ..... BO– 9
HOOD ..... BO– 10
FRONT DOOR ..... BO– 11
BACK DOOR ..... BO– 17
WIPER AND WASHER ..... BO– 20
ROOF DRIP SIDE FINISH MOULDING ..... BO– 26
WINDSHIELD MOULDING ..... BO– 29
WINDSHIELD ..... BO– 31
QUARTER WINDOW GLASS ..... BO– 37
BACK DOOR MOULDING AND GLASS ..... BO– 42
SLIDING ROOF ..... BO– 45
INSTRUMENT PANEL ..... BO– 52
FRONT SEAT ..... BO– 62
REAR SEAT ..... BO– 64
SEAT BELT ..... BO– 66
ROOF HEADLINING ..... BO– 68
FUEL TANK AND LINE ..... BO– 71
SERVICE SPECIFICATIONS ..... BO– 73

Downloaded from www.Manualslib.com manuals search engine

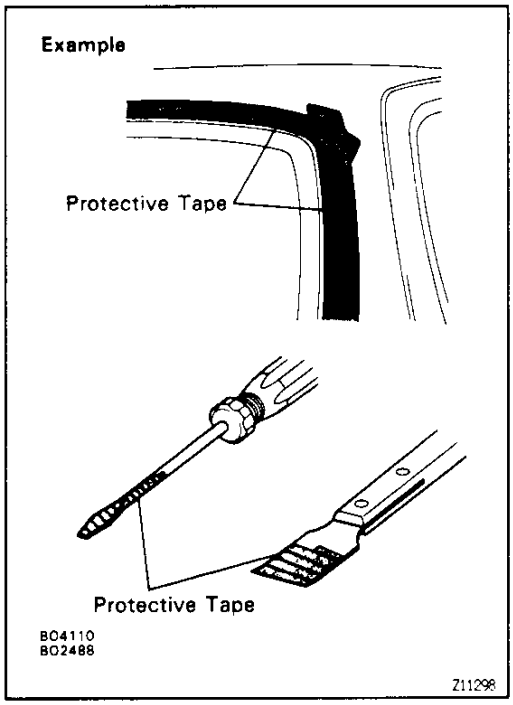

GENERAL INFORMATION

BO179-02

HANDLING PRECAUTIONS

Taping

When it is possible that the body or parts may be scratched during the operation, apply protective tape before starting work.

Example:

1. Before starting work, apply protective tape to body surfaces around parts to be removed and installed.
2. Before prying parts loose with a screwdriver or scraper etc., apply protective tape to the tip of the tool to avoid scratching parts or painted surfaces of the body.

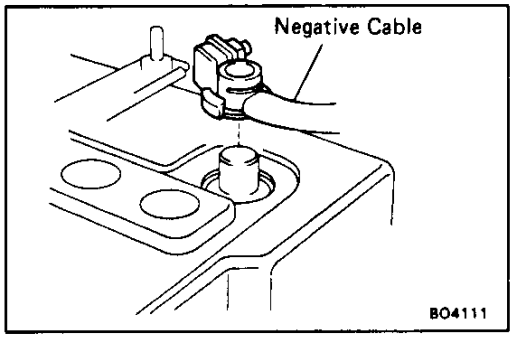

BO

Battery

In order to prevent a short circuit while doing work on the electrical circuit such as disconnecting a connector, first turn off the ignition switch and disconnect the negative (−) terminal cable from the battery before starting work.

HINT: When battery voltage is required for operation of a functioning part, connect the cable to the battery when needed, and promptly disconnect it when no longer necessary.

CAUTION:

- **To avoid erasing the memory of each memory system, never use a back−up power supply from outside the vehicle.**

Fitting Adjustments

When removing and installing body panels which have a preload value, after installation refer to the page containing the installation adjustment methods, and make adjustments according to the required specifications.

HINT: When making adjustments, do not completely loosen the bolts and nuts of the part being adjusted. Tighten them appropriately, and move the panels by hand to align them.

Downloaded from www.Manualslib.com manuals search engine

BO17A-02

ANTI—RUST TREATMENT

Anti—rust treatment used on the vehicle body includes body sealer, undercoat, rust inhibitor and paint.
HINT: Refer to the Body Collision Damage Repair Manual for details of which parts have received anti—rust treatment.

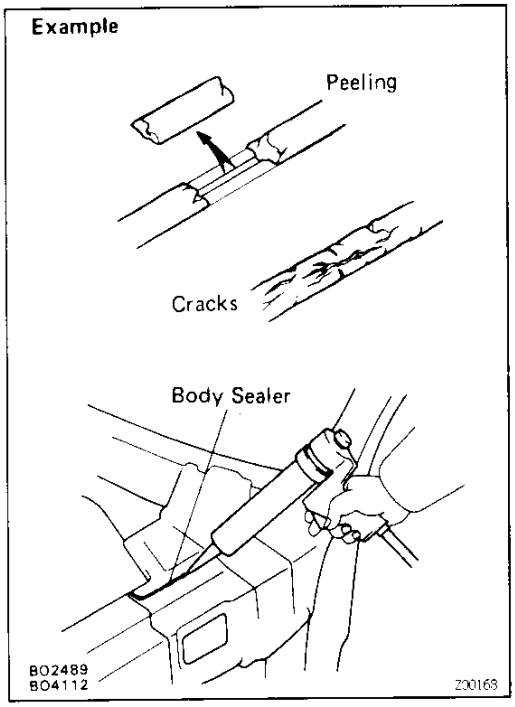

Body Sealer

If the body sealer is damaged (peeling, cracks, etc.) during the operation, replace it with new body sealer.
HINT: If body sealer gets on other parts, promptly wipe it off with a clean cloth dipped in a remover for grease, wax or silicone.

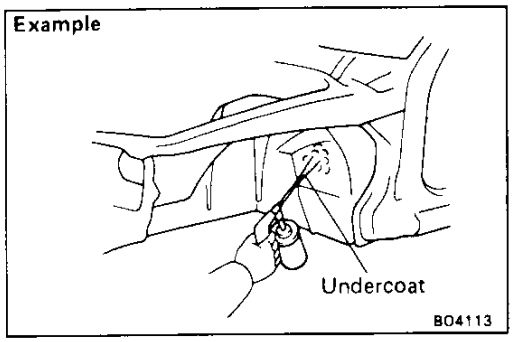

Undercoat

If the undercoat is damaged during the operation, apply new undercoat.
HINT:

- Cover the surrounding area with masking paper to avoid applying undercoat where it is not needed.
- Do not apply undercoat to high temperature parts such as the tailpipe, or to drive parts such as the drive shaft.

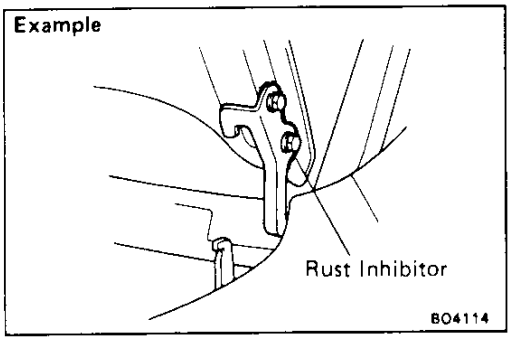

Rust Inhibitor

After removing and re—installing hinges and outer panel parts, apply rust inhibitor to the parts.
HINT: If rust inhibitor gets spilled on other parts, promptly wipe it off with a clean cloth dipped in a grease, wax and silicon remover.

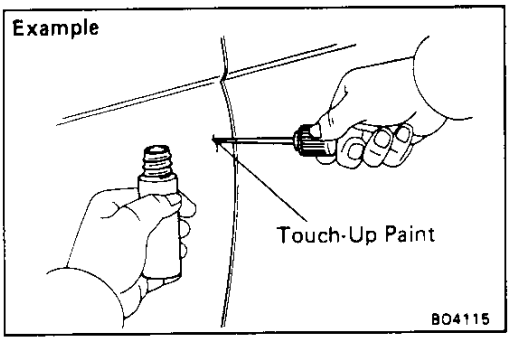

Touch—Up Paint

If a small scratch is made in the body surface, correct the scratch using touch—up paint the same color as the body color.

BO

Downloaded from www.Manualslib.com manuals search engine

BO179-02

CLIPS

The removal and installation methods of typical clips used in body parts are shown in the table below.
HINT: If the clip is damaged during the operation, always replace it with a new clip.

Shape (Example)	Removal/Installation
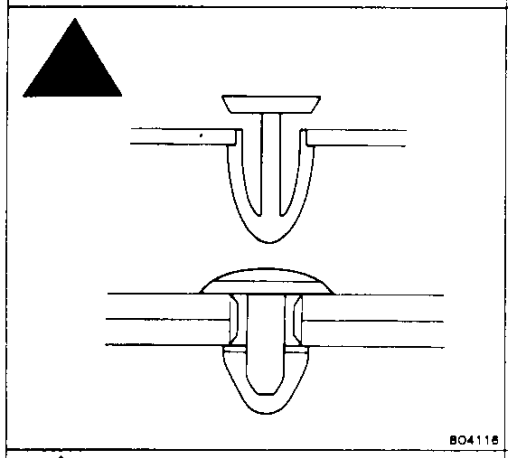 BO4116	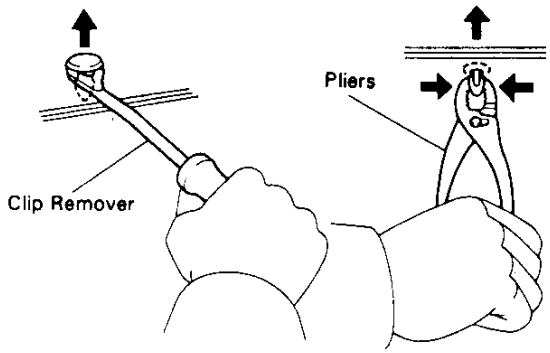 BO4117
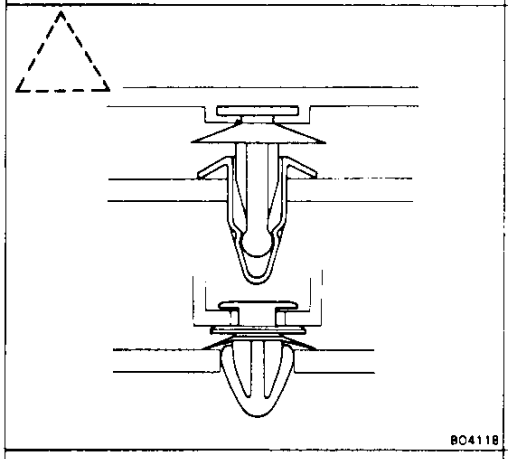 BO4118	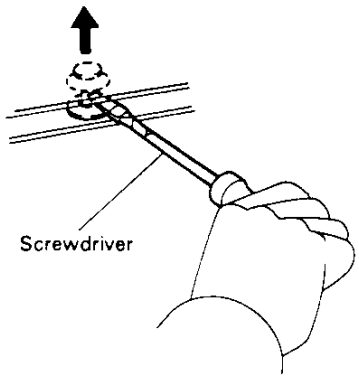 BO4119
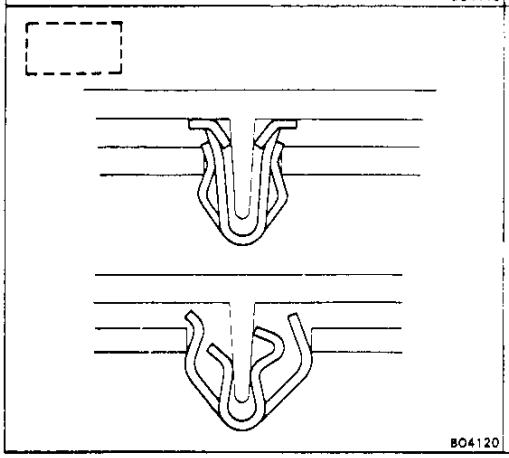 BO4120	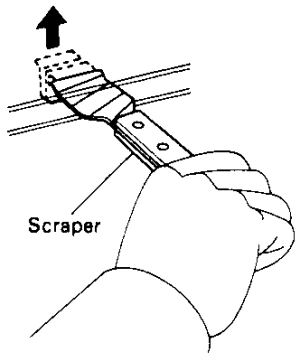 BO4121

V00005

BO

Downloaded from www.Manualslib.com manuals search engine

CLIPS (Cont'd)

Shape (Example)	Removal/Installation
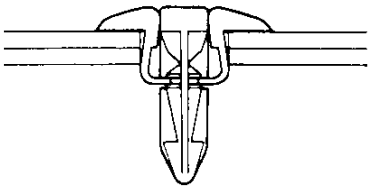 BO4122	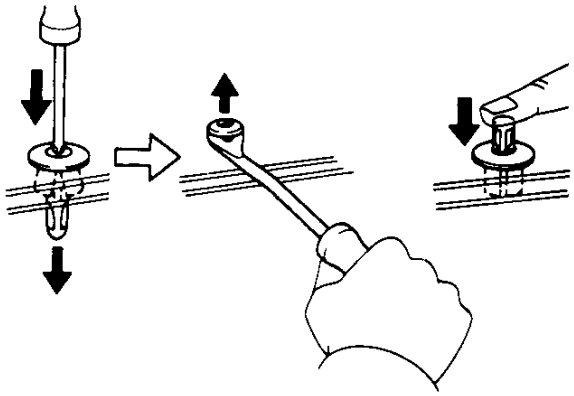 BO4123
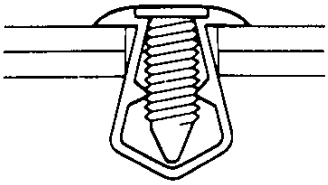 BO4124	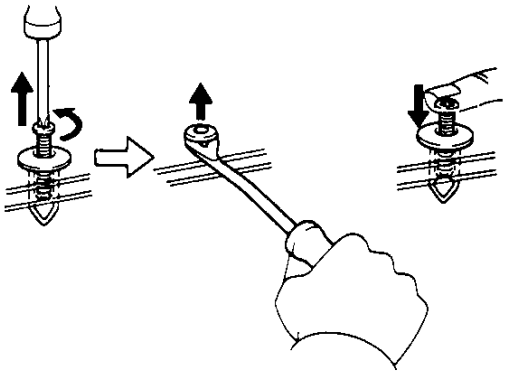 BO4125

V00012

BO

Downloaded from www.Manualslib.com manuals search engine

PREPARATION

SST (SPECIAL SERVICE TOOLS)

BO04J-08

	09812-00010	Door Hinge Set Bolt Wrench	Door side hinge bolt adjustment
	09806-30010	Windshield Moulding Remover	
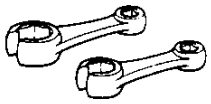	09631-22020	Power Steering Hose Nut 14 x 17 mm Wrench Set	Fuel line flare nut

BO01S-06

LUBRICANT

Item	Capacity	Classification
MP grease	—	—

BO

BO01T-0C

SSM (SPECIAL SERVICE MATERIALS)

	08833-00090	Adhesive 1131, THREE BOND 1131, LOCTITE 518 or equivalent	Front door Back door
	08850-00070	Windshield glass adhesive set No.15 or equivalent	Windshield Quarter window glass Back door moulding and glass (0-15°C or 32-59°F)
	08850-00080	Windshield glass adhesive set No.35 or equivalent	Windshield Quarter window glass Back door moulding and glass (15-35°C or 59-95°F)
	08850-00090	Windshield glass adhesive set No.45 or equivalent	Windshield Quarter window glass Back door moulding and glass (35-45°C or 95-113°F)
	08833-00030	Auto glass sealer or equivalent	Windshield moulding and glass Quarter window moulding and glass Back door moulding and glass
	08850-00065	Butyl Tape Set	Roof side rail weatherstrip
	08826-00080	Seal packing or equivalent	Roof drip side finish moulding Roof side rail weatherstrip retai ner

Downloaded from www.Manualslib.com manuals search engine

Ambient temperature	Part No.	Part Name
0 – 15°C (32 – 59°F)	08850-00070	Windshield glass adhesive set No. 15
15 – 35°C (59 – 95°F)	08850-00080	Windshield glass adhesive set No. 35
35 – 45°C (95 – 113°F)	08850-00090	Windshield glass adhesive set No. 45

V00250

1. CHOOSE SUITABLE ADHESIVE SET

Use an adhesive set suitable for the ambient temperature.

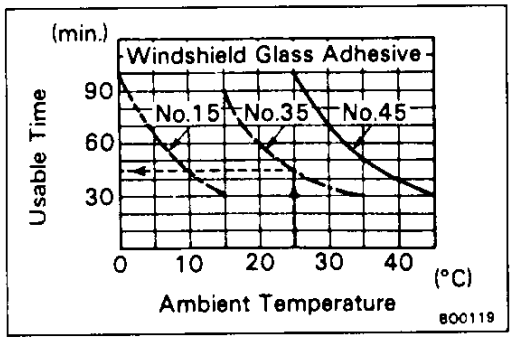

2. CHECK ADHESIVE'S USABLE TIME

After mixing main and hardening agents, finish glass installation within the specified time as shown.

Example: For glass installation in an ambient temperature of 25°C (77°F), apply adhesive set No.35 within 45 minutes.

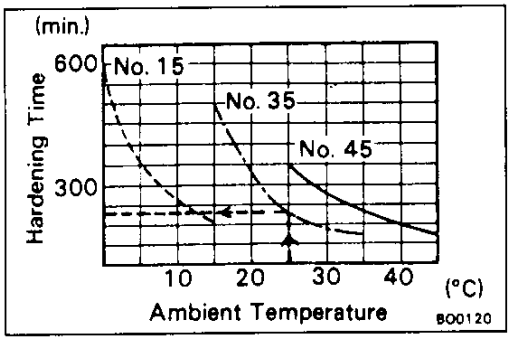

3. CHECK ADHESIVE HARDENING TIME

After main and hardening agents are mixed, leak tests should be made only after the hardening time has elapsed.

Example: The hardening time for adhesive set No.35 with an ambient temperature of 25°C (77°F) is 2 and 1/2 hours.

NOTICE: Do not drive the vehicle until at least double the hardening time has elapsed.

BO

Downloaded from www.Manualslib.com manuals search engine

FRONT BUMPER
COMPONENTS

B004K-06

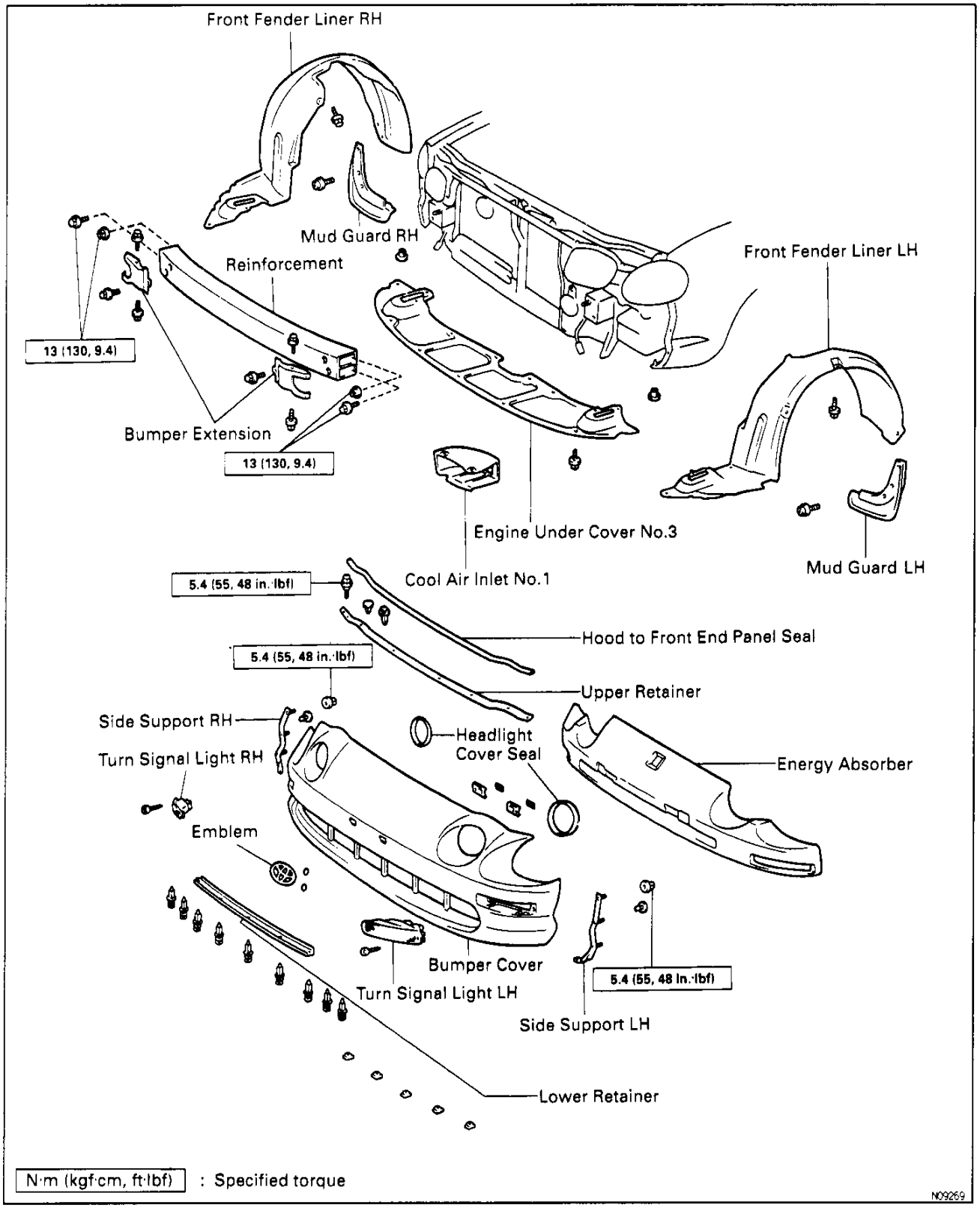

BO

Downloaded from www.Manualslib.com manuals search engine

REAR BUMPER
COMPONENTS

BO04M-08

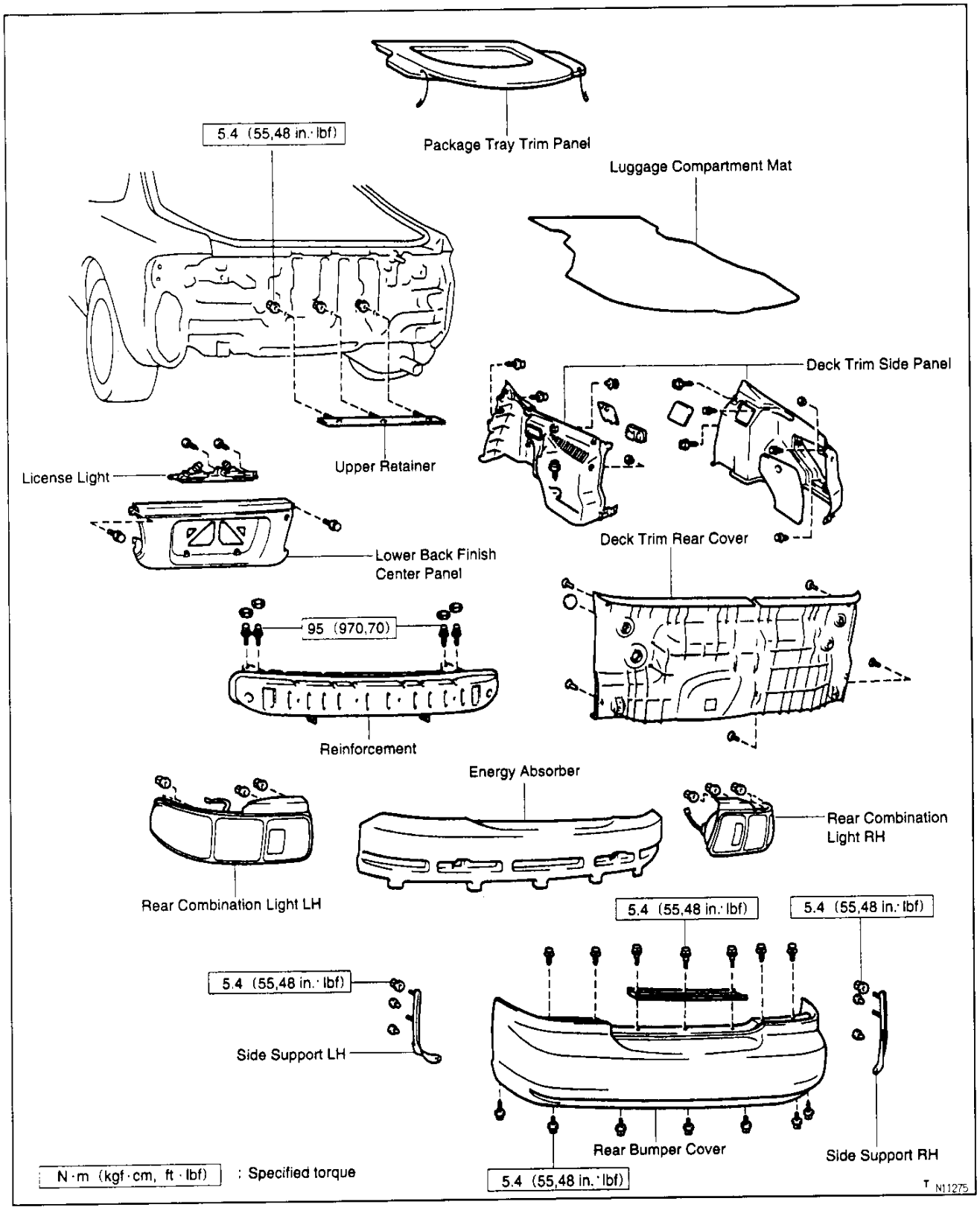

BO

Downloaded from www.Manualslib.com manuals search engine

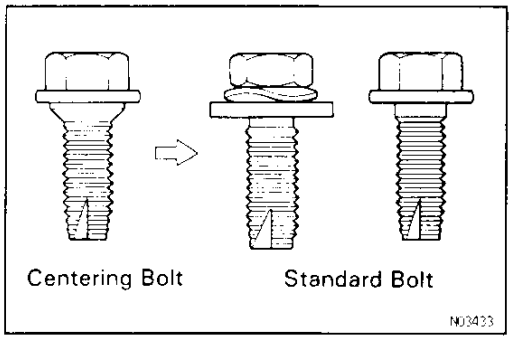

HOOD

HOOD ADJUSTMENT

B01A1-01

HINT: Since the centering bolt is used as the hood hinge and lock set bolt, the hood and lock cannot be adjusted with it on. Substitute the standard bolt for the centering bolt.

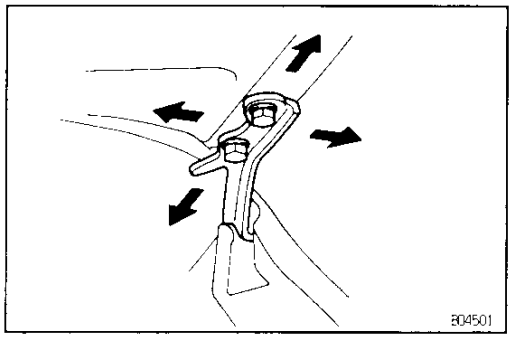

1. **ADJUST HOOD IN HORIZONAL DIRECTIONS**
   Adjust the hood by loosening the hood side hinge bolts.
   Torque: 13 N·m (130 kgf·cm, 9.4 ft·lbf)

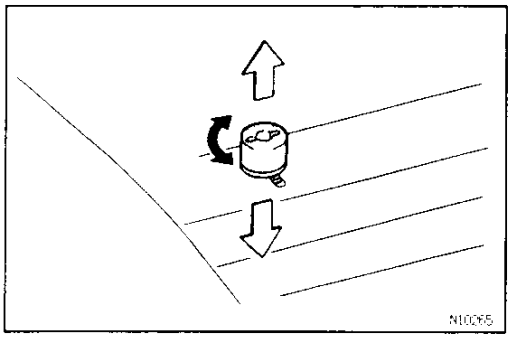

2. **ADJUST FRONT EDGE OF HOOD IN VERTICAL DIRECTION**
   Adjust the hood by turning the cushions.

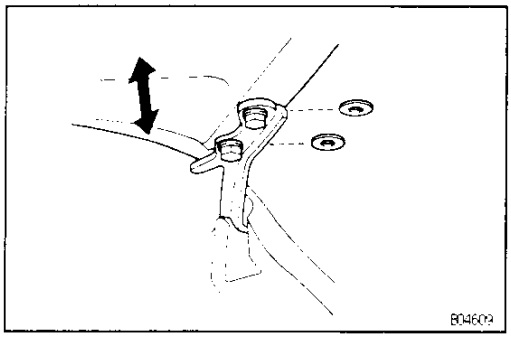

3. **ADJUST REAR EDGE OF HOOD IN VERTICAL DIRECTION**
   Adjust the hood by increasing or decreasing the number of the washers.

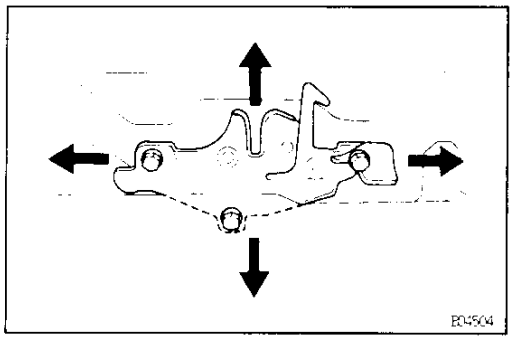

4. **ADJUST HOOD LOCK**
   Adjust the lock by loosening the bolts.
   Torque: 7.8 N·m (80 kgf·cm, 69 in.·lbf)

BO

Downloaded from www.Manualslib.com manuals search engine

FRONT DOOR
COMPONENTS

BO021-08

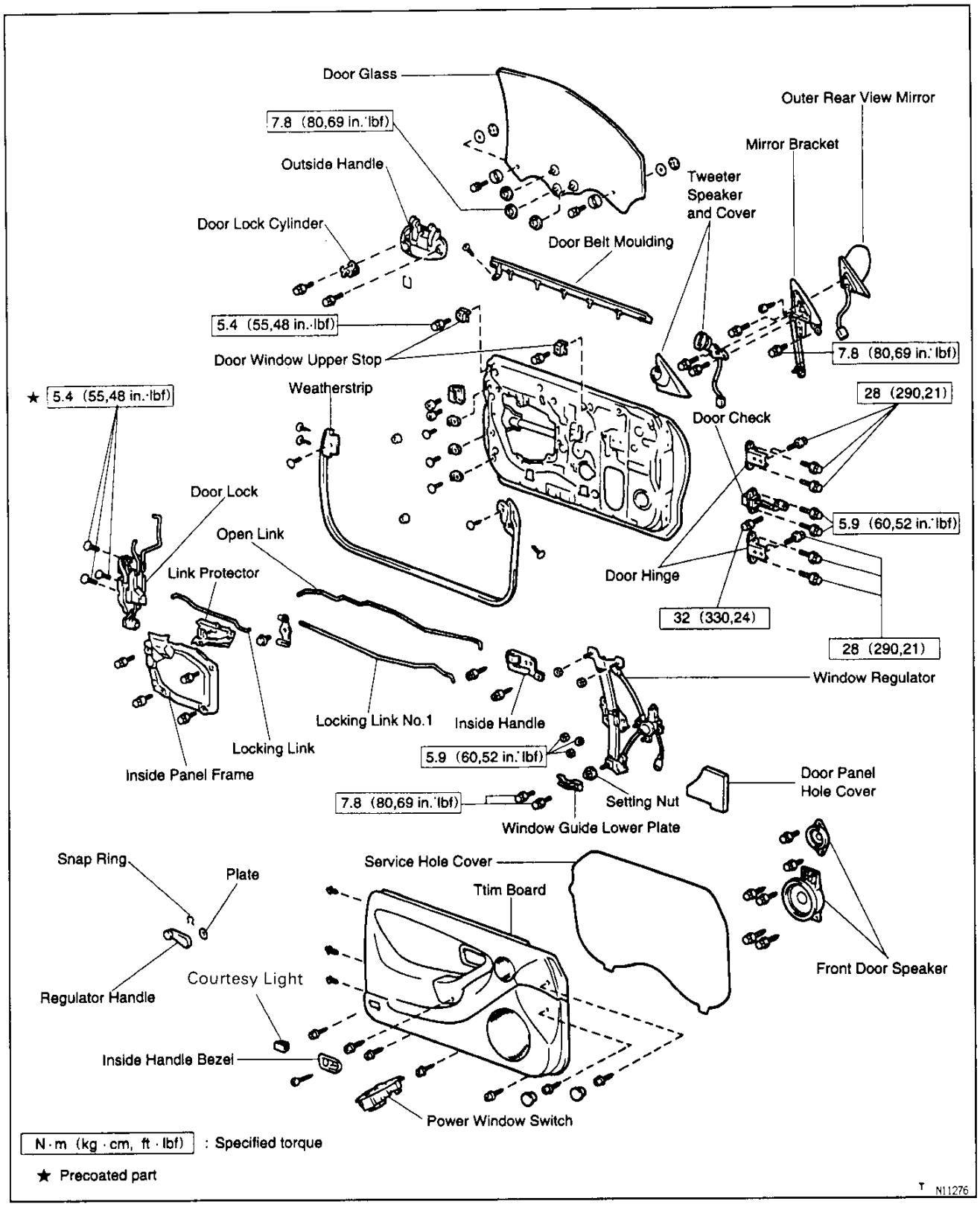

BO

Downloaded from www.Manualslib.com manuals search engine

BO1A2-02

FRONT DOOR ADJUSTMENT

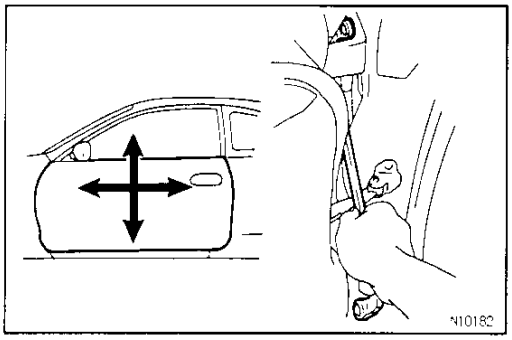

1. ADJUST DOOR IN FORWARD / REARWARD AND VERTICAL DIRECTIONS

Using SST, adjust the door by loosening the body side hinge bolts.

SST 09812–00010

Torque: 28 N·m (290 kgf·cm, 21 ft·lbf)

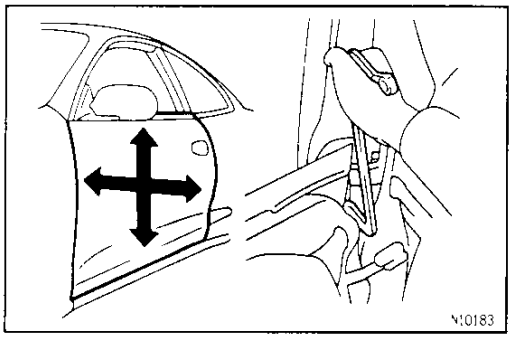

2. ADJUST DOOR IN LEFT/RIGHT AND VERTICAL DIRECTIONS

Using SST, adjust the door by loosening the door side hinge bolts.

SST 09812–00010

HINT: Substitute the standard bolt for the centering bolt. (See page BO–10)

Torque: 28 N·m (290 kgf·cm, 21 ft·lbf)

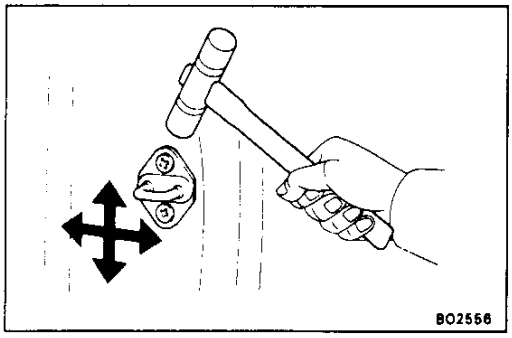

3. ADJUST DOOR LOCK STRIKER

(a) Check that the door fit and door lock linkages are adjusted correctly.

(b) Loosen the striker mounting screws.

(c) Using a plastic hammer, tap the striker to adjust it.

CAUTION: Do not tap the striker too hard.

Torque: 26 N·m (260 kgf·cm, 19 ft·lbf)

BO

Downloaded from www.Manualslib.com manuals search engine

FRONT DOOR DISASSEMBLY

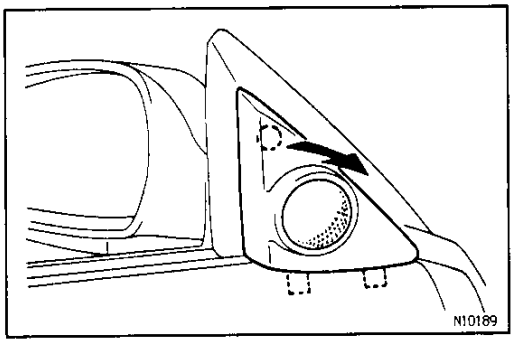

1. REMOVE TWEETER SPEAKER COVER

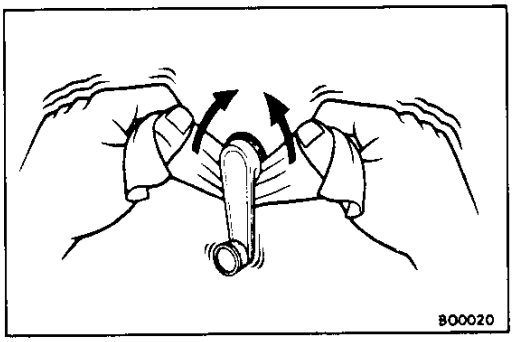

2. w/o Power Window:
REMOVE REGULATOR HANDLE
Pull off the snap ring with a shop rag and remove the regulator handle and plate.

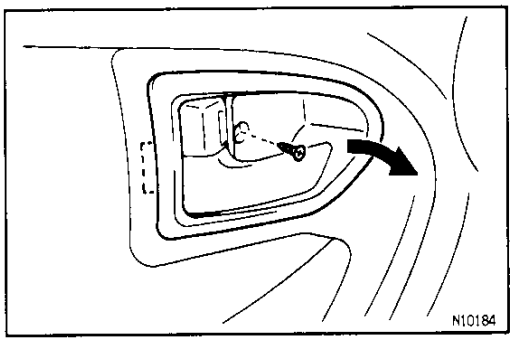

3. REMOVE INSIDE HANDLE BEZEL
Remove the screw and pull the inside handle bezel as shown on the illustration.

BO

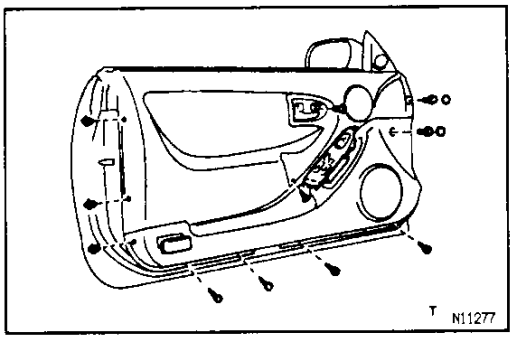

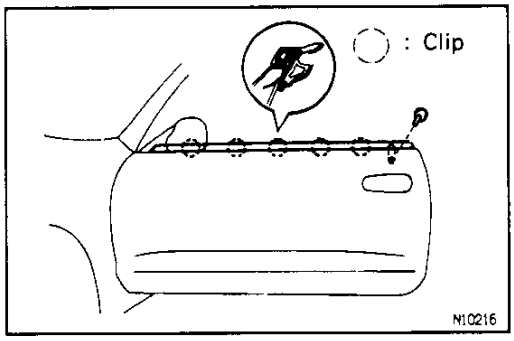

4. REMOVE FOLLOWING PARTS:
(a) Power window switch
(b) Courtesy light
(c) Trim board
(d) Front speakers
(e) Inside handle
(f) Service hole cover
(g) Weatherstrip
(h) Door belt moulding
(i) Inside panel frame
(j) Door window upper stop
(k) Door glass
(l) Window guide lower plate
(m) Window regulator
(n) Door lock with link
(o) Outside handle with door lock cylinder
(p) Outer rear view mirror
(q) Tweeter speaker
(r) Mirror bracket

Downloaded from www.Manualslib.com manuals search engine

BO1A3-01

FRONT DOOR ASSEMBLY

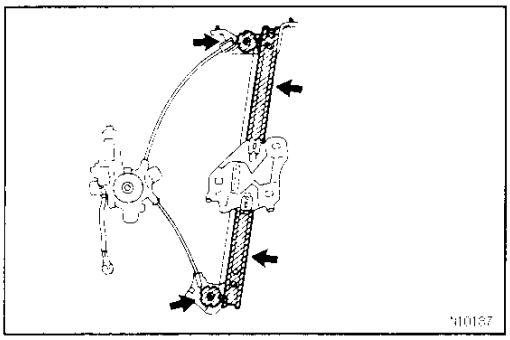

ASSEMBLE FRONT DOOR PARTS BY FOLLOWING DISASSEMBLY SEQUENCE IN REVERSE

BEFORE INSTALLING PARTS, COAT THEM WITH MP GREASE

(a) Apply MP grease to the glass guide and rollers of the window regulator.

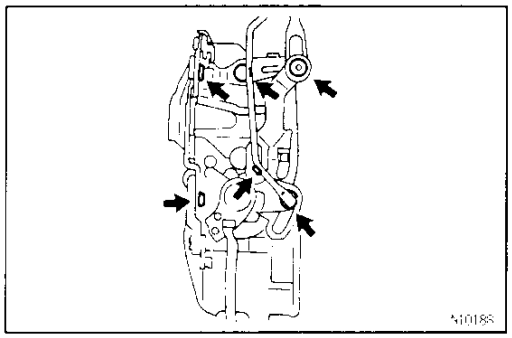

(b) Apply MP grease to the sliding and rotating parts of the door lock.

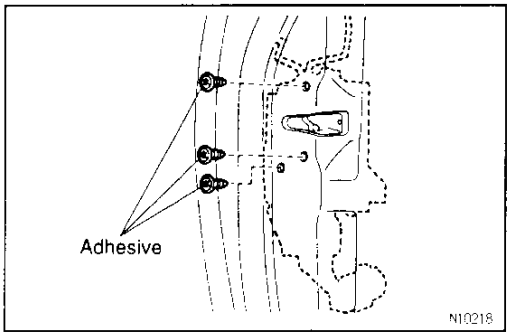

INSTALL DOOR LOCK

(a) Apply adhesive to 3 screws.
Part No.08833–00090, THREE BOND 1324

(b) Install the door lock with 3 screws.
Torque: 5.4 N·m (55 kgf·cm, 48 in.·lbf)

(c) w/ Power Door Lock:
Connect the connector.

(d) Connect 2 links to the outside handle and door lock cylinder.

(e) Connect 2 links connected with the inside handle.

w/o Power Window:

INSTALL REGULATOR HANDLE

With door window fully closed, install the plate and regulator handle with the snap ring as shown on the illustration.

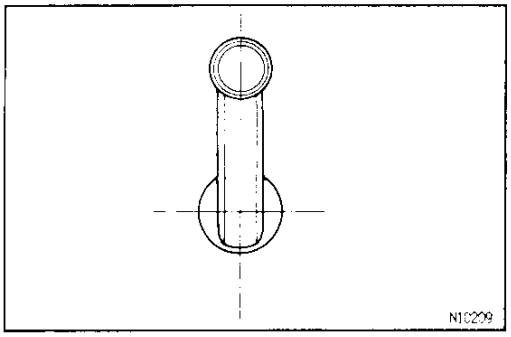

BO

Downloaded from www.Manualslib.com manuals search engine

B01A4 02

FRONT DOOR GLASS ADJUSTMENT

1. CHECK FRONT DOOR GLASS

Check the following items. If the conditions are not met, readjust the glass.

(a) When you close the door with the glass fully closed, the A–A, B–B sections are in the same condition as shown in the illustration.

(b) When you push the glass firmly from inside, the glass stops at the roof drip moulding and does not move.

(c) When you close the door with the glass fully closed, the glass is not caught in the outside lip of the weatherstrip and does not touch the roof drip moulding.

(d) With the door closed, the glass moves smoothly.

(e) The upper edge of the glass cannot be seen from outside of the vehicle (edge touching roof side rail weatherstrip).

(f) When the glass is being raised, the glass and roof side rail weatherstrip are parallel, and the front and rear door window upper stops touch at the same time.

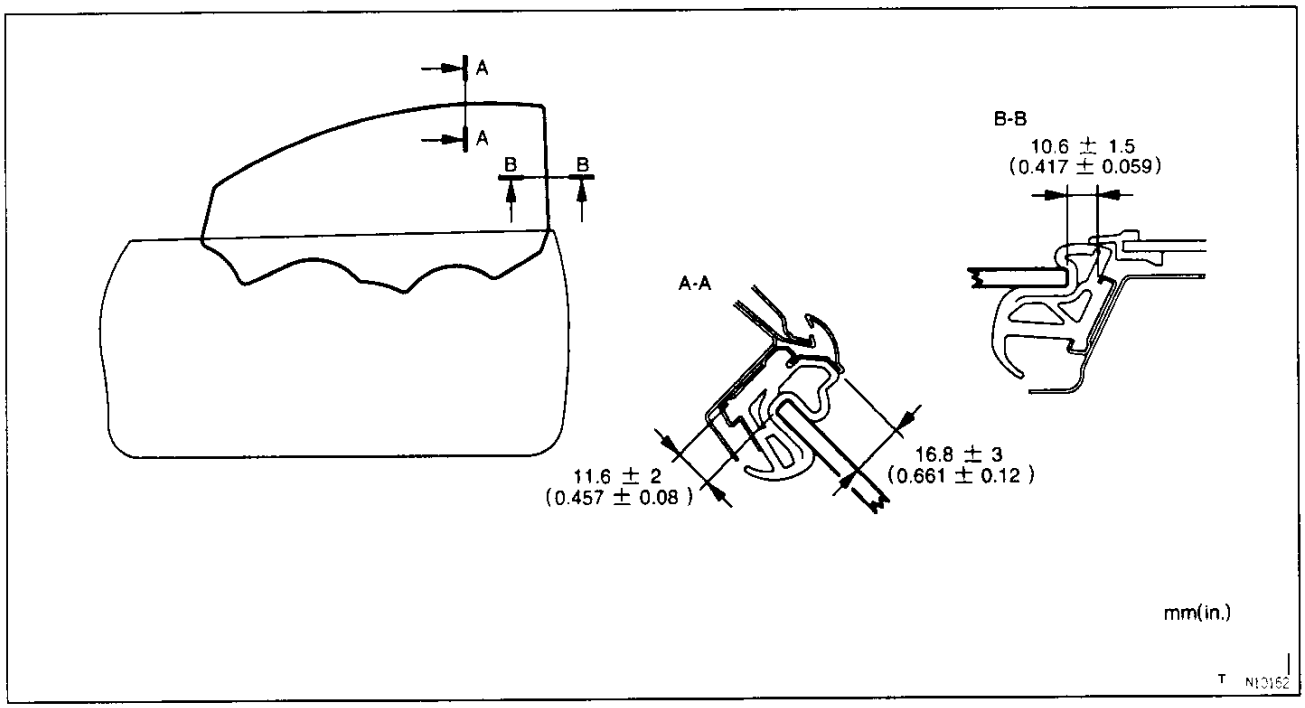

BO

Downloaded from www.Manualslib.com manuals search engine

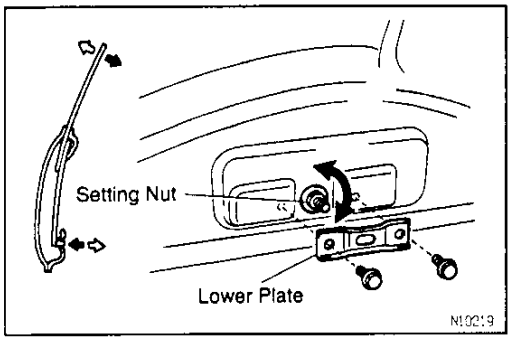

2. ADJUST FRONT DOOR GLASS

Upper side of glass – in/out

(a) Remove the 2 lower plate bolts and lower plate.

(b) Adjust the glass by turning the setting nut.

(c) Reinstall the lower plate and 2 bolts.
Torque: 7.8 N·m (80 kgf·cm, 69 in.·lbf)

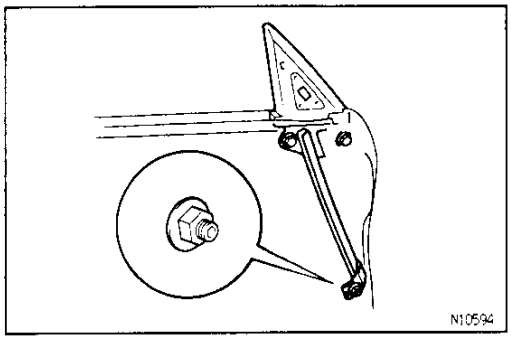

(d) In case the glass does not fit the mirror bracket: Loosen the lower nut of the mirror bracket. Using a hexagon wrench, adjust the mirror bracket to in/out direction by turning the stud bolt.
Torque: 7.8 N·m (80 kgf·cm, 69 in.·lbf)

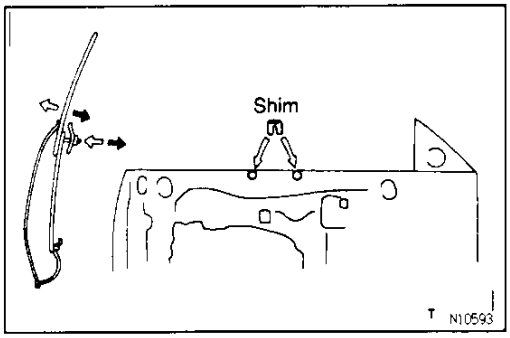

BO

Lower side of glass – in/out

(a) Loosen the 2 nuts for the window regulator.

(b) Using a shim, adjust the glass to in/out direction.
Shim thickness:
1.0 mm (0.039 in.)
2.0 mm (0.079 in.)

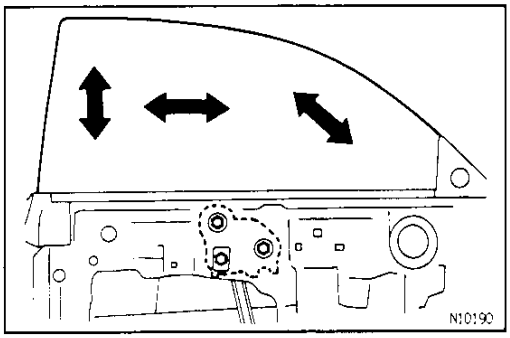

Position (forward/rearward) and attitude of glass
Loosen 3 bolts of the carrier plate and adjust.
Torque: 7.8 N·m (80 kgf·cm, 69 in.·lbf)

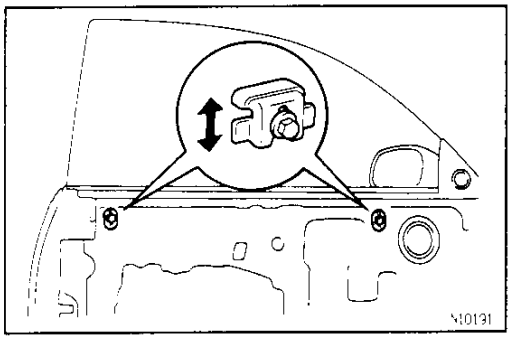

Position (vertical) and attitude of glass (when glass fully closed)
Adjust the door window upper stops.
Torque: 5.4 N·m (55 kgf·cm, 48 in.·lbf)

Downloaded from www.Manualslib.com manuals search engine

BACK DOOR
COMPONENTS

BO1A6-01

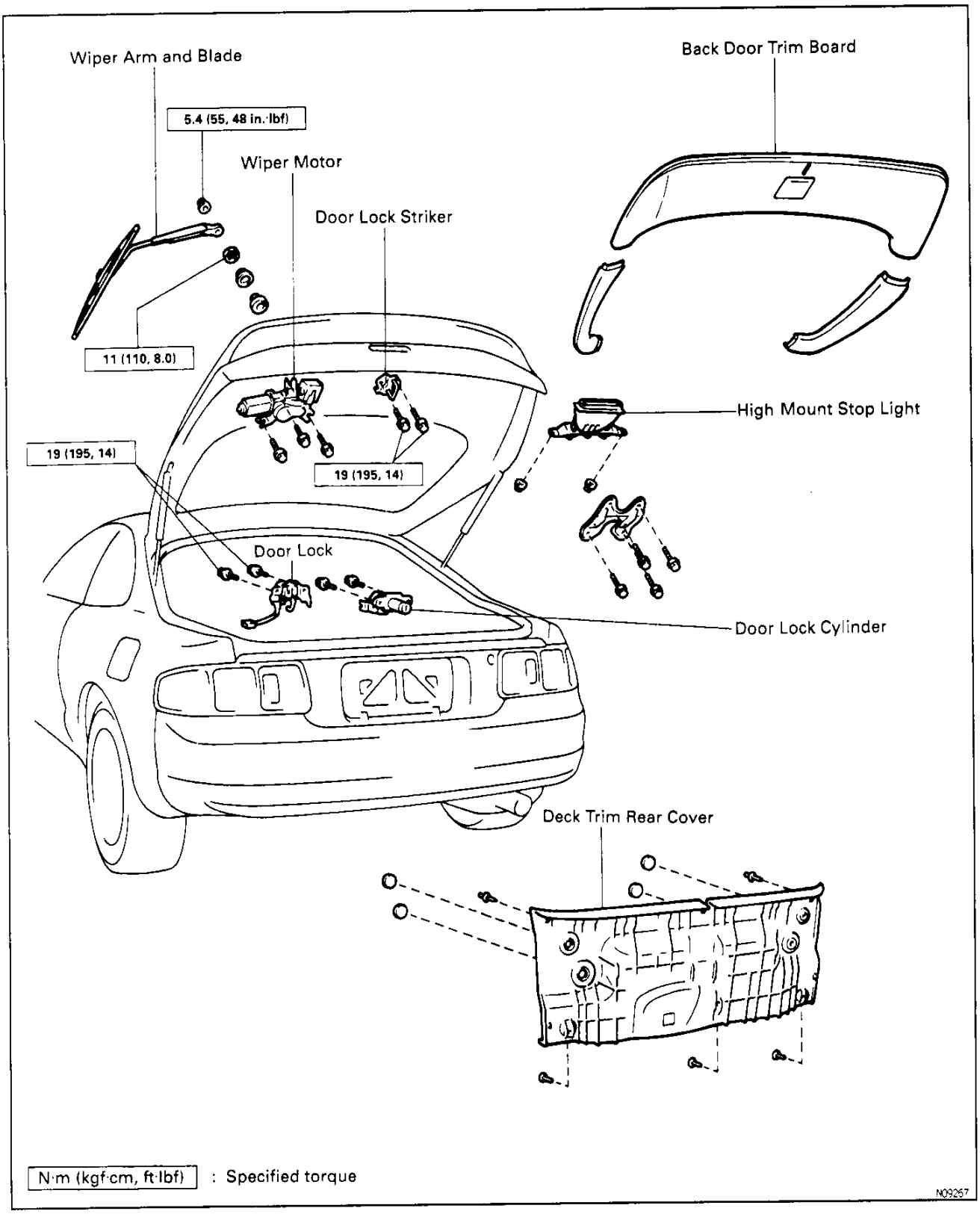

BO

Downloaded from www.Manualslib.com manuals search engine

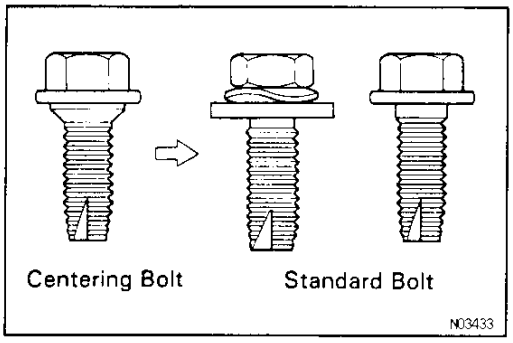

BACK DOOR ADJUSTMENT

BO180-01

HINT: Since the centering bolt is used the back door side hinge bolt, the back door cannot be adjusted with it on. Substitute the standard bolt for the centering bolt.

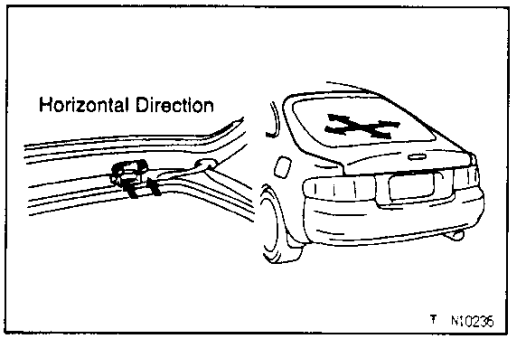

1. ADJUST DOOR IN HORIZONTAL DIRECTION

Adjust the door by loosening the back door side hinge bolts.

Torque: 14 N·m (145 kgf·cm, 11 ft·lbf)

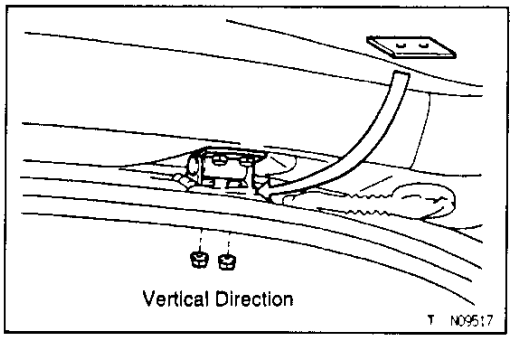

2. ADJUST DOOR IN VERTICAL DIRECTION

(a) Remove the roof headlining.(See pages BO–68 to BO–70)

(b) Loosen the body side hinge nuts and adjust the door by increasing or decreasing the number of the shims.
Torque: 21 N·m (210 kgf·cm, 15 ft·lbf)

(c) Reinstall the removed parts in the reverse order to their removal.

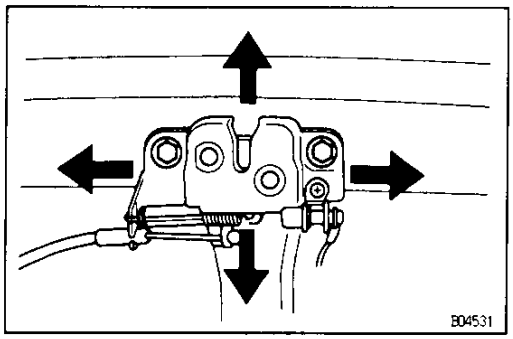

3. ADJUST DOOR LOCK

(a) Remove the deck trim rear cover.

(b) Adjust the lock position by slightly loosening the lock mounting bolts, and hitting the lock with a hammer and brass bar.
CAUTION: Do not tap the lock too hard.
Torque: 19 N·m (195 kgf·cm, 14 ft·lbf)

(c) Install the deck trim rear cover.

Downloaded from www.Manualslib.com manuals search engine

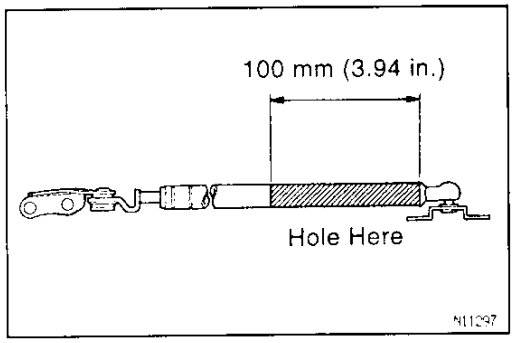

BO17L-08

BACK DOOR DAMPER STAY REMOVAL AND INSTALLATION

1. REMOVE DAMPER STAY

NOTICE: When handling the damper.

- **Do not disassemble the damper because the cylinder is filled with pressurized gas.**
- **If the damper is to be replaced, drill a 2.0 – 3.0 mm (0.079 – 0.118 in.) hole in the bottom of the removed damper cylinder to completely release the high–pressure gas before disposing of it.**
- **When drilling, chips may fly out so work carefully.**
- **The gas is colorless, odorless and non–toxic.**
- **When working, handle the damper carefully. Never score or scratch the exposed part of the piston rod, and never allow paint or oil to get on it.**
- **Do not turn the piston rod and cylinder with the damper fully extended.**

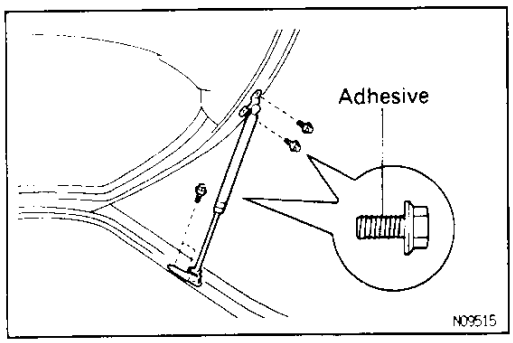

2. INSTALL DAMPER STAY

Apply adhesive to the bolts before tightening.

Part No. 08833 – 00090 or equivalent

Torque: 8.8 N·m (90 kgf·cm, 78 in.·lbf)

BO

Downloaded from www.Manualslib.com manuals search engine

WIPER AND WASHER
COMPONENTS

BO000D-03

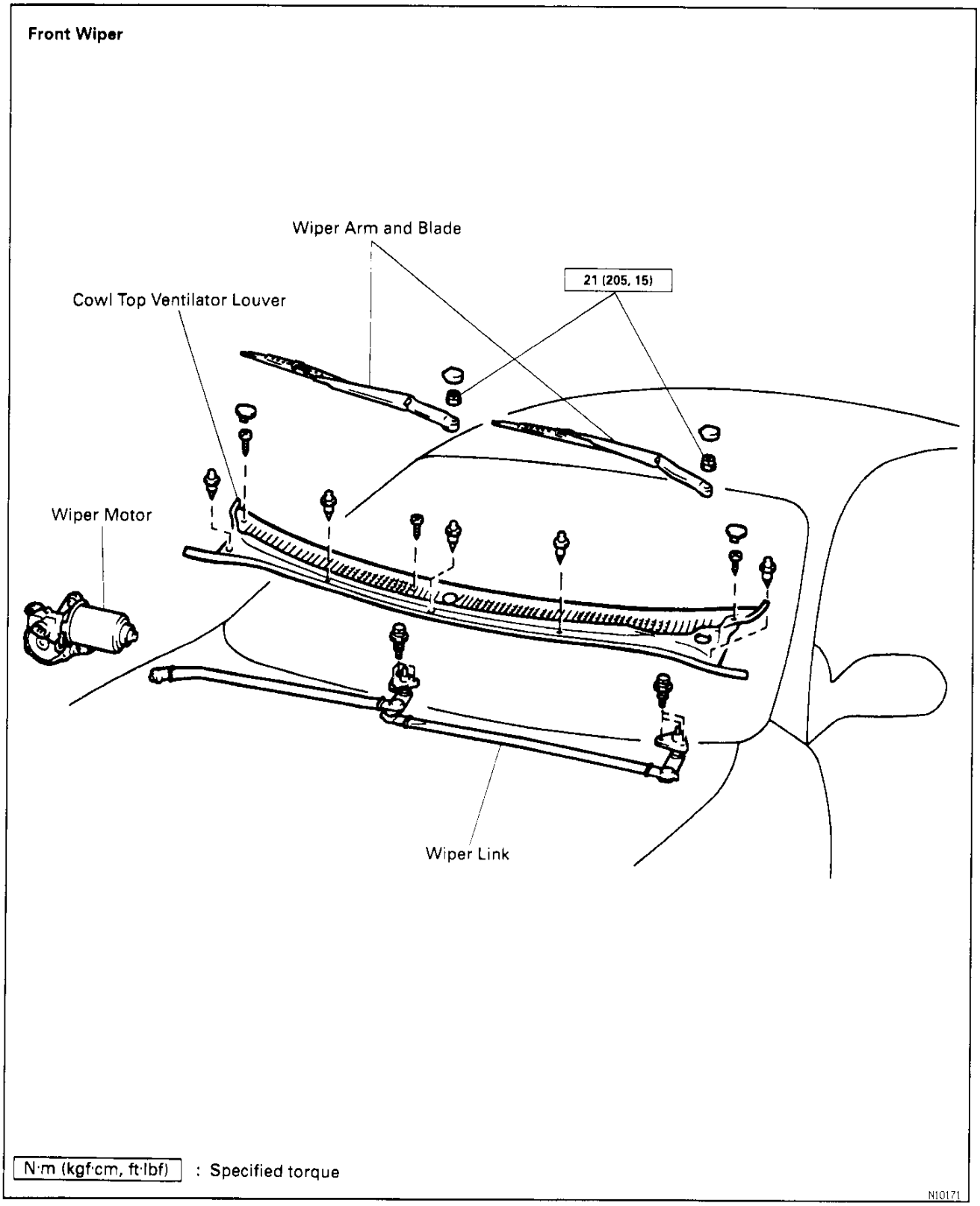

BO

Downloaded from www.Manualslib.com manuals search engine

COMPONENTS (Cont'd)

Rear Wiper

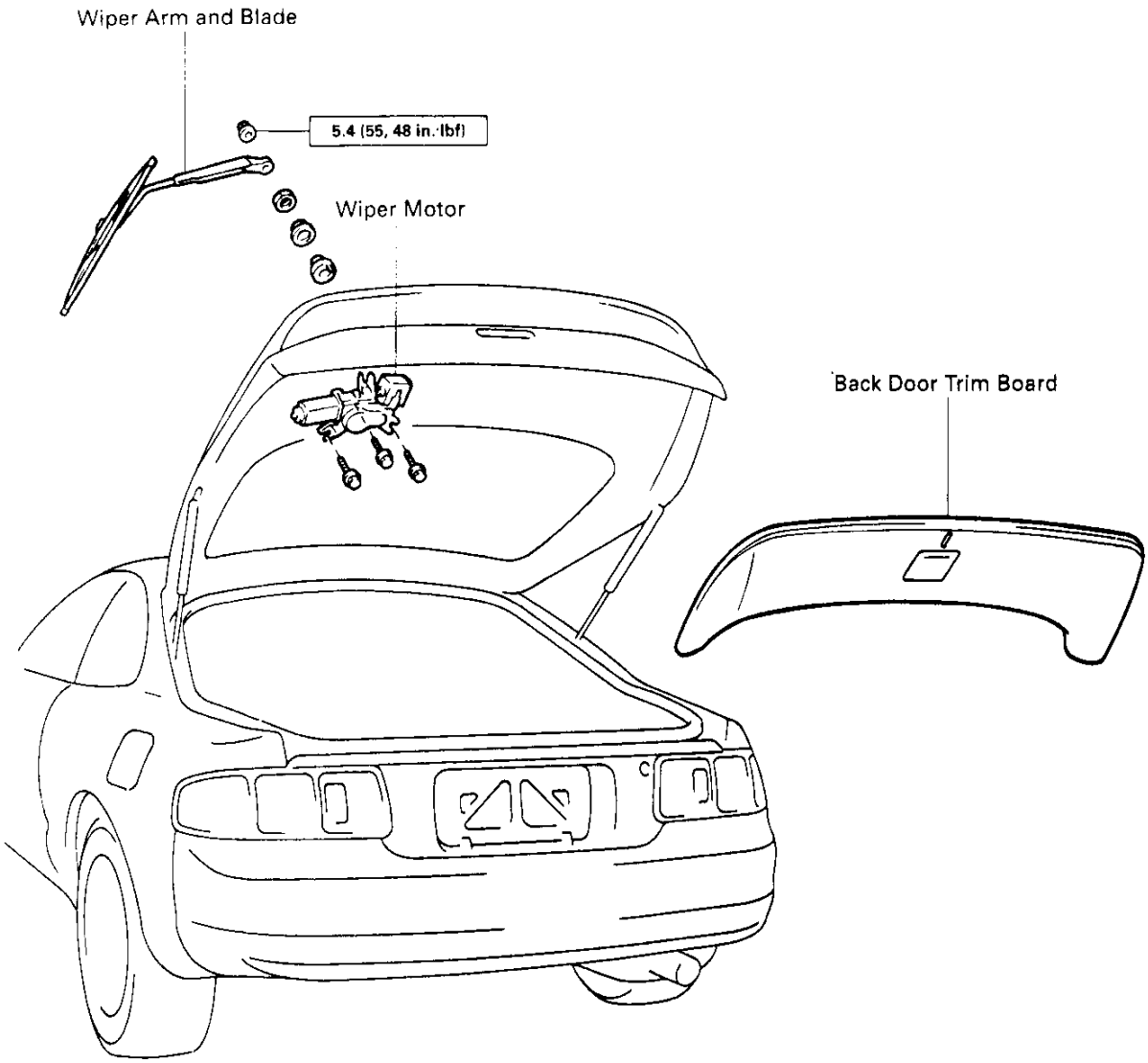

N·m (kgf·cm, ft·lbf) : Specified torque

N10170

Downloaded from www.Manualslib.com manuals search engine

BO1A9-02

FRONT WIPER MOTOR AND LINK ASSEMBLY REMOVAL

1. POSITION WIPER ARM

For easy removal of the wiper arms, operate the wipers and turn the ignition switch OFF when the wiper arms are about half—way on the downward sweep.

2. REMOVE FOLLOWING PARTS:

(a) Front wiper arm

(b) Cowl top ventilator louver

3. REMOVE FRONT WIPER MOTOR AND LINK ASSEMBLY

(a) Remove 6 bolts of the wiper link.

BO

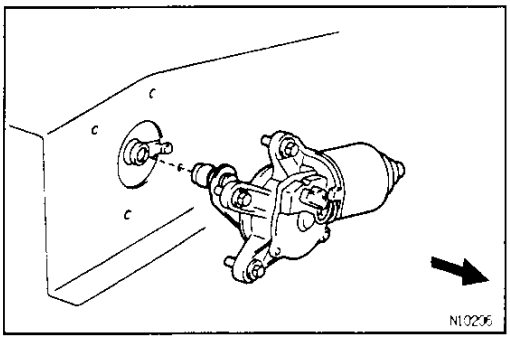

(b) Disconnect the connector, then loosen 4 bolts of the motor.

(c) Clip the claw of the wiper link on to the panel.

(d) Disconnect the motor from the wiper link and remove the motor.

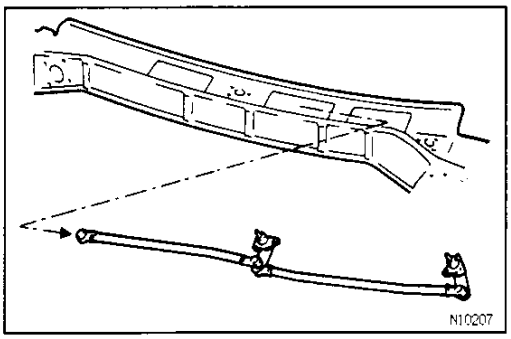

(e) Remove the wiper link through the service hole.

Downloaded from www.Manualslib.com manuals search engine

BO1AA-01

FRONT WIPER MOTOR AND LINK ASSEMBLY INSTALLATION

1. INSTALL WIPER MOTOR AND LINK ASSEMBLY

(a) Place the link through the service hole.

(b) Install 6 bolts of the link.

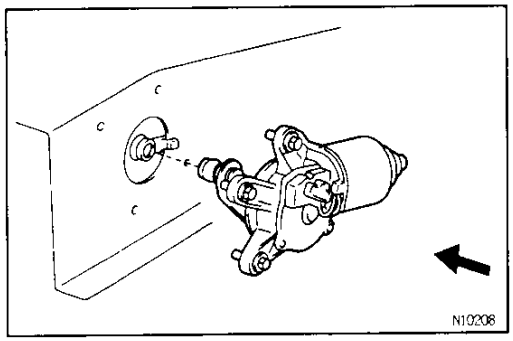

(c) Clip the claw of the wiper link on to the panel.

(d) Connect the motor to the wiper link.

(e) Tighten 4 bolts.

2. INSTALL COWL TOP VENTILATOR LOUVER

3. INSTALL FRONT WIPER ARMS

(a) Operate the wipers once and turn the wiper switch OFF, and install the wiper arms and blades.

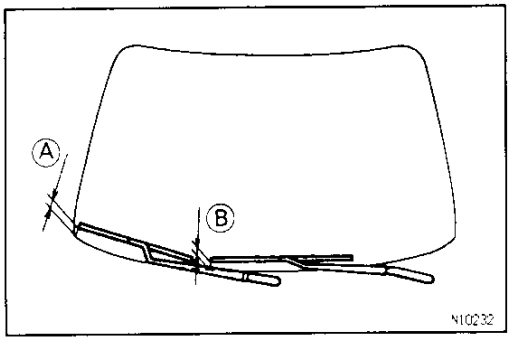

(b) Adjust the installation positions of the wiper arms to the positions shown in the figure.

Ⓐ Approx. 36.1 mm (1.42 in.)

Ⓑ Approx. 20.6 mm (0.81 in.)

(c) Torque the nut.

Torque: 21 N·m (205 kgf·cm, 15 ft·lbf)

BO

Downloaded from www.Manualslib.com manuals search engine

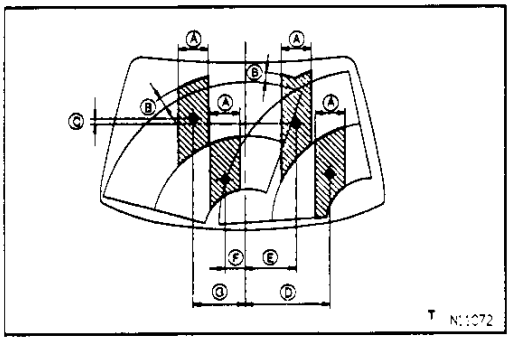

FRONT WASHER NOZZLE ADJUSTMENT

BO18A-01

1. INSPECT FRONT WASHER NOZZLE

While operating the washer, check that the point where the washer fluid hits the windshield is within the range indicated by the hatched area.

Ⓐ Approx. 150 mm (5.91 in.)
Ⓑ Approx. 50 mm (1.97 in.)
Ⓒ Within 50 mm (1.97 in.)
Ⓓ Approx. 425 mm (16.73 in.)
Ⓔ Approx. 250 mm (9.84 in.)
Ⓕ Approx. 100 mm (3.94 in.)
Ⓖ Approx. 260 mm (10.24 in.)

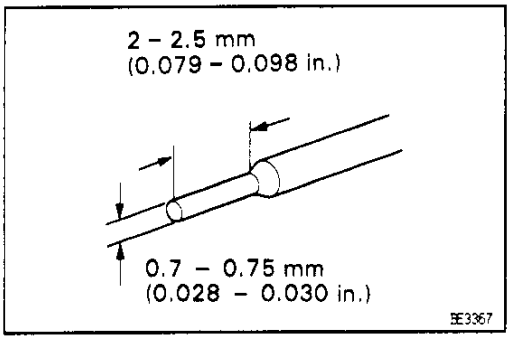

2. ADJUST FRONT WASHER NOZZLE

Using a tool like that shown in the figure, change the direction of the nozzle hole to adjust the point where washer fluid strikes the windshield.

BO

Downloaded from www.Manualslib.com manuals search engine

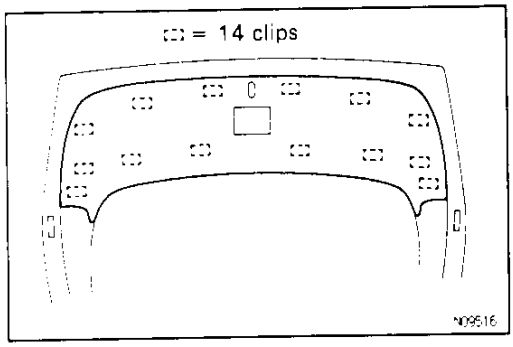

REAR WIPER REMOVAL

1. **REMOVE REAR WIPER ARM**
2. **REMOVE BACK DOOR TRIM BOARD**
3. **REMOVE REAR WIPER MOTOR**

(a) Disconnect the connector, then loosen 3 bolts.
(b) Remove the motor.

REAR WIPER INSTALLATION

1. **INSTALL FOLLOWING PARTS:**

(a) Rear wiper motor
(b) Back door trim board

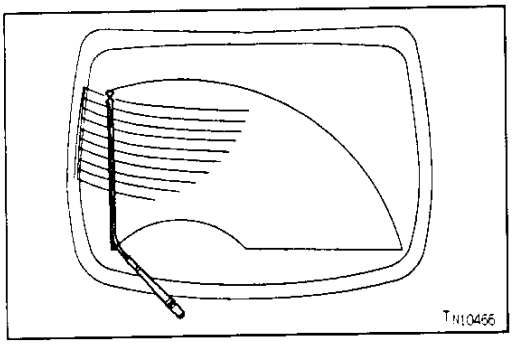

2. **INSTALL REAR WIPER ARM**

(a) Operate the wiper once and turn the wiper switch OFF, and install the wiper arm.
(b) Adjust the top of the wiper blade to the installation mark printed on the glass.
(c) Torque the nut.
Torque: 5.4 N·m (55 kgf·cm, 48 in.·lbf)

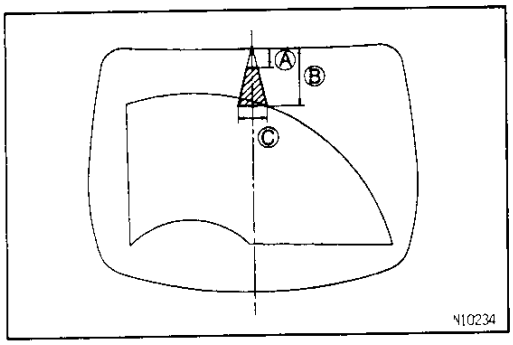

REAR WASHER NOZZLE ADJUSTMENT

1. **INSPECT REAR WASHER NOZZLE**
While operating the washer, check that the point where the washer fluid hits the back door glass is within the range indicated by the hatched area.
Ⓐ Approx. 50 mm (1.97 in.)
Ⓑ Approx. 200 mm (7.87 in.)
Ⓒ Approx. 104 mm (4.09 in.)
2. **ADJUST REAR WASHER NOZZLE**
(See step 2 on FRONT WASHER NOZZLE ADJUSTMENT)

BO

Downloaded from www.Manualslib.com manuals search engine

ROOF DRIP SIDE FINISH MOULDING

BO1AC-01

COMPONENTS

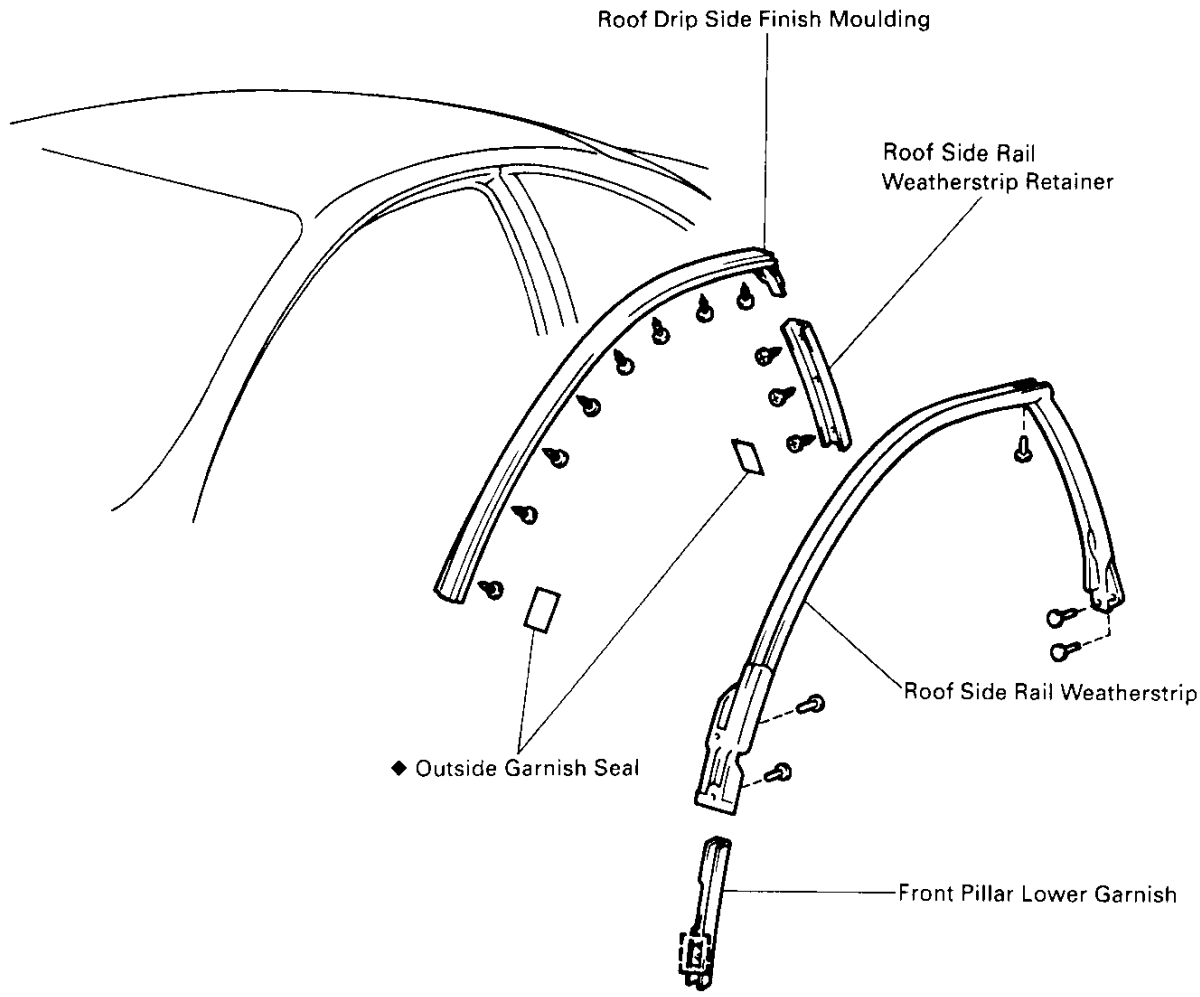

◆ Non-reusable part

M10175

Downloaded from www.Manualslib.com manuals search engine

BO17Q-02

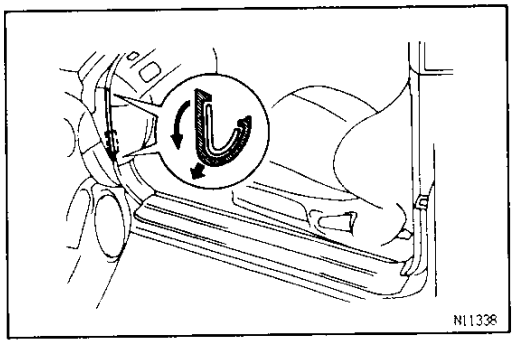

ROOF DRIP SIDE FINISH MOULDING REMOVAL

1. **REMOVE FRONT PILLAR LOWER GARNISH**

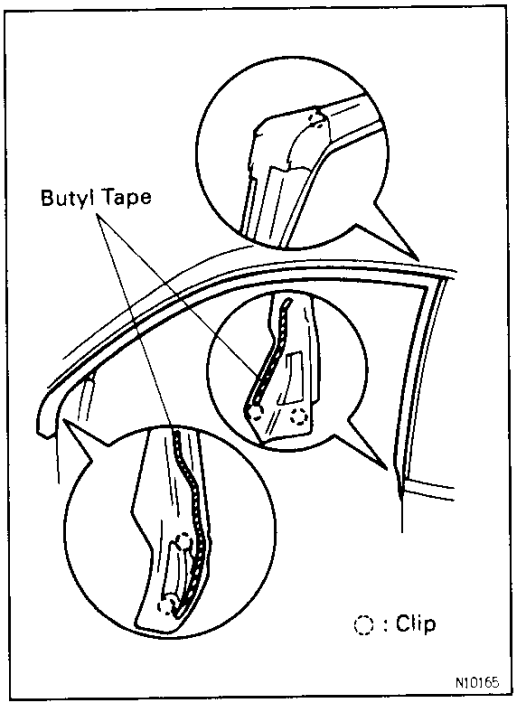

2. **REMOVE ROOF SIDE RAIL WEATHERSTRIP**
   Using a clip remover, remove 5 clips of the weatherstrip and remove the weatherstrip.
3. **REMOVE ROOF SIDE RAIL WEATHERSTRIP RETAINER**
   Remove 3 screws and the retainer.
4. **REMOVE ROOF DRIP SIDE FINISH MOULDING**
   Remove 8 screws and the moulding.

BO

BO1AD-01

ROOF DRIP SIDE FINISH MOULDING INSTALLATION

1. **INSTALL ROOF DRIP SIDE FINISH MOULDING**
   Install the moulding with 8 screws.
2. **INSTALL ROOF SIDE RAIL WEATHERSTRIP RETAINER**
   Install the retainer with 3 screws.

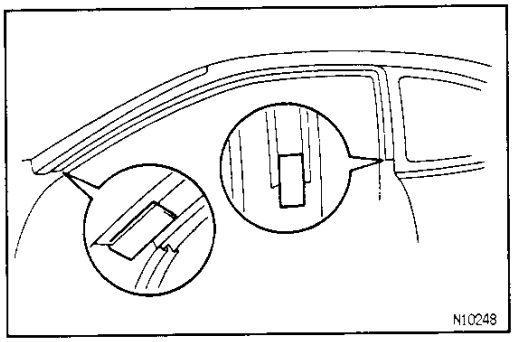

3. **INSTALL OUTSIDE GARNISH SEAL**
   Install the garnish seal to the retainer as shown in the illustration.

Downloaded from www.Manualslib.com manuals search engine

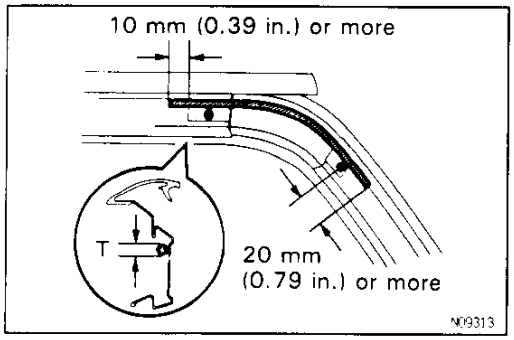

4. APPLY SEAL PACKING

Apply seal packing to the moulding and retainer as shown in the illustration.

T: 3 mm (0.12 in.) or more

Part No. 08826–00080

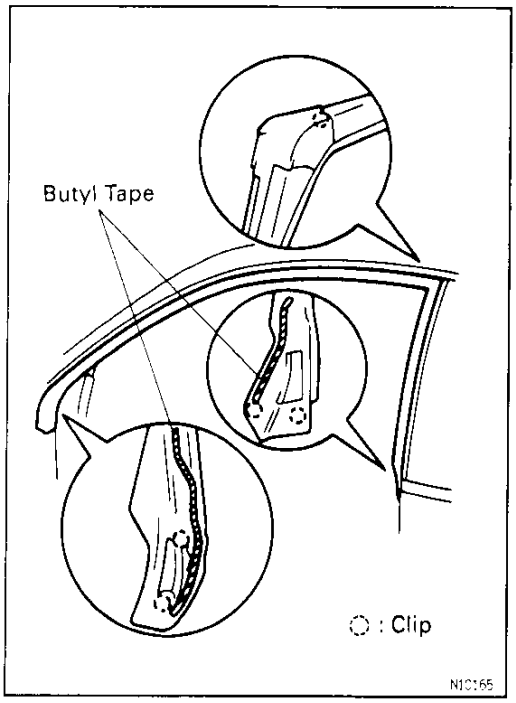

5. INSTALL ROOF SIDE RAIL WEATHERSTRIP

(a) Install the butyl tape to the weatherstrip as shown in the illustration.

(b) Install the weatherstrip.

6. INSTALL FRONT PILLAR LOWER GARNISH

BO

Downloaded from www.Manualslib.com manuals search engine

WINDSHIELD MOULDING
COMPONENTS

BO017-06

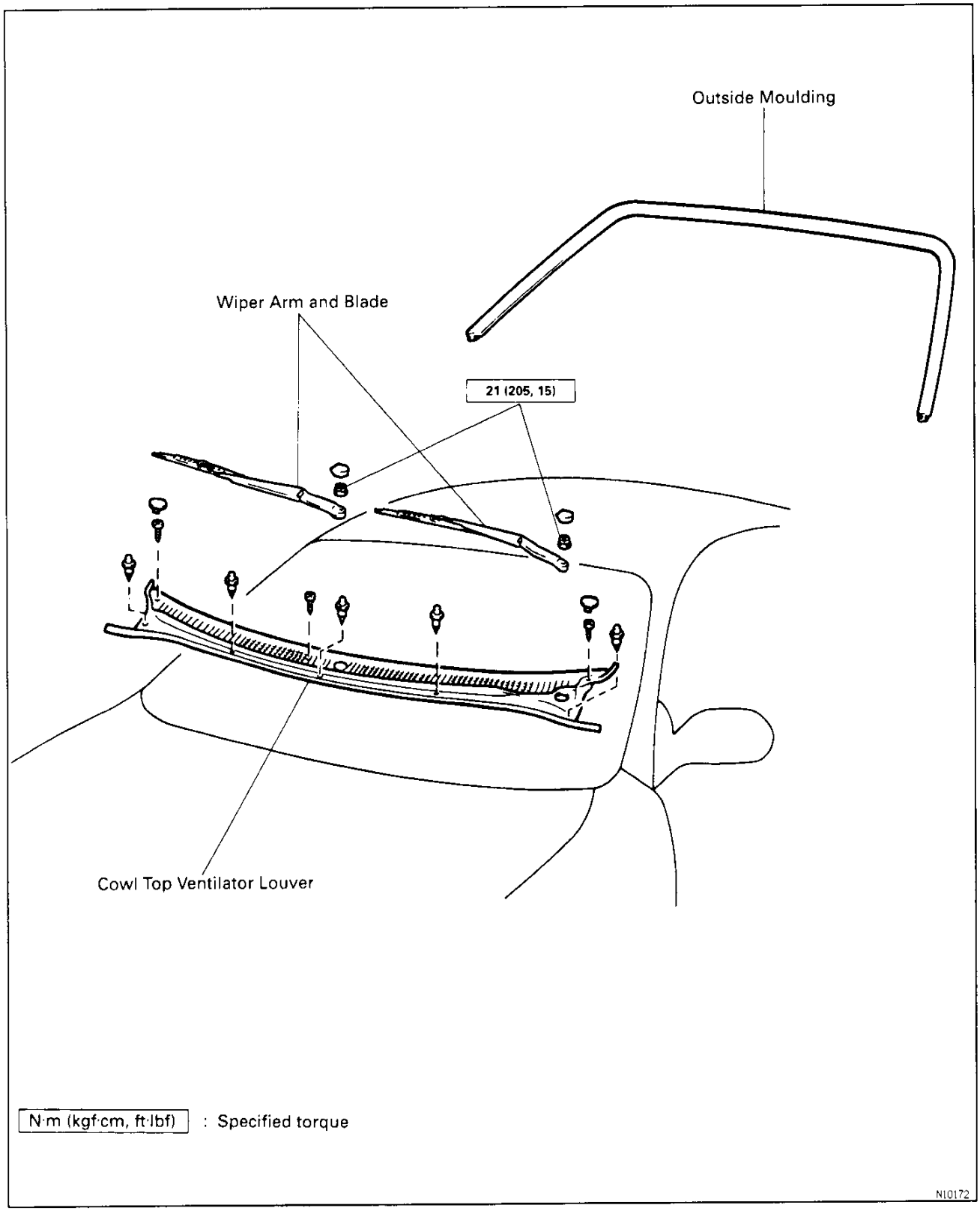

BO

Downloaded from www.Manualslib.com manuals search engine

WINDSHIELD MOULDING REMOVAL

B0099-04

1. REMOVE FOLLOWING PARTS:

(a) Wiper arm

(b) Cowl top ventilator louver

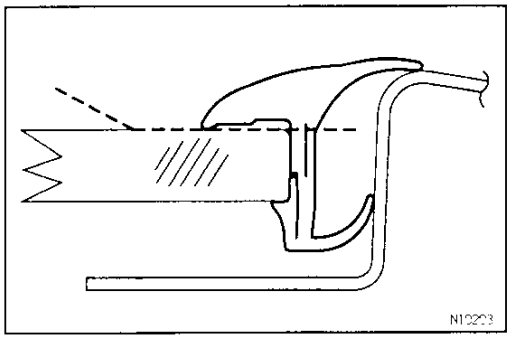

2. REMOVE WINDSHIELD MOULDING

(a) Using a knife, cut off the moulding as shown.

(b) Cut away the adhesive at the moulding installation area as much as possible.

NOTICE: Do not damage the body with the knife.

WINDSHIELD MOULDING INSTALLATION

B0019-07

BO

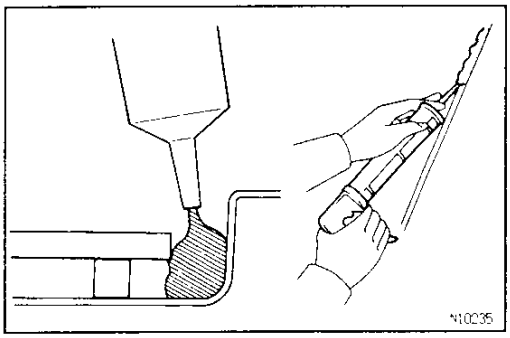

1. CUT ADHESIVE AT MOULDING INSTALLATION AREA

Using the knife, cut off the adhesive around the moulding installation area.

2. APPLY ADHESIVE AT MOULDING INSTALLATION AREA

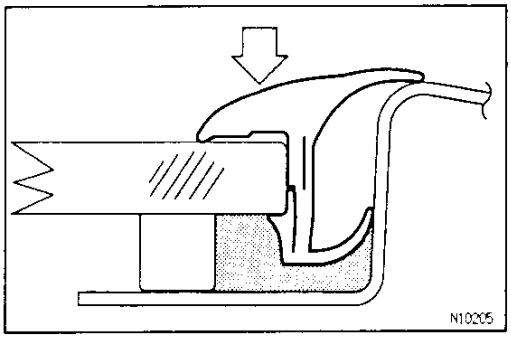

3. INSTALL WINDSHIELD MOULDING

Place the moulding onto the body and tap it by hand.

4. INSTALL FOLLOWING PARTS:

(a) Cowl top ventilator louver

(b) Wiper arm

Torque: 21 N·m (205 kgf·cm, 15 ft·lbf)

Downloaded from www.Manualslib.com manuals search engine

WINDSHIELD
COMPONENTS

BO02V–06

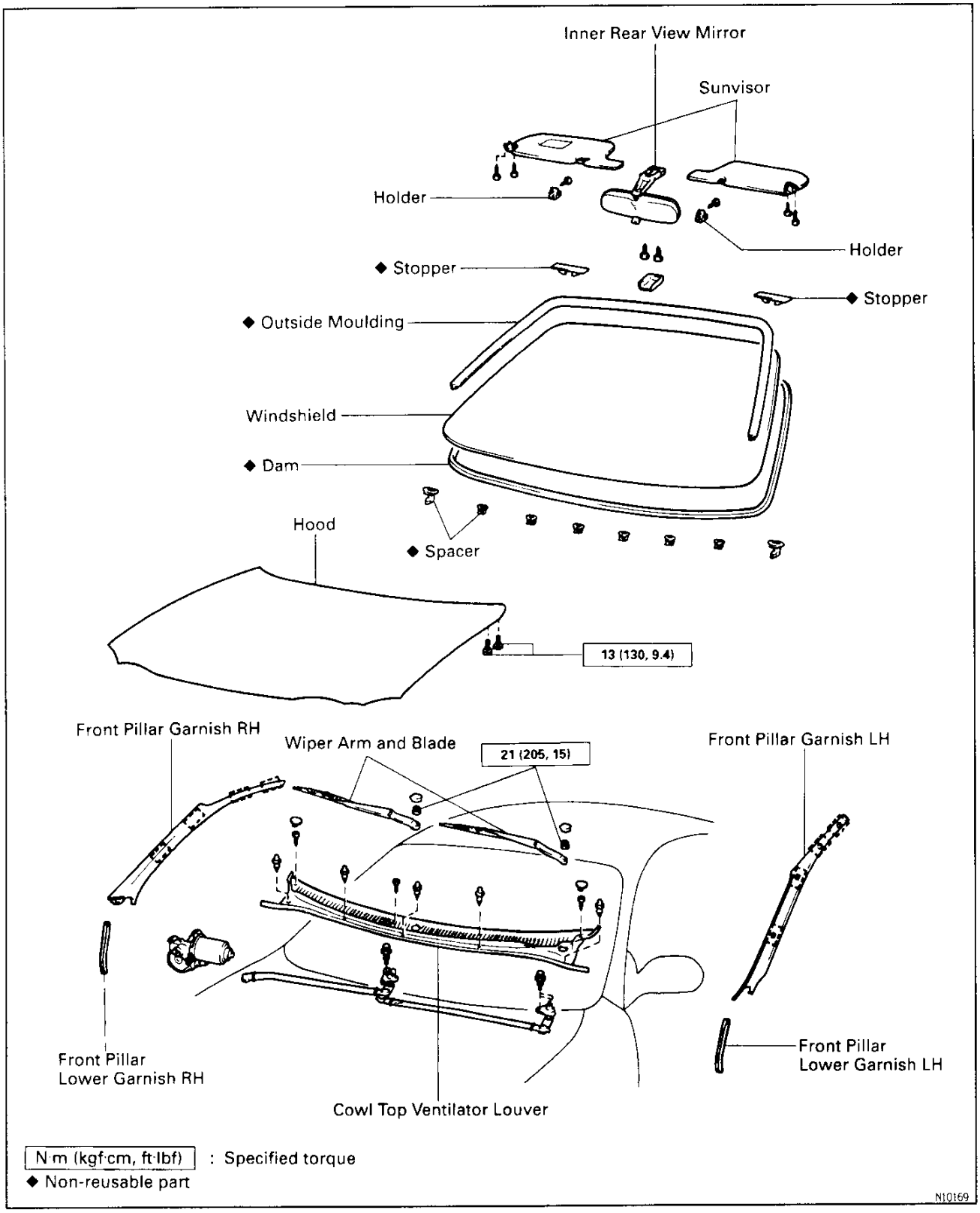

BO

Downloaded from www.Manualslib.com manuals search engine

BO1AE-02

WINDSHIELD REMOVAL

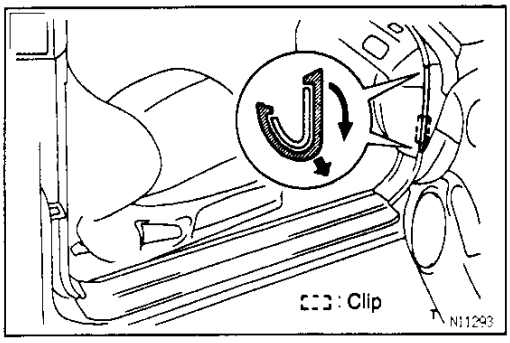

1. REMOVE FOLLOWING PARTS:

(a) Inner rear view mirror
(b) Sunvisor and holder
(c) Front pillar lower garnish

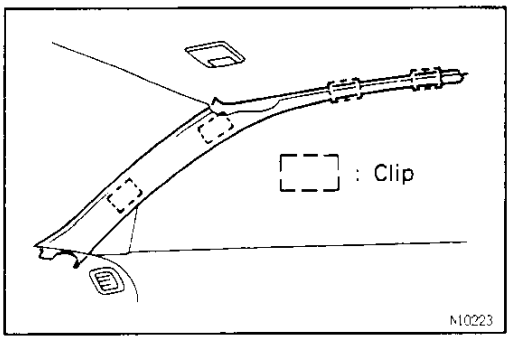

(d) Front pillar garnish
(e) Hood
(f) Wiper arm
(g) Cowl top ventilator louver

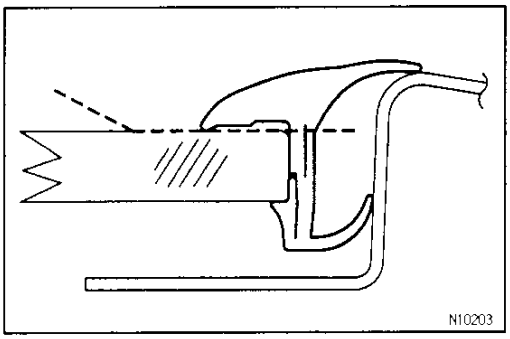

2. REMOVE WINDSHIELD MOULDING

Using a knife, cut off the moulding as shown.

NOTICE: Do not damage the body with the knife.

BO

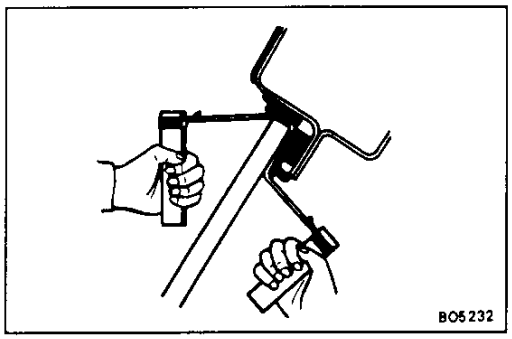

3. REMOVE WINDSHIELD GLASS

(a) Push piano wire through from the interior.
(b) Tie both wire ends to a wooden block or similar object.
HINT: Apply adhesive tape to the outer surface to keep the surface from being scratched.

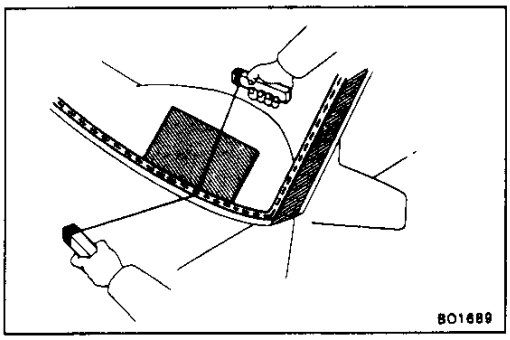

NOTICE: When separating the glass, take care not to damage the paint and interior and exterior ornaments. To prevent scratching the instrument panel when removing the windshield, place a plastic sheet between the piano wire and instrument panel.

(c) Cut the adhesive by pulling the piano wire around it.
(d) Remove the glass.
NOTICE: Leave as much of the adhesive on the body as possible when cutting off the glass.

Downloaded from www.Manualslib.com manuals search engine

90177-03

WINDSHIELD INSTALLATION

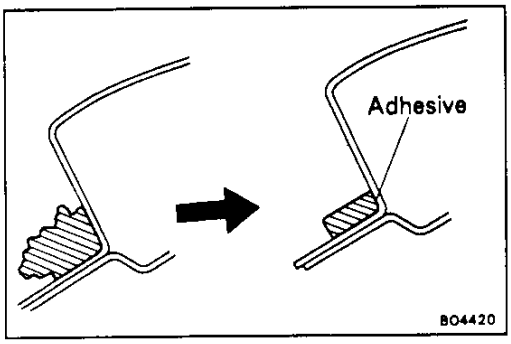

1. CLEAN AND SHAPE CONTACT SURFACE OF BODY

(a) Using a knife, cut away any rough areas on the body.
HINT: Leave as much of the adhesive on the body as possible.

(b) Clean the cutting surface of the adhesive with a piece of shop rag saturated in cleaner.
HINT: Even if all the adhesive has been removed, clean the body.

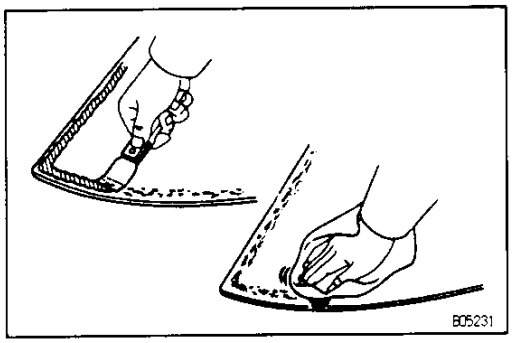

2. CLEAN REMOVED GLASS

(a) Using a scraper, remove the adhesive sticking to the glass.

(b) Clean the glass with cleaner.
NOTICE: Do not touch the glass after cleaning it.

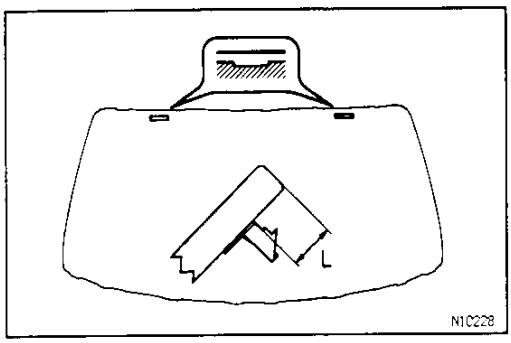

3. INSTALL STOPPERS

(a) Remove adhesive cover from stopper.

(b) Apply 2 stoppers with double stick tape to the glass as shown in the illustration.
L: 14.8 mm (0.583 in.)

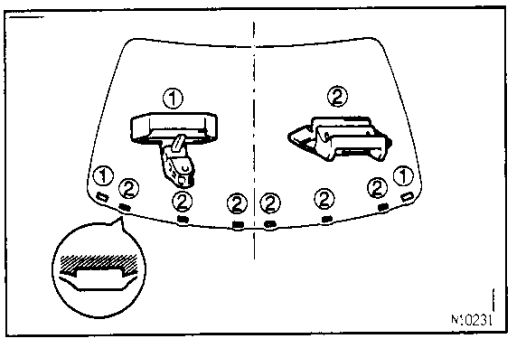

4. INSTALL SPACERS

(a) Remove adhesive cover from spacer.

(b) Apply 8 spacers with double stick tape to the glass as shown in the illustration.

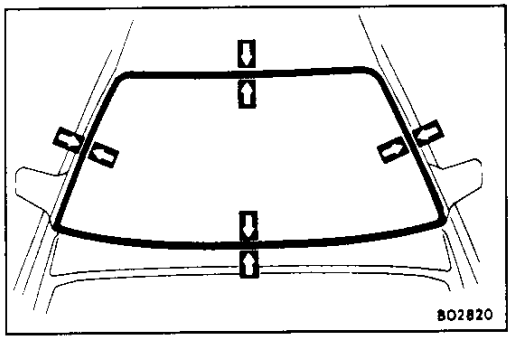

5. POSITION GLASS

(a) Place glass in correct position.

(b) Check that all contacting parts of the glass rim are perfectly even and do not make contact with the fasteners.

(c) Place reference marks between the glass and body.

(d) Remove the glass.

BO

Downloaded from www.Manualslib.com manuals search engine

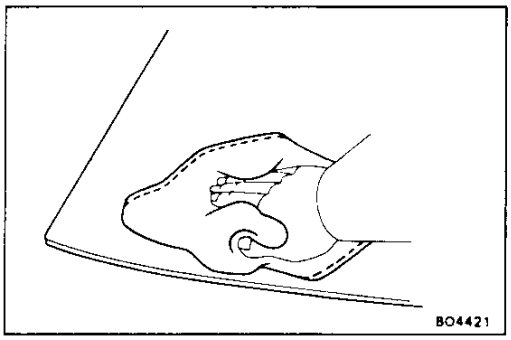

6. CLEAN CONTACT SURFACE OF GLASS

Using a cleaner, clean the contact surface black–colored area around the entire glass rim.

NOTICE: Do not touch the glass face after cleaning it.

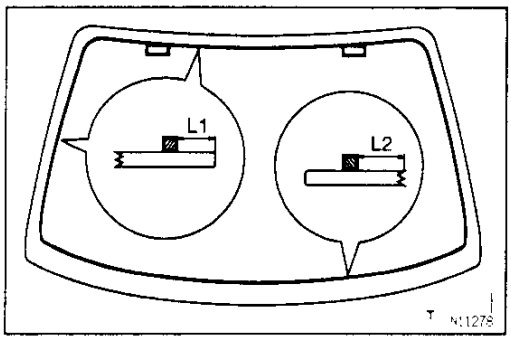

7. INSTALL DAM

Install the dam with double stick tape all the way around the glass except where the stoppers are installed as shown in the illustration.

NOTICE: Do not touch the glass face after cleaning it.

L1: 7 mm (0.28 in.)

L2: 25 mm (0.98 in.)

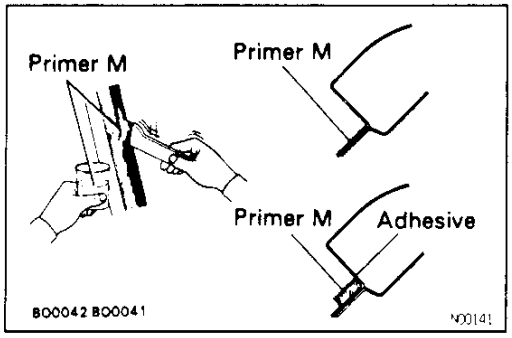

8. COAT CONTACT SURFACE OF BODY WITH PRIMER "M"

Using a brush, coat the contact surface on the body with Primer M.

NOTICE:

- **Let the primer coating dry for 3 minutes or more.**
- **Do not keep any of the opened primer M and G for later use.**

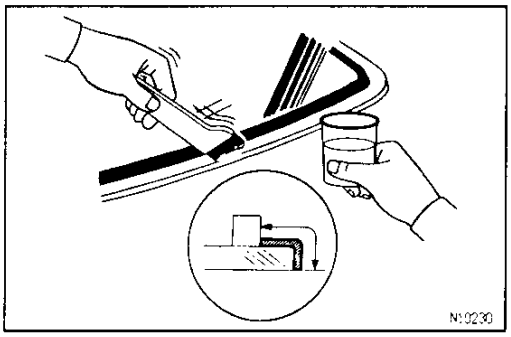

9. COAT CONTACT SURFACE OF GLASS WITH PRIMER "G"

(a) Using a brush or sponge, coat the edge of the glass and the contact surface with Primer G.

(b) Before the Primer dries, wipe it off with a clean shop rag.

NOTICE: Let the primer coating dry for 3 minutes or more.

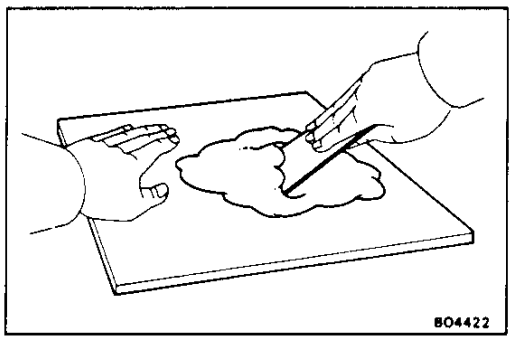

10. MIX ADHESIVE COATING

NOTICE:

- **Be sure that installation of the moulding is finished within the adhesive's usable time. (See step 2 on page BO–7)**
- **The mixture should be made in 5 minutes or less.**

(a) Thoroughly clean the glass plate and putty spatula with solvent.

BO

Downloaded from www.Manualslib.com manuals search engine

(b) Thoroughly mix 500 g (17.64 oz.) of the main agent and 75 g (2.65 oz.) of the hardening agent on a glass plate or like object with a putty spatula.

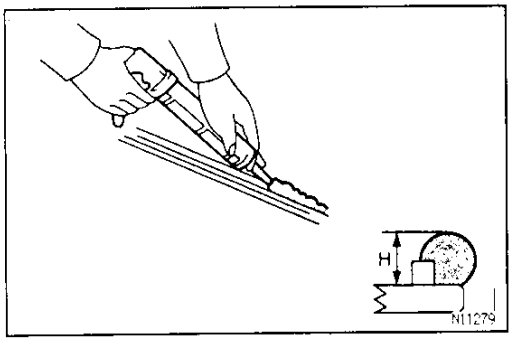

11. APPLY ADHESIVE

(a) Cut off the tip of the cartridge nozzle. Fill the cartridge with adhesive.

(b) Load the cartridge into the sealer gun.

(c) Coat the glass with adhesive as shown.
H: 12 mm (0.47 in.)

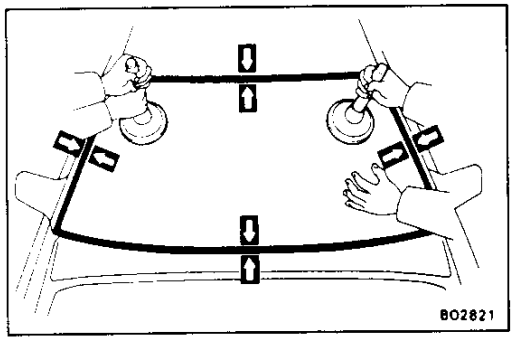

12. INSTALL GLASS

(a) Position the glass so that the reference marks are lined up, and press in gently along the rim.

BO

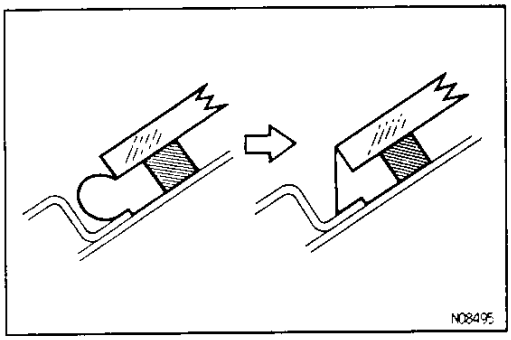

(b) Using a spatula, apply adhesive on the glass rim.
HINT: Confirm that the dam is attached to the body panel as shown in the illustration.

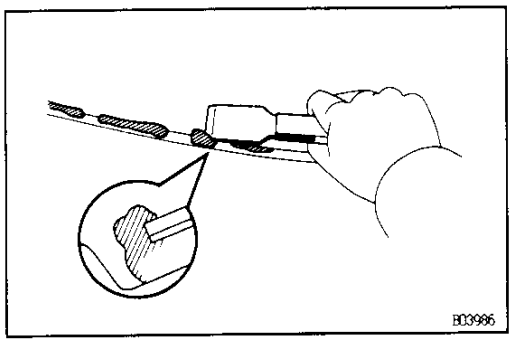

(c) Use a scraper to remove any excess or protruding adhesive.

(d) Fasten glass securely until the adhesive sets.

Downloaded from www.Manualslib.com manuals search engine

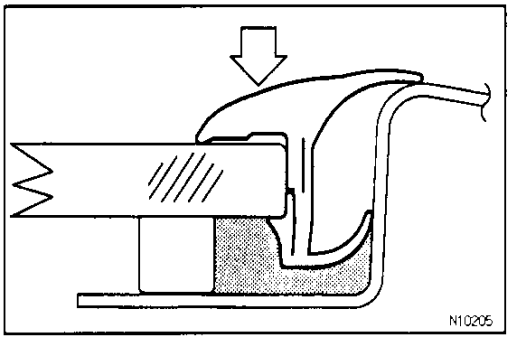

13. INSTALL WINDSHIELD MOULDING

Place the moulding onto the body and install it by hand.

14. INSPECT FOR LEAKS AND REPAIR

(a) Perform a leak test after the hardening time has elapsed.

(b) Seal any leak with auto glass sealer.
Part No. 08833–00030

15. INSTALL FOLLOWING PARTS:

(a) Cowl top ventilator louver

(b) Wiper arm
Torque: 21 N·m (205 kgf·cm, 15 ft·lbf)

(c) Hood
Torque: 13 N·m (130 kgf·cm, 9.4 ft·lbf)

(d) Front pillar garnish

(e) Front pillar lower garnish

(f) Sunvisor and holder

(g) Inner rear view mirror

Downloaded from www.Manualslib.com manuals search engine

QUARTER WINDOW GLASS
COMPONENTS

BOOC1-06

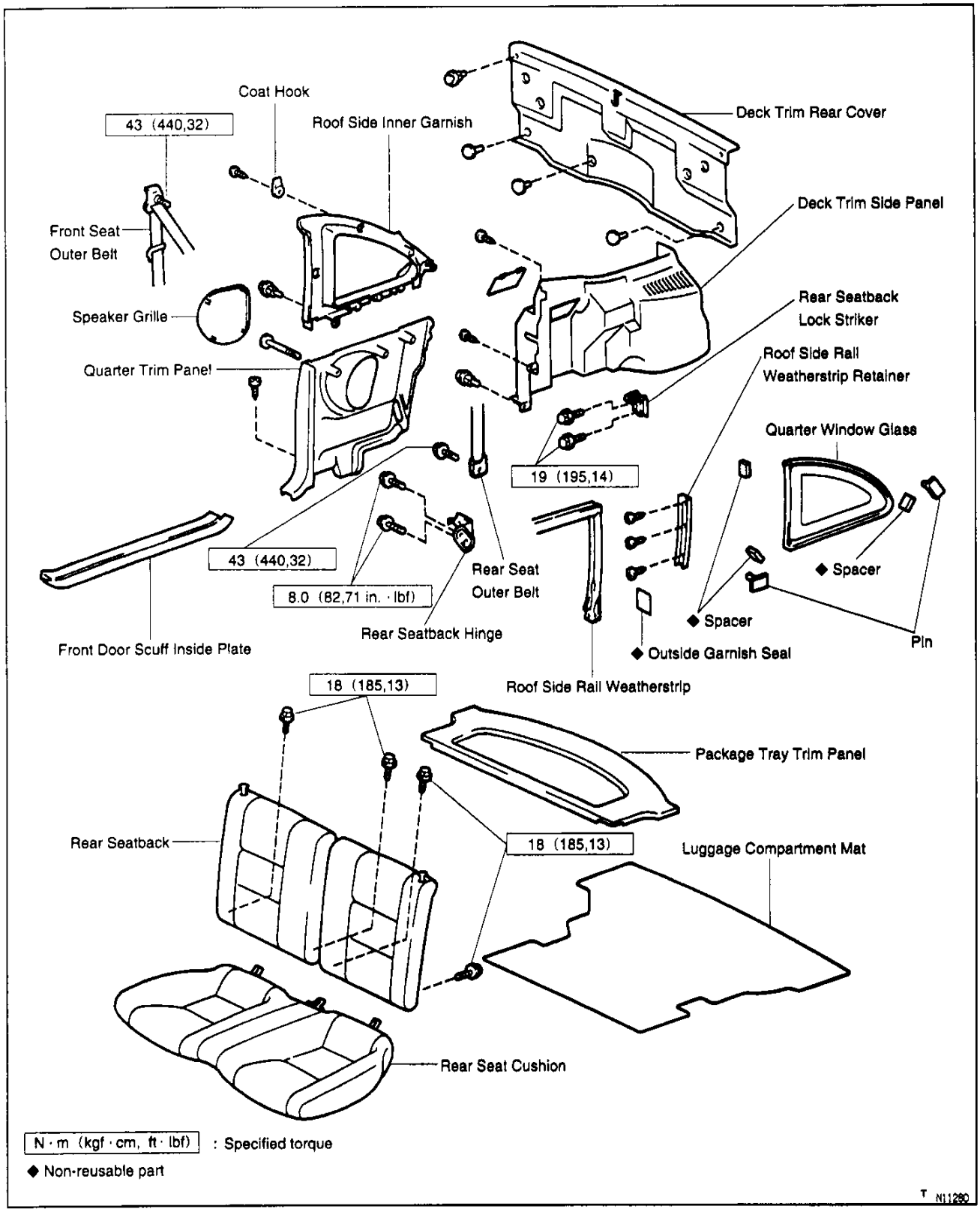

BO

Downloaded from www.Manualslib.com manuals search engine

QUARTER WINDOW GLASS REMOVAL

BO1AF-02

1. REMOVE FOLLOWING PARTS:
(See pages BO–69 to BO–70)

(a) Package tray trim panel
(b) Luggage compartment mat
(c) Rear seat back
(d) Rear seat cushion
(e) Deck trim rear cover
(f) Deck trim side panel
(g) Front door scuff inside plate
(h) Speaker grille
(i) Rear seatback hinge and lock striker
(j) Rear seat outer belt floor anchor
(k) Quarter trim panel
(l) Front seat outer belt shoulder anchor
(m) Roof side inner garnish

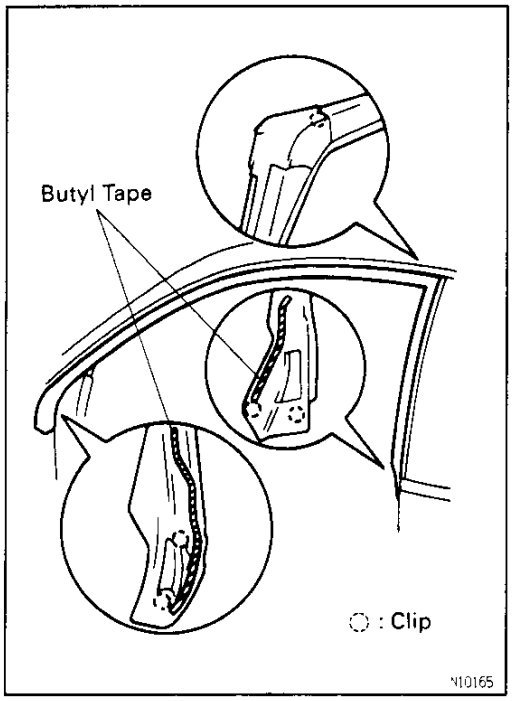

2. REMOVE ROOF SIDE RAIL WEATHERSTRIP

(a) Using the clip remover, remove 3 clips from the rear side of the weatherstrip.
(b) Remove the rear side of the weatherstrip from the retainer.

3. REMOVE ROOF SIDE RAIL WEATHERSTRIP RETAINER

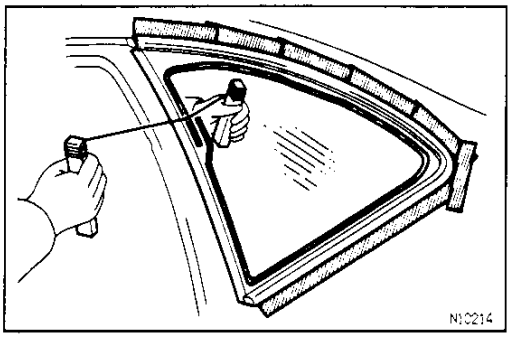

4. REMOVE QUARTER WINDOW GLASS

(a) Push piano wire through from the interior.
(b) Tie both wire ends to a wooden block or similar object.
HINT: Apply adhesive tape to the outer surface to keep the surface from being scratched.
NOTICE: When separating the glass, take care not to damage the paint and exterior.
(c) Cut the adhesive by pulling the piano wire around it.

Downloaded from www.Manualslib.com manuals search engine

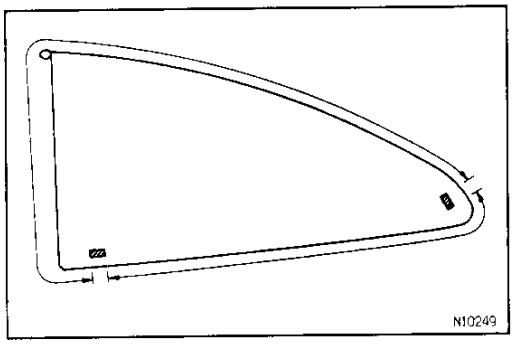

HINT: Cut the adhesive areas as shown in the illustration, leaving the adhesive where the pins are.

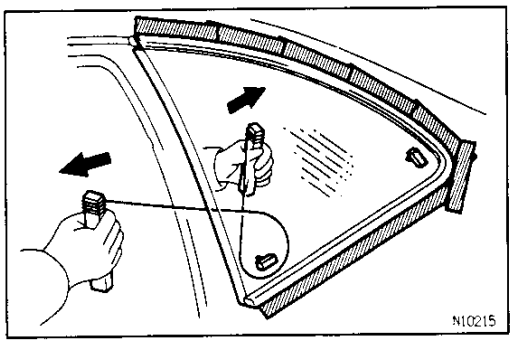

(d) Using piano wire as shown in the illustration, cut off the rest of the adhesive.

(e) Remove the glass.
NOTICE: Leave as much of the adhesive on the body as possible when cutting off the glass.

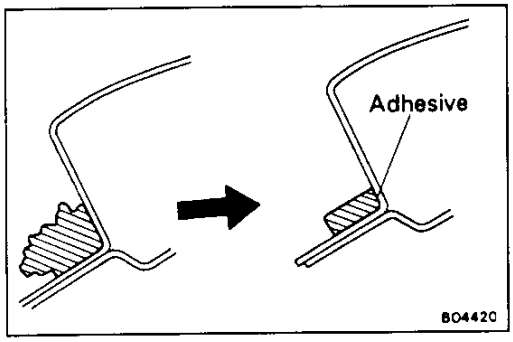

BO188-01

QUARTER WINDOW GLASS INSTALLATION

BO

1. CLEAN AND SHAPE CONTACT SURFACE OF BODY

(a) Using a knife, cut away any rough areas on the body.
HINT: Leave as much of the adhesive on the body as possible.

(b) Clean the cutting surface of the adhesive with a piece of shop rag saturated in cleaner.
HINT: Even if all the adhesive has been removed, clean the body.

2. CLEAN REMOVED GLASS

(a) Using a scraper, remove the adhesive sticking to the glass.

(b) Clean the glass with cleaner.
NOTICE: Do not touch the glass after cleaning it.

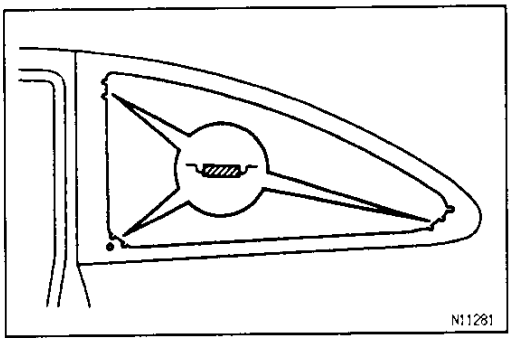

3. INSTALL SPACER

Install 3 spacers to the body panel by double stick tape as shown in the illustration.
HINT: It is not necessary to install pins to the glass. Pins are only used for positioning the glass on the production line.

Downloaded from www.Manualslib.com manuals search engine

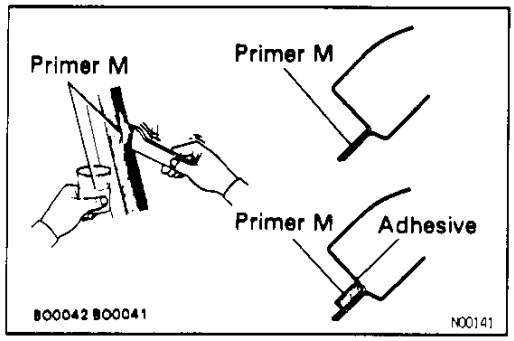

4. COAT CONTACT SURFACE OF BODY WITH PRIMER "M"

Using a brush, coat the contact surface on the body with Primer M.

NOTICE:

- **Let the primer coating dry for 3 minutes or more.**
- **Do not keep any of the opened primer M and G for later use.**

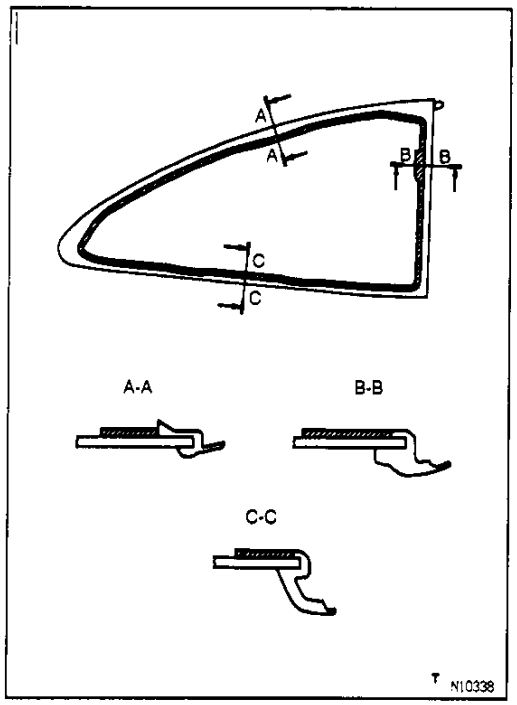

5. COAT CONTACT SURFACE OF GLASS WITH PRIMER "G"

(a) Using a brush or sponge, coat the edge of the glass and the contact surface with Primer G.

(b) Before the primer dries, wipe it off with a clean shop rag.

NOTICE: Let the primer coating dry for 3 minutes or more.

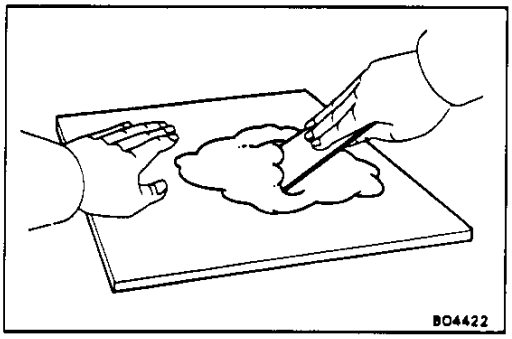

6. MIX ADHESIVE COATING

NOTICE:

- **Be sure that installation of the moulding is finished within the adhesive's usable time. (See step 2 on page BO–7)**
- **The mixture should be made in 5 minutes or less.**

(a) Thoroughly clean the glass plate and putty spatula with solvent.

(b) Thoroughly mix 500 g (17.64 oz.) of the main agent and 75 g (2.65 oz.) of the hardening agent on a glass plate or similar object with a putty spatula.

BO

Downloaded from www.Manualslib.com manuals search engine

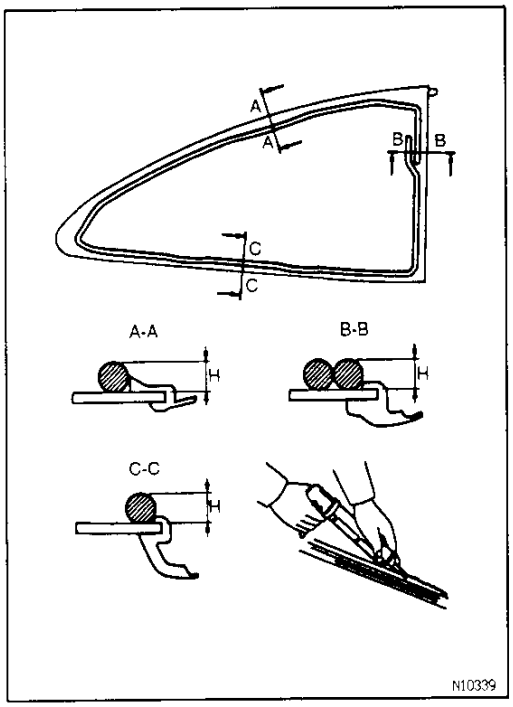

7. APPLY ADHESIVE

(a) Cut off the tip of the cartridge nozzle. Fill the cartridge with adhesive.

(b) Load the cartridge into the sealer gun.

(c) Coat the glass with adhesive as shown.
H: 12 mm (0.47 in.)

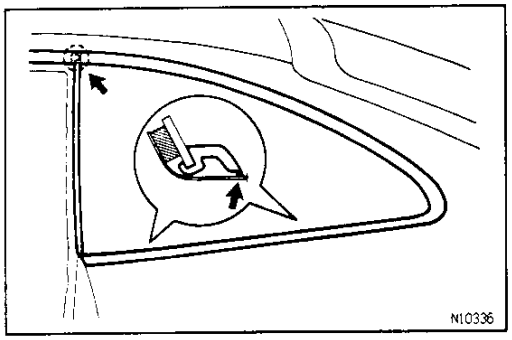

8. INSTALL QUARTER WINDOW GLASS

(a) Install the glass to the body.
HINT: First fit the glass to the moulding and then to the body panel as shown in the illustration.

(b) Use adhesive tape to keep the glass tight against the body.

9. INSPECT FOR LEAKS AND REPAIR

(a) Perform a leak test after the hardening time has elapsed.

(b) Seal any leak with auto glass sealer.
Part No. 08833–00030

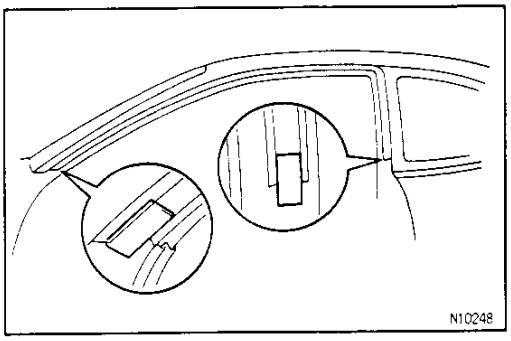

10. INSTALL REMOVED PARTS IN REVERSE ORDER TO REMOVAL ORDER

(a) Install the garnish seal to the retainer as shown in the illustration.

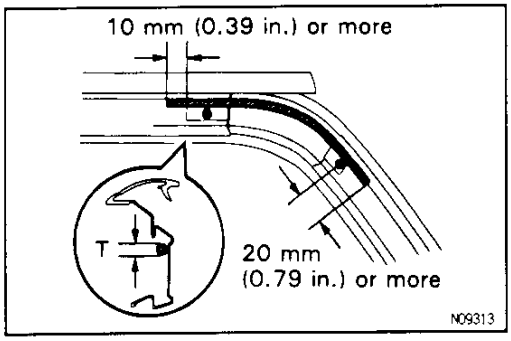

(b) Apply seal packing to the moulding and retainer as shown in the illustration.
T: 3 mm (0.12 in.) or more
Part No. 08826–00080

BO

Downloaded from www.Manualslib.com manuals search engine

BACK DOOR MOULDING AND GLASS

BOODM – 03

COMPONENTS

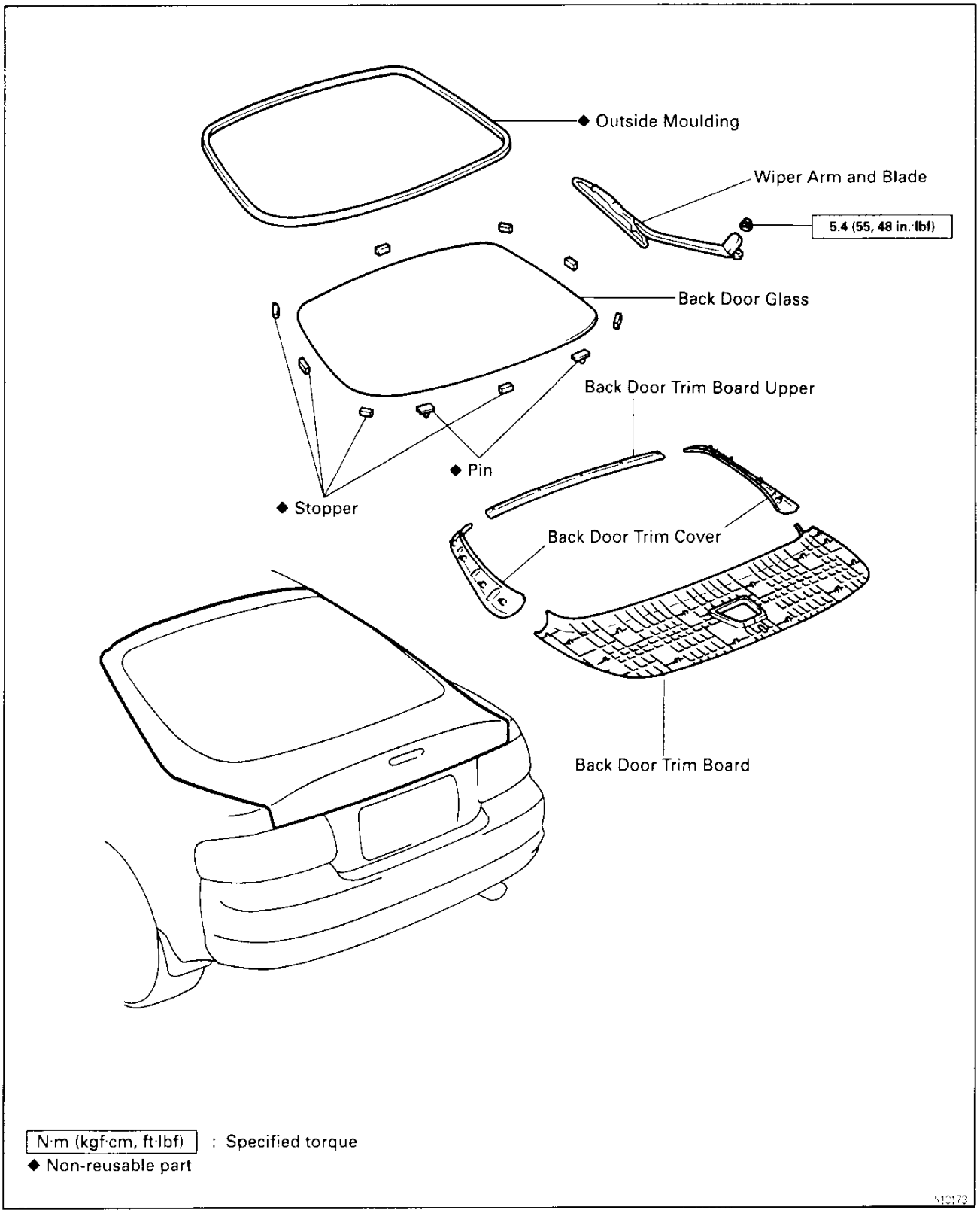

BO

Downloaded from www.Manualslib.com manuals search engine

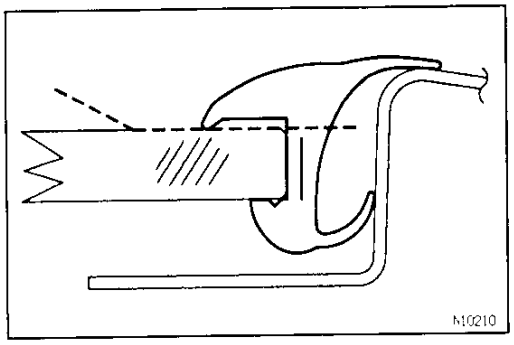

BACK DOOR MOULDING REMOVAL

BO1AH-01

1. **REMOVE REAR WIPER ARM**
2. **REMOVE BACK DOOR MOULDING**

(a) Using a knife, cut off the moulding as shown.

(b) Cut away the adhesive at the moulding installation area as much as possible.

NOTICE: Do not damage the body with the knife.

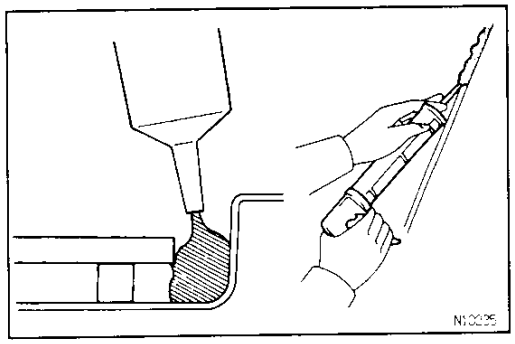

BACK DOOR MOULDING INSTALLATION

BO1AJ-01

1. **CUT ADHESIVE AT MOULDING INSTALLATION AREA**
   Using the knife, cut off the adhesive around the moulding installation area.
2. **APPLY ADHESIVE AT MOULDING INSTALLATION AREA**

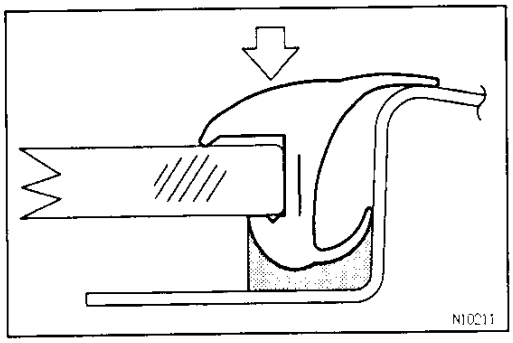

3. **INSTALL BACK DOOR MOULDING**
   Place the moulding onto the body and tap it by hand.
4. **INSTALL REAR WIPER ARM**
   Torque: 5.4 N·m (55 kgf·cm, 48 in.·lbf)

BO

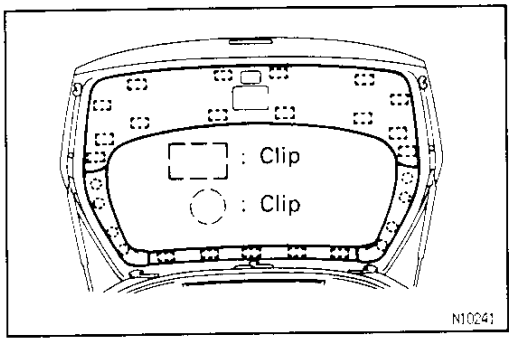

BACK DOOR GLASS REMOVAL

BO1AK-02

1. **DISCONNECT DEFOGGER CONNECTOR**
2. **REMOVE FOLLOWING PARTS:**

(a) Back door trim board and board upper

(b) Back door trim cover LH and RH

(c) Rear wiper arm

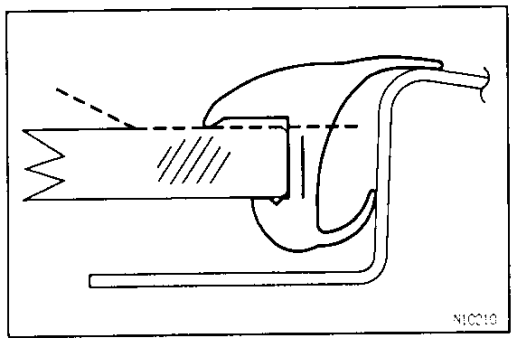

3. **REMOVE BACK DOOR MOULDING**
   Using a knife, cut off the moulding as shown.
   NOTICE: Do not damage the body with the knife.

Downloaded from www.Manualslib.com manuals search engine

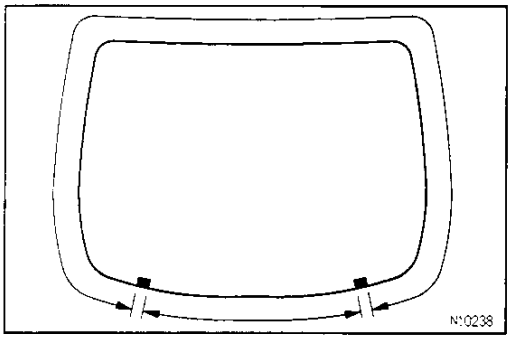

4. REMOVE BACK DOOR GLASS

HINT: Remove the glass in the same manner as the quarter window glass. Cut the adhesive areas as shown in the illustration, leaving the adhesive where the pins are. (See pages BO–38 and BO–39)

BACK DOOR GLASS INSTALLATION

BO1AL–02

HINT: Install the glass in the same manner as the quarter glass. (See pages BO–39 to BO–41)

BO

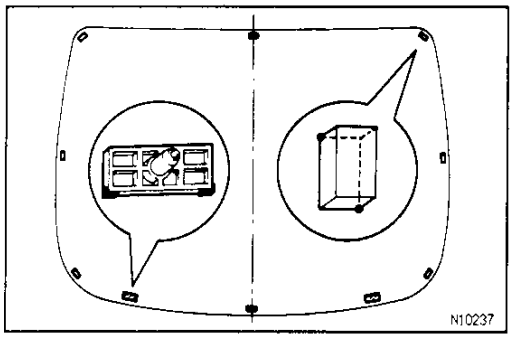

1. INSTALL STOPPER AND PIN

Positioning at marks printed on the glass, install 8 stoppers and 2 pins with double stick tape to the glass.

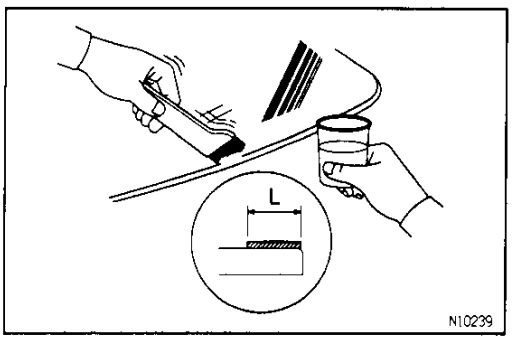

2. INSTALL BACK DOOR GLASS

(a) Coat contact surface of the glass with primer "G".
L: 7 mm (0.28 in.)

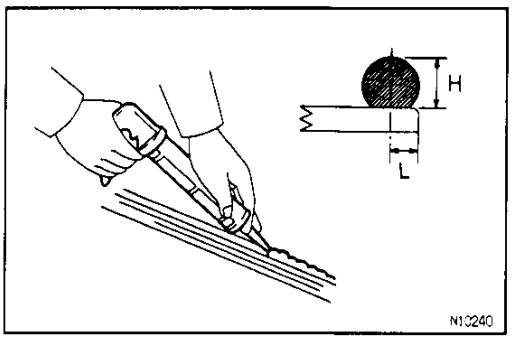

(b) Apply adhesive.
H: 12 mm (0.47 in.)
L: 3 mm (0.12 in.)

3. INSTALL REAR WIPER ARM
Torque: 5.4 N·m (55 kgf·cm, 48 in.·lbf)

4. CONNECT DEFOGGER CONNECTOR

5. INSTALL FOLLOWING PARTS:

(a) Back door trim cover LH and RH

(b) Back door trim board and board upper

Downloaded from www.Manualslib.com manuals search engine

SLIDING ROOF
COMPONENTS

901A8-02

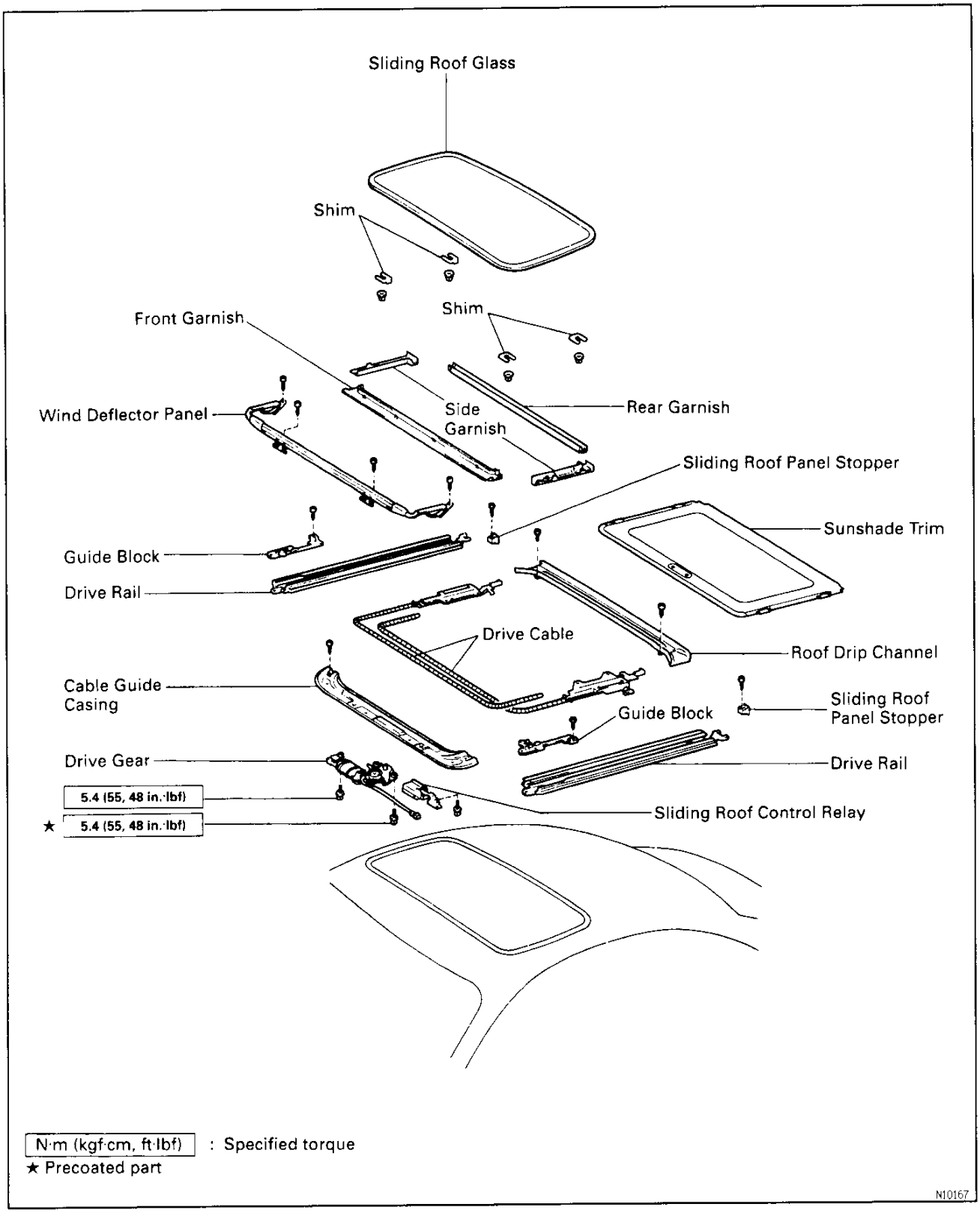

BO

Downloaded from www.Manualslib.com manuals search engine

COMPONENTS (Cont'd)

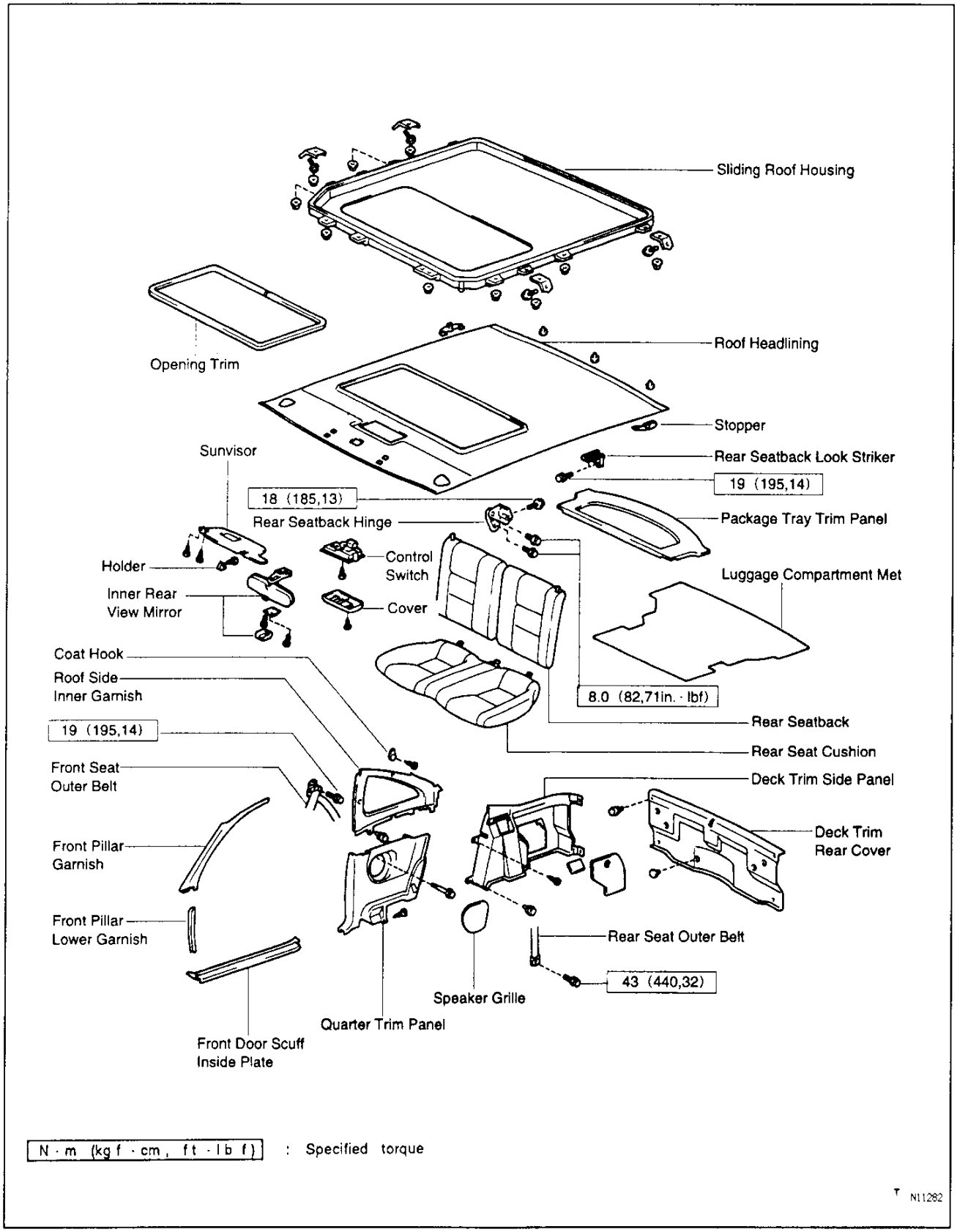

BO

Downloaded from www.Manualslib.com manuals search engine

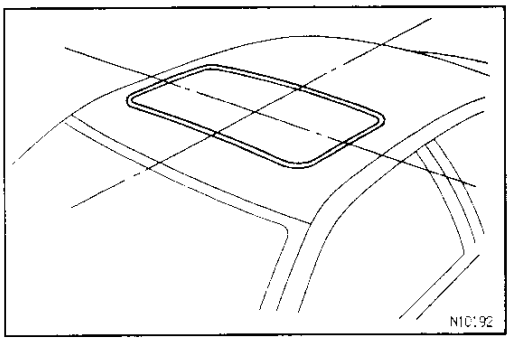

ON–VEHICLE INSPECTION

INSPECT SLIDING ROOF GLASS ALIGNMENT

(a) Start the engine and check the operation time of the sliding roof.
Operation time:
Approx. 6 secs.

(b) Check for abnormal noise or binding during operation.

(c) With the sliding roof fully closed, check for water leakage.

(d) Check for a difference in level between the sliding roof weatherstrip and roof panel.
Front end:
0±1.5 mm (0±0.059 in.)
Rear end:
0±1.5 mm (0±0.059 in.)

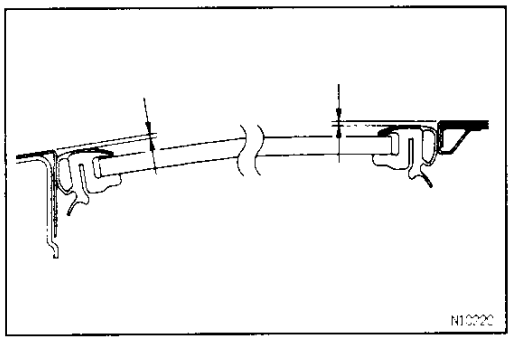

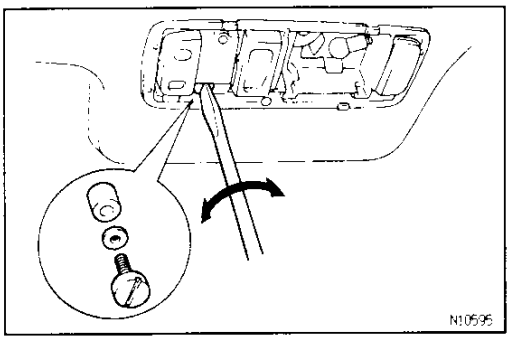

If the sliding roof does not operate:

(e) Remove the control switch cover.

(f) Remove the large screw inside.

(g) Manually operate the sliding roof by inserting a screwdriver into the hole and turning the drive shaft.

BO

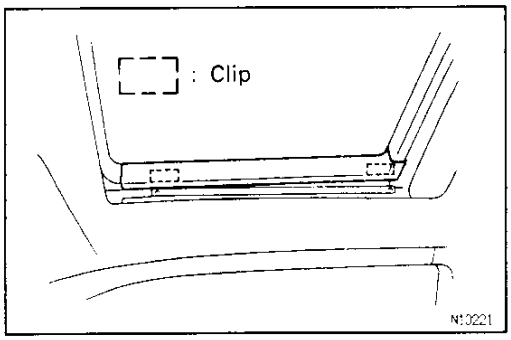

SLIDING ROOF ADJUSTMENT

1. REMOVE SLIDING ROOF GARNISHES

Before making adjustments, remove the left and right sliding roof garnishes.
HINT: After adjustment, reinstall the sliding roof garnishes.

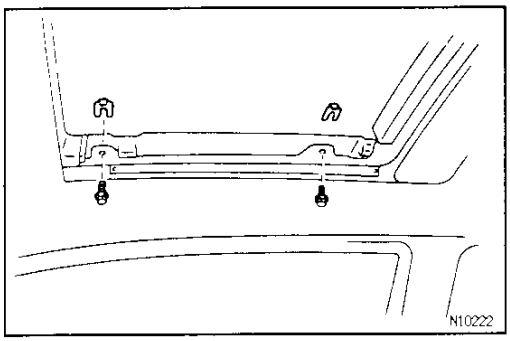

2. TO ADJUST LEVEL DIFFERENCE

Adjust by increasing or decreasing the number of shims between the bracket and sliding roof.

Downloaded from www.Manualslib.com manuals search engine

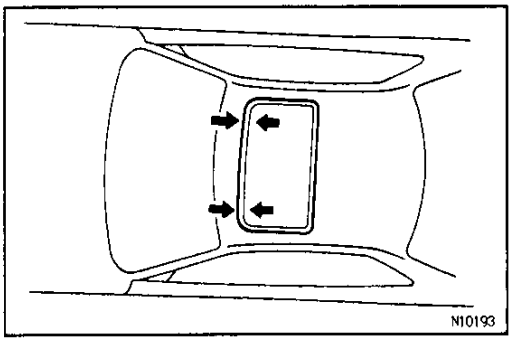

3. TO ADJUST FORWARD OR REARWARD

(a) Adjust by loosening the sliding roof installation nuts, and move the sliding roof bracket forwards and backwards.

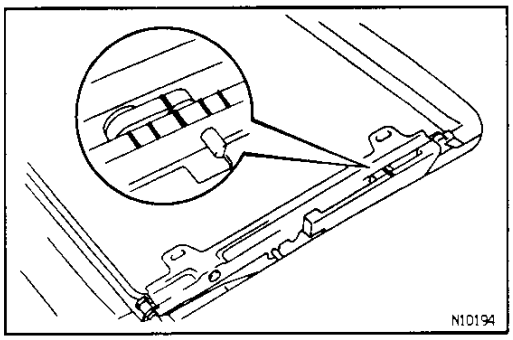

(b) When the front or rear alignment is not correct, remove the glass and adjust the drive rail.

(c) Using a screwdriver, slide the link forwards or backwards to align the marks as shown.

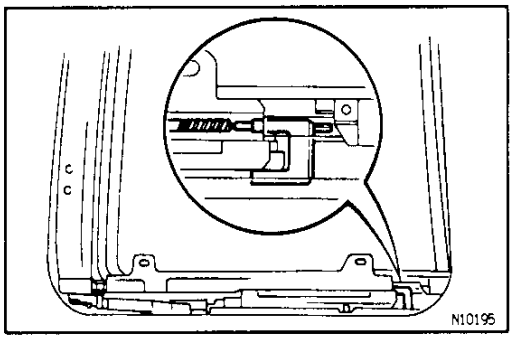

BO

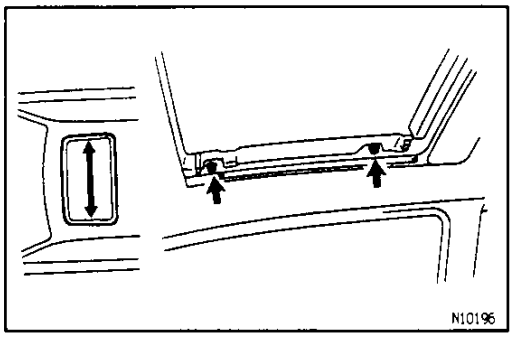

4. TO ADJUST RIGHT OR LEFT

Adjust by loosening the sliding roof glass installation nuts, and move the sliding roof to the right and left.

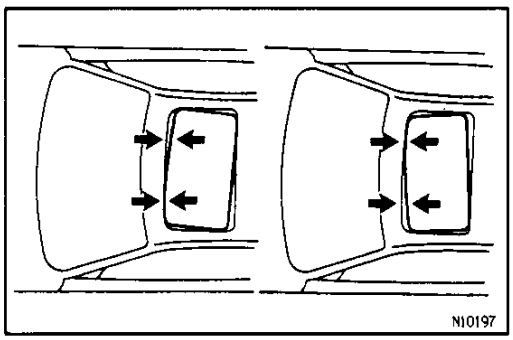

5. TO ADJUST CLEARANCE

(Difference in left and right clearance)

Downloaded from www.Manualslib.com manuals search engine

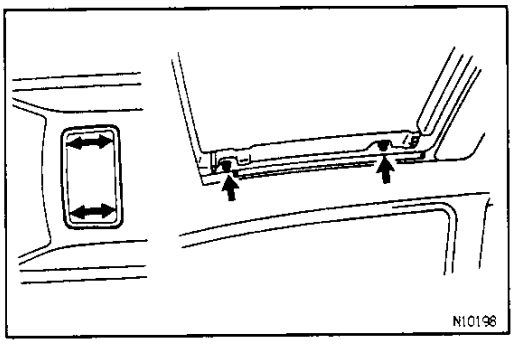

Adjust by loosening the sliding roof installation nuts and readjust the sliding roof to the proper position.

BG1AU-02

SLIDING ROOF REMOVAL

1. DISCONNECT NEGATIVE (−) TERMINAL CABLE FROM BATTERY

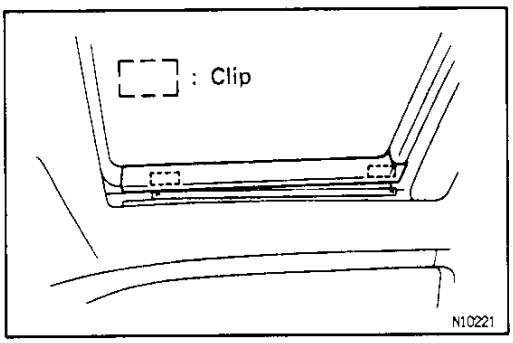

2. REMOVE SLIDING ROOF GARNISHES

Using a screwdriver, remove the following garnishes.
HINT: Tape a screwdriver tip before use.

(a) Side garnish

BO

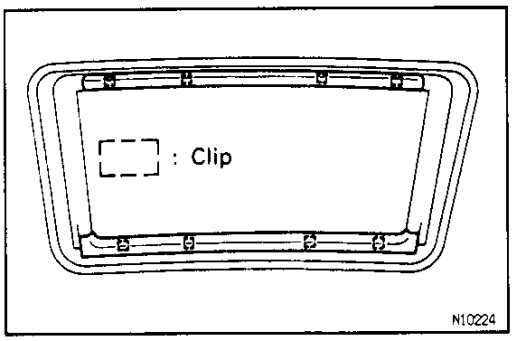

(b) Front and rear garnish

3. REMOVE SLIDING ROOF GLASS

(a) Remove 4 screws.
(b) Pull the glass upwards to remove it.

4. REMOVE ROOF HEADLINING

(See pages BO−69 to BO−70)

5. REMOVE FOLLOWING PARTS:

(a) Sliding roof control relay
(b) Drive gear
(c) Roof drip channel
(d) Wind deflector panel

Downloaded from www.Manualslib.com manuals search engine

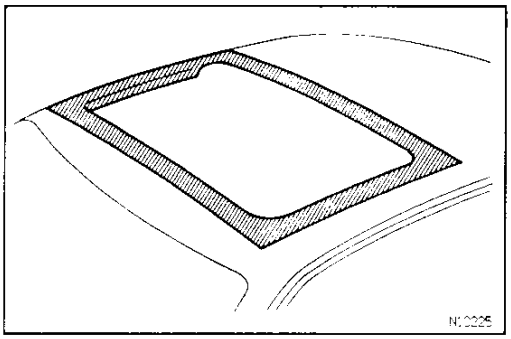

6. REMOVE CABLE GUIDE CASING ASSEMBLY

(a) Slide the drive cable forwards.
(b) Remove 12 screws.
(c) Apply adhesive tape to protect the body.

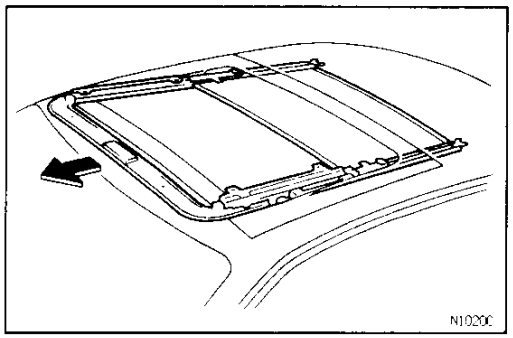

(d) Pull the cable guide casing assembly forward to remove.

SLIDING ROOF DISASSEMBLY

BODDV-02

BO

1. REMOVE FOLLOWING PARTS:

(a) Sliding roof panel stopper
(b) Sunshade trim

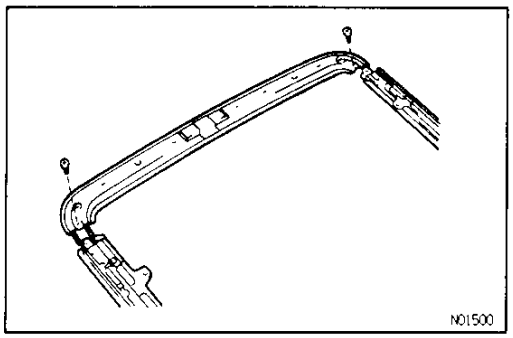

(c) Cable guide casing

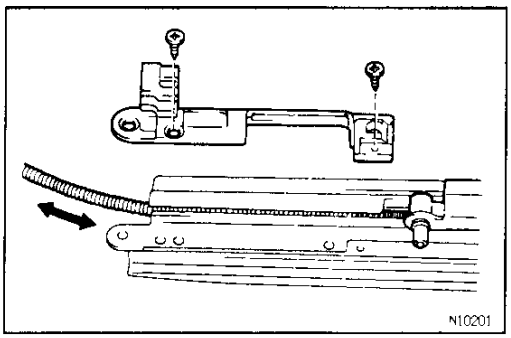

2. REMOVE DRIVE CABLE

(a) Remove 2 screws and the cable guide block.
(b) Pull the drive cable from the guide rail.

Downloaded from www.Manualslib.com manuals search engine

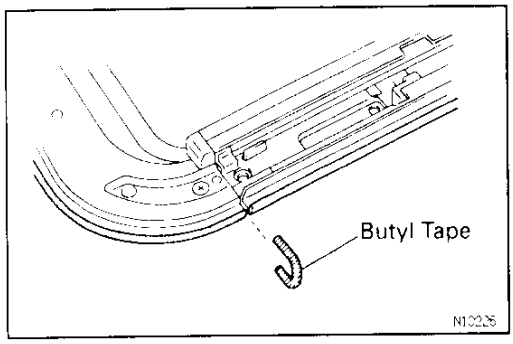

SLIDING ROOF ASSEMBLY

BO1AV-01

ASSEMBLE SLIDING ROOF PARTS BY FOLLOWING DISASSEMBLY SEQUENCE IN REVERSE

HINT: When installing the cable guide casing, use butyl tape to cover the cut position of the weatherstrip at the connection between the guide casing and guide rail.

SLIDING ROOF INSTALLATION

BO1AW-01

INSTALL SLIDING ROOF PARTS BY FOLLOWING REMOVAL SEQUENCE IN REVERSE

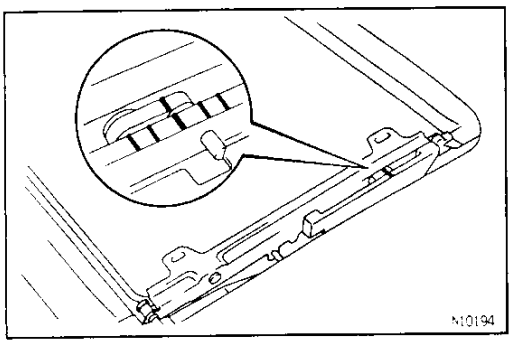

1. ADJUST DRIVE RAIL

(a) Operate the drive rail to a closed and tilted down position.

(b) Using a screwdriver, slide the link forward or rearward to align the marks as shown.

BO

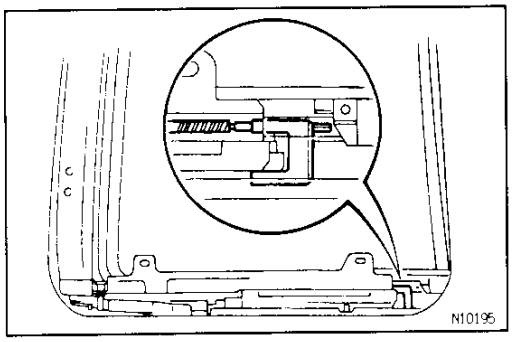

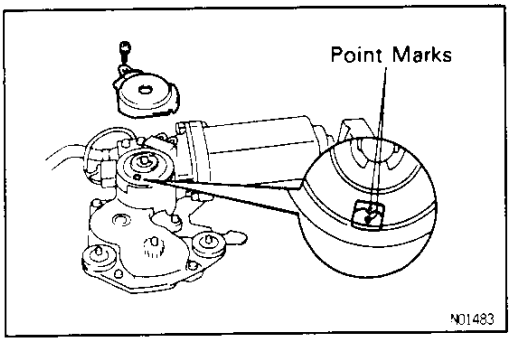

2. INSTALL DRIVE GEAR

(a) Remove the screw and cam plate cover.

(b) Remove the large screw, washers and shims.

(c) Turn the drive shaft by screwdriver to align the housing and gear point mark as shown.

(d) Install the cam plate cover with the screw.

Downloaded from www.Manualslib.com manuals search engine

INSTRUMENT PANEL
COMPONENTS

B01AX-03

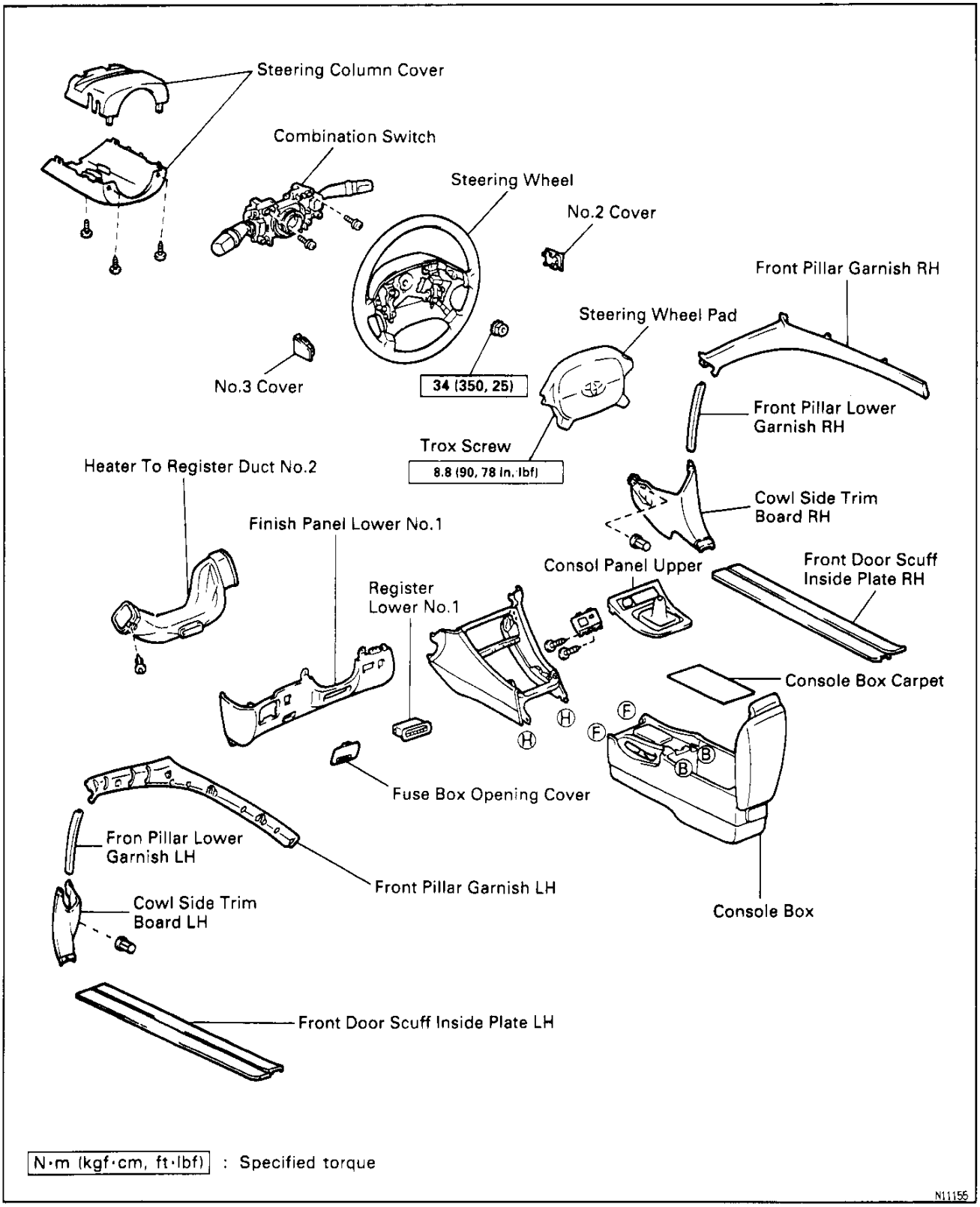

BO

Downloaded from www.Manualslib.com manuals search engine

COMPONENTS (Cont'd)

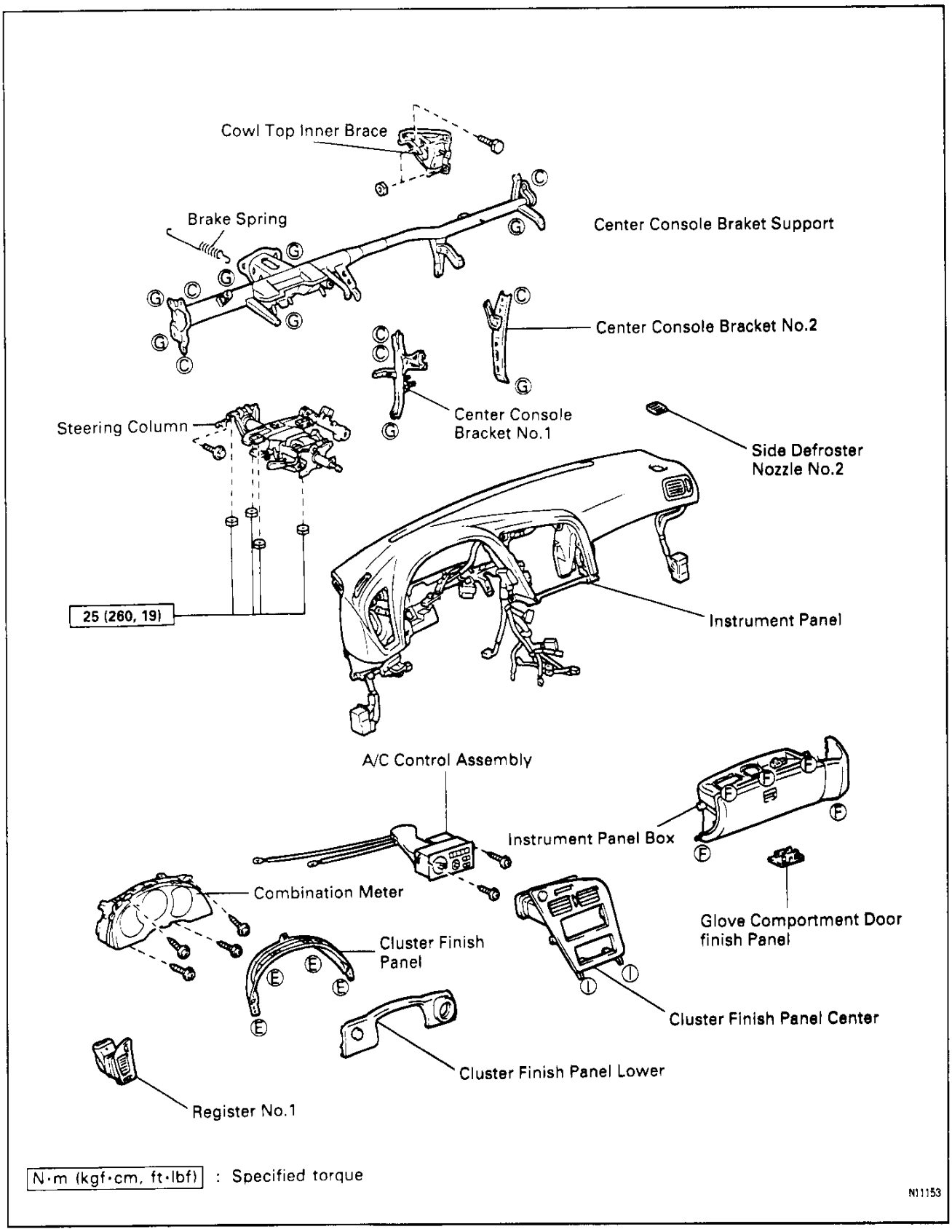

Downloaded from www.Manualslib.com manuals search engine

COMPONENTS (Cont'd)

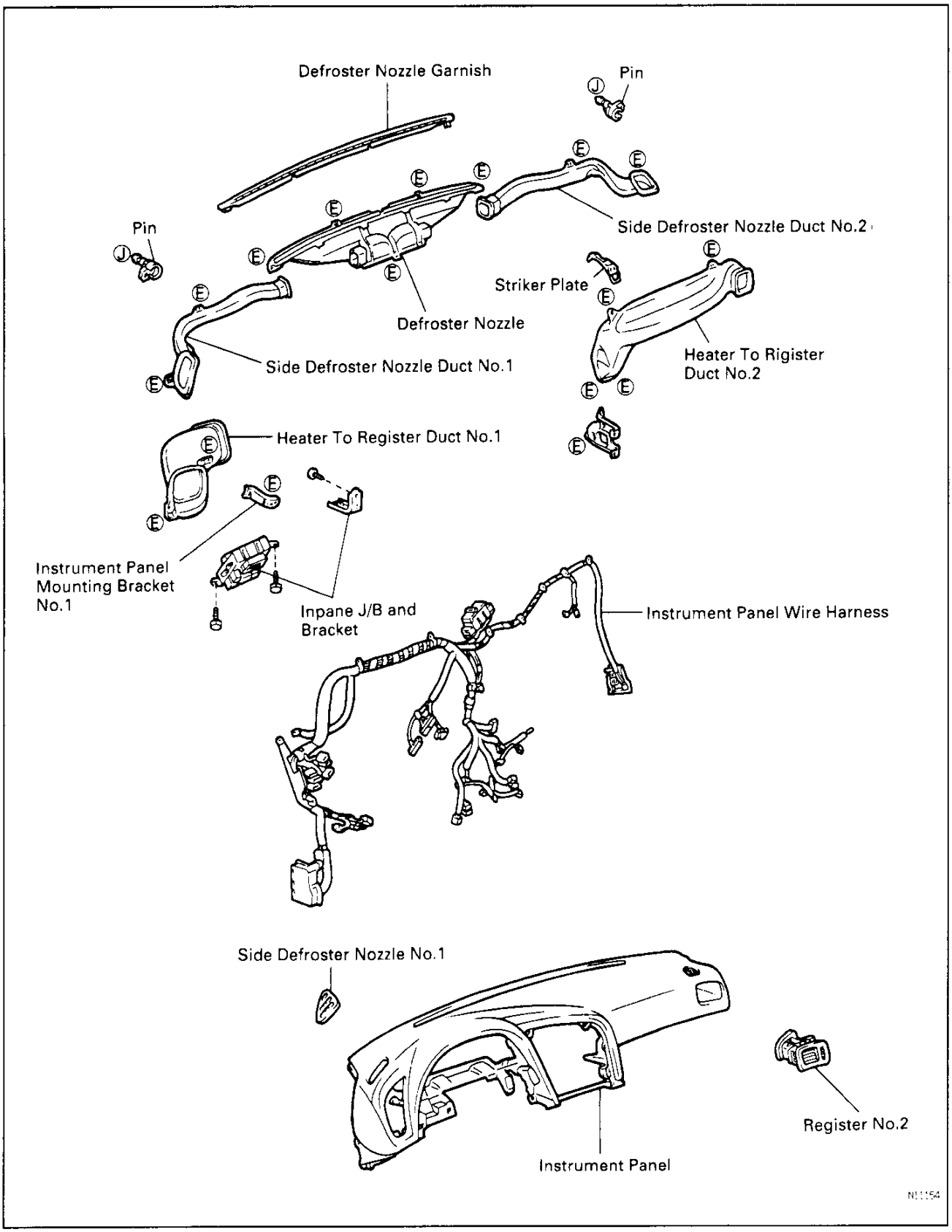

BO

Downloaded from www.Manualslib.com manuals search engine

HINT: Bolts, nuts and screws in the illustration on the previous pages are indicated using the code below for removal and installation of instrument panel.

mm (in.)

	Shape	Size		Shape	Size		Shape	Size
Ⓐ	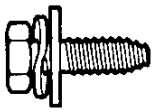	ϕ = 6 (0.24) L = 20 (0.79)	Ⓑ	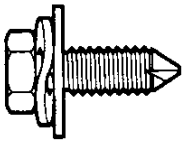	ϕ = 8 (0.31) L = 22 (0.98)	Ⓒ		ϕ = 8 (0.31)
Ⓓ		ϕ = 6 (0.24)	Ⓔ		ϕ = 5 (0.20) L = 14 (0.55)	Ⓕ		ϕ = 5.22 (0.2055) L = 16 (0.63)
Ⓖ	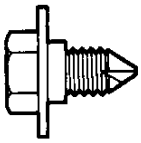	ϕ = 8 (0.31) L = 15 (0.59)	Ⓗ		ϕ = 5 (0.20) L = 14 (0.55)	Ⓘ		ϕ = 5.22 (0.2055) L = 20 (0.79)
Ⓙ		ϕ = 4.5 (0.177) L = 12						

T V05336

BO

Downloaded from www.Manualslib.com manuals search engine

BO1AY-02

INSTRUMENT PANEL REMOVAL

1. **DISCONNECT NEGATIVE (–) TERMINAL CABLE FROM BATTERY**

2. **REMOVE STEERING WHEEL**
   (See SR section)
   CAUTION:
   - **When storing the wheel pad, keep the upper surface of the pad facing upward.**
   - **Never disassemble the steering wheel pad.**

BO

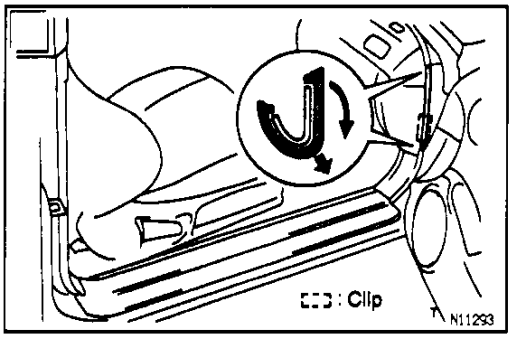

3. **REMOVE FOLLOWING PARTS:**
   HINT: Tape a screwdriver tip before use.
   (a) Front pillar lower garnish

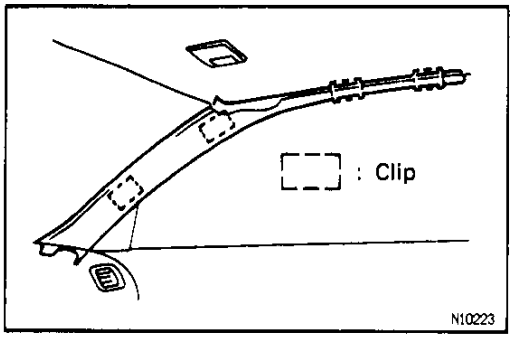

(b) Front pillar garnish

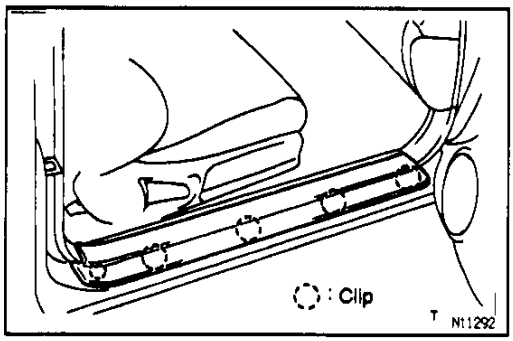

(c) Front door scuff inside plate

Downloaded from www.Manualslib.com manuals search engine

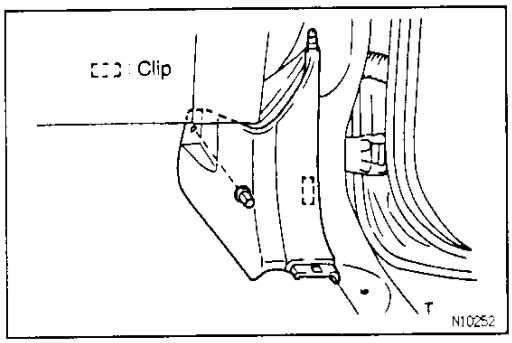

(d) Cowl side trim board
(e) Steering column cover

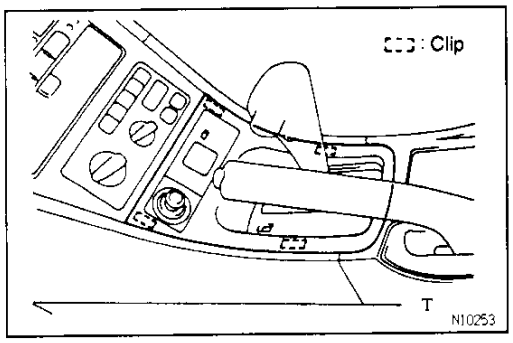

(f) Console panel upper

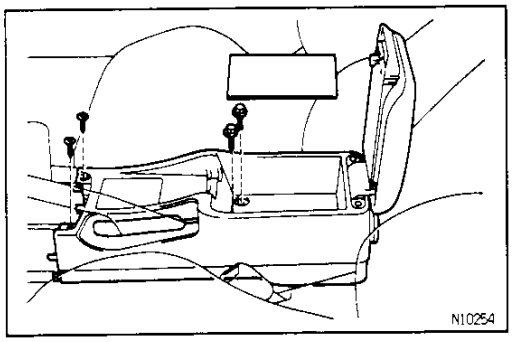

(g) Console box

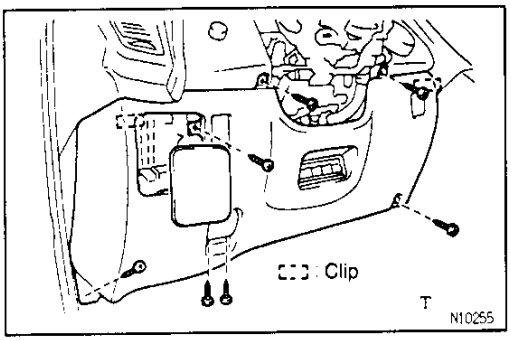

(h) Finish panel lower No.1
(i) Finish panel
(j) Heater to register duct No.2
(k) Combination switch

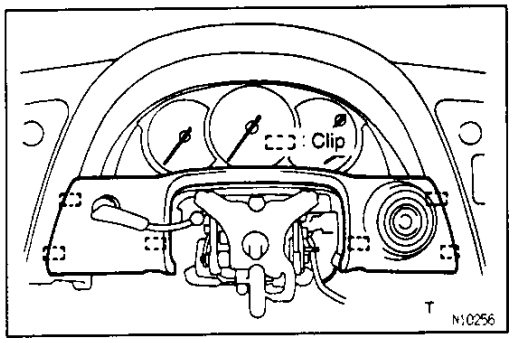

(l) Cluster finish panel lower

BO

Downloaded from www.Manualslib.com manuals search engine

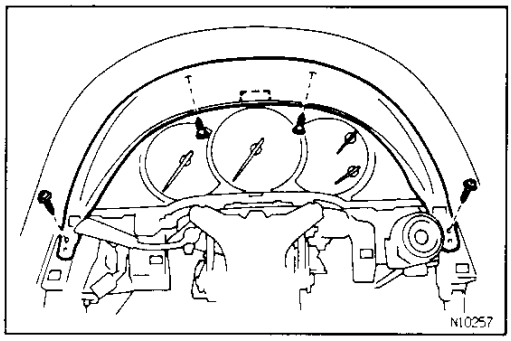

(m) Cluster finish panel

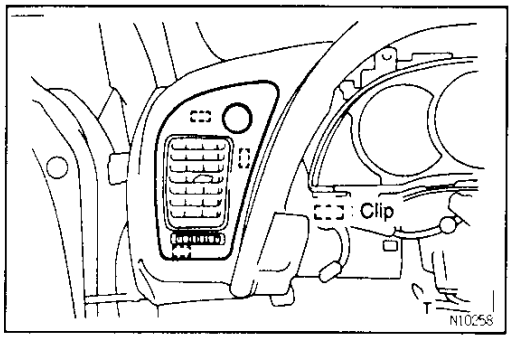

(n) Register No.1
(o) Combination meter

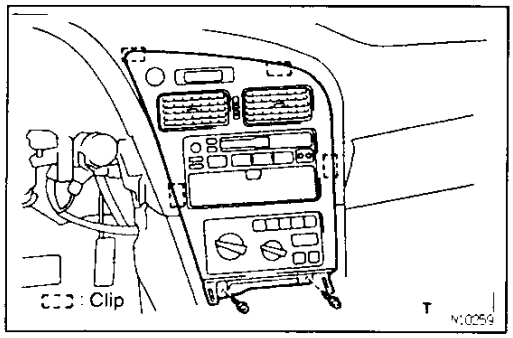

(p) Cluster finish panel center
(q) Audio receiver assembly

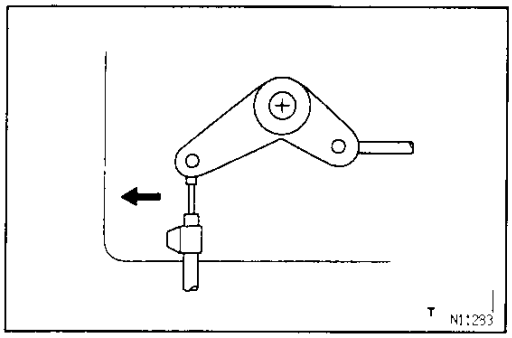

4. REMOVE A/C CONTROL ASSEMBLY

(a) Disconnect the cable to the air mix damper control.

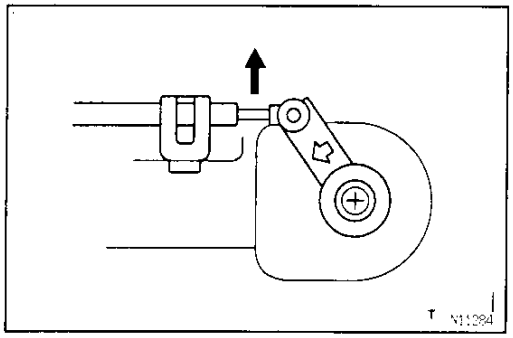

(b) Disconnect the cable to the water valve in the engine compartment.
(c) Remove 2 screws and the A/C control assembly.

Downloaded from www.Manualslib.com manuals search engine

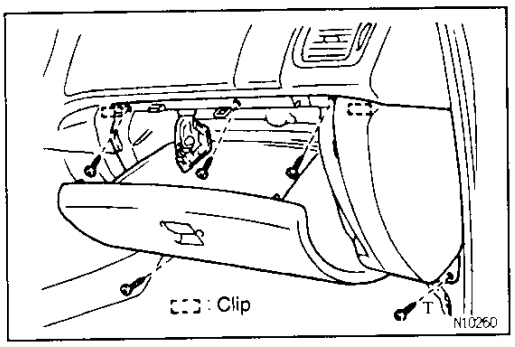

5. REMOVE INSTRUMENT PANEL BOX
(See RS section)
HINT: Tape a screwdriver tip before use.

(a) Remove the glove compartment door finish plate inside the instrument panel box.
NOTICE: When handling the airbag connector, take care not to damage the airbag wire harness.

(b) Pull up and disconnect the airbag connector.

(c) Remove the instrument panel box.

(d) Remove the lower pad insert LH and RH

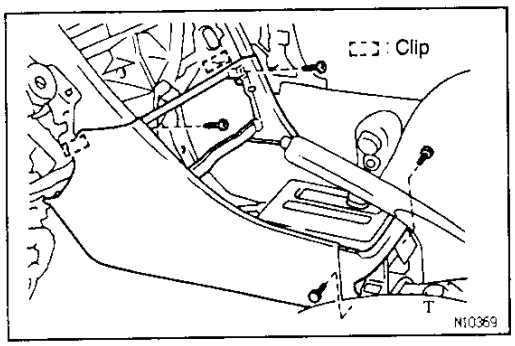

6. REMOVE FOLLOWING PARTS:

(a) Finish panel lower center

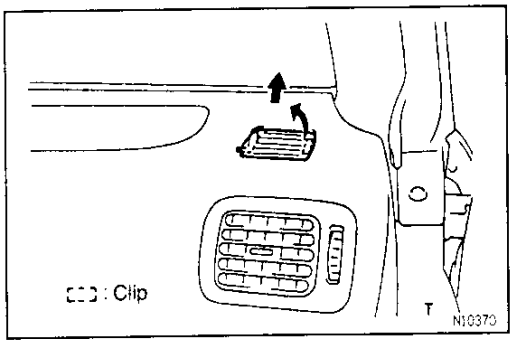

(b) Side defroster nozzle No.2

(c) Steering column (4 nuts and 1 bolt)

BO

7. REMOVE INSTRUMENT PANEL

(a) Disconnect the connectors.

(b) Remove 2 nuts, 7 bolts and the instrument panel.

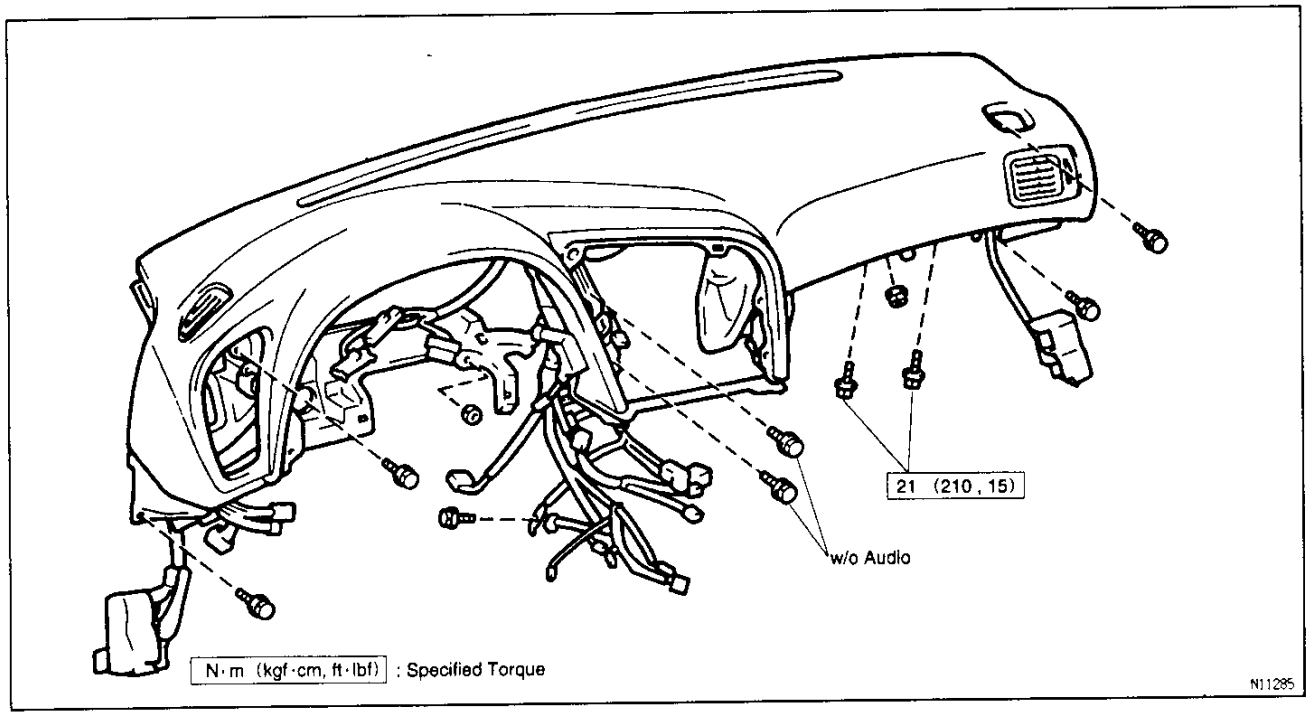

Downloaded from www.Manualslib.com manuals search engine

8. REMOVE CENTER CONSOLE BRACKET SUPPORT

(a) Remove a bolt, 2 nuts and the center console bracket No.1.

(b) Remove a bolt, a nut and the instrument panel brace No.2.

(c) Remove a brake spring, 6 bolts, 3 nuts, and the center console bracket support.

(d) Remove a bolt, 2 nuts and the cowl top inner brace.

INSTRUMENT PANEL DISASSEMBLY

BO1BC-01

1. REMOVE FOLLOWING PARTS:

(a) Defroster nozzle garnish

(b) Defroster nozzle

(c) Side defroster nozzle duct No.1 and No.2

(d) Striker plate

(e) Heater to register duct No.1

(f) Instrument panel mounting bracket No.1

(g) Inpane J/B and bracket

(h) Pin

(i) Side defroster nozzle No.1

(j) Register No.2

2. REMOVE FOLLOWING PARTS:

(a) Heater to register duct No.3

(b) Radio mounting bracket No.2

3. REMOVE INSTRUMENT PANEL WIRE HARNESS

Downloaded from www.Manualslib.com manuals search engine

INSTRUMENT PANEL ASSEMBLY

ASSEMBLE INSTRUMENT PANEL PARTS BY FOLLOWING DISASSEMBLY SEQUENCE IN REVERSE

INSTRUMENT PANEL INSTALLATION

INSTALL INSTRUMENT PANEL PARTS BY FOLLOWING REMOVAL SEQUENCE IN REVERSE

HINT: When installing the A/C control assembly, refer to page AC—xx.

TORQUE FOLLOWING BOLTS:

(a) Steering column
Torque: 25 N·m (260 kgf·cm, 19 ft·lbf)

(b) Steering wheel
Torque: 34 N·m (350 kgf·cm, 25 ft·lbf)

(c) Steering wheel pad
Torque: 9.0 N·m (92 kgf·cm, 80 in.·lbf)

Downloaded from www.Manualslib.com manuals search engine

FRONT SEAT
COMPONENTS

BO08C-06

BO

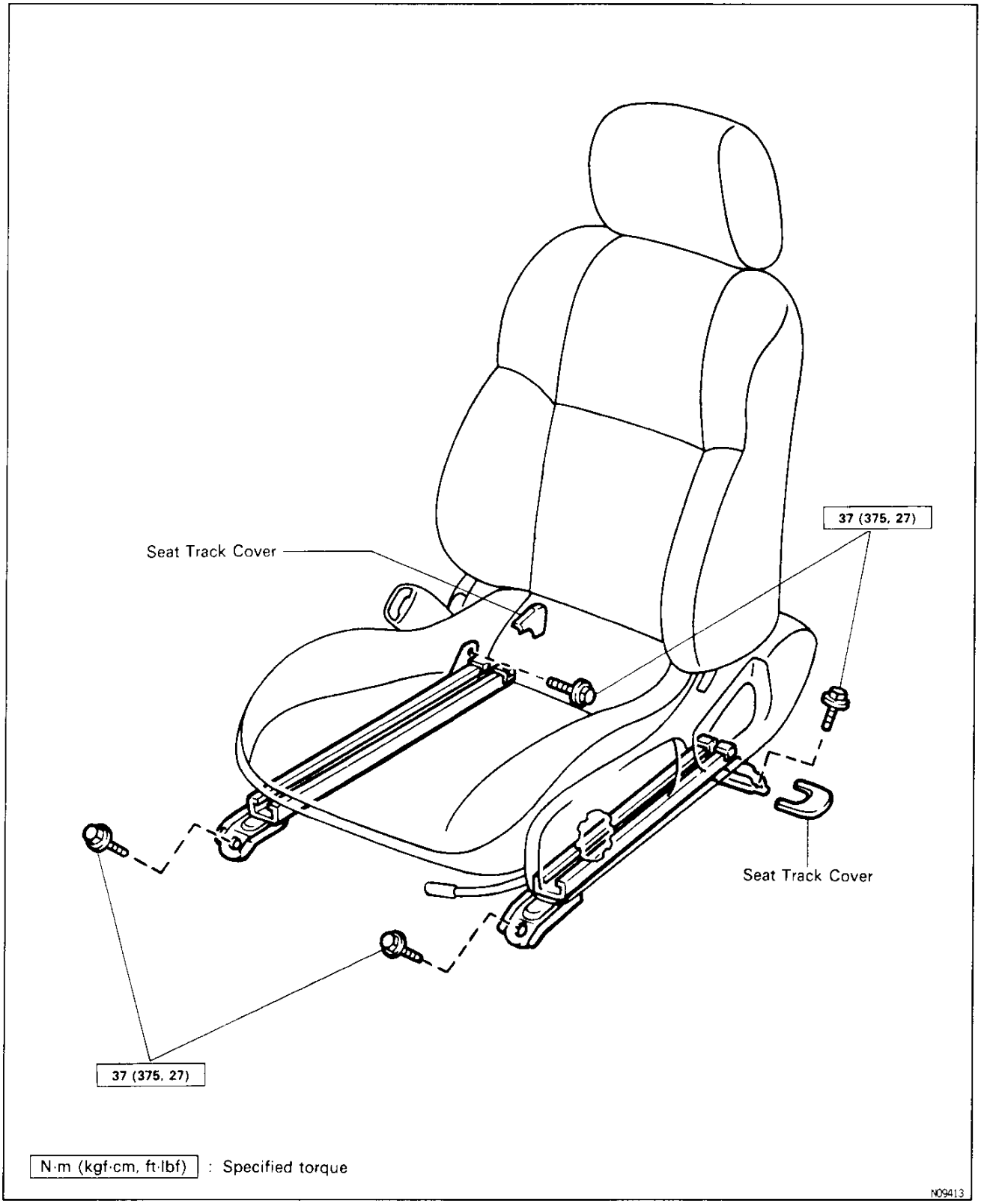

Downloaded from www.Manualslib.com manuals search engine

COMPONENTS (Cont'd)

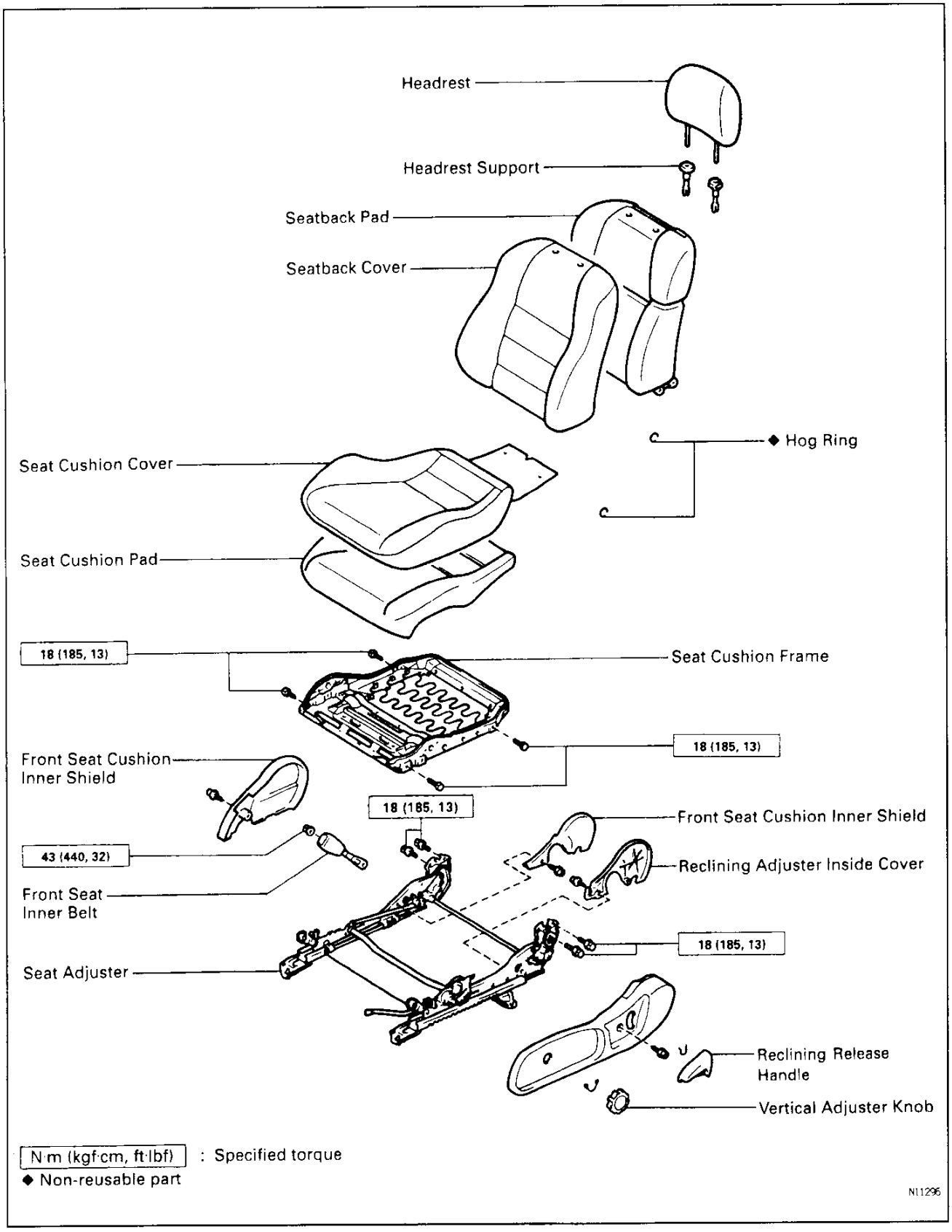

BO

Downloaded from www.Manualslib.com manuals search engine

REAR SEAT
COMPONENTS

BO180-03

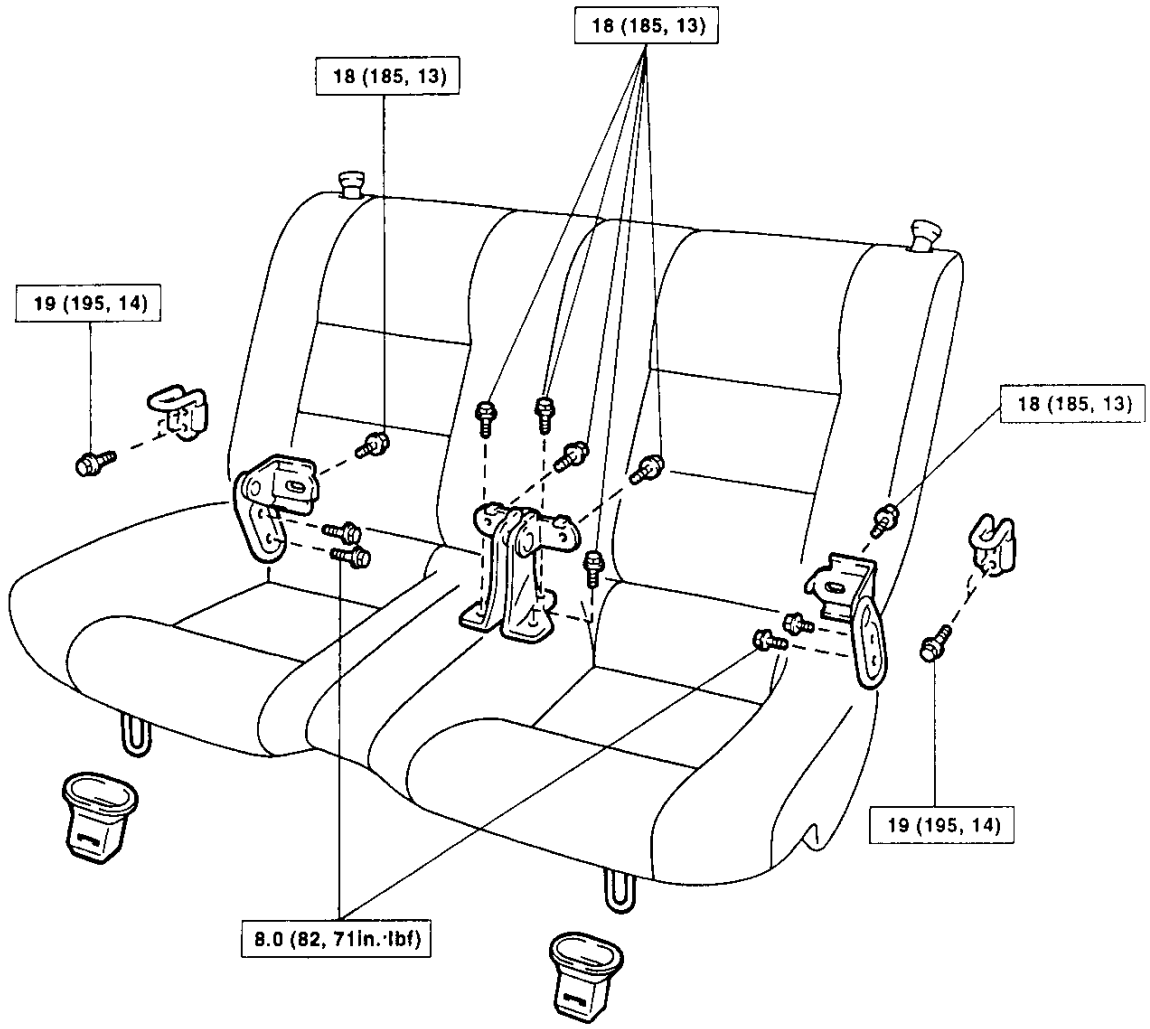

N·m (kgf·cm, ft·lbf) : Specified torque

N11299

BO

Downloaded from www.Manualslib.com manuals search engine

COMPONENTS (Cont'd)

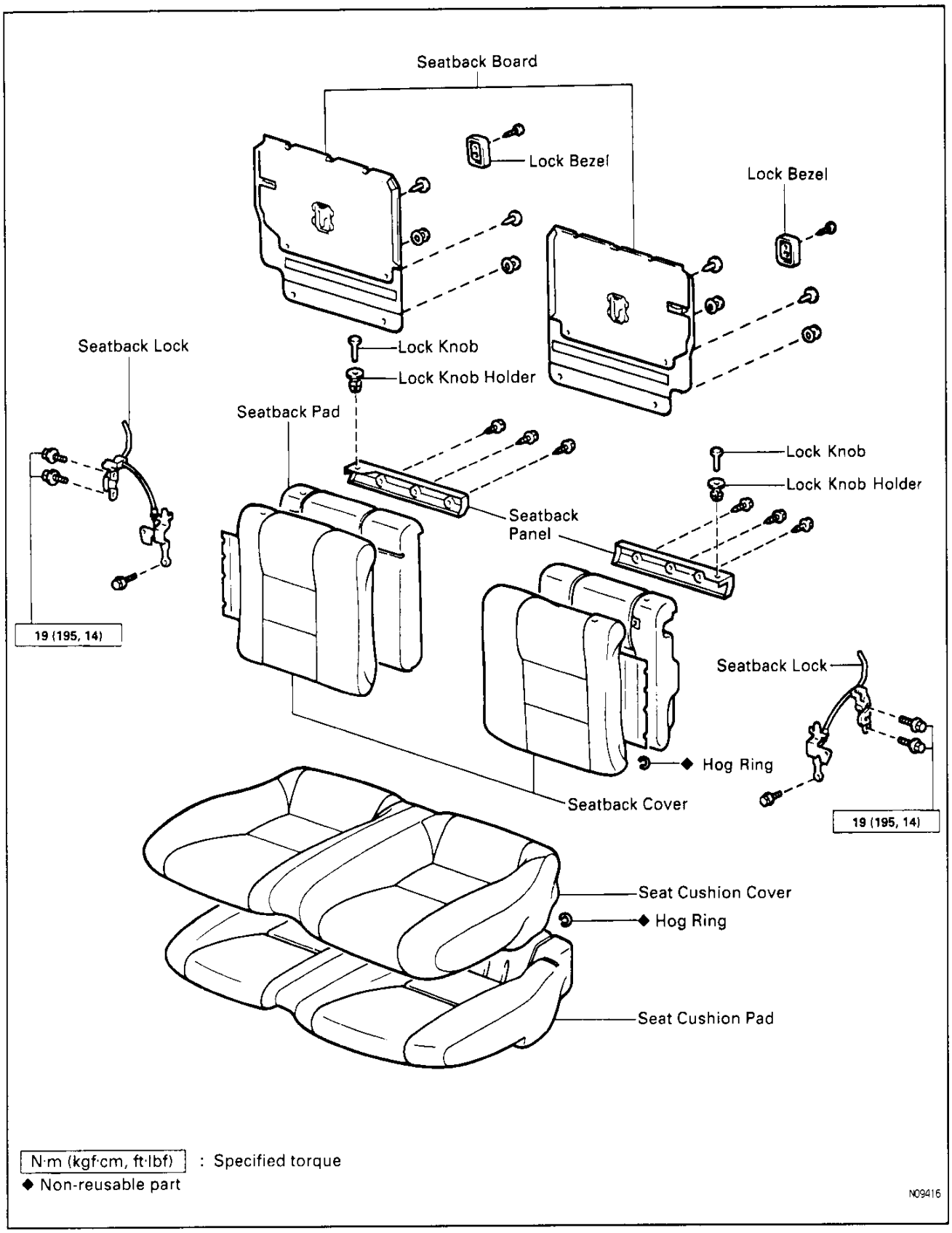

BO

Downloaded from www.Manualslib.com manuals search engine

SEAT BELT
COMPONENTS

BO181-04

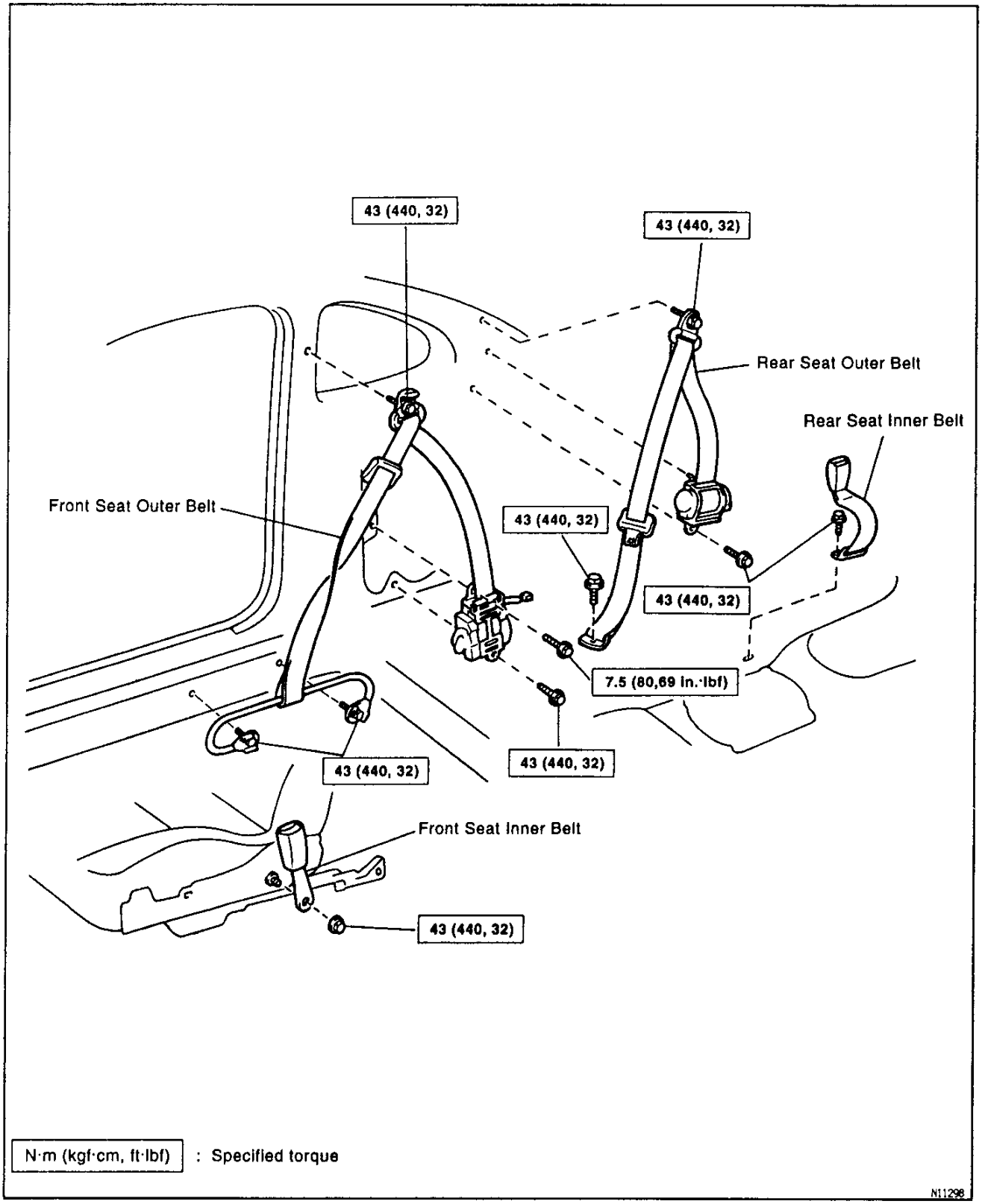

BO

Downloaded from www.Manualslib.com manuals search engine

BO187-01

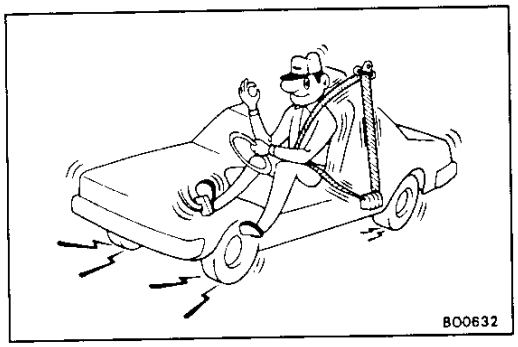

SEAT BELT INSPECTION

Emergency Locking Retractor (ELR) type

1. RUNNING TEST (IN SAFE AREA)

(a) Fasten the front seat belts.

(b) Drive the car at 10 mph (16 km/h) and make a very hard stop.

(c) Check that the belt is locked and cannot be extended at this time.

HINT: Conduct this test in a safe area. If the belt does not lock, remove the belt mechanism assembly and conduct the following static check. Also, whenever installing a new belt assembly, verify the proper operation before installation.

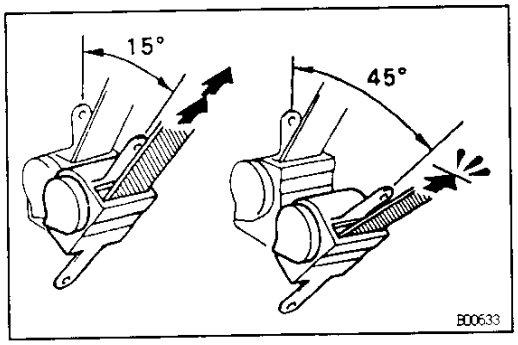

2. STATIC TEST

(a) Verify that the belt locks when pulled out quickly.

(b) Remove the locking retractor assembly.

(c) Tilt the retractor slowly.

(d) Verify that the belt can be pulled out at a tilt of 15 degrees or less, and cannot be pulled out at over 45 degrees of tilt.

If a problem is found, replace the assembly.

BO

Downloaded from www.Manualslib.com manuals search engine

ROOF HEADLINING
COMPONENTS

BO1BD-01

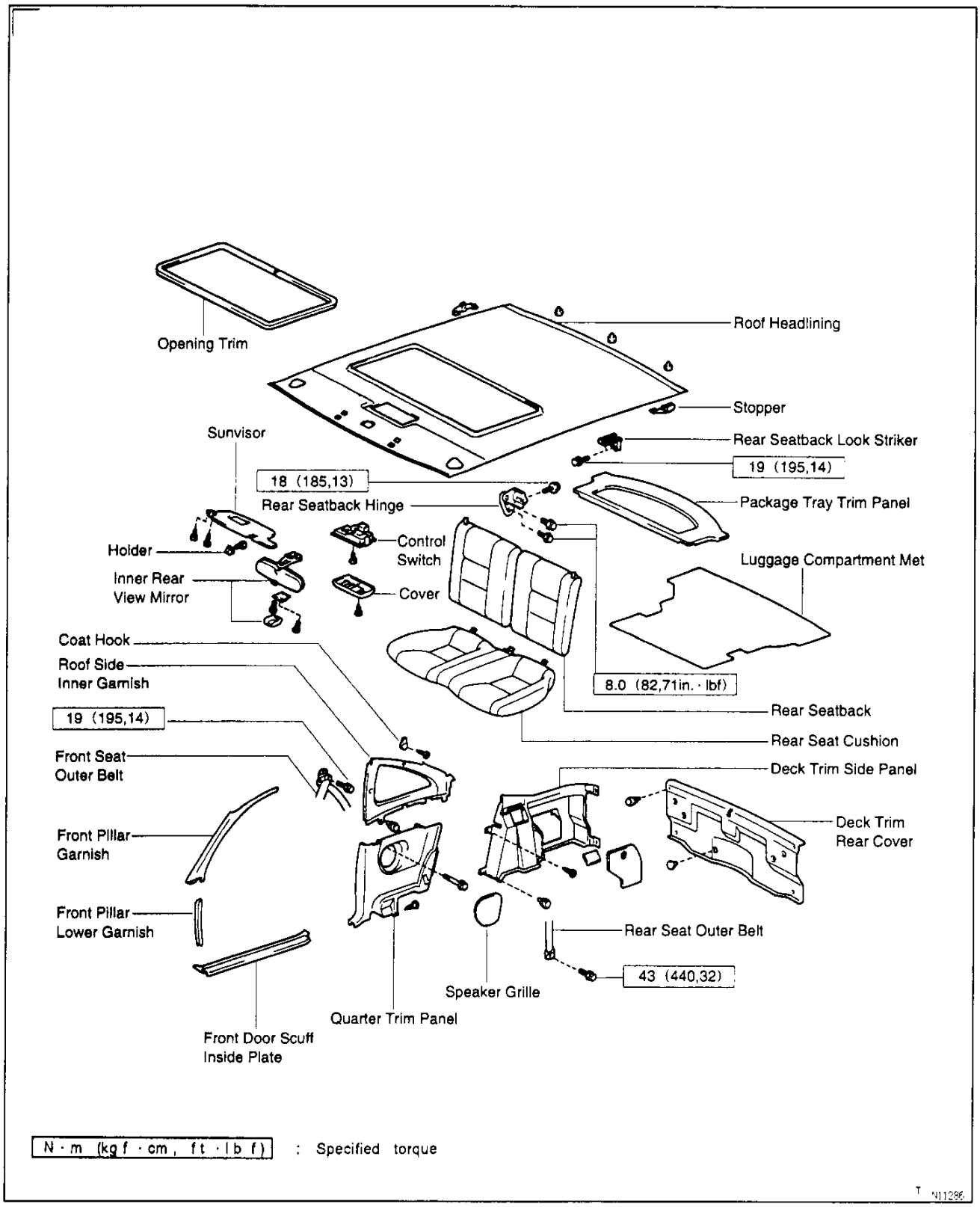

BO

Downloaded from www.Manualslib.com manuals search engine

BO1BE-01

ROOF HEADLINING REMOVAL

1. REMOVE FOLLOWING PARTS:

(a) Package tray trim panel
(b) Luggage compartment mat
(c) Rear seatback
(d) Rear seat cushion
(e) Deck trim rear cover

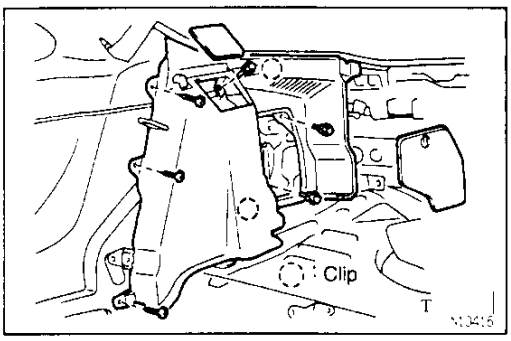

(f) Deck trim side panel

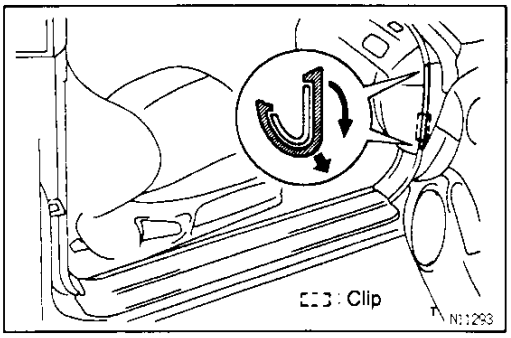

(g) Front pillar lower garnish

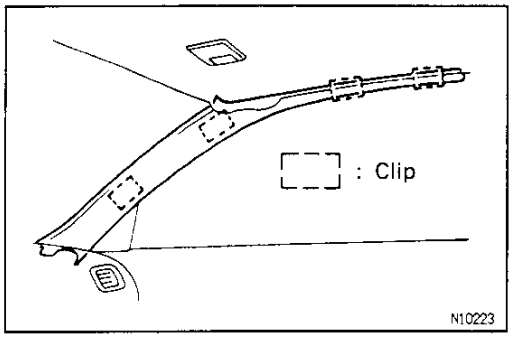

(h) Front pillar garnish

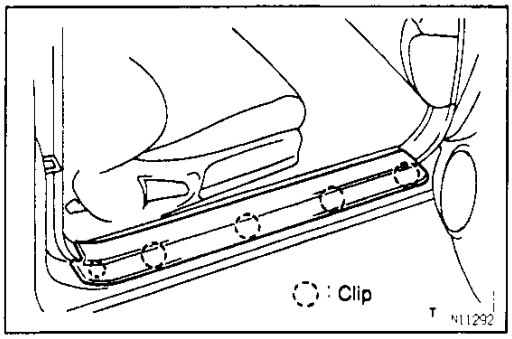

(i) Front door scuff inside plate
(j) Speaker grille
(k) Rear seatback hinge and lock striker
(l) Rear seat outer belt floor anchor

BO

Downloaded from www.Manualslib.com manuals search engine

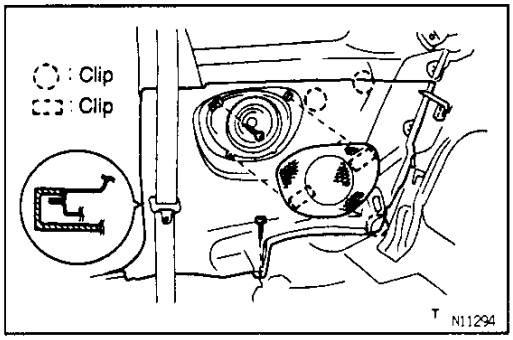

(m) Quarter trim panel
(n) Front seat outer belt shoulder anchor

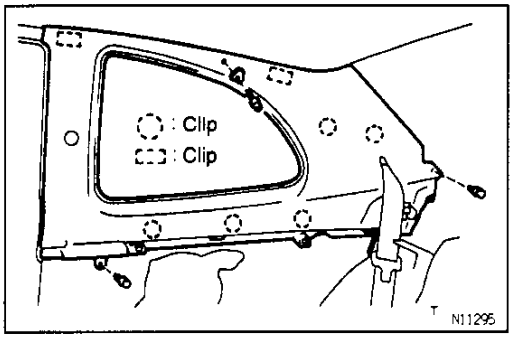

(o) Roof side inner garnish
(p) Control switch and cover
(q) Inner rear view mirror
(r) Sunvisor and holder

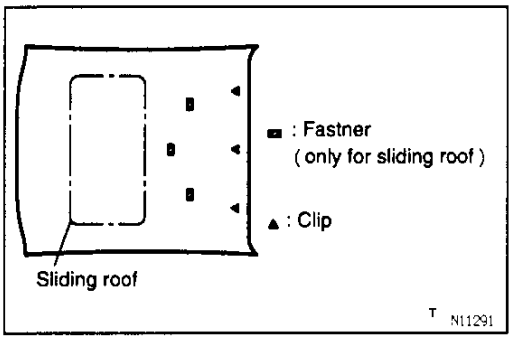

2. REMOVE ROOF HEADLINING

(a) Remove 3 clips and 2 stoppers.
(b) Remove the roof headlining.

BO

ROOF HEADLINING INSTALLATION

BO184-02

INSTALL ROOF HEADLINING PARTS BY FOLLOWING REMOVAL SEQUENCE IN REVERSE

HINT: Torque following parts:

(a) Front seat outer belt shoulder anchor bolt
Torque: 43 N·m (440 kgf·cm, 32 ft·lbf)

(b) Rear seat outer belt floor anchor bolt
Torque: 43 N·m (440 kgf·cm, 32 ft·lbf)

(c) Rear seatback lock striker x Body
Torque: 19 N·m (195 kgf·cm, 14 ft·lbf)

(d) Rear seatback hinge x Body
Torque: 8.0 N·m (82 kgf·cm, 71 in.·lbf)

(e) Rear seatback x Rear seatback hinge
Torque: 18 N·m (185 kgf·cm, 13 ft·lbf)

Downloaded from www.Manualslib.com manuals search engine

FUEL TANK AND LINE
COMPONENTS

EG0DC-0C

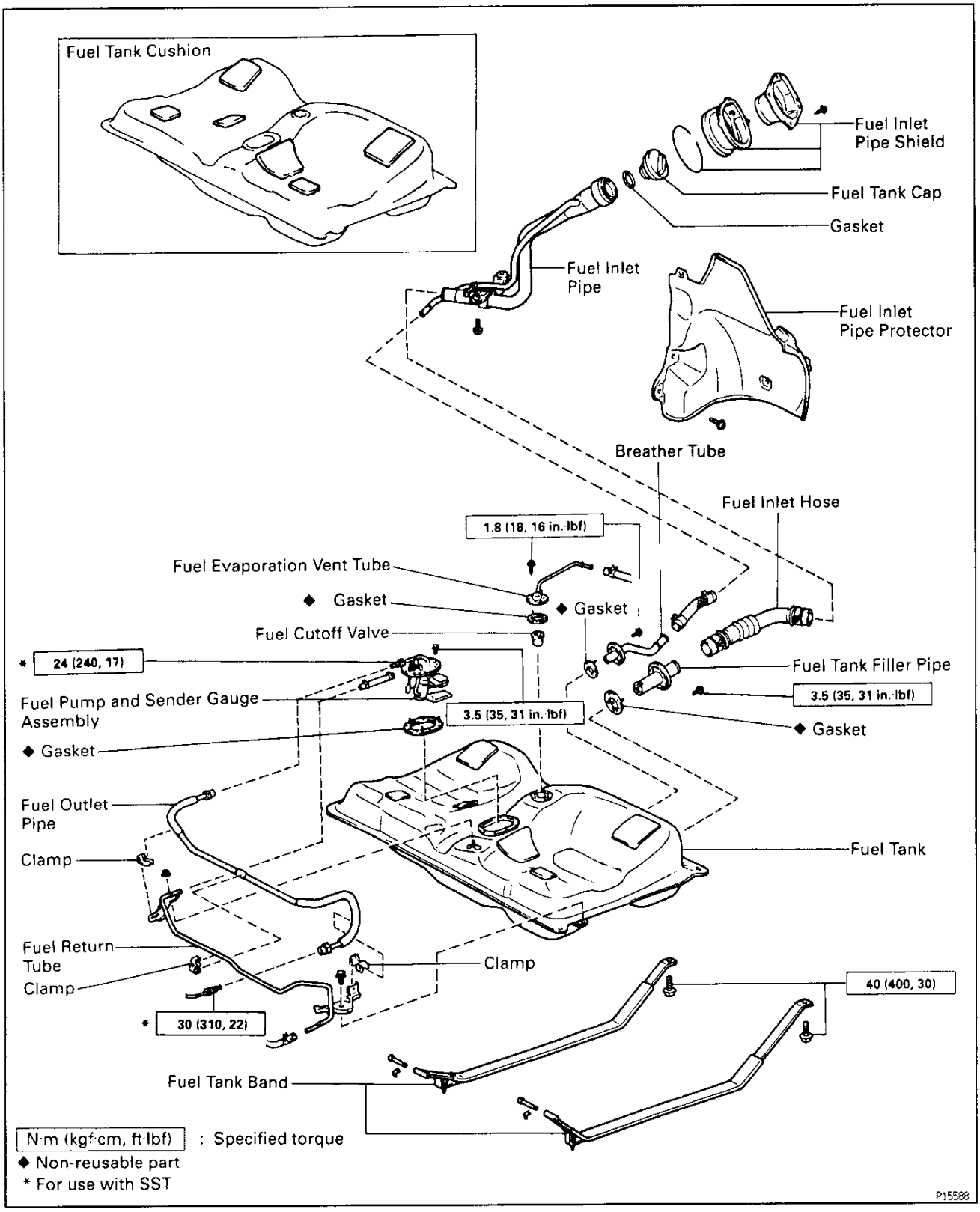

BO

Downloaded from www.Manualslib.com manuals search engine

PRECAUTIONS

EG0DD-01

1. **Always use new gaskets when replacing the fuel tank or component parts.**
2. **Apply the proper torque to all parts tightened.**

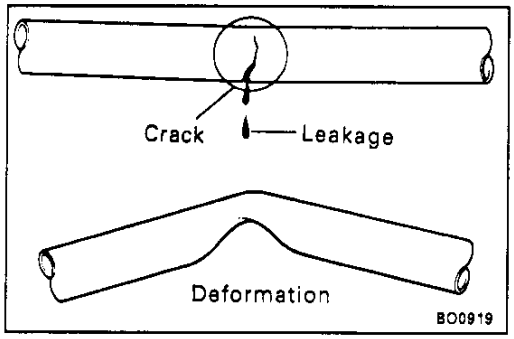

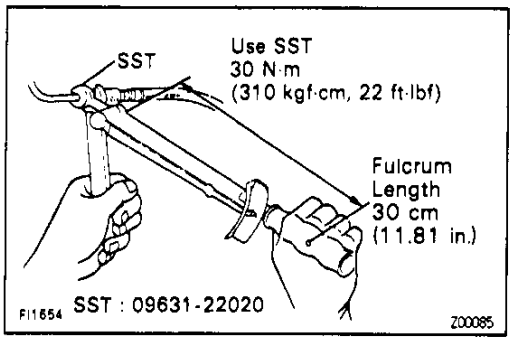

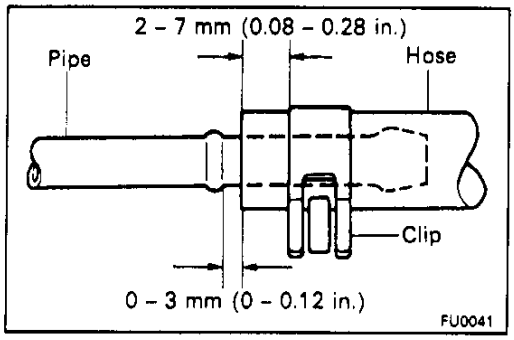

FUEL LINES AND CONNECTIONS INSPECTION

EG0DE-01

(a) Check the fuel lines for cracks or leakage, and all connections for deformation.
(b) Check the fuel tank vapor vent system hoses and connections for looseness, sharp bends or damage.
(c) Check the fuel tank for deformation, cracks, fuel leakage or tank band looseness.
(d) Check the filler neck for damage or fuel leakage.
(e) Hose and tube connections are as shown in the illustration.
If a problem is found, repair or replace the part as necessary.

BO

Downloaded from www.Manualslib.com manuals search engine

SERVICE SPECIFICATIONS

TORQUE SPECIFICATIONS

BO09F-00

Part tightened	N·m	kgf·cm	ft·lbf
FRONT BUMPER	–	–	–
Reinforcement x Body	13	130	9.4
Front bumper cover x Body	5.4	55	48in.·lbf
REAR BUMPER	–	–	–
Reinforcement x Body	95	970	70
Rear bumper cover x Body	5.4	55	48in.·lbf
HOOD	–	–	–
Hood hinge x Hood	13	130	9.4
Hood lock x Body	7.8	80	69 in.·lbf
FRONT DOOR	–	–	–
Door hinge x Body	28	290	21
Door hinge x Door panel	28	290	21
Door check x Body	32	330	24
Door check x Door panel	5.9	60	52in.·lbf
Door lock striker x Body	26	260	19
Door lock x Door panel	5.4	55	48 in.·lbf
Door glass x Window regulator	7.8	80	69in.·lbf
Window regulator x Door panel	5.9	60	52 in.·lbf
Window guide lower plate x Door panel	7.8	80	69 in.·lbf
Door window upper stop x Door panel	5.4	55	48in.·lbf
Mirror bracket x Door panel	7.8	80	69in.·lbf
BACK DOOR	–	–	–
Back door hinge x Body	21	210	15
Back door hinge x Back door	14	145	11
Door lock x Body	19	195	14
Door lock striker x Back door	19	195	14
Back door damper stay x Body	8.8	90	78in.·lbf
Back door damper stay x Back door	8.8	90	78in.·lbf
WIPER AND WASHER	–	–	–
Front Wiper	–	–	–
Wiper arm x Wiper link	21	205	15
Rear Wiper	–	–	–
Wiper arm x Wiper motor	5.4	55	48in.·lbf
SLIDING ROOF	–	–	–
Drive gear x Body	5.4	55	48in.·lbf

Downloaded from www.Manualslib.com manuals search engine

TORQUE SPECIFICATIONS (Cont'd)

Part tightened	N·m	kgf·cm	ft·lbf
INSTRUMENT PANEL	–	–	–
Steering column x Center console bracket support	25	260	19
Steering wheel x Steering column	34	350	25
Steering wheel pad x Steering wheel	8.8	90	78in.·lbf
FRONT SEAT	–	–	–
Seat adjuster x Body	37	375	27
Seat adjuster x Seatback	18	185	13
Seat adjuster x Seat cushion	18	185	13
REAR SEAT	–	–	–
Seatback hinge LH and RH x Body	8.0	82	71in.·lbf
Seatback hinge center x Body	18	185	13
Seatback x Seatback hinge	18	185	13
Seatback lock striker x Body	19	195	14
Seatback lock x Seatback	19	195	14
SEAT BELT	–	–	–
Front Seat Belt	–	–	–
Outer belt shoulder anchor x Body	43	440	32
Outer belt floor anchor x Body	43	440	32
Retractor x Body (Upper Side)	7.5	80	69 in.·lbf
Retractor x Body (Lower Side)	43	440	32
Inner belt x Seat	43	440	32
Rear Seat Belt	–	–	–
Outer belt shoulder anchor x Body	43	440	32
Outer belt floor anchor x Body	43	440	32
Retractor x Body	43	440	32
Inner belt x Body	43	440	32
FUEL TANK AND LINK	–	–	–
Fuel tank band x Body	40	400	30
Fuel outlet pipe x Fuel pump and sender gauge assembly	24	240	17

Downloaded from www.Manualslib.com manuals search engine

AIR CONDITIONING SYSTEM

GENERAL DESCRIPTION ..... AC– 2
DESCRIPTION ..... AC– 8
PREPARATION ..... AC– 13
USE OF MANIFOLD GAUGE SET ..... AC– 15
TROUBLESHOOTING ..... AC– 18
REFRIGERANT VOLUME ..... AC– 25
DRIVE BELT TENSION ..... AC– 26
IDLE–UP SPEED ..... AC– 27
REFRIGERANT LINES ..... AC– 28
COOLING UNIT ..... AC– 31
HEATER UNIT ..... AC– 34
BLOWER UNIT ..... AC– 38
COMPRESSOR ..... AC– 41
RECEIVER ..... AC– 58
CONDENSER ..... AC– 60
EVAPORATOR ..... AC– 62
HEATER RADIATOR ..... AC– 62
WATER VALVE ..... AC– 63
EXPANSION VALVE ..... AC– 64
VACUUM SWITCHING VALVE (VSV) ..... AC– 65
BLOWER MOTOR ..... AC– 67
ELECTRIC COOLING FAN ..... AC– 68
AIR INLET CONTROL SERVOMOTOR ..... AC– 70
AIR OUTLET CONTROL SERVOMOTOR ..... AC– 71
BLOWER RESISTOR ..... AC– 73
PRESSURE SWITCH ..... AC– 74
EVAPORATOR TEMPERATURE SENSOR ..... AC– 76
REVOLUTION DETECTING SENSOR ..... AC– 77
RELAY ..... AC– 78
AIR CONDITIONER AMPLIFIER ..... AC– 80
AIR CONDITIONER CONTROL ASSEMBLY ..... AC– 82
SERVICE SPECIFICATIONS ..... AC– 89

Downloaded from www.Manualslib.com manuals search engine

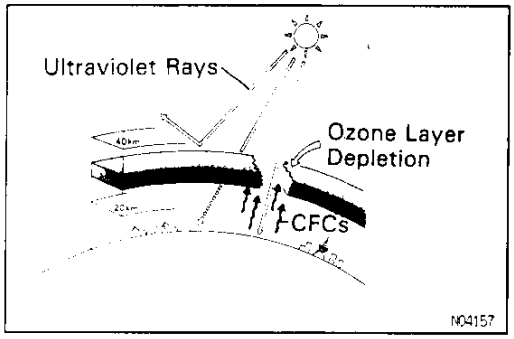

GENERAL DESCRIPTION

NEW AIR CONDITIONING SYSTEM WITH HFC134a

ACON0-08

Refrigerant CFC 12 (R 12), previously used in automobiles' air conditioning systems is believed to contribute towards the depletion the earth's ozone layer. The ozone layer help to protect us against the harmful ultraviolet rays of the sun.

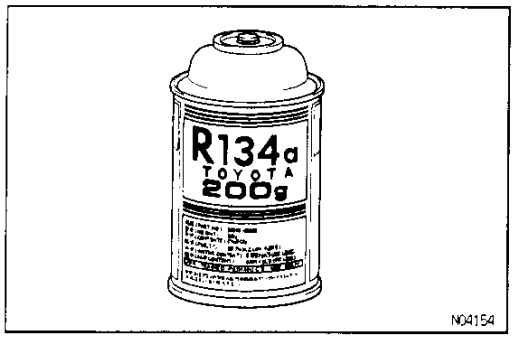

A newly developed refrigerant, HFC 134 a (R 134 a), does not the destroy the ozone layer.

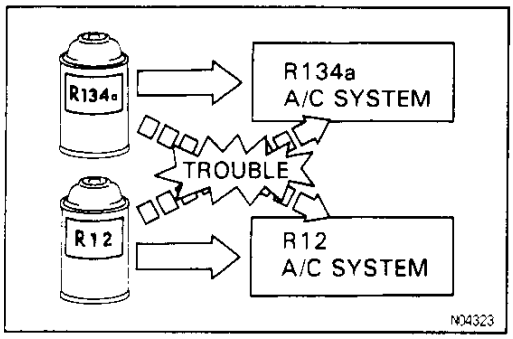

PRECAUTIONS FOR SERVICING HFC134a AIR CONDITIONINGS

ACON1-08

1. **USE OF NEW REFRIGERANT HFC134a**
   The very different characteristics of refrigerants HFC134a and CFC12 have determined the design of their respective air conditioning systems. Under no circumstances allow CFC12 to enter an HFC134a system, or vice versa, because serious damage could occur.
2. **USE OF PROPER COMPRESSOR OIL**
   Compressor oil used in conventional CFC12 air conditioning systems cannot be used in HFC134a air conditioning systems.
   Always use genuine Toyota HFC134a air conditioning oil ND–OIL 8, made expressly for use with HFC134a.

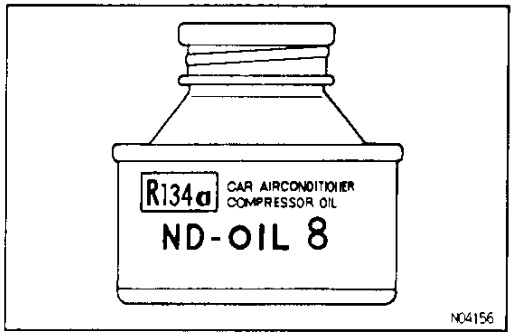

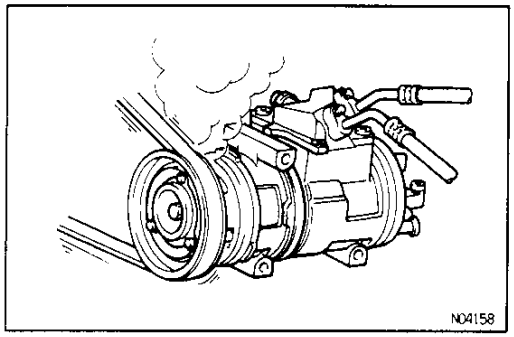

If even a small amount of the wrong oil is changed, it will result in clouding of the refrigerant.
A large amount will cause the compressor to seize up.

Downloaded from www.Manualslib.com manuals search engine

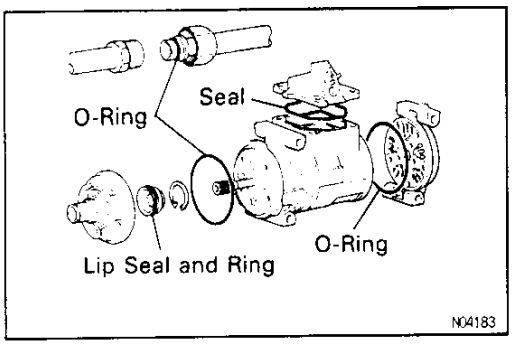

3. USE OF PROPER O–RINGS AND SEALS

O–rings and seals used for conventional CFC12 air conditioning systems cannot be used for HFC134a air conditioning systems.

Always use genuine Toyota HFC134a system O–rings and seals for HFC134a air conditioning systems.

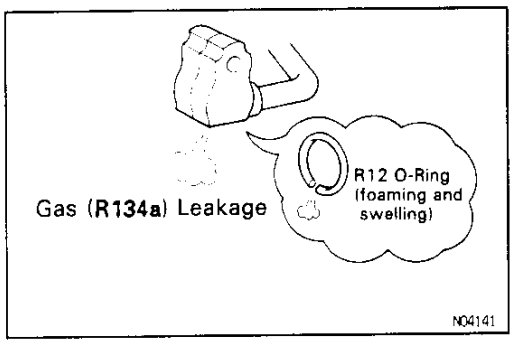

If O–rings and/or seals for CFC12 air conditioning systems are used by mistake in the connections of an HFC134a air conditioning system, the O–ring and seals will foam and swell resulting in leakage of refrigerant.

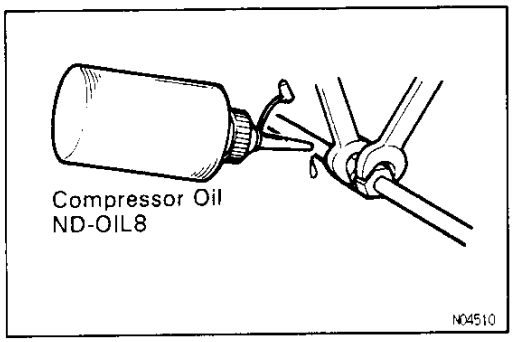

4. TIGHTEN CONNECTING PARTS SECURELY

Securely tighten the connecting parts to prevent leaking of refrigerant gas.

- Apply a few drops of compressor oil to O–ring fittings for easy tightening and to prevent leaking of refrigerant gas.

CAUTION: Apply only ND–OIL 8 compressor oil.

- Tighten the nuts using 2 wrenches to avoid twisting the tube.
- Tighten the O–ring fittings or the bolted type fittings to the specified torque.

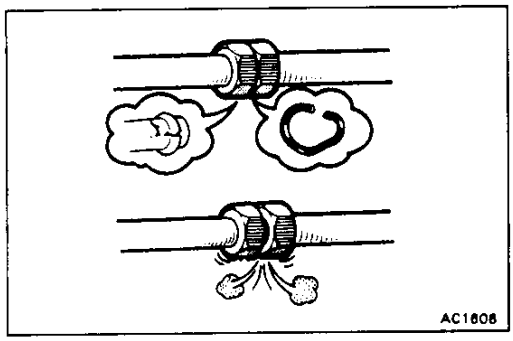

5. INSERT PLUG IMMEDIATELY IN DISCONNECTED PARTS

Insert a plug immediately in the disconnected parts to prevent the ingress of moisture and dust.

6. DO NOT REMOVE PLUG FROM NEW PARTS UNTIL IMMEDIATELY BEFORE INSTALLATION

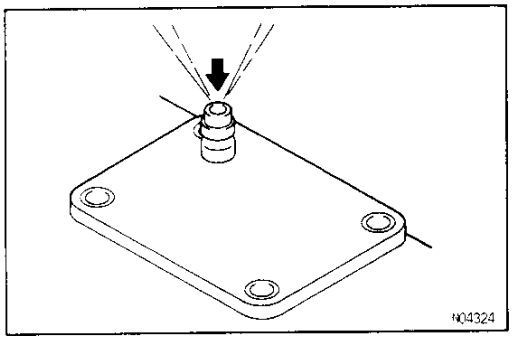

7. DISCHARGE GAS IN NEW COMPRESSOR FROM CHARGING VALVE BEFORE INSTALLING IT

If the gas in the new compressor is not discharged first, compressor oil will spray out with gas when the plug is removed.

AC

Downloaded from www.Manualslib.com manuals search engine

AC0N2-0J

SERVICE TOOLS FOR HFC134a AIR CONDITIONING

When servicing HFC134a air conditioning systems always use the HFC134a dedicated manifold gauges, gas leak detector and vacuum pump adaptor.

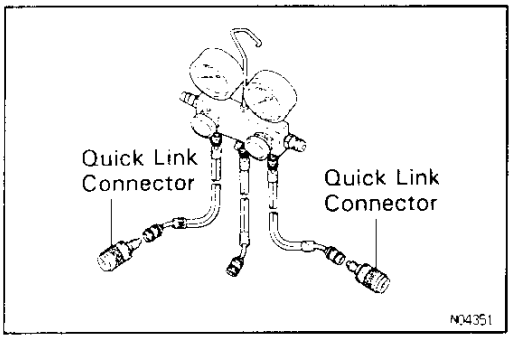

1. USE MANIFOLD GAUGES FOR HFC134a AIR CONDITIONING

Always use HFC134a dedicated manifold gauges to prevent CFC 12 and CFC 12 compressor oil contaminating the HFC134a system.

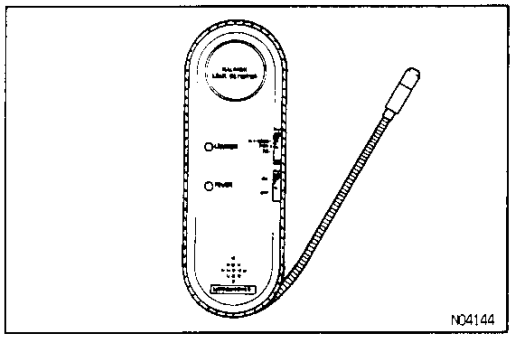

2. USE HFC134a GAS LEAK DETECTOR

Similarly, always use an HFC 134 a dedicated leak detect or. The CFC12 leak detector is not sufficiently sensitive.

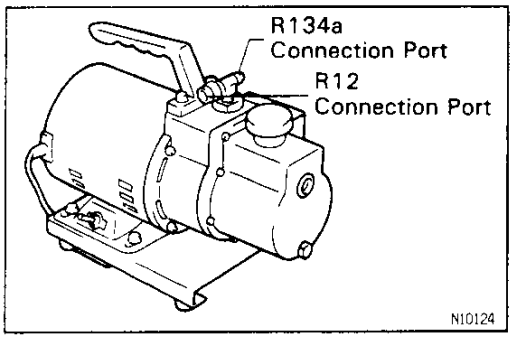

3. USE VACUUM PUMP

The vaccume pump has 2 connection ports, one for CFC12 and one for HFC134a.

CAUTION:

Be sure to close off the macifold gauge valve immediately after evacuating the system. Then you may switch off the vacuum pump. If this order is reversed, the line will be temporarily open to atmosphere.

AC

Downloaded from www.Manualslib.com manuals search engine

ACON3-07

HANDLING PRECAUTIONS FOR REFRIGERANT

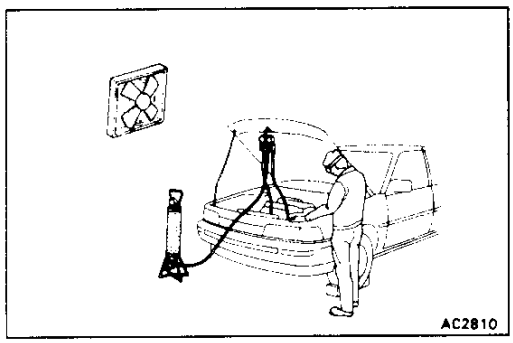

1. **DO NOT HANDLE REFRIGERANT IN AN ENCLOSED AREA OR NEAR AN OPEN FLAME**
2. **ALWAYS WEAR EYE PROTECTION**

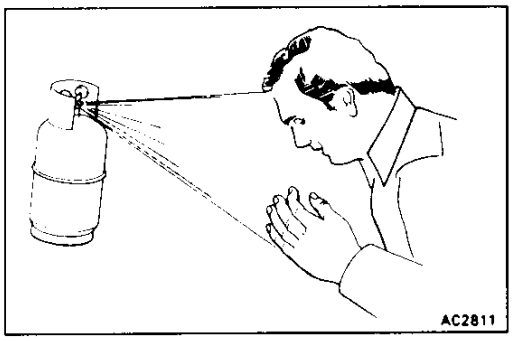

3. **BE CAREFUL THAT LIQUID REFRIGERANT DOES NOT GET IN YOUR EYES OR ON YOUR SKIN**
   If liquid refrigerant gets in your eyes or on your skin:
   (a) Wash the area with lots of cool water.
   CAUTION: Do not rub your eyes or skin.
   (b) Apply clean petroleum jelly to the skin.
   (c) Go immediately to a physician or hospital for professional treatment.

ACON4-03

HANDLING PRECAUTIONS FOR REFRIGERANT CONTAINER

1. **NEVER HEAT CONTAINER OR EXPOSE IT TO NAKED FLAME**
2. **BE CAREFUL NOT TO DROP CONTAINER AND NOT TO APPLY PHYSICAL SHOCKS TO IT**

AC

ACON5-07

CHARGING AND LEAK—CHECK METHODS

Evacuate the refrigeration system according to the following procedures.

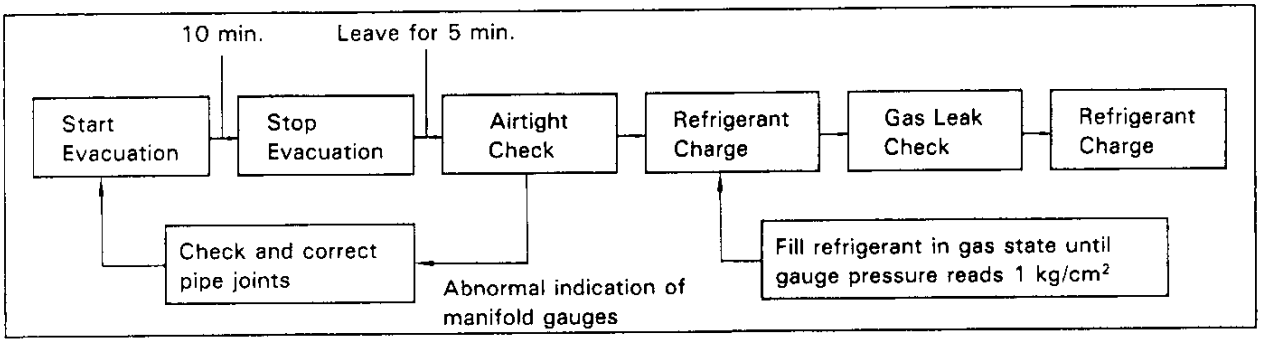

V00970

Downloaded from www.Manualslib.com manuals search engine

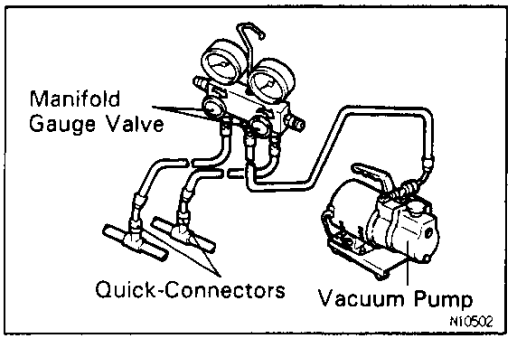

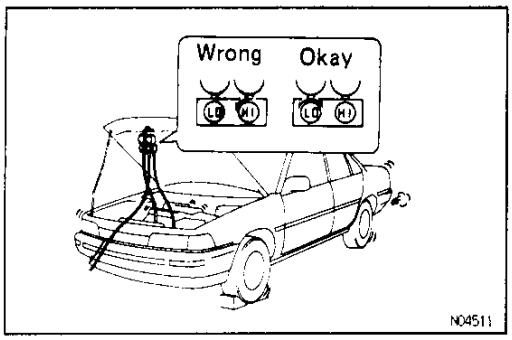

CAUTION:

- **Be sure to connect both the high and low pressure quick—connectors onto the A/C system when evacuating. If only one side is connected, the system would be open to atmosphere through the other connector, making it impossible to maintain vacuum.**
- **Be sure to turn off the manifold gauge valve immediately after evacuating the system. Then you may switch off the vacuum pump.**

ACON6-03

PRECAUTIONS WHEN CHARGING REFRIGERANT

1. **DO NOT OPERATE COMPRESSOR WITHOUT ENOUGH REFRIGERANT IN REFRIGERANT SYSTEM**
   If there is not enough refrigerant in the refrigerant system, oil lubrication will be insufficient and compressor burnout may occur, so take care to avoid this.
2. **DO NOT OPEN HIGH PRESSURE MANIFOLD VALVE WHILST COMPRESSOR IS OPERATING**
   If the high pressure valve is opened, refrigerant flows in the reverse direction and could cause the charging cylinder to rupture, so open and close the low pressure valve only.
3. **BE CAREFUL NOT TO OVERCHARGE SYSTEM WITH REFRIGERANT**
   If refrigerant is overcharged, it causes problems such as insufficient cooling, poor fuel economy, engine overheating etc.

AC

ACON7-03

ELECTRICAL PARTS

Before removing and inspecting the electrical parts, set the ignition switch to the LOCK position and disconnect the negative (—) terminal cable from battery.

CAUTION: Work must be started after 90 seconds from the time the ignition switch is turned to the "LOCK" position and the negative (—) terminal cable is disconnected from the battery.

Downloaded from www.Manualslib.com manuals search engine

SRS AIRBAG

Failure to carry out service operations in the correct sequence could cause the airbag system to deploy, possibly leading to a serious accident.
If during removal or installation of the parts and the yellow wire harness and connector for the airbag is necessary, refer to the precautionary notices in the RS section before performing the operation.
CAUTION: Work must be started after 90 seconds from the time the ignition switch is turned to the "LOCK" position and the negative (−) terminal cable is disconnected from the battery.

Downloaded from www.Manualslib.com manuals search engine

DESCRIPTION
PARTS LOCATION

AC10F-01

LHD Models

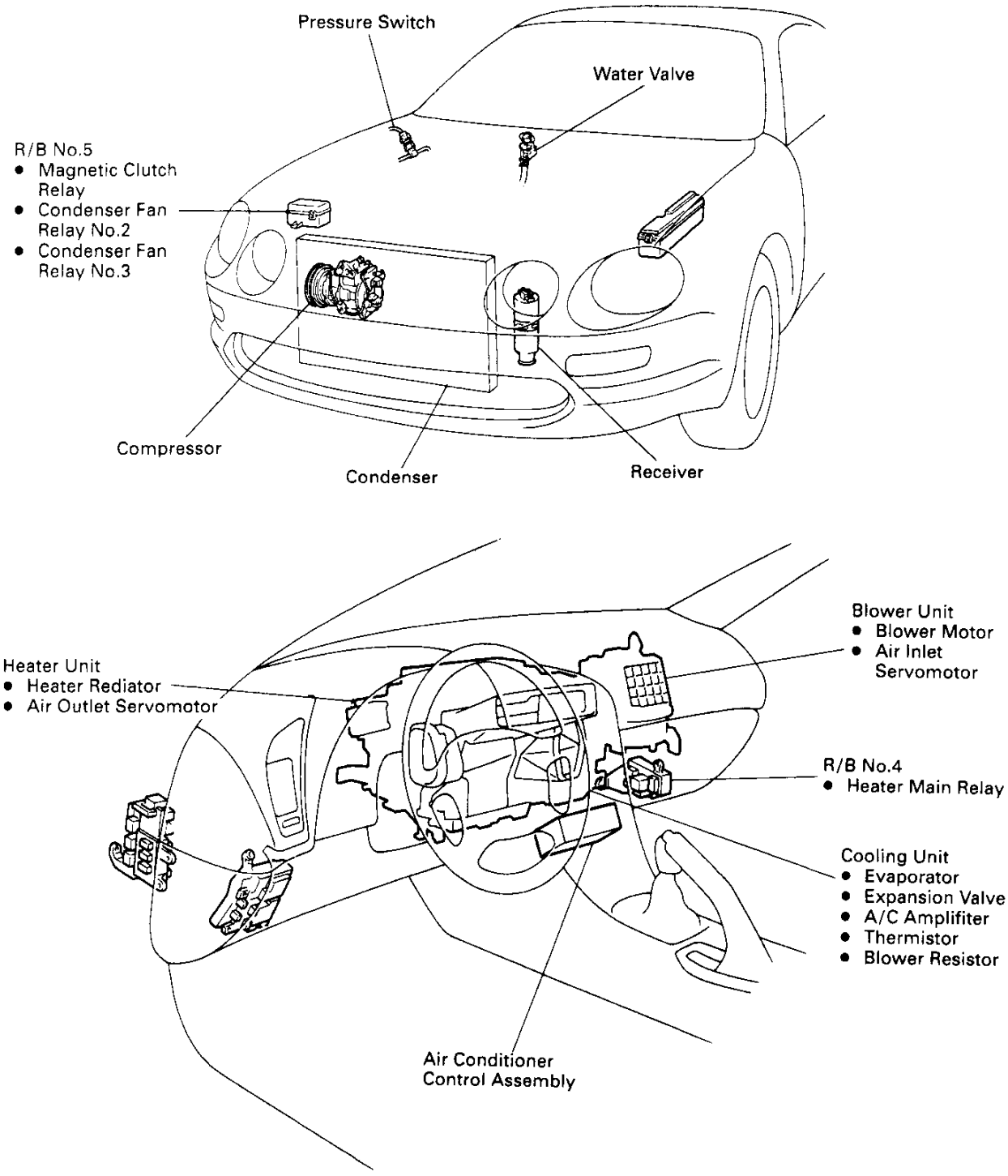

N10406
N10458

Z12058

AC

Downloaded from www.Manualslib.com manuals search engine

RHD Models

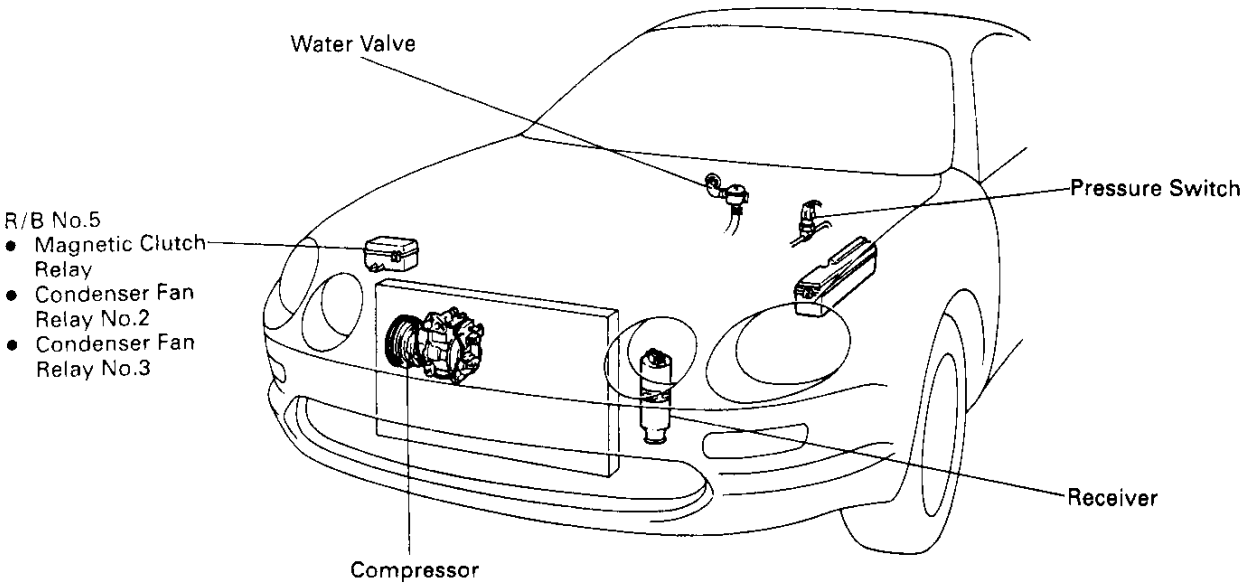

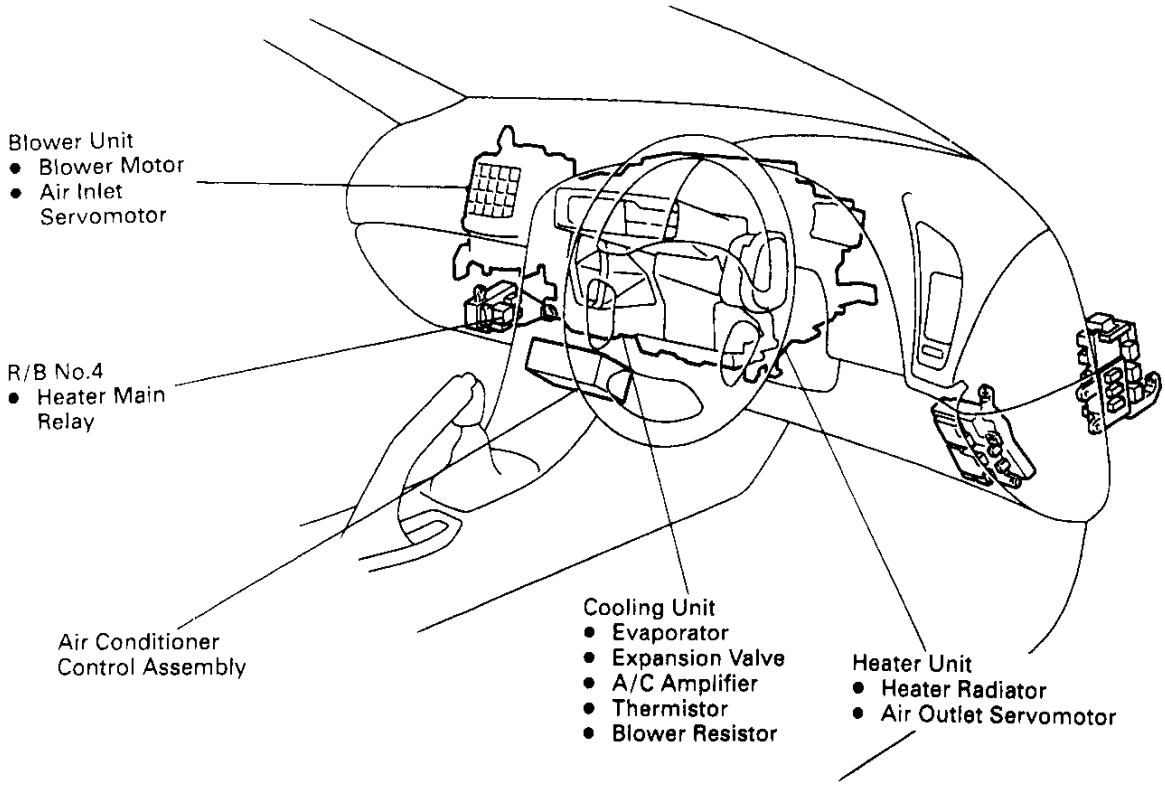

N10969
N10829

Z12059

Downloaded from www.Manualslib.com manuals search engine

AC16M-02

ELECTRICAL WIRING DIAGRAM

7A–FE Engine Models:

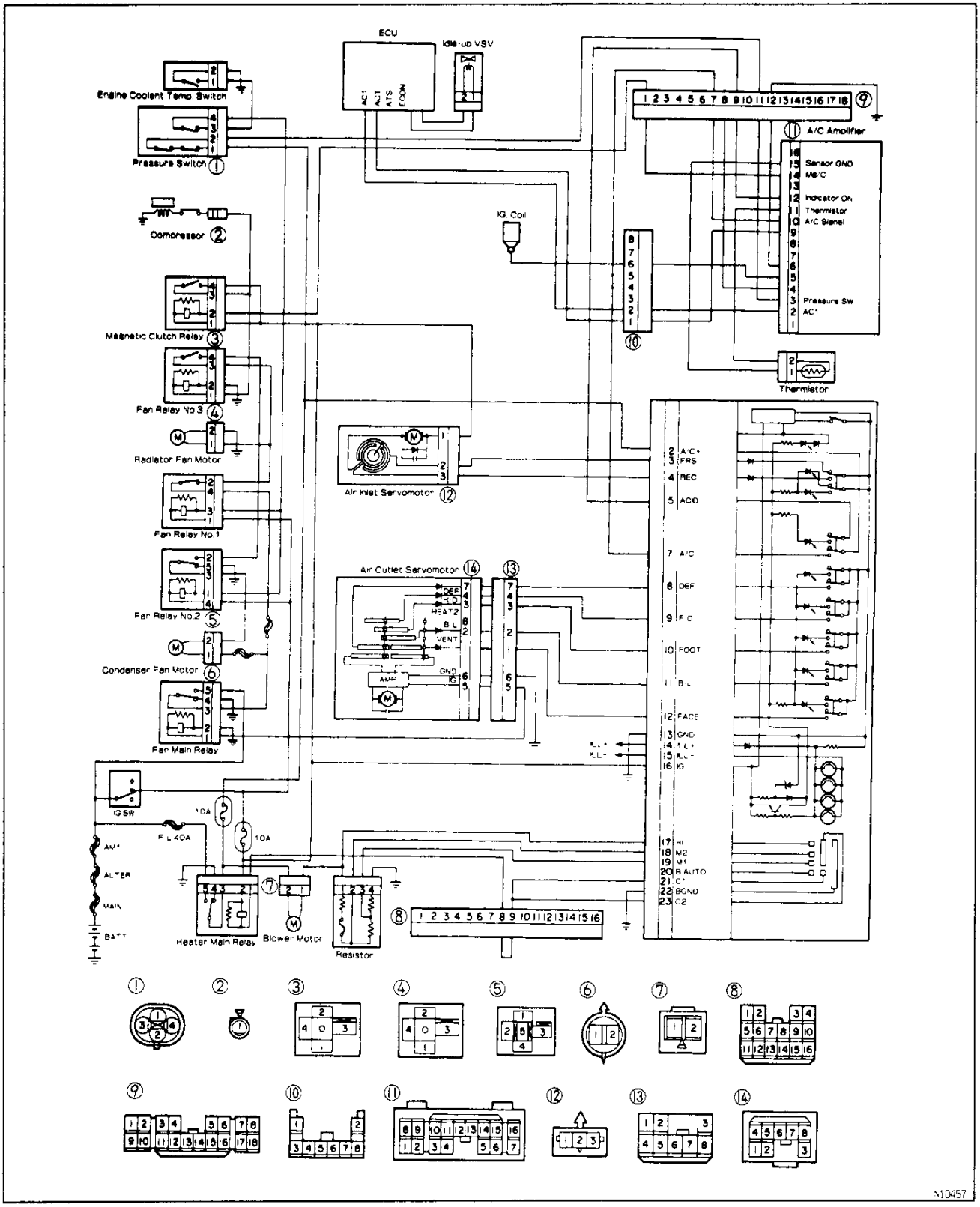

Downloaded from www.Manualslib.com manuals search engine

5S–FE, 3S–FE and 3S–GE Engine Models:

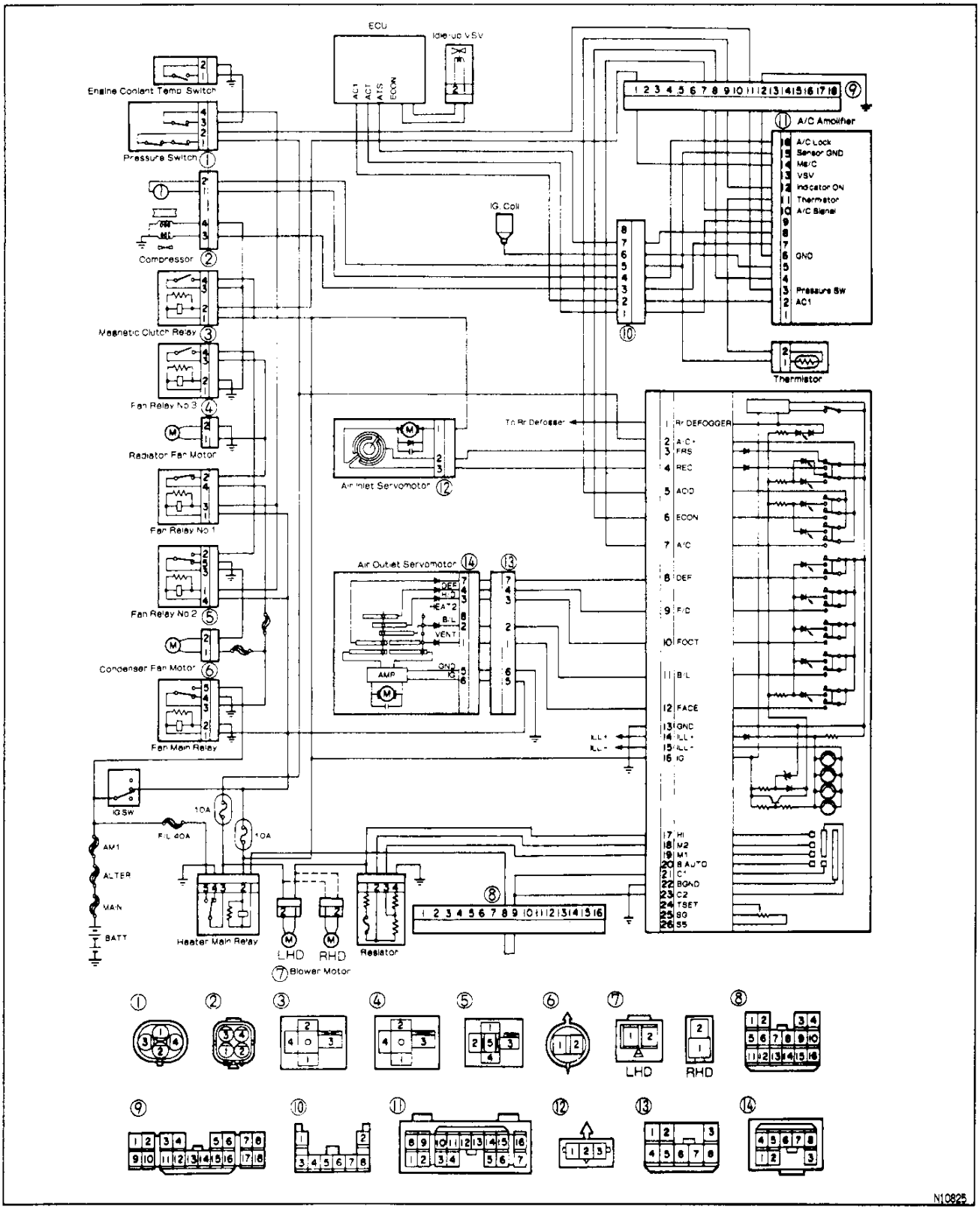

Downloaded from www.Manualslib.com manuals search engine

AC16N-01

DAMPER POSITIONS

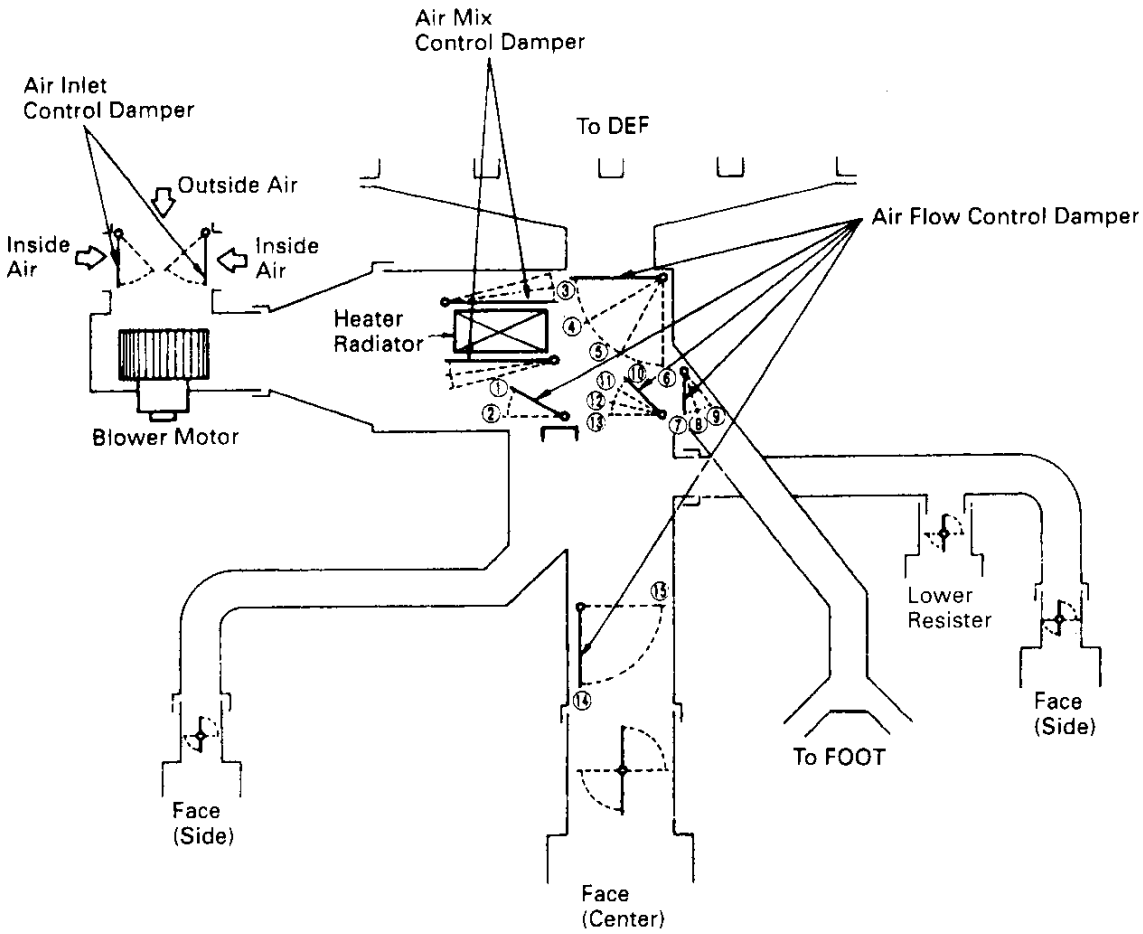

Air Outlet Mode		Mode Control Damper Position	Air Flow Vents			
			Center	Side	Foot	Defroster
Face		③ ⑦ ⑩ ⑭	○	○		
Bi-Level		③ ⑧ ⑪ ⑭	○	○	○	
Foot		④ ⑨ ⑬ ⑮		○	○	○
Foot/ Defroster		⑤ ⑧ ⑫ ⑮		○	○	○
Defroster		⑥ ⑦ ⑫ ⑮		○		○

N10072
N10459

The size of circle (○) indicates the proportion of the air flow volume.

Z11408

Downloaded from www.Manualslib.com manuals search engine

PREPARATION

ACONH-0L

SST(SPECIAL SERVICE TOOLS)

	07110-58060 Air Conditioner Service Tool Set	
	(07117-78050) Refrigerant Charging Gauge	
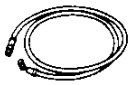	(07117-88060) Refrigerant Charging Hose	Discharge (Red)
	(07117-88070) Refrigerant Charging Hose	Suction (Blue)
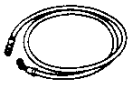	(07117-88080) Refrigerant Charging Hose	Utility (Green)
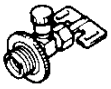	(07117-58060) Refrigerant Drain Service Valve	
	(07117-58080) Quick Disconnect Adapter	Discharge (diam. 16 mm)
	(07117-58090) Quick Disconnect Adapter	Suction (diam. 13 mm)
	(07117-58070) T-Joint	
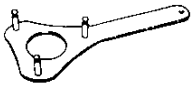	07112-76060 Magnetic Clutch Stopper	
	07112-66040 Magnetic Clutch Remover	
	07114-84010 Snap Ring Pliers	
	07114-84020 Snap Ring Pliers	

AC

Downloaded from www.Manualslib.com manuals search engine

	07116–38360 Gas Leak Detector Assembly	
	07110–61050 Wrench Set	
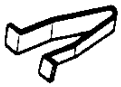	07112–15020 Seal Plate Remover	
	07112–85030 Lip Seal Remover	
	07112–85020 Lip Seal Presser	
	07112–85010 Lip Seal Protector	
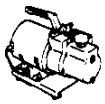	07117–48130 Vacuum Pump (220 V)	
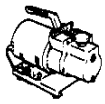	07117–48140 Vacuum Pump (240 V)	

AC0ZY–08

RECOMMENDED TOOL

	09082–00050 TOYOTA Electrical Tester Set.	

AC0V3–0K

LUBRICANT

Item	Capacity	Classification
Compressor oil	–	ND–OIL 8 or equivalent
When replacing receiver	10 cc (2.9 fl.oz.)	
When replacing condenser	40 cc (1.4 fl.oz.)	
When replacing evaporator	40 cc (1.4 fl.oz.)	
When replacing compressor	120 cc (4.1 fl.oz.)	

Downloaded from www.Manualslib.com manuals search engine

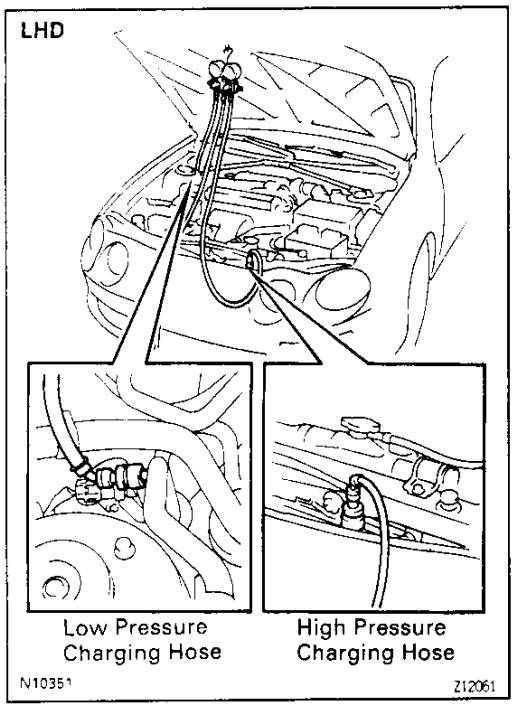

USE OF MANIFOLD GAUGE SET

MANIFOLD GAUGE SET INSTALLATION

AC19G-01

1. **CONNECT CHARGING HOSES TO MANIFOLD GAUGE SET**
   Tighten the nuts by hand.
   CAUTION: Do not connect the wrong hoses.
2. **CONNECT QUICK CONNECTORS TO CHARGING HOSES**
   Tighten the nuts by hand.
3. **CLOSE BOTH HAND VALVES OF MANIFOLD GAUGE SET**
4. **REMOVE CAPS FROM SERVICE VALVES ON REFRIGERANT LINE**

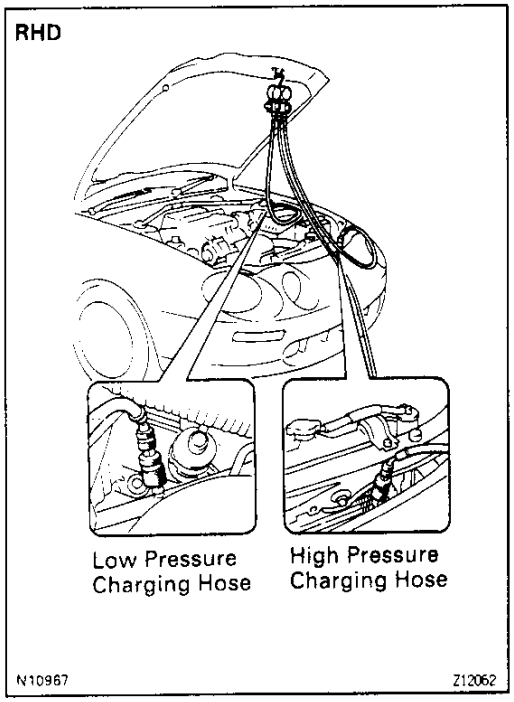

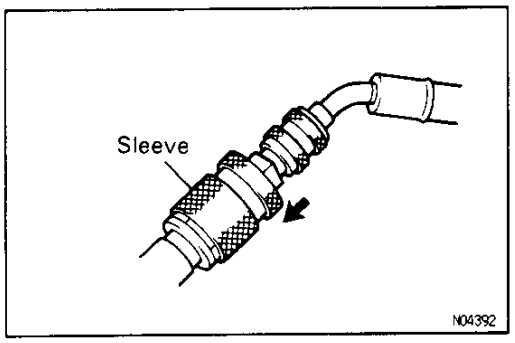

5. **CONNECT QUICK CONNECTORS TO SERVICE VALVES**
   HINT: Push the quick connector on to the service valve, then slide the sleeve of the quick connector downward to lock it.

AC

Downloaded from www.Manualslib.com manuals search engine

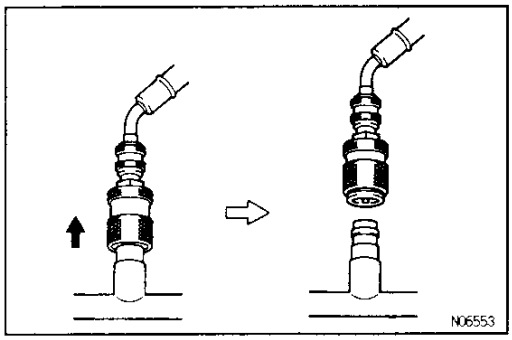

ACONM-03

MANIFOLD GAUGE SET REMOVAL

1. **CLOSE BOTH HAND VALVES OF MANIFOLD GAUGE SET**
2. **DISCONNECT QUICK CONNECTORS FROM SERVICE VALVES ON REFRIGERANT LINE**
   HINT: Slide the sleeve of the quick connector upward to unlock the connector and remove it from the service valve.
3. **INSTALL CAPS TO SERVICE VALVES ON REFRIGERANT LINE**

AC

Downloaded from www.Manualslib.com manuals search engine

—MEMO—

Downloaded from www.Manualslib.com manuals search engine

TROUBLESHOOTING

Use the table below to help you find the cause of the problem. The numbers indicate the priority ofthe likely cause of the problem. Check each part in order. If necessary, replace these parts.

See page	AC-25	AC-20	AC-26	–	–	AC-74	AC-76	AC-77	AC-78	AC-79
Parts Name / Trouble	Inspect Volume of Refrigerant	Inspect Refrigeration System with Manifold Gauge Set	Inspect Drive Belt Tension	Fusible Link	Fuse (A/C)	Pressure Switch	Evaporator Temp. Sensor	Revolution Detecting Sensor	Magnetic Clutch Relay	A/C Fan Relays
No blower operation				1						
No blower control										
No air flow mode control										
No air inlet control										
Insufficient flow of cool air										
Insufficient flow of warm air										
No cool air comes out	3	4	5		1	6	13	9	2	
Cool air comes out intermittently	1	2	3				6	4		
Cool air comes out only at high engine speed	2	3	1							
Insufficient cooling	1	2	3			7	12			6
No warm air comes out										
Air temp. control not functioning										
No engine idle up when A/C switch on										

V05041

AC

Downloaded from www.Manualslib.com manuals search engine

AC-73	AC-70	AC-71	AC-67	AC-68	AC-82	AC-80	AC-41	AC-60	AC-62	AC-60	AC-58	AC-64	–
Blower Resistor	Air Inlet Servomotor	Air outlet Servomotor	Blower Motor	Condenser Fan Motor	A/C Control Assembly	A/C Amplifier	Compressor	Condenser	Evaporator	Magnetic Clutch	Receiver	Expansion Valve (Replace)	Wiring or Wiring Connection
4			3		2								5
					1								2
		2			1								3
	2				1								3
2			1						3				4
2			1										3
					10	12	8			7			14
						5						7	8
							5	4					
				8		11	10	4	13	9	5	14	
					1								2
					1								2
						1							2

V05042

AC

Downloaded from www.Manualslib.com manuals search engine

AC0ZZ-01

REFRIGERANT SYSTEM INSPECTION WITH MANIFOLD GAUGE SET

This is a method in which the trouble is located by using a manifold gauge set.
(See "USE OF MANIFOLD GAUGE SET" on page AC–15)
Read the manifold gauge pressure when the following conditions are established:

(a) Temperature at the air inlet with the switch set at RECIRC is 30 – 35 °C (86 – 95 °F)
(b) Engine running at 1,500 rpm
(c) Blower speed control switch set at high
(d) Temperature control set at max. cool
HINT: It should be noted that the gauge indications may vary slightly due to ambient temperature conditions.

AC100-01

1. NORMALLY FUNCTIONING REFRIGERATION SYSTEM

Gauge reading:

Low pressure side:

0.15 – 0.25 MPa (1.5 – 2.5 kgf/cm²)

High pressure side:

1.37 – 1.57 MPa (14 – 16 kgf/cm²)

AC

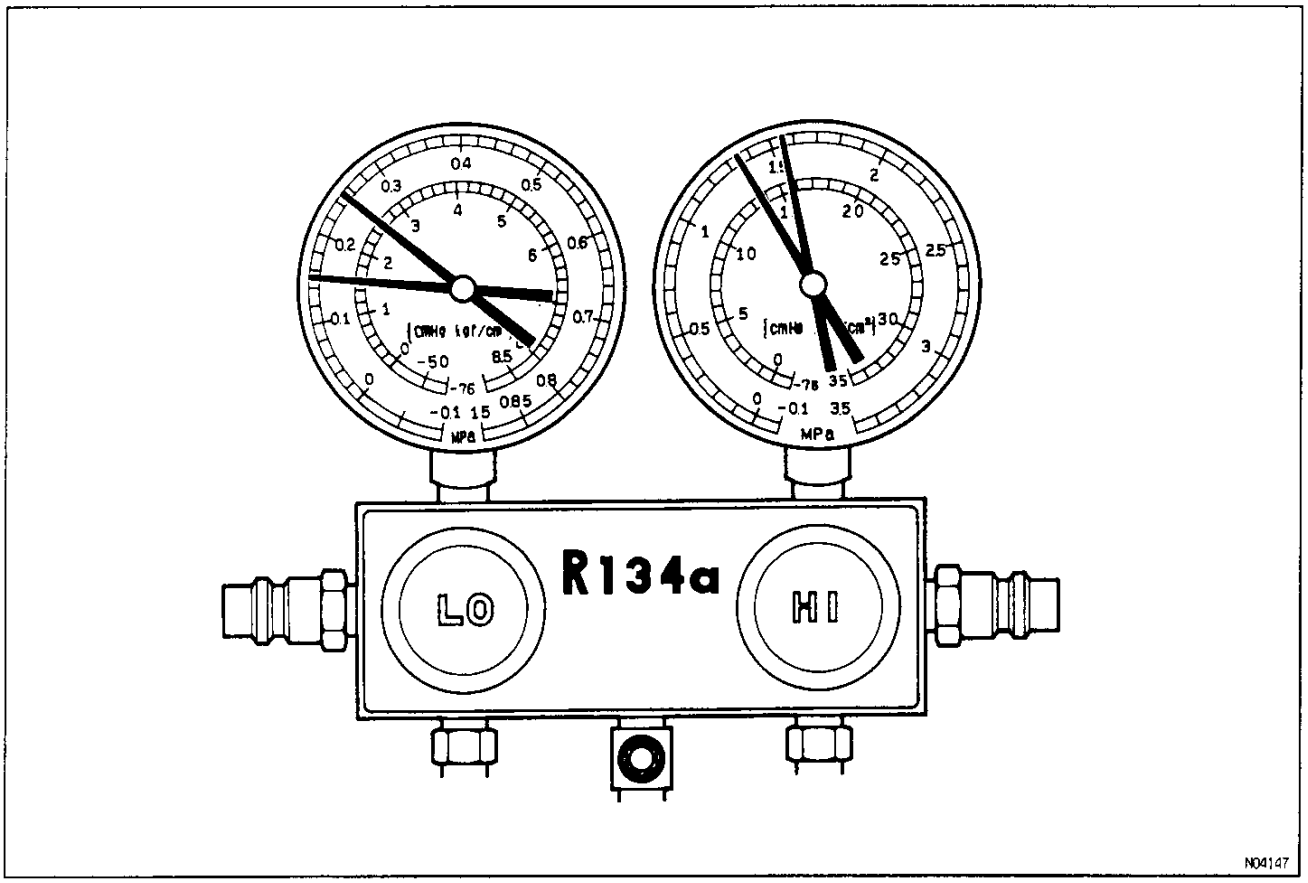

N04147

Downloaded from www.Manualslib.com manuals search engine

2. MOISTURE PRESENT IN REFRIGERATION SYSTEM

Condition: Periodically cools and then fails to cool

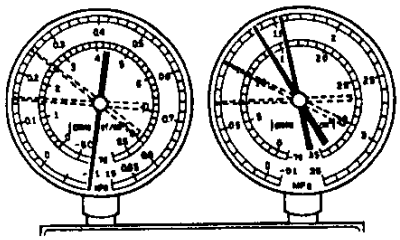

N04148

Symptom seen in refrigeration system	Probable cause	Diagnosis	Remedy
• During operation, pressure on low pressure side sometimes becomes a vacuum and sometimes normal	• Moisture entered in refrigeration system freezes at expansion valve orifice and temporarily stops cycle, but normal state is restored after a time when the ice melts	• Drier in oversaturated state ↓ • Moisture in refrigeration system freezes at expansion valve orifice and blocks circulation of refrigerant	(1) Replace receiver/drier (2) Remove moisture in cycle through repeatedly evacuating air (3) Charge new refrigerant to proper amount

V01034

3. INSUFFICIENT REFRIGERANT

Condition: Insufficient cooling

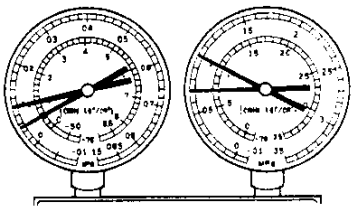

N04149

Symptom seen in refrigeration system	Probable cause	Diagnosis	Remedy
• Pressure low on both low and high pressure sides • Bubbles seen in sight glass continuously • Insufficient cooling performance	• Gas leakage at some place in refrigeration system	• Insufficient refrigerant in system ↓ • Refrigerant leaking	(1) Check for gas leakage with leak detector and repair if necessary (2) Charge refrigerant to proper amount (3) If pressure indicated value is near 0 when connected to gauge, create the vacuum after inspecting and repairing the location of the leak

V01035

Downloaded from www.Manualslib.com manuals search engine

4. POOR CIRCULATION OF REFRIGERANT

Condition: Insufficient cooling

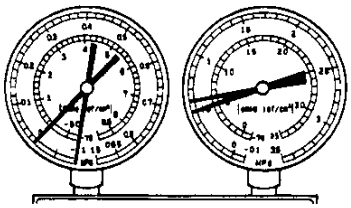

N04150

Symptom seen in refrigeration system	Probable cause	Diagnosis	Remedy
• Pressure low on both low and high pressure sides • Frost on tubes from receiver to unit	• Refrigerant flow obstructed by dirt in receiver	• Receiver clogged	• Replace receiver

V01030

5. REFRIGERANT DOES NOT CIRCULATE

AC

Condition: Does not cool (Cools from time to time in some cases)

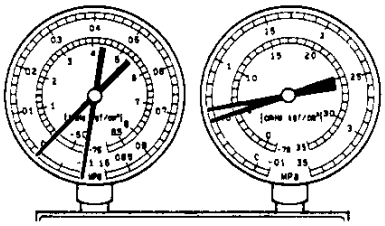

N04150

Symptom seen in refrigeration system	Probable cause	Diagnosis	Remedy
• Vacuum indicated on low pressure side, very low pressure indicated on high pressure side • Frost or dew seen on piping before and after receiver/drier or expansion valve	• Refrigerant flow obstructed by moisture or dirt in refrigeration system • Refrigerant flow obstructed by gas leakage from expansion valve heat sensing tube	• Refrigerant does not circulate	(1) Check heat sensing tube, expansion valve (2) Clean out dirt in expansion valve by blowing with air If not able to remove dirt, replace expansion valve (3) Replace receiver (4) Evacuate air and charge new refrigerant to proper amount. For gas leakage from heat sensing tube, replace expansion valve.

V01041

Downloaded from www.Manualslib.com manuals search engine

6. REFRIGERANT OVERCHARGE OR INSUFFICIENT COOLING OF CONDENSER

Condition: Does not cool sufficiently

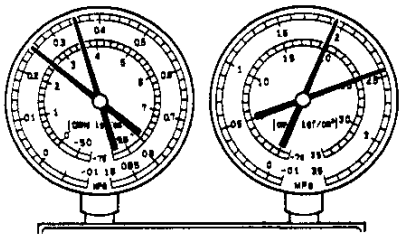

N04151

Symptom seen in refrigeration system	Probable cause	Diagnosis	Remedy
• Pressure too high on both low and high pressure sides • No air bubbles seen through the sight glass even when the engine rpm is lowered.	• Unable to develop sufficient performance due to excessive refrigerant in system • Insufficient cooling of condenser	• Excessive refrigerant in cycle → refrigerant overcharged • Condenser cooling insufficient → condenser fins clogged or fan motor faulty	(1) Clean condenser (2) Check fan motor operation (3) If (1) and (2) are in normal state, check amount of refrigerant Charge proper amount of refrigerant

V01032

7. AIR PRESENT IN REFRIGERATION SYSTEM

Condition: Does not cool down sufficiently

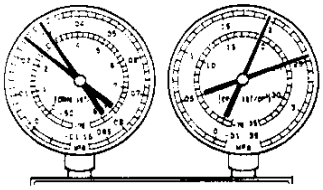

NOTE: These gauge indications are shown when the refrigeration system has been opened and the refrigerant charged without vacuum purging.

N04153

Symptom seen in refrigeration system	Probable cause	Diagnosis	Remedy
• Pressure too high on both low and high pressure sides • The low pressure piping is hot to the touch • Bubbles seen in sight glass	• Air entered in refrigeration system	• Air present in refrigeration system ↓ • Insufficient vacuum purging	(1) Check compressor oil to see if dirty or insufficient (2) Evacuate air and charge new refrigerant

V01033

Downloaded from www.Manualslib.com manuals search engine

8. EXPANSION VALVE IMPROPERLY MOUNTED/HEAT SENSING TUBE DEFECTIVE (OPENS TOO WIDE)

Condition: Insufficient cooling

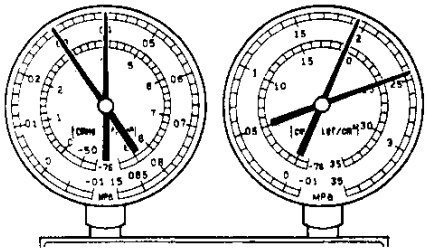

N04152

Symptom seen in refrigeration system	Probable cause	Diagnosis	Remedy
• Pressure too high on both low and high pressure sides • Frost or large amount of dew on piping on low pressure side	• Trouble in expansion valve or heat sensing tube not installed correctly	• Excessive refrigerant in low pressure piping ↓ • Expansion valve opened too wide	(1) Check heat sensing tube installed condition (2) If (1) is normal, check expansion valve Replace if defective

V01031

AC

9. DEFECTIVE COMPRESSION COMPRESSOR

Condition: Does not cool

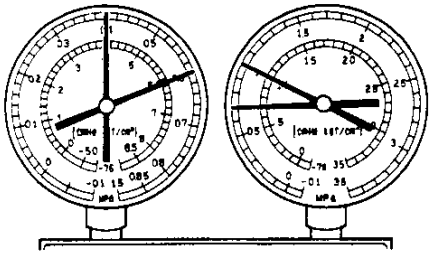

N04146

Symptom seen in refrigeration system	Probable cause	Diagnosis	Remedy
• Pressure too high on low pressure side • Pressure too low on high pressure side	• Internal leak in compressor	• Compression defective ↓ • Valve leaking or broken, sliding parts	• Repair or replace compressor

V01029

Downloaded from www.Manualslib.com manuals search engine

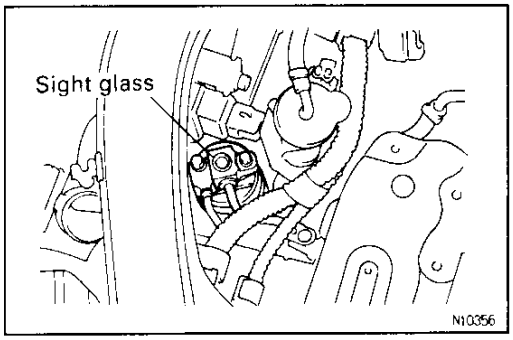

REFRIGERANT VOLUME

AC00G-0N

REFRIGERANT VOLUME INSPECTION

1. **RUN ENGINE AT IDLE SPEED**
2. **OPERATE A/C AT MAXIMUM COOLING FOR A FEW MINUTES**
3. **INSPECT AMOUNT OF REFRIGERANT**
   Observe the sight glass on the liquid tube.

Item	Symptom	Amount of refrigerant	Remedy
1	Bubbles present in sight glass	Insufficient*	(1) Check for gas leakage with gas leak tester and repair if necessary (2) Add refrigerant until bubbles disapear
2	No bubbles present in sight glass	None, sufficient or too much	Refer to items 3 and 4
3	No temperature difference between compressor inlet and outlet	Empty or nearly empty	(1) Check for gas leakage with gas leak tester and repair if necessary (2) Add refrigerant until bubbles disappear
4	Temperature between compressor inlet and outlet is noticeably different	Proper or too much	Refer to items 5 and 6
5	Immediately after air conditioner is turned off, refrigerant in sight glass stays clear	Too much	(1) Discharge refrigrant (2) Evacuate air and charge proper amount of purified refrigerant
6	When air conditioner is turned off, refrigerant foams and then stay clear	Proper	—

*: Bubbles in the sight glass with ambient temperatuers higher than usual can be considered normal if cooling is sufficient.

AC00H-0J

REFRIGERANT CHARGE VOLUME

Specified amount:

650 ± 50 g (22.92 ± 1.76 oz.)

Downloaded from www.Manualslib.com manuals search engine

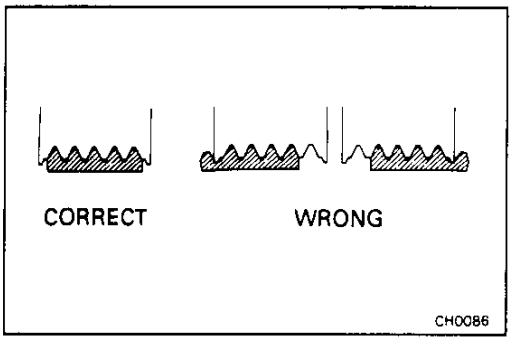

DRIVE BELT TENSION

DRIVE BELT TENSION CHECK

AC1LE-02

1. **INSPECT DRIVE BELT'S INSTALLATION CONDITION**
   Check that the drive belt fits properly in the ribbed grooves.

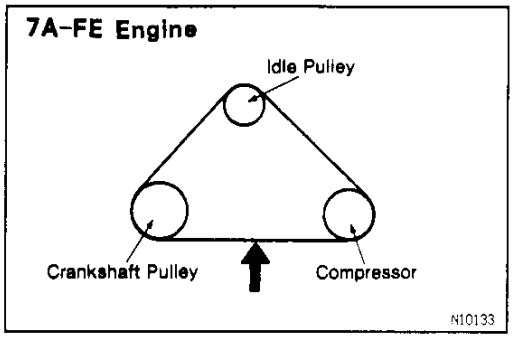

2. **INSPECT DRIVE BELT DEFLECTIN**
   Using SST, apply a load 9.8 N (10 kgf, 22 lbf).
   Measure drive belt deflection.
   7A–FE Engine:
   6.0 – 7.0 mm (0.23 – 0.27 in.)
   5S–FE and 3S–FE Engine:
   6.0 – 9.0 mm (0.23 – 0.35 in.)
   3S–GE Engine:
   9.0 – 11.0 mm (0.35 – 0.43 in.)
   Reference
   Using SST, check the drive belt tension.
   Drive belt tension
   7A–FE Engine:
   New blet: 520 – 755 N (53 – 77 kgf)
   Used belt: 264 – 353 N (27 – 36 kgf)
   5S–FE and 3S–FE Engine:
   New belt: 617 – 853 N (63 – 87 kgf)
   Used belt: 441 – 530 N (45 – 54 kgf)
   3S–GE Engine:
   New belt: 617 – 853 N (63 – 87 kgf)
   Used belt: 333 – 422 N (34 – 43 kgf)
   HINT:
   - "New belt" refers to a belt which has been used less than 5 minutes on a running engine.
   - "Used belt" refers to a belt which has been on a running engine for 5 minutes or more.
   - After installing the drive belt, check that it fits properly in the ribbed grooves.

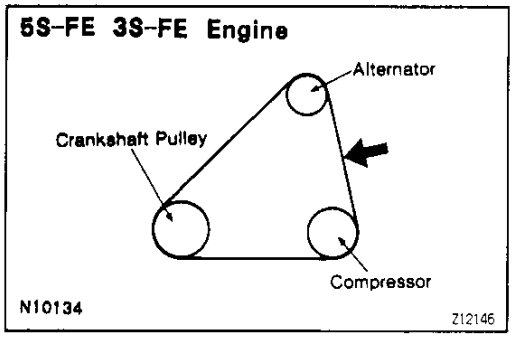

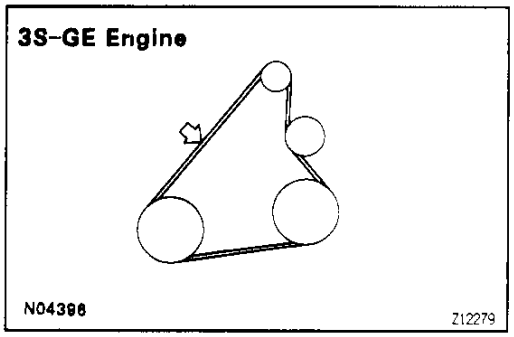

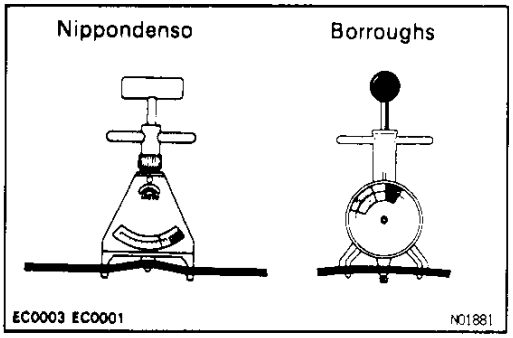

AC

Downloaded from www.Manualslib.com manuals search engine

IDLE—UP SPEED

AC160-02

IDLE UP SPEED INSPECTION

1. **WARM UP ENGINE**
2. **INSPECT IDLE SPEED**

7A—FE

Magnetic clutch condition	Standard idle speed (rpm)
Not engaged	Approx. 700
Engaged	Approx. 900

5S—FE

Magnetic clutch condition	Standard idle speed (rpm)
Not engaged	Approx. 750
Engaged	Approx. 850

3S—FE

Magnetic clutch condition	Standard idle speed (rpm)
Not engaged	Approx. 800
Engaged	Approx. 900

3S—GE

Magnetic clutch condition	Standard idle speed (rpm)
Not engaged	Approx. 850
Engaged	Approx. 950

Downloaded from www.Manualslib.com manuals search engine

REFRIGERANT LINES

AC19K-01

TIGHTENING TORQUE OF REFRIGERATION LINES

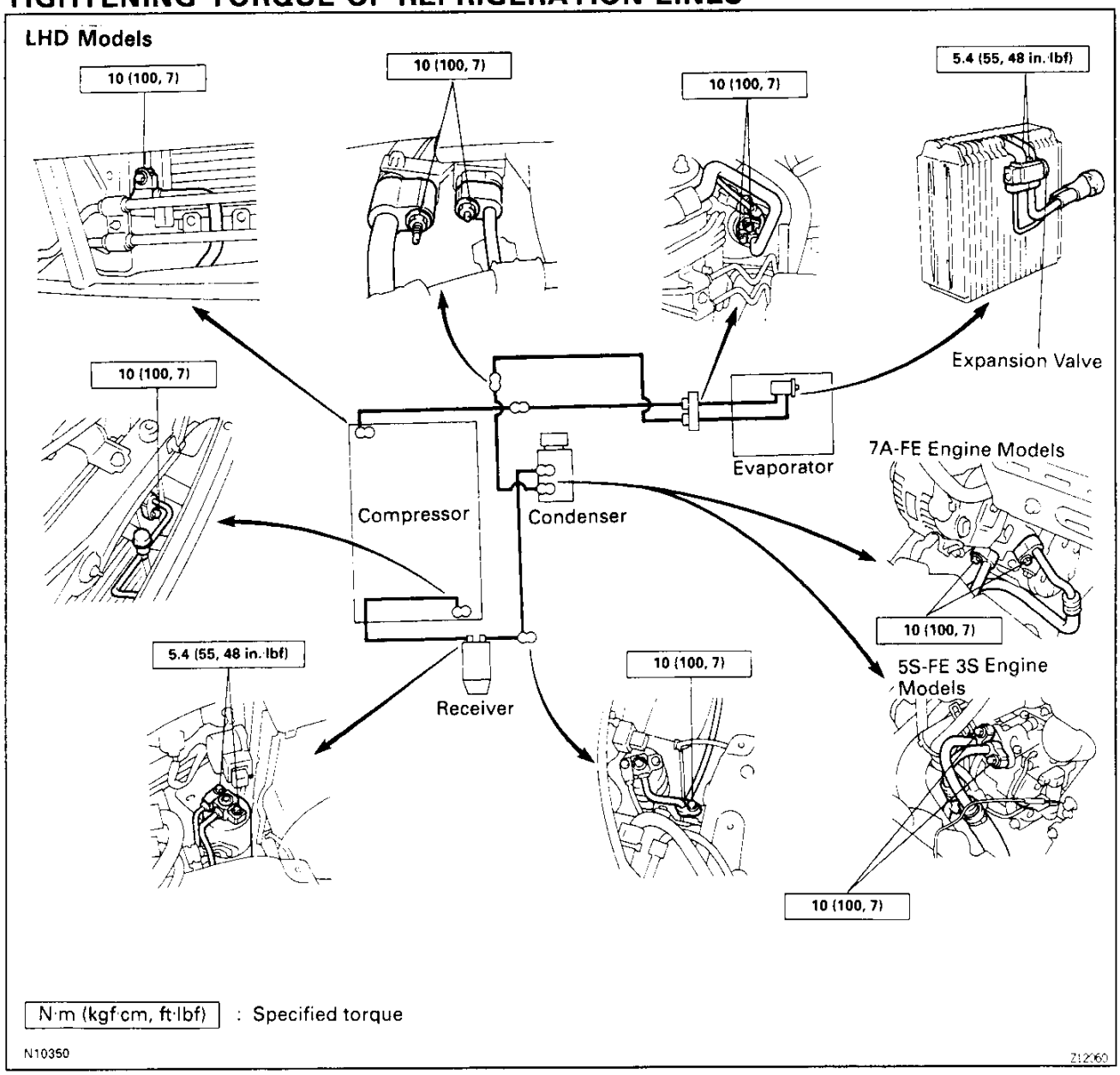

AC

Downloaded from www.Manualslib.com manuals search engine

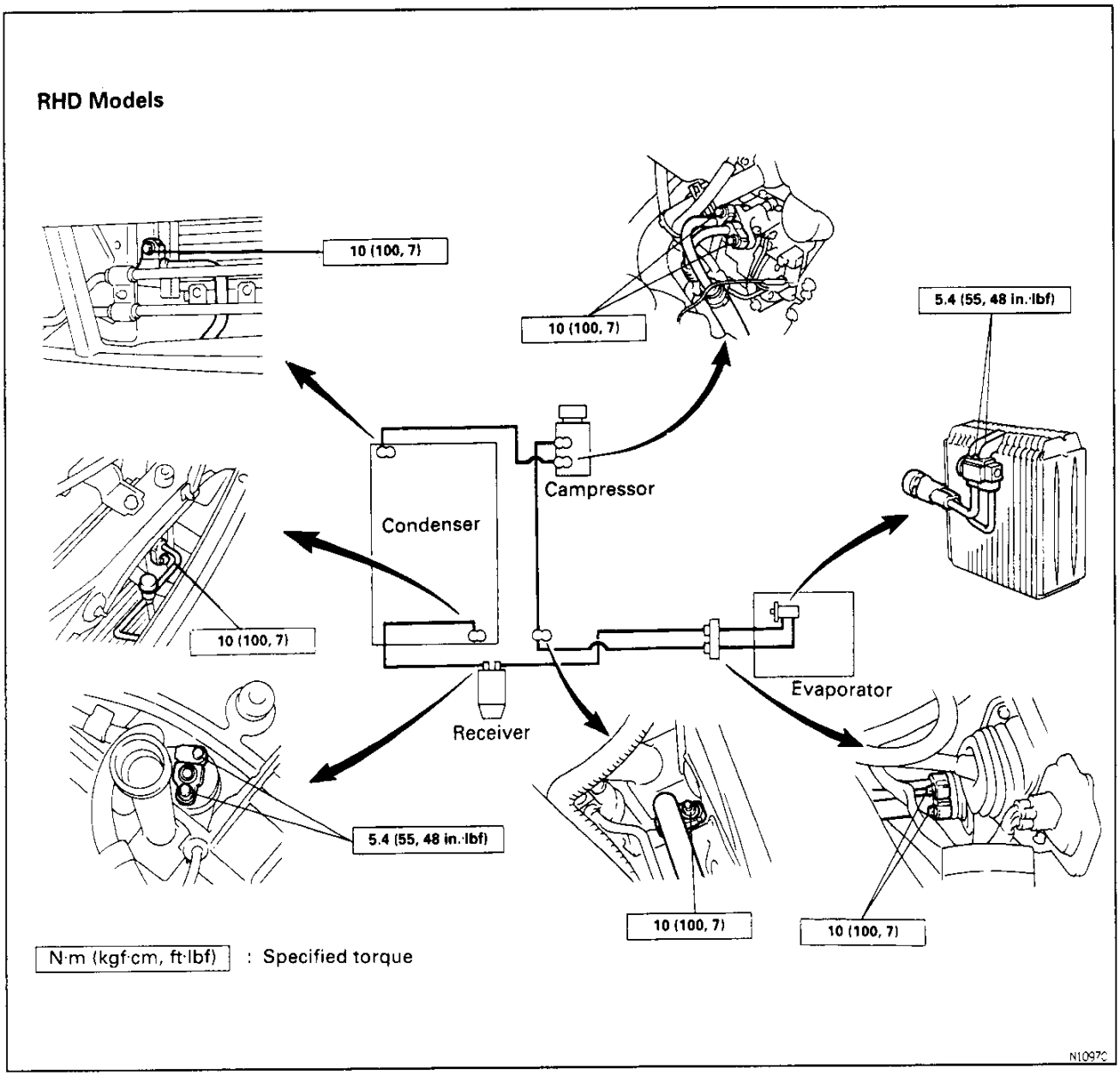

AC168-01

ON–VEHICLE INSPECTION

1. **INSPECT HOSE AND TUBE CONNECTIONS FOR LOOSENESS**
2. **INSPECT HOSES AND TUBES FOR LEAKAGE**
   Using a gas leak tester, check for leakage of refrigerant.

AC

Downloaded from www.Manualslib.com manuals search engine

REFRIGERANT LINES REPLACEMENT

AC16T-01

1. **DISCHARGE REFRIGERANT IN REFRIGERATION SYSTEM**
   (See page AC–15)
2. **REPLACE FAULTY TUBE OR HOSE**
   HINT: Cap the open fittings immediately to keep moisture or dirt out of the system.
3. **TORQUE CONNECTIONS TO SPECIFIED TORQUE**
   NOTICE: Connections should not be torqued tighter than the specified torque.
4. **EVACUATE AIR IN REFRIGERATION SYSTEM AND CHARGE WITH REFRIGERANT**
   Specified amount:
   650 ± 50 g (22.92 ± 1.76 oz.)
5. **INSPECT FOR LEAKAGE OF REFRIGERANT**
   Using a gas leak tester, check for leakage of refrigerant.
6. **INSPECT AIR CONDITIONING OPERATION**

Downloaded from www.Manualslib.com manuals search engine

COOLING UNIT

AC19J-01

COOLING UNIT REMOVAL

1. **DISCONNECT NEGATIVE (–) TERMINAL CABLE FROM BATTERY**
   CAUTION: Work must be started after 90 seconds from the time the ignition switch is turned to the "LOCK" position and the negative (–) terminal cable is disconnected from the battery.
2. **DISCHARGE REFRIGERANT FROM REFRIGERATION SYSTEM**
   (See page AC–15)
3. **DISCONNECT SUCTION TUBE AND LIQUID TUBE FROM COOLING UNIT FITTING**
   HINT: Cap the open fittings immediately to keep moisture out of the system.
4. **REMOVE GROMMETS FROM INLET AND OUTLET FITTINGS**
5. **REMOVE DRAIN PIPE GROMMET**
6. **REMOVE INSTRUMENT PANEL AND REINFORCEMENT**
   (See page BO–52)
7. **DISCONNECT CONNECTORS**
8. **REMOVE COOLING UNIT**
   Remove 3 nuts and 4 screws.

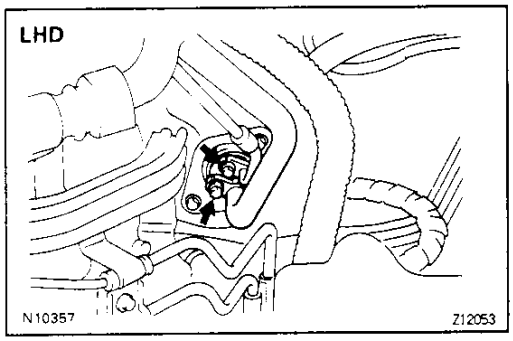

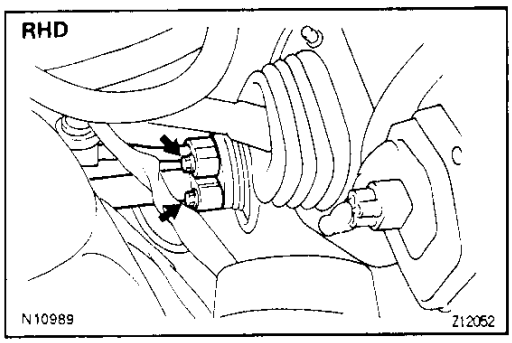

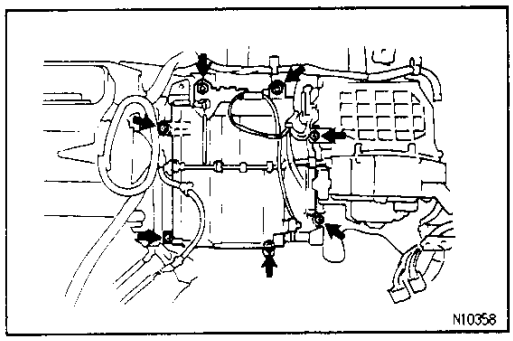

Downloaded from www.Manualslib.com manuals search engine

AC16V-01

COOLING UNIT DISASSEMBLY

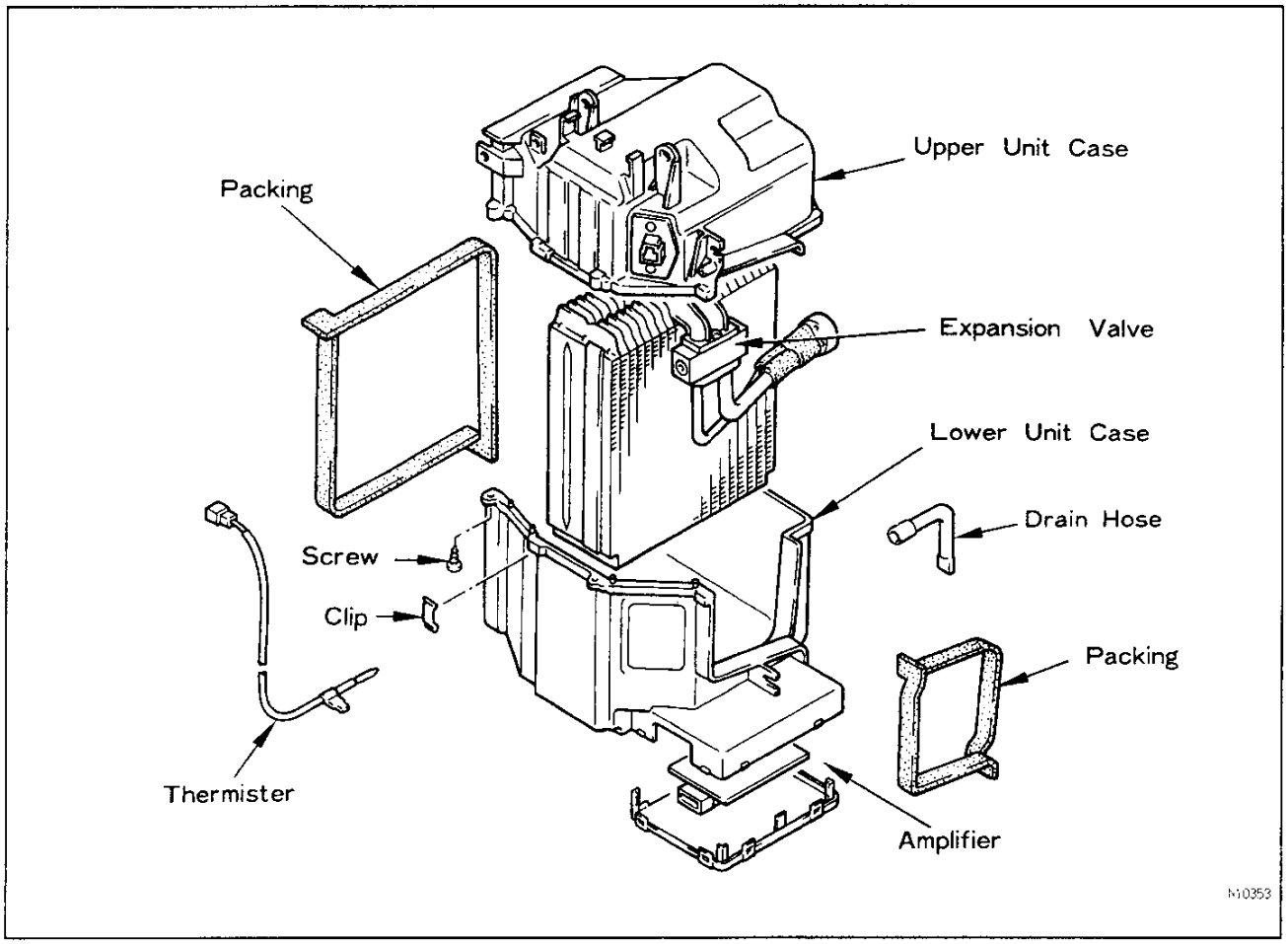

AC

1. REMOVE LOWER AND UPPER UNIT CASES

(a) Disconnect the connectors.
(b) Remove the 4 clips.
(c) Remove the 4 screws.
(d) Remove the upper unit case.
(e) Remove the thermistor with thermistor holder.
(f) Remove the lower unit case.

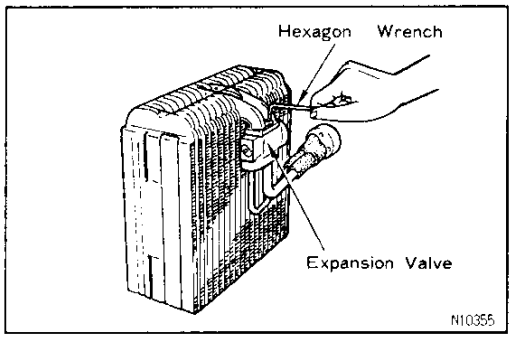

2. REMOVE EXPANSION VALVE

(a) Remove the packing and heat sensing tube from suction and liquid tubes.
(b) Using a hexagon wrench, remove the 2 bolts and separate the evaporator and expansion valve.

Downloaded from www.Manualslib.com manuals search engine

AC16W-01

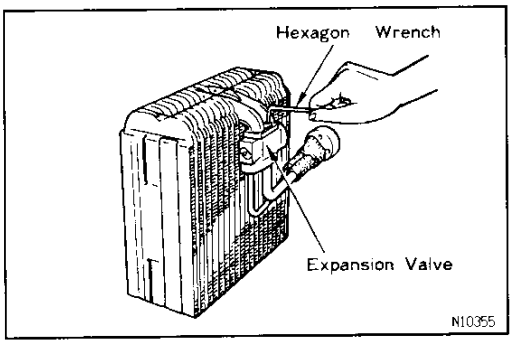

COOLING UNIT ASSEMBLY

INSTALL COMPONENTS ON EVAPORATOR

(a) Using a hexagon wrench, install the expansion valve to the evaporator. Torque the 2 bolts.
Torque: 5.4 N·m (55 kgf·cm, 48 in.·lbf)
HINT: Be sure that the O–rings are positioned on the tube fitting.
(b) Install the lower unit case to the evaporator.
(c) Install the thermistor to the evaporator.
(d) Install the upper unit case.
(e) Install the 4 screws.
(f) Install the 4 clips.
(g) Connect the connectors.

AC19K-01

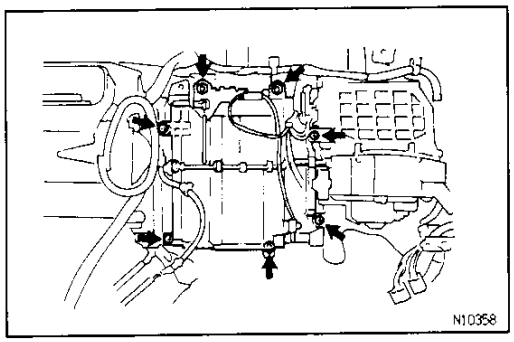

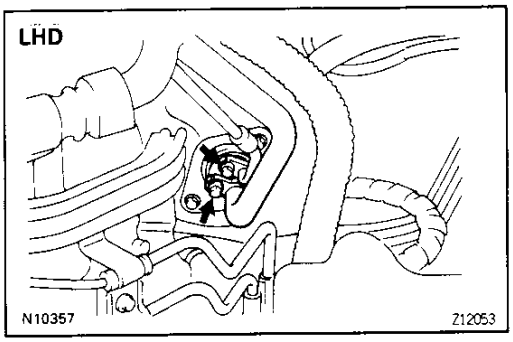

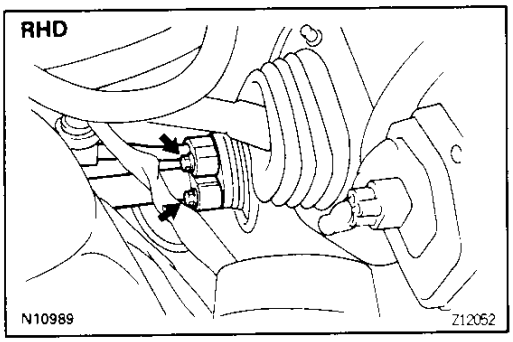

COOLING UNIT INSTALLATION

1. **INSTALL COOLING UNIT**
   Install the cooling unit with 3 nuts and 4 screws.
2. **CONNECT CONNECTORS**
3. **INSTALL INSTRUMENT PANEL AND REINFORCEMENT**
   (See page BO–52)
4. **INSTALL DRAIN PIPE GROMMET**
5. **INSTALL GROMMETS ON INLET AND OUTLET FITTING**
6. **CONNECT LIQUID TUBE TO COOLING UNIT INLET FITTING**
   Torque: 10 N·m (100 kgf·cm, 7 ft·lbf)
7. **CONNECT SUCTION TUBE TO COOLING UNIT OUTLET FITTING**
   Torque: 10 N·m (100 kgf·cm, 7 ft·lbf)
8. **IF EVAPORATOR WAS REPLACED, ADD COMPRESSOR OIL TO COMPRESSOR**
   Add 40cc (1.4 fl.oz.)
   Compressor oil:
   ND OIL 8 or equivalent
9. **CONNECT NEGATIVE (–) TERMINAL CABLE TO BATTERY**
10. **EVACUATE AIR IN REFRIGERANT SYSTEM AND CHARGE WITH REFRIGERANT**
    Specified amount:
    650 ± 50 g (22.92 ± 1.76 oz.)
11. **INSPECT A/C OPERATION**

AC

Downloaded from www.Manualslib.com manuals search engine

HEATER UNIT

HEATER UNIT REMOVAL

AC18L-01

1. **DISCONNECT NEGATIVE (−) TERMINAL CABLE FROM BATTERY**
   CAUTION: Work must be started after 90 seconds from the time the ignition switch is turned to the "LOCK" position and the negative (−) terminal cable is disconnected from the battery.
2. **REMOVE INSTRUMENT PANEL**
   (See page BO−52)
3. **REMOVE COOLING UNIT**
   (See page AC−31)
4. **DRAIN ENGINE COOLANT FROM RADIATOR AND ENGINE DRAIN COCKS**
5. **REMOVE WATER HOSE FROM HEATER UNIT**
   (a) Remove the control cable from the water valve.
   (b) Remove the bolt and the water valve.
   (c) Grip the claws of the hose clip with pliers and slide the clip along the hose to a place where it does not clamp the hose to the pipe.
   (d) Disconnect the water hoses.
6. **REMOVE PIPE GROMMETS**

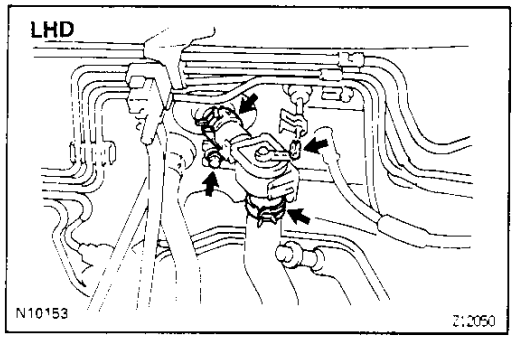

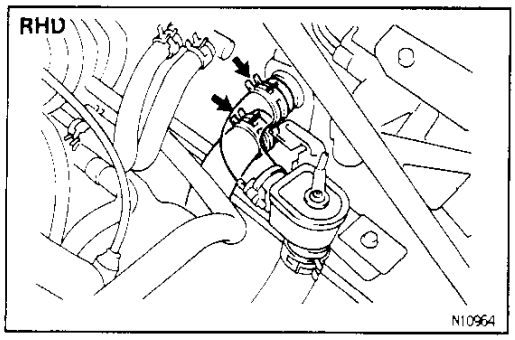

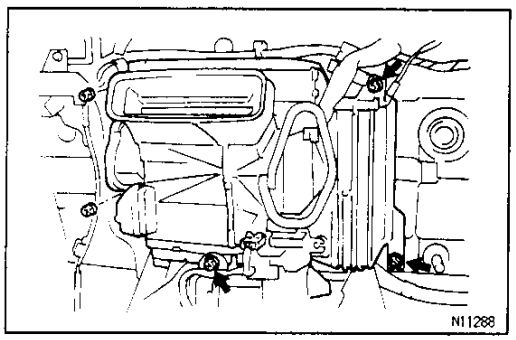

7. **REMOVE HEATER UNIT**
   (a) Disconnect the connecter.
   (b) Remove the wire harness.
   (c) Remove the 4 nuts and a screw.
   (d) Remove the heater unit.

AC

Downloaded from www.Manualslib.com manuals search engine

AC18Z-01

HEATER UNIT DISASSEMBLY

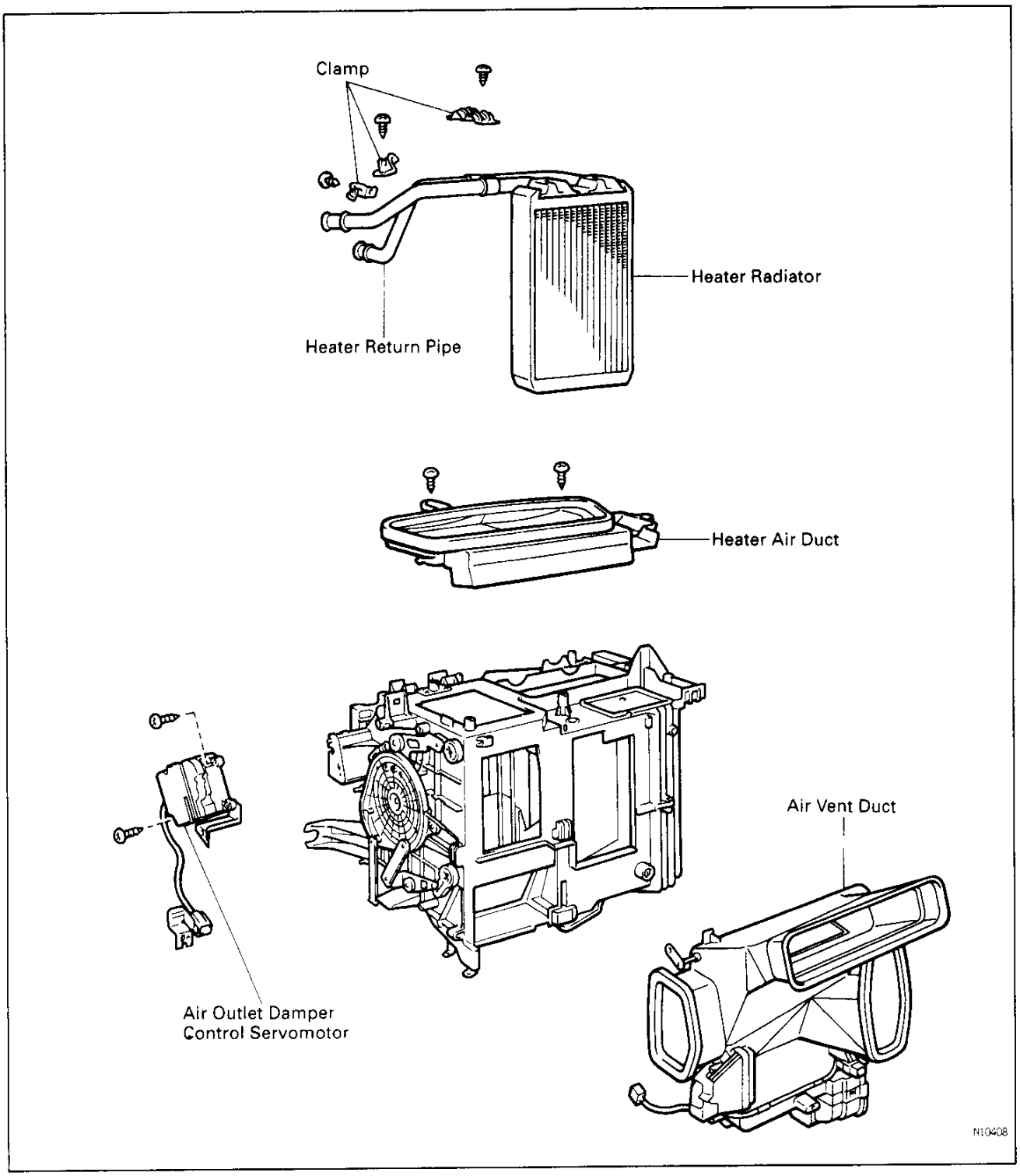

Downloaded from www.Manualslib.com manuals search engine

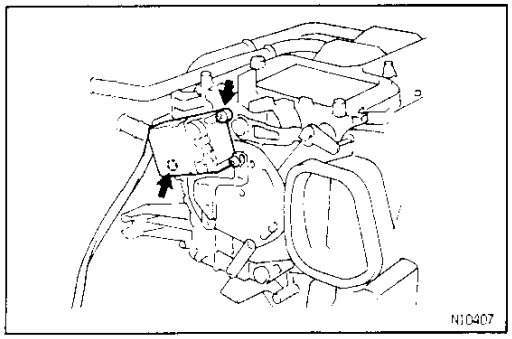

1. REMOVE AIR OUTLET DAMPER CONTROL SERVOMOTOR

Remove the 2 screws and the air outlet damper control servomotor.

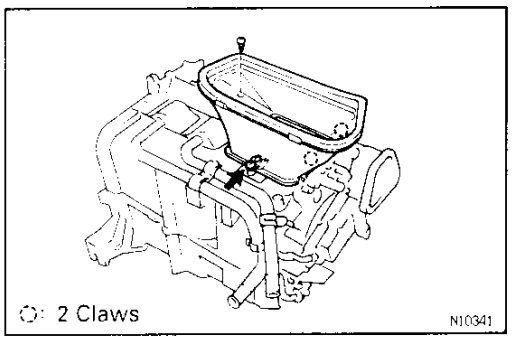

2. REMOVE HEATER AIR DUCT

(a) Remove the 2 screws.

(b) Disconnect the 2 claws and remove the heater air duct.

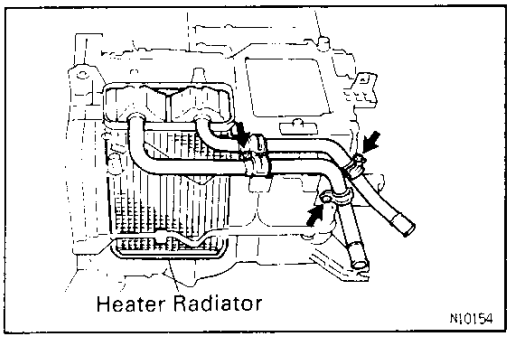

3. REMOVE HEATER RADIATOR

(a) Remove the 3 screws and the pipe clamps.

(b) Pull out the heater radiator unit with heater return pipe.

AC

Downloaded from www.Manualslib.com manuals search engine

AC160-01

HEATER UNIT ASSEMBLY

1. **INSTALL HEATER RADIATOR**
2. **INSTALL HEATER AIR DUCT**
3. **INSTALL AIR OUTLET DAMPER CONTROL SERVOMOTOR**

(a) Insert the bush of the air outlet damper control servomotor to the lever.

(b) Install the air outlet damper control servomoter with the 2 screws.

AC161-03

HEATER UNIT INSTALLATION

1. **INSTALL HEATER UNIT**

Install by following the removal procedure in reverse order.

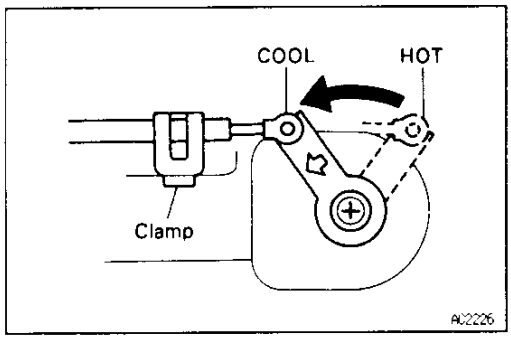

2. **CONNECT WATER VALVE CONTROL CABLE**

(a) Set the TEMP switch to Max Cool.

(b) Set the water valve lever on Max Cool, connect the water valve control cable and lock the clamp.

3. **INSTALL COOLING UNIT**

(See page AC−33)

HINT:

- When the water valve control cable is installed, evacuate the air in the system and charge system with refrigerant.

Specified amount:

650 ± 50 g (22.92 ± 1.76 oz.)

- After operations are completed, check for leakage of refrigerant and check the operation of the A/C.

4. **REFILL WITH ENGINE COOLANT**
5. **CONNECT NEGATIVE (−) TERMINAL CABLE FROM BATTERY**
6. **INSPECT A/C OPERATION**

AC

Downloaded from www.Manualslib.com manuals search engine

BLOWER UNIT

AC183-02

BLOWER UNIT REMOVAL

1. REMOVE COOLING UNIT
(See page AC–13)

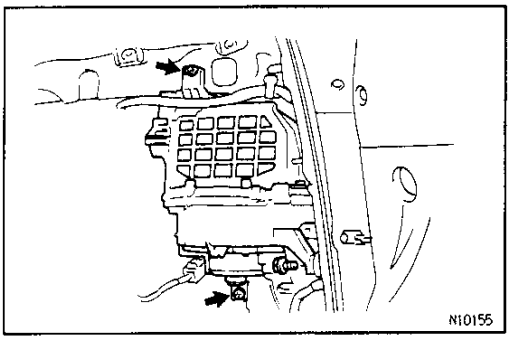

2. REMOVE BLOWER UNIT

(a) Disconnect the connector from the blower motor.
(b) Disconnect the connector from the air inlet damper control servomotor.
(c) Remove wire harness.
(d) Remove the 2 nuts, a bolt and the blower unit.

AC

Downloaded from www.Manualslib.com manuals search engine

AC165-01

BLOWER UNIT DISASSEMBLY

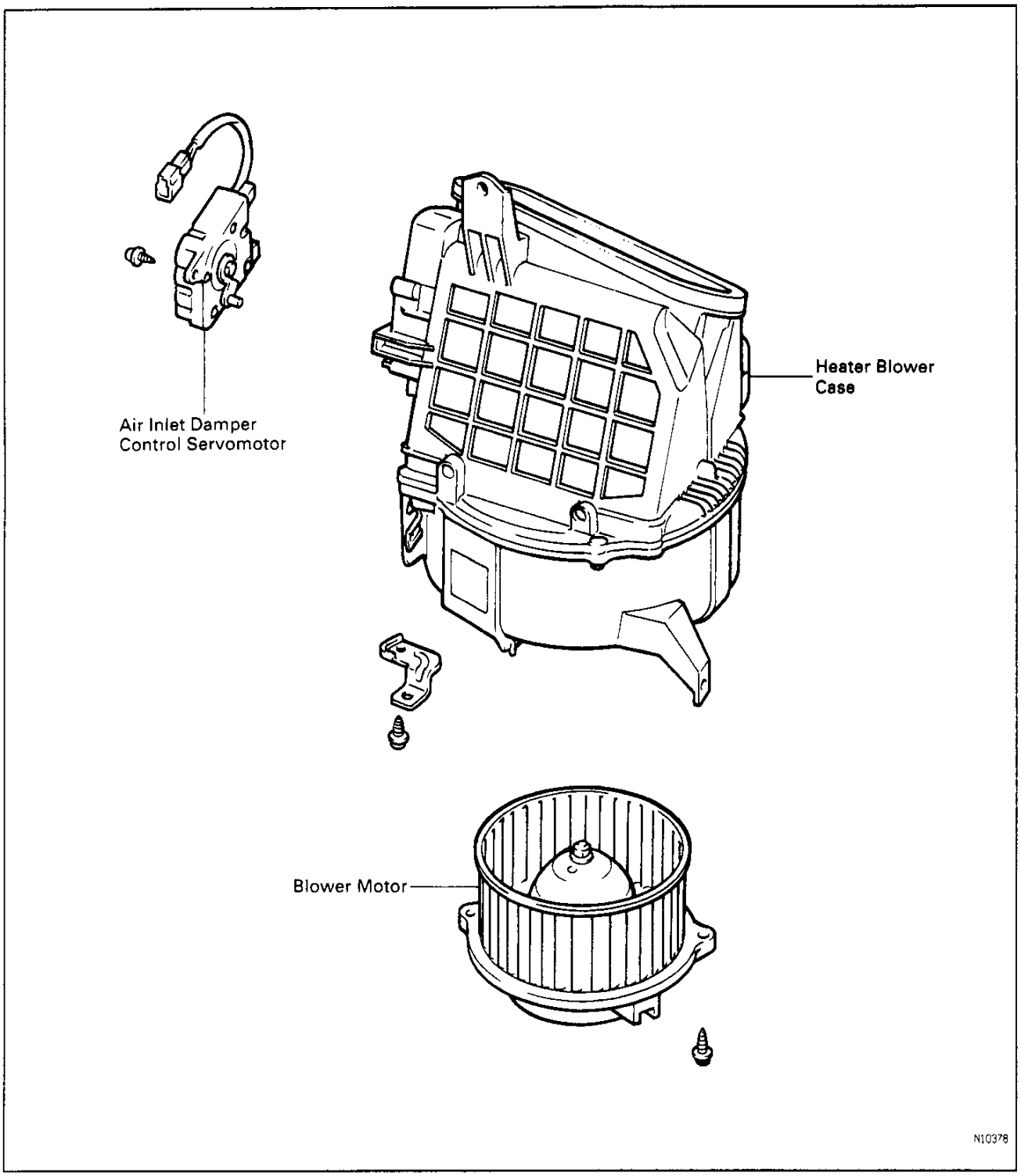

Downloaded from www.Manualslib.com manuals search engine

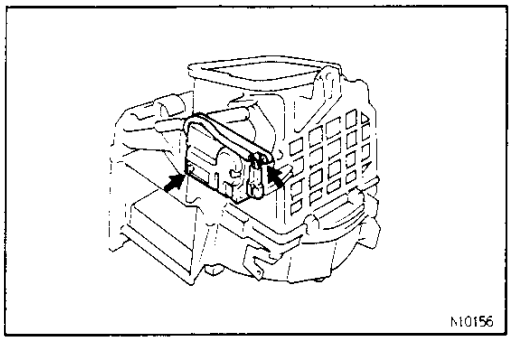

1. **REMOVE AIR INLET DAMPER CONTROL SERVO-MOTOR**
   Remove the 2 screws and the air inlet damper control servomotor.

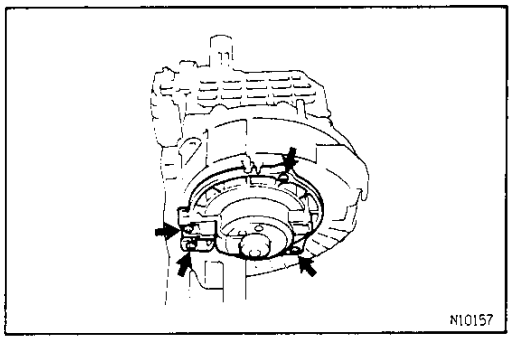

2. **REMOVE BLOWER MOTOR**
   (a) Remove the screw and wire harness clamp.
   (b) Remove the 3 screws and the blower motor.

BLOWER UNIT ASSEMBLY

AC164-01

Assemble by following the disassembly procedure in reverse order.

AC

BLOWER UNIT INSTALLATION

AC165-01

1. **INSTALL BLOWER UNIT**
   Install by following the removal procedure in reverse order.
2. **INSTALL COOLING UNIT**
   (See page AC–33)

Downloaded from www.Manualslib.com manuals search engine

COMPRESSOR

AC16Y-02

ON–VEHICLE INSPECTION

Magnetic Clutch:

1. **MAKE FOLLOWING VISUAL CHECKS**
   - Leakage of grease from the clutch bearing.
   - Signs of oil on the pressure plate or rotor.

   Repair or replace, as necessary.

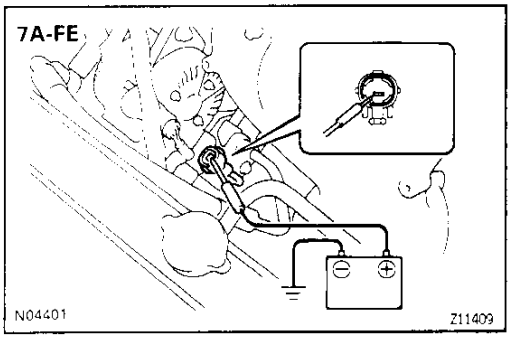

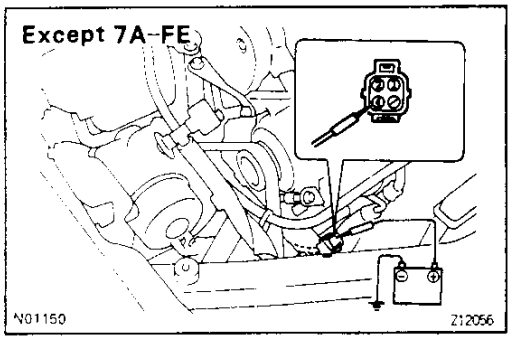

2. **INSPECT MAGNETIC CLUTCH BEARING FOR NOISE**

(a) Start engine.

(b) Check for abnormal noise from near the compressor when the A/C switch is OFF.
If abnomal noise is being emitted, replace the magnetic clutch.

3. **INSPECT MAGNETIC CLUTCH**

(a) Disconnect the connector from the magnetic clutch.

(b) Connect the positive (+) lead from the battery to the terminal on the magnetic clutch connector and the negative (–) lead to the body ground.

(c) Check that the magnetic clutch is energized.
If operation is not as specified, replace the magnetic clutch.

Compressor:

1. **INSTALL MANIFOLD GAUGE SET**
   (See page AC–15)
2. **START ENGINE**
3. **INSPECT COMPRESSOR FOR METALLIC SOUND**
   Check if there is a metallic sound from the compressor when the A/C switch is ON.
   If metallic sound is heard, replace the compressor assembly.
4. **INSPECT PRESSURE OF REFRIGERATION SYSTEM**
   See "Refrigerant System Inspection with Manifold Gauge Set" on page AC–20.
5. **STOP ENGINE**
6. **INSPECT VISUALLY FOR LEAKAGE OF REFRIGERANT FROM SAFETY SEAL**
   If there is any leakage, replace the compressor assembly.

Downloaded from www.Manualslib.com manuals search engine

AC19M-01

COMPRESSOR REMOVAL

7A-FE Engine

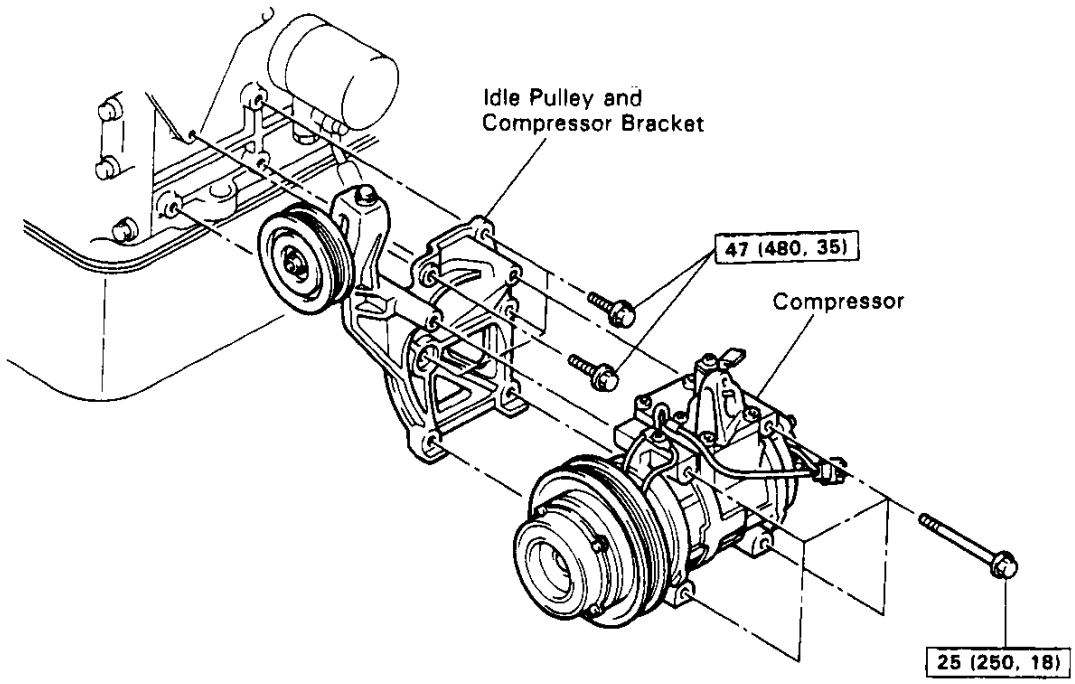

N·m (kgf·cm, ft·lbf) : Specified torque

N04446

Z12149

AC

Downloaded from www.Manualslib.com manuals search engine

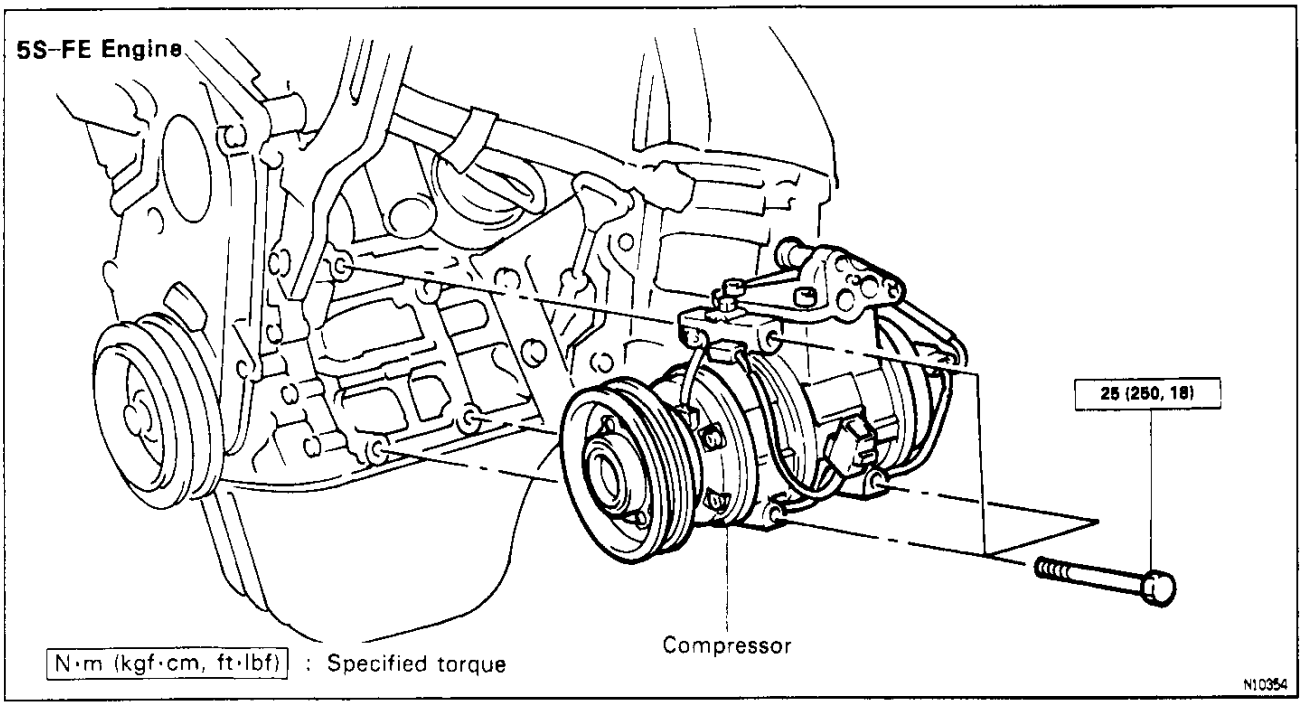

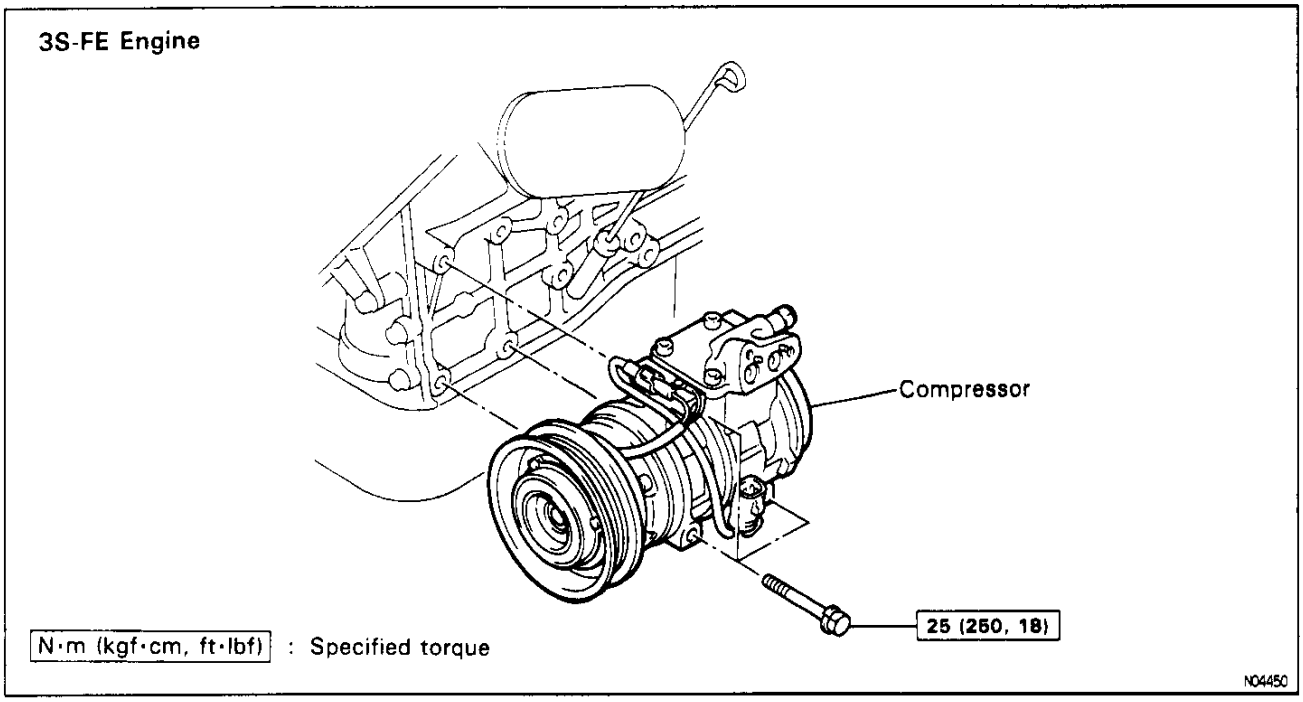

Downloaded from www.Manualslib.com manuals search engine

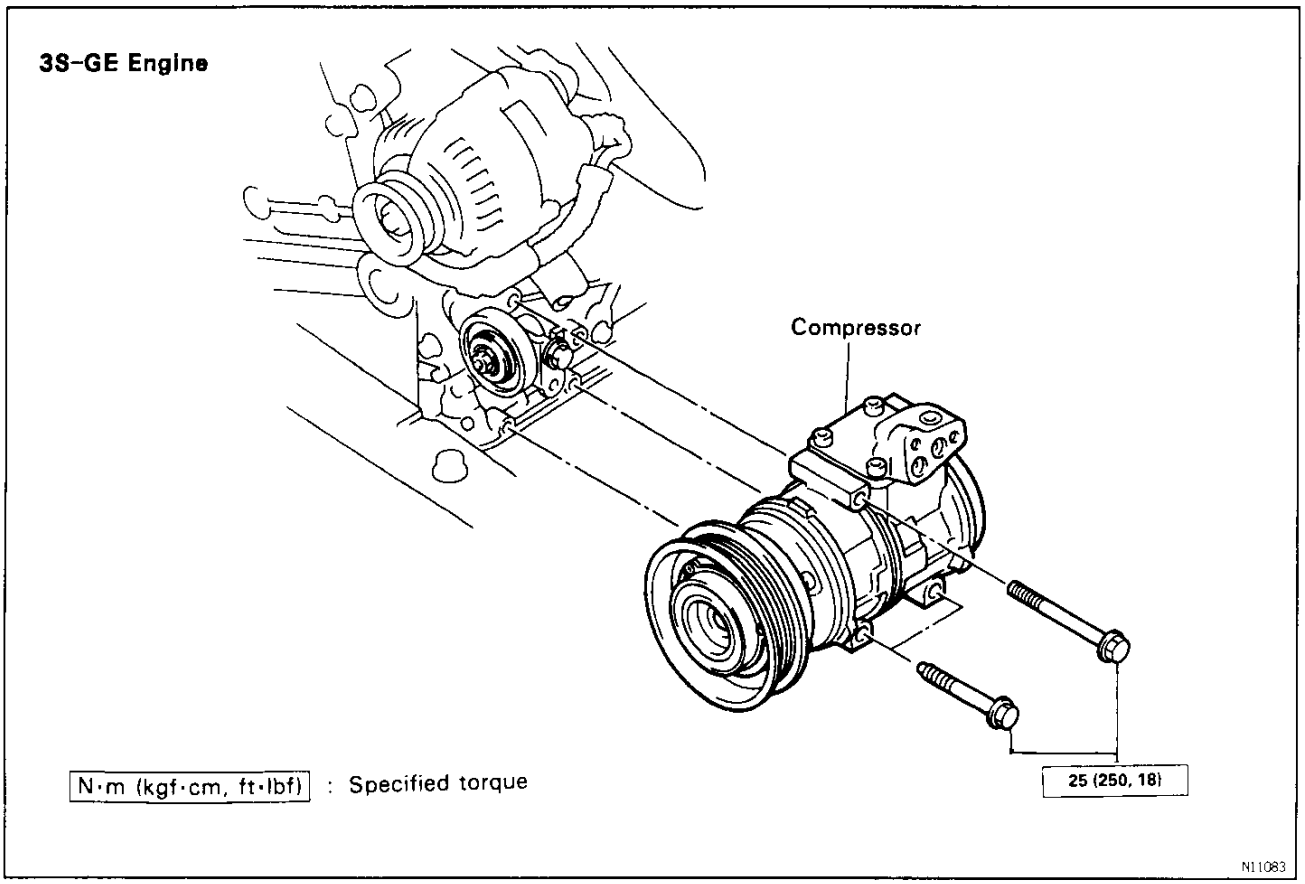

AC

1. **RUN ENGINE AT IDLE SPEED WITH A/C ON FOR APPROX. 10 MINUTES**
2. **STOP ENGINE**
3. **DISCONNECT NEGATIVE (−) TERMINAL CABLE FROM BATTERY**
   CAUTION: Work must be started after 90 seconds from the time the ignition switch is turned to the "LOCK" position and the negative (−) terminal cable is disconnected from the battery.
4. **DISCHARGE REFRIGERANT FROM REFRIGERATION SYSTEM**
   (See page AC−15)

Downloaded from www.Manualslib.com manuals search engine

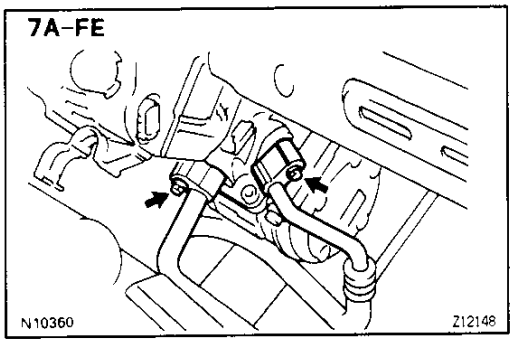

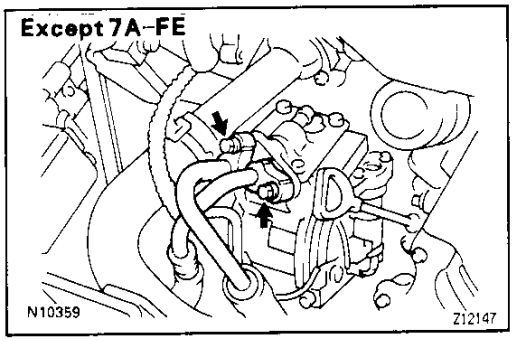

5. DISCONNECT DISCHARGE HOSE AND SUCTION HOSE FROM COMPRESSOR

6. REMOVE ENGINE UNDER COVER

7. REMOVE COMPRESSOR

(a) Loosen drive belt.

(b) 7A–FE Engine:
Remove the 4 bolts and compressor.
Ex. 7A–FE Engine:
Remove the 3 bolts and compressor.

Downloaded from www.Manualslib.com manuals search engine

ACOPS-06

MAGNETIC CLUTCH DISASSEMBLY

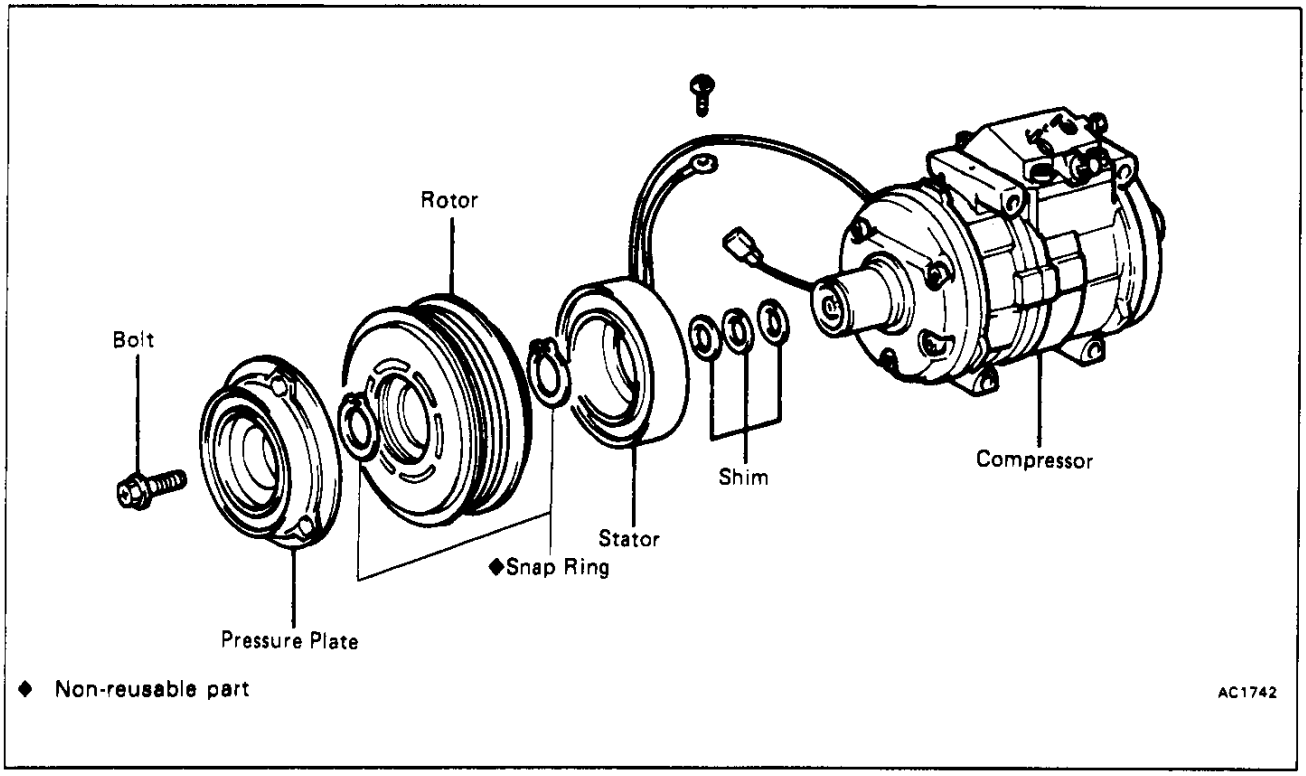

AC

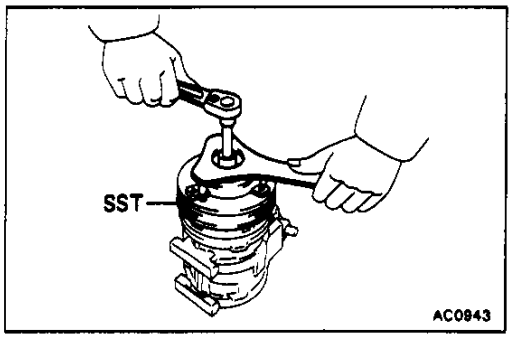

1. **REMOVE PRESSURE PLATE**

(a) Using SST and socket wrench, remove the shaft bolt.
SST 07112–76060

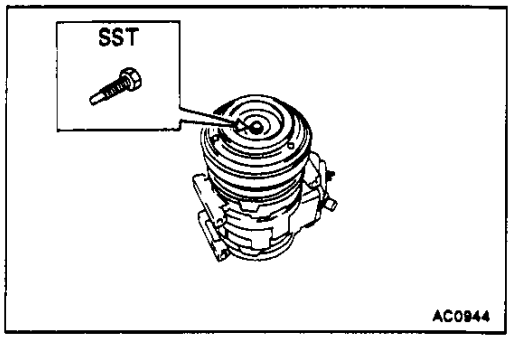

(b) Install SST on the pressure plate.
SST 07112–66040

Downloaded from www.Manualslib.com manuals search engine

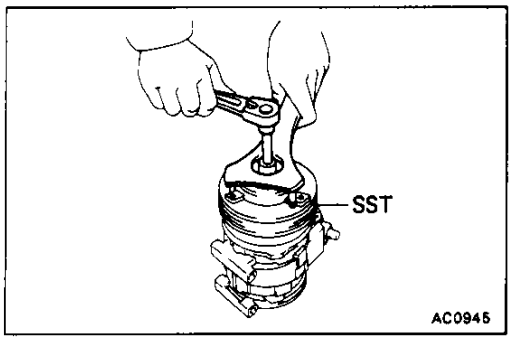

(c) Using SST and socket wrench, remove the pressure plate.
SST 07112–76060

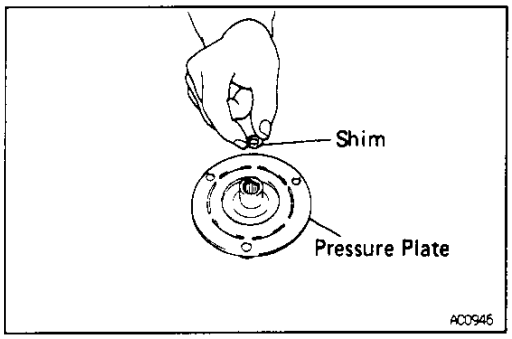

(d) Remove the shims from the pressure plate.

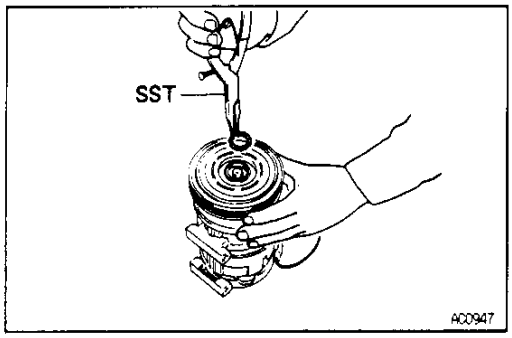

2. REMOVE ROTOR

(a) Using SST, remove the snap ring.
SST 07114–84020

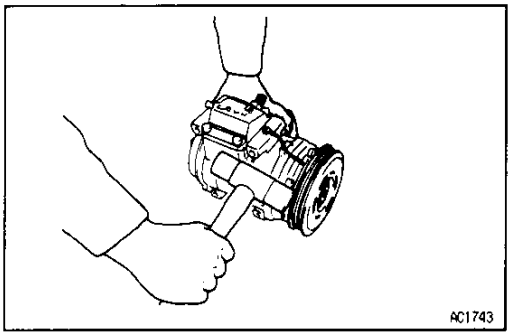

(b) Using a plastic hammer, tap the rotor off the shaft.
NOTICE: Be careful not to damage the pulley when tapping on the rotor.

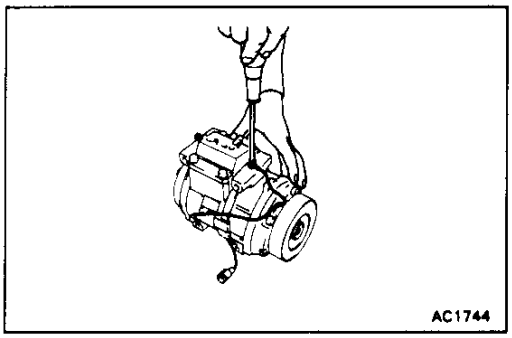

3. REMOVE STATOR

(a) Disconnect the stator lead wire from the compressor housing.

Downloaded from www.Manualslib.com manuals search engine

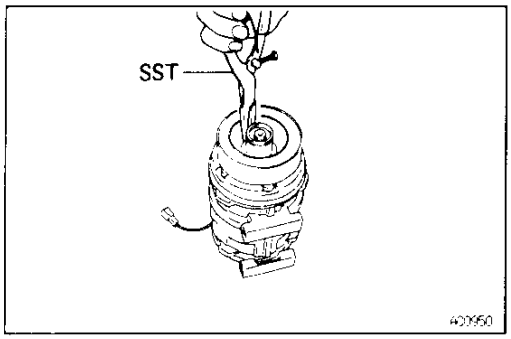

(b) Using SST, remove the snap ring.
SST 07114–84020

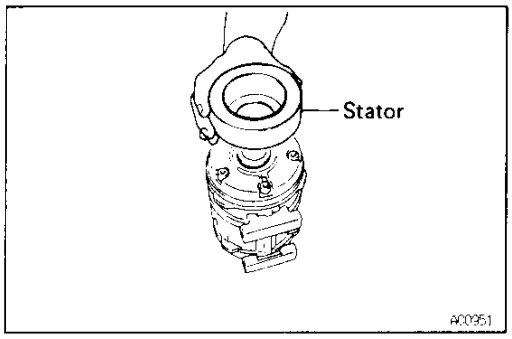

(c) Remove the stator.

AC058–04

SHAFT SEAL REPLACEMENT

AC

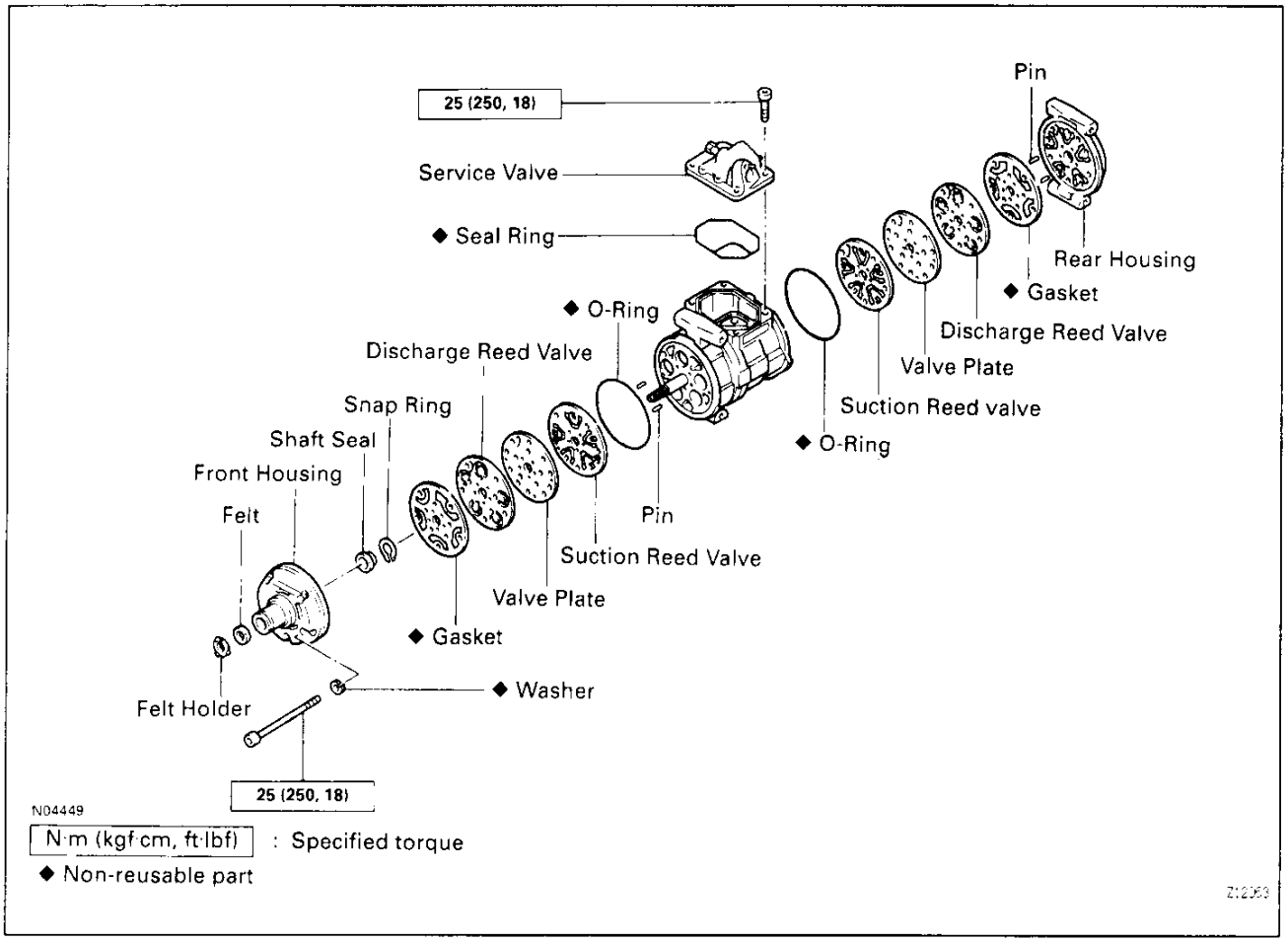

Downloaded from www.Manualslib.com manuals search engine

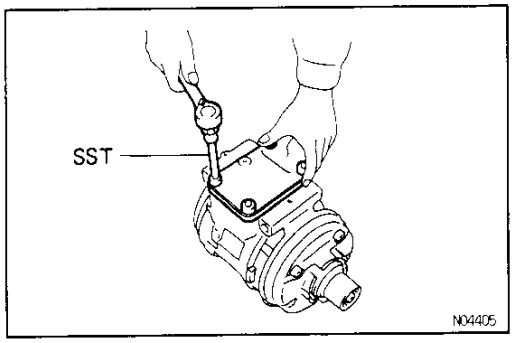

1. REMOVE SERVICE VALVE

(a) Using SST, remove four bolts holding the service valve.
SST 07110–61050

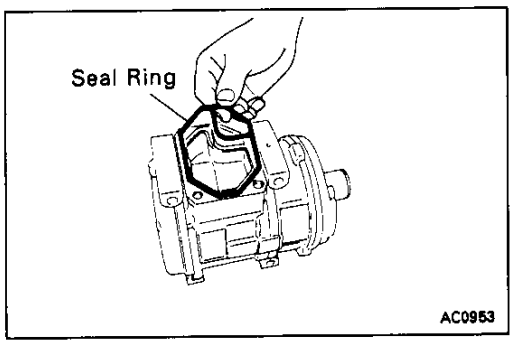

(b) Remove the seal ring from the cylinder block.
Discard the seal ring.

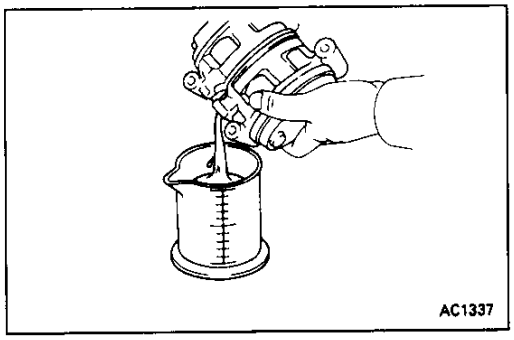

2. DRAIN COMPRESSOR OIL INTO MEASURING FLASK

Measure the quantity of drained oil because the same amount should be replaced later.

AC

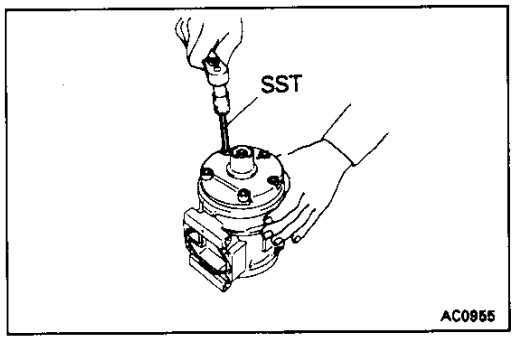

3. REMOVE FRONT HOUSING

(a) Using SST, remove 5 through bolts.
NOTICE: Do not reuse 5 washers.
SST 07110–61050

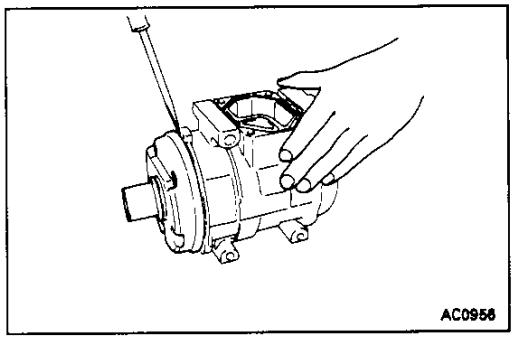

(b) Using a screwdriver, remove the front housing.
NOTICE: Be careful not to scratch the sealing surface of the front housing.

Downloaded from www.Manualslib.com manuals search engine

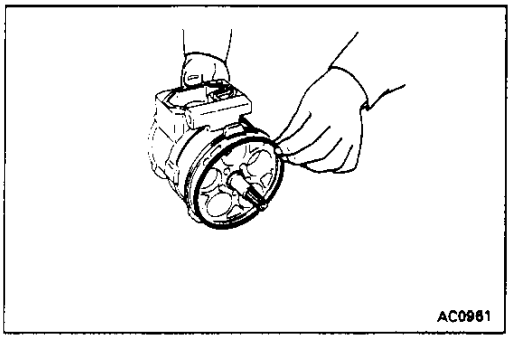

(c) Remove the front O–ring.
Discard the O–ring.

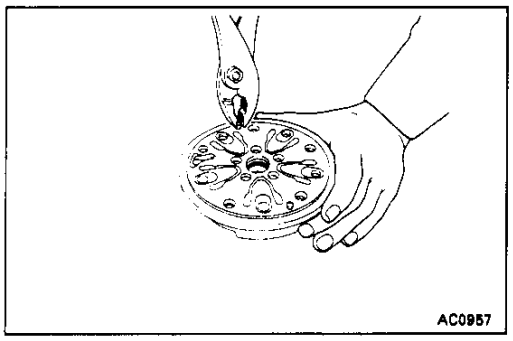

(d) Remove the 2 pins.

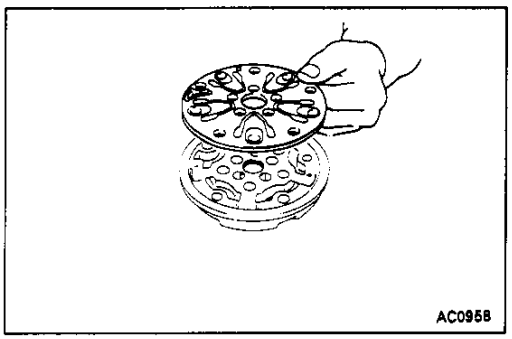

(e) Remove front valve plate with reed valves.

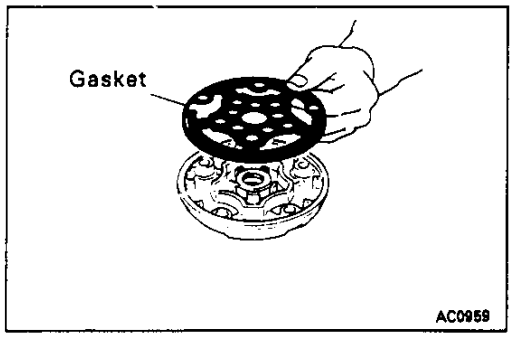

(f) Remove and discard the gasket.

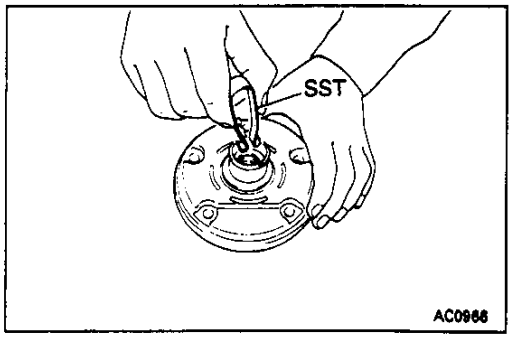

4. REMOVE FELT

(a) Set SST on the felt.
SST 07112–15020

Downloaded from www.Manualslib.com manuals search engine

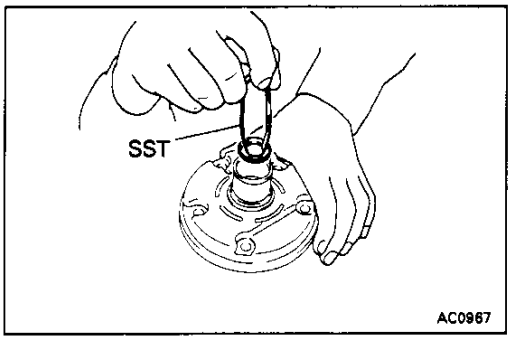

(b) Pull the felt with felt holder out of front housing.
SST 07112–15020

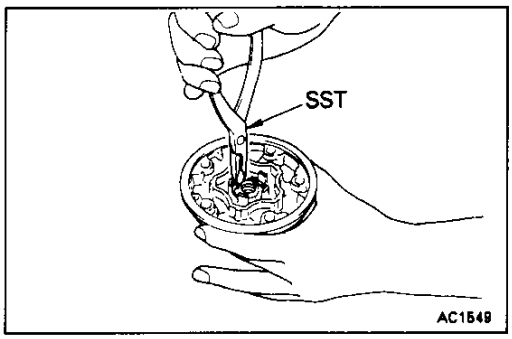

5. REMOVE SHAFT SEAL

(a) Using SST, remove the snap ring from the front housing.
SST 07114–84010

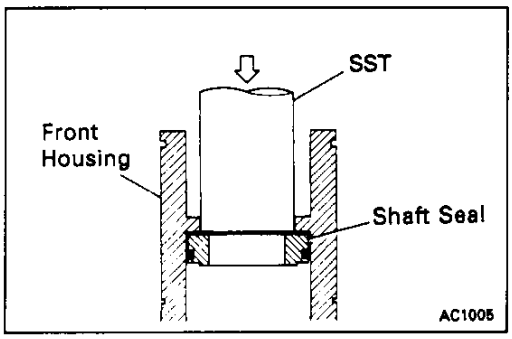

(b) Set SST on the shaft seal.
SST 07112–85030

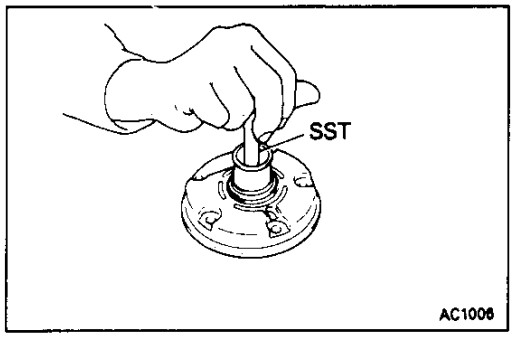

(c) Using SST, put the shaft seal out of the front housing.
SST 07112–85030

(d) Remove the O–ring from the shaft seal.
Discard the O–ring.

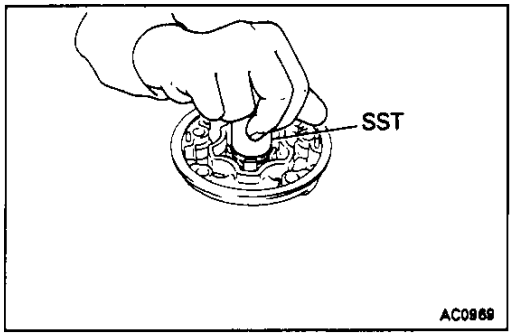

6. INSTALL SHAFT SEAL

(a) Install a new O–ring to shaft seal.

(b) Fit shaft seal on SST, and install the shaft seal into the front housing.
SST 07112–85020
HINT: Clean up the surface of the shaft seal with compressor oil.

AC

Downloaded from www.Manualslib.com manuals search engine

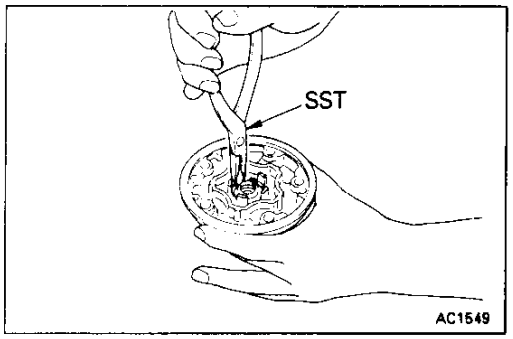

(b) Using SST, install the snap ring into the front housing.
SST 07114–84010

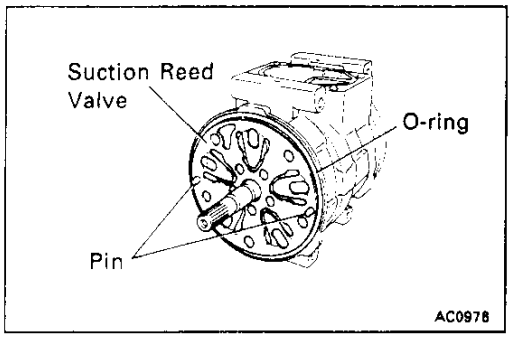

7. INSTALL FRONT HOUSING

(a) Install 2 pins in the front cylinder.

(b) Lubricate a new O–ring with compressor oil and install it in the front housing.

(c) Install the front suction reed valve over the pins on the front cylinder.

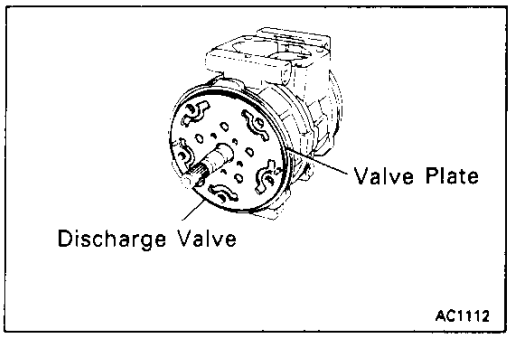

(d) Install the front valve plate with the discharge reed valve over the pins on the front cylinder.
HINT: The front valve plate is marked with an "F".

AC

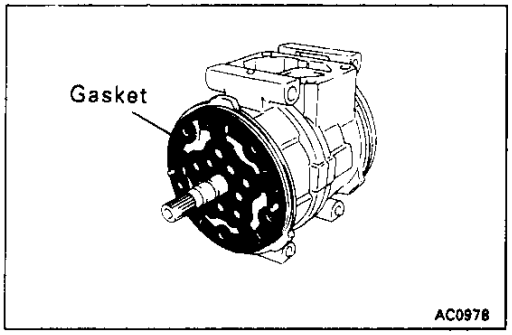

(e) Lubricate a new gasket with compressor oil and install the gasket on the valve plate.

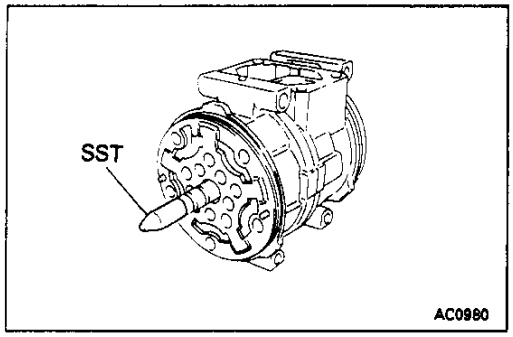

(f) Set SST on the shaft to protect the lip seal.
SST 07112–85010

Downloaded from www.Manualslib.com manuals search engine

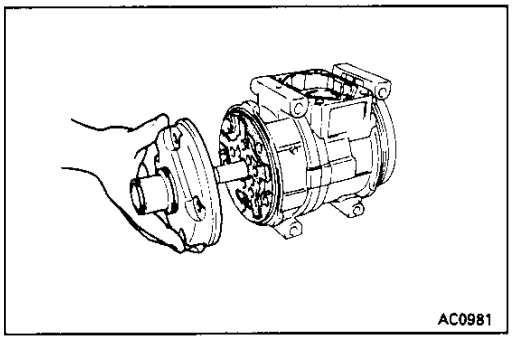

(g) Install the front housing on the front cylinder.

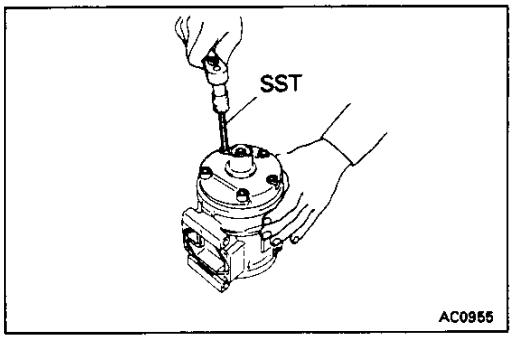

8. TIGHTEN 5 THROUGH BOLTS

Using SST and torque wrench, gradually tighten the 5 through bolts in 2 or 3 passes.

SST 07110−61050

Torque: 25 N·m (250 kgf·cm, 18 ft·lbf)

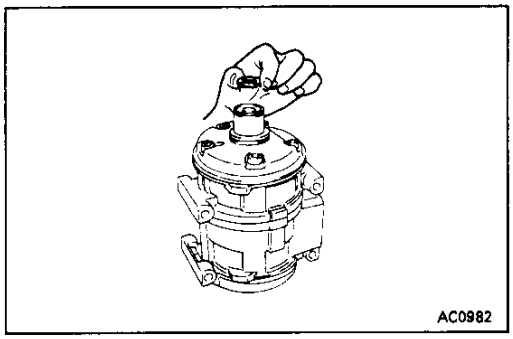

9. INSTALL FELT

(a) Set the felt with felt holder to the front housing.

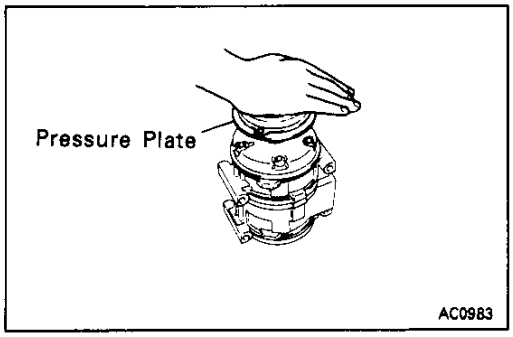

(b) Using pressure plate of magnetic clutch, install the felt.

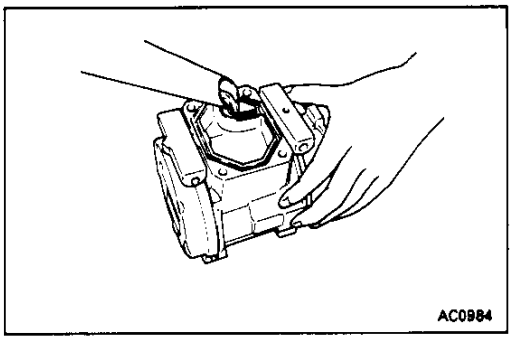

10. POUR COMPRESSOR OIL INTO COMPRESSOR

Add the same quantity of oil as was remove, plus 20 cc (0.7 fl.oz), into the compressor.

Compressor oil:

ND OIL 8 or equivalent

Downloaded from www.Manualslib.com manuals search engine

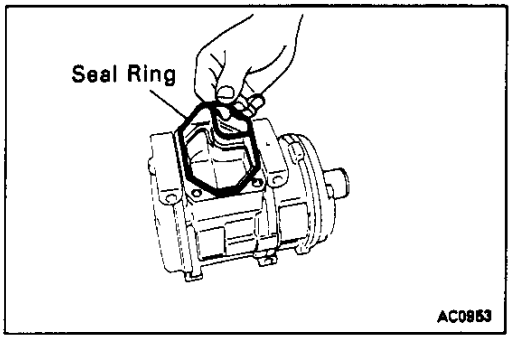

11. INSTALL SERVICE VALVE

(a) Lubricate new seal ring with compressor oil. Install the seal ring in the service valve.

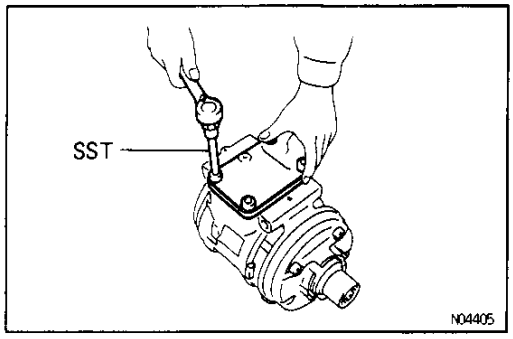

(b) Install the service valve on the compressor. Using SST and torque wrench, tighten the bolts.
SST 07110–61050
Torque: 25 N·m (250 kgf·cm, 18 ft·lbf)

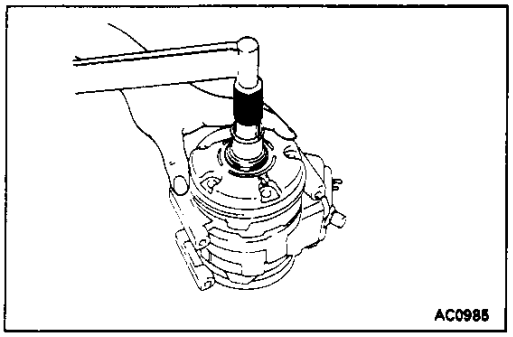

12. CHECK SHAFT STARTING TORQUE
Torque: 2.9 N·m (30 kgf·cm, 26 in.·lbf) or less

AC

MAGNETIC CLUTCH ASSEMBLY

AC171-02

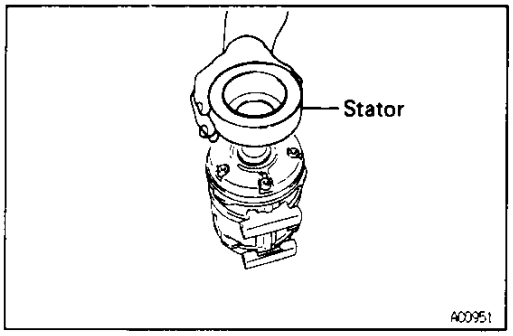

1. INSTALL STATOR

(a) Install the stator on the compressor.

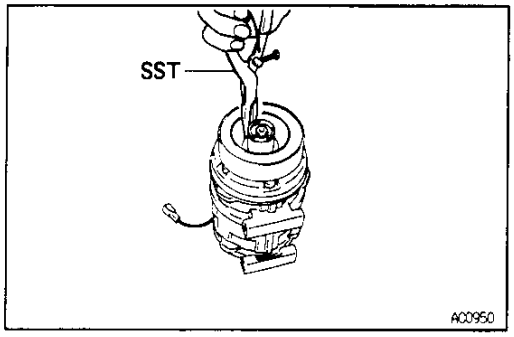

(b) Using SST, install a new snap ring.
SST 07114–84020

Downloaded from www.Manualslib.com manuals search engine

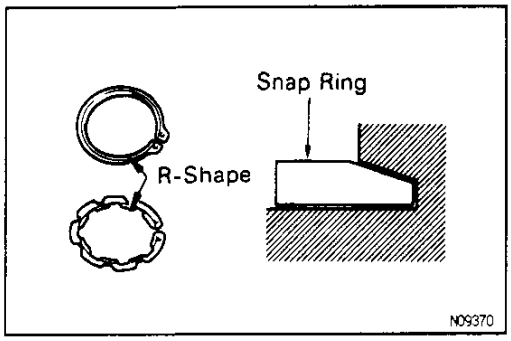

NOTICE: The snap ring should be installed so that its beveled side faces up.

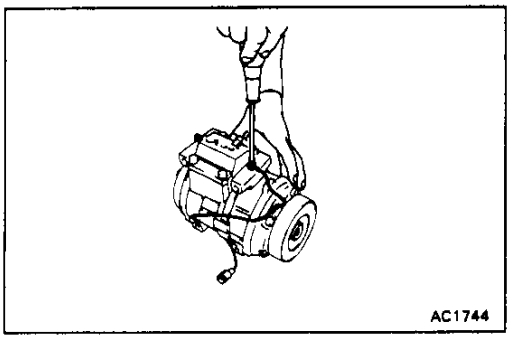

(c) Connect the stator lead wire to the compressor housing.

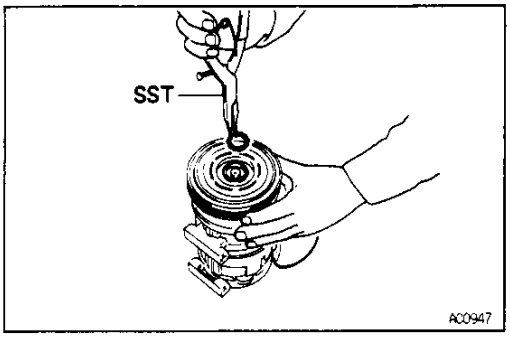

2. INSTALL ROTOR

(a) Install the rotor on the compressor shaft.

(b) Using SST, install a new snap ring.
SST 07114–84020

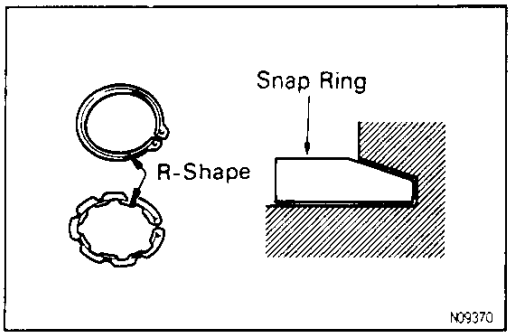

NOTICE: The snap ring should be installed so that its beveled side faces up.

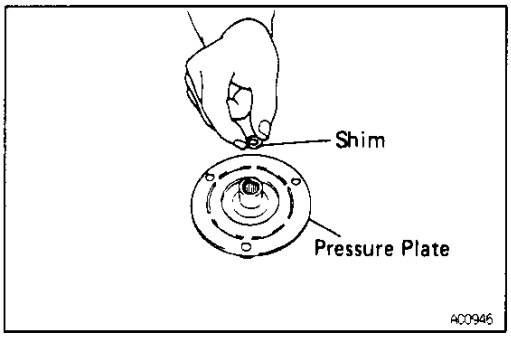

3. INSTALL PRESSURE PLATE

(a) Put the shims to the pressure plate.

Downloaded from www.Manualslib.com manuals search engine

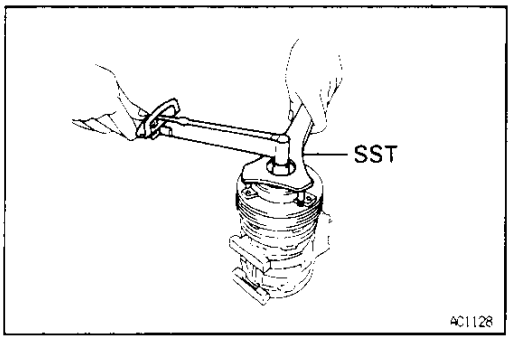

(b) Using SST and torque wrench, install the shaft bolt.
SST 07112–76060
Torque: 14 N·m (140 kgf·cm, 10 ft·lbf)

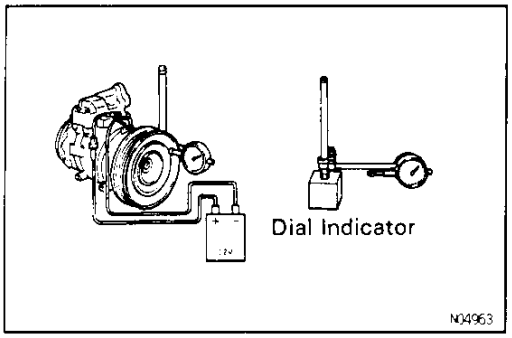

4. CHECK CLEARANCE OF MAGNETIC CLUTCH

(a) Set the dial indicator to the pressure plate of the magnetic clutch.

(b) Connect the magnetic clutch lead wire to the positive (+) terminal of the battery.

(c) Check the clearance between the pressure plate and rotor, then connect the negative (–) terminal of the battery.

Standard clearance:

0.5 ± 0.15 mm (0.020 ± 0.0059 in.)

If the clearance is not within standard clearance, adjust the clearance using shims to obtain the standard clearance.

Shim thickness:

0.1 mm (0.004 in.)
0.3 mm (0.012 in.)
0.5 mm (0.020 in.)

AC

Downloaded from www.Manualslib.com manuals search engine

AC19N-01

COMPRESSOR INSTALLATION

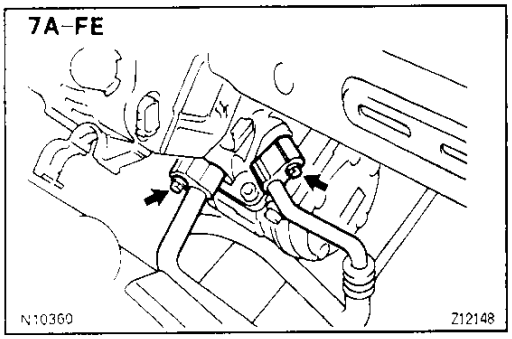

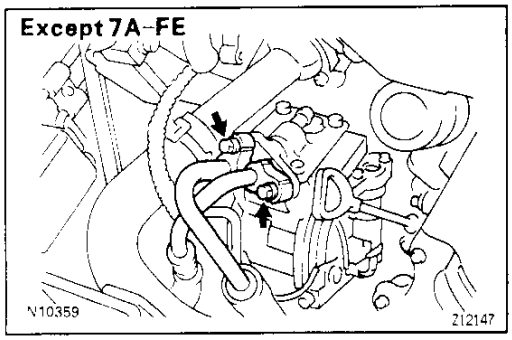

1. **INSTALL COMPRESSOR**
   7A–FE Engine:
   Install compressor with the 4 bolts.
   Torque: 25 N·m (250 kgf·cm, 18 ft·lbf)
   Ex. 7A–FE Engine:
   Install compressor with the 3 bolts.
   Torque: 25 N·m (250 kgf·cm, 18 ft·lbf)
2. **INSTALL DRIVE BELT**
3. **INSPECT DRIVE BELT TENSION**
   (See page AC–26)
4. **INSTALL ENGINE UNDER COVER**
5. **CONNECT DISCHARGE HOSE AND SUCTION HOSE TO COMPRESSOR**
   NOTICE: Hoses should be connected immediately after the caps have been removed.
   Torque: 10 N·m (100 kgf·cm, 7 ft·lbf)
6. **CONNECT CONNECTOR TO MAGNETIC CLUTCH**
7. **EVACUATE AIR IN REFRIGERATION SYSTEM AND CHARGE WITH REFRIGERANT**
   Specified amount:
   650 ± 50 g (22.92 ± 1.76 oz.)
8. **INSPECT FOR LEAKAGE OF REFRIGERANT**
   Using a gas leak tester, check for leakage of refrigerant.
   If there is leakage, check the tightening torque at the joints.
9. **CONNECT NEGATIVE (–) TERMINAL CABLE TO BATTERY**
10. **INSPECT A/C OPERATION**

Downloaded from www.Manualslib.com manuals search engine

RECEIVER

AC173-01

ON—VEHICLE INSPECTION

INSPECT FITTING FOR LEAKAGE

Using a gas leak tester, check for leakage.
If there is leakage, check the tightening torque at the joints.

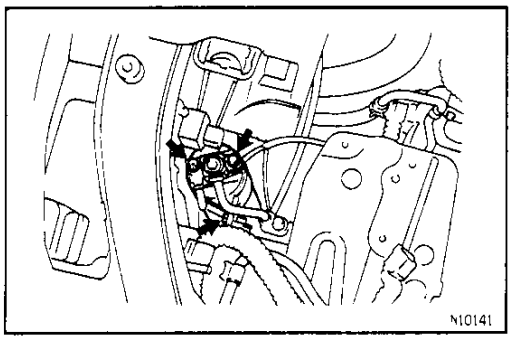

AC174-01

RECEIVER REMOVAL

1. **DISCHARGE REFRIGERANT FROM REFRIGERATION SYSTEM**
2. **REMOVE BATTERY**
   CAUTION: Work must be started after 90 seconds from the time the ignition switch is turned to the "LOCK" position and the negative (—) terminal cable is disconnected from the battery.
3. **REMOVE ENGINE COOLANT RESERVOIR TANK**
4. **REMOVE RECEIVER**

(a) Remove the 2 bolts and both tubes from the receiver.
(b) Remove the bolt, then remove the receiver from the receiver holder.
NOTICE: Cap the open fittings immediately to keeps moisture out of the system.

AC

Downloaded from www.Manualslib.com manuals search engine

AC178-02

RECEIVER INSTALLATION

1. **INSTALL RECEIVER INTO RECEIVER HOLDER**
   Install the receiver into the receiver holder with the bolt.
2. **INSTALL 2 LIQUID TUBES TO RECEIVER**
   Install 2 liquid tubes to the receiver with 2 bolts.
   Torque: 5.4 N·m (55 kgf·cm, 48 in.·lbf)
   NOTICE: Do not remove the caps until the tubes are connected.
3. **INSTALL COOLANT RESERVOIR TANK**
4. **INSTALL BATTERY**
5. **IF RECEIVER WAS REPLACED, ADD COMPRESSOR OIL TO COMPRESSOR**
   Add 10cc (2.9 fl.oz.)
   Compressor oil:
   ND OIL 8 or equivalent
6. **EVACUATE AIR IN REFRIGERATION SYSTEM AND CHAGE WITH REFRIGERANT**
   Specified amount:
   650 ± 50 g (22.92 ± 1.76 oz.)
7. **INSPECT FOR LEAKAGE OF REFRIGERANT**
   Using a gas lake tester, check for leakage of refrigerant.
   If there is leakage, check the tightening torque at the joints.
8. **INSPECT A/C OPERATION**

Downloaded from www.Manualslib.com manuals search engine

CONDENSER

AC178-01

ON-VEHICLE INSPECTION

1. **INSPECT CONDENSER FINS FOR BLOCKAGE OR DAMAGE**
   If the fins are clogged, wash them with water and dry with compressed air.
   NOTICE: Be careful not to damage the fins.
   If the fins are bent, straighten them with a screwdriver or pliers.
2. **INSPECT CONDENSER AND FITTINGS FOR LEAKAGE**
   Using a gas leak tester, check for leakage.
   If there is leakage, check the tightening torque at the joints.

AC

AC19P-01

CONDENSER REMOVAL

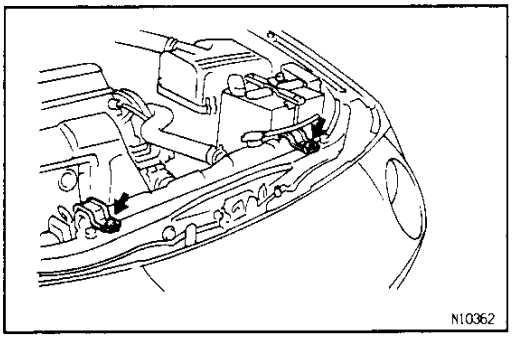

1. **DISCHARGE REFRIGERANT FROM REFRIGERATION SYSTEM**
   (See page AC-15)
2. **REMOVE RADIATOR UPPER MOUNTINGS**
   Remove the 2 bolts and the 2 upper mountings.

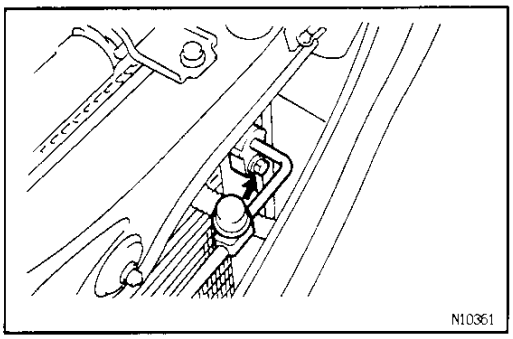

3. **REMOVE 2 TUBES**
   Remove 2 bolts and 2 tubes.
   NOTICE: Cap the open fittings immediately to keep moisture out of the system.

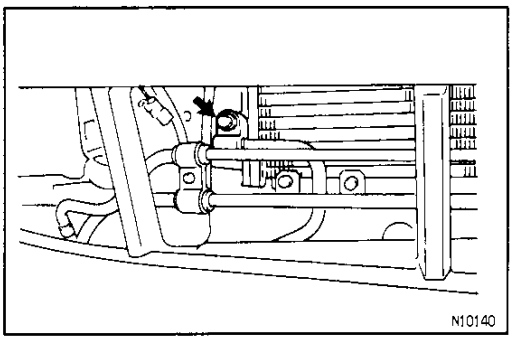

Downloaded from www.Manualslib.com manuals search engine

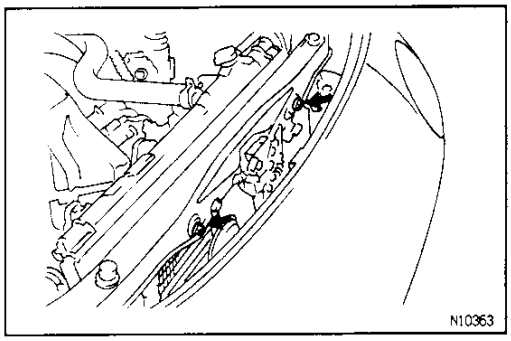

4. REMOVE CONDENSER

(a) Remove the 2 nuts from condenser upper mounting.

(b) Push the radiator to engine side.

(c) Push the condenser to radiator side and pull it upward.

AC178-02

CONDENSER INSTALLATION

1. INSTALL CONDENSER

Install the condenser with 2 brackets and 2 nuts.

2. INSTALL LIQUID TUBES

Install both tubes with 2 bolts.

Torque: 9.8 N·m (100 kgf·cm, 7 ft·lbf)

NOTICE: Do not remove caps until the tube is installed.

3. INSTALL UPPER SUPPORT

Install the 2 bolts and 2 upper supports.

4. REPLENISH COMPRESSOR OIL IF CONDENSER HAS BEEN REPLACED

Add 40cc (1.4 fl.oz.)

Compressor oil:

ND OIL 8 or equivalent

5. EVACUATE AIR IN REFRIGERATION SYSTEM AND CHARGE WITH REFRIGERATION

Specified amount:

650 ± 50 g (22.92 ± 1.76 oz.)

6. INSPECT FOR LEAKAGE OF REFRIGERANT

Using a gas leak tester, check for leakage of refrigerant.

AC

Downloaded from www.Manualslib.com manuals search engine

EVAPORATOR

EVAPORATOR INSPECTION

AC179-01

1. **CHECK EVAPORATOR FINS FOR BLOCKAGE**
   If the fins are clogged, clean them with compressed air.
   NOTICE: Never use water to clean the evaporator.
2. **CHEAK FITTINGS FOR CRACKS OR SCRATCHES**
   Repair as necessary.

EVAPORATOR REMOVAL AND INSTALLATION

AC17A-01

(See page AC–32)

HEATER RADIATOR

HEATER RADIATOR REMOVAL

AC16E-01

1. **REMOVE HEATER UNIT**
   (See page AC–34)
2. **REMOVE AIR DUCT**
   (See page AC–35)
3. **REMOVE HEATER RADIATOR**
   (See page AC–35)

AC

HEATER RADIATOR INSPECTION

AC16F-01

INSPECT FINS FOR BLOCKAGE
If the fins are clogged, clean them with compressed air.

HEATER RADIATOR INSTALLATION

AC16G-01

1. **INSTALL HEATER RADIATOR**
   (See page AC–37)
2. **INSTALL AIR DUCT**
   (See page AC–37)
3. **INSTALL HEATER UNIT**
   (See page AC–37)

Downloaded from www.Manualslib.com manuals search engine

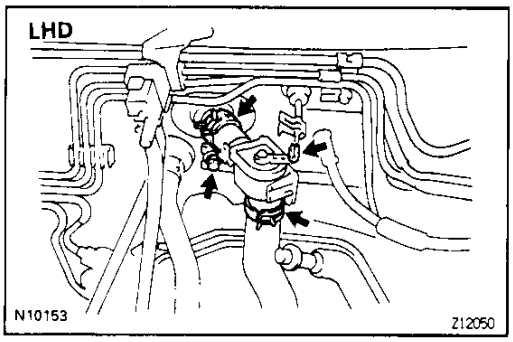

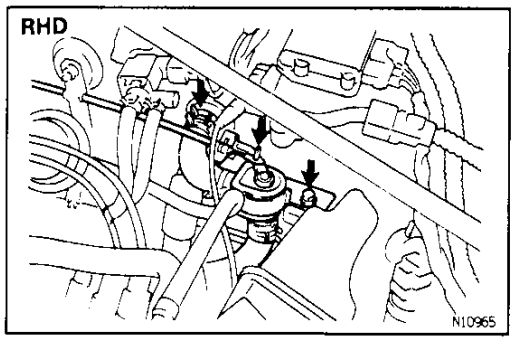

WATER VALVE

WATER VALVE REMOVAL

AC18G-01

1. **DRAIN ENGINE COOLANT FROM RADIATOR**
   HINT: It is not necessary to drain out all the coolant.
2. **REMOVE WATER VALVE**
   (a) Disconnect the water valve control cable.
   (b) Disconnect the water hose from the heater radiator pipe.
   (c) Disconnect the water hose from the water valve.
   (d) Remove the bolt and the water valve.

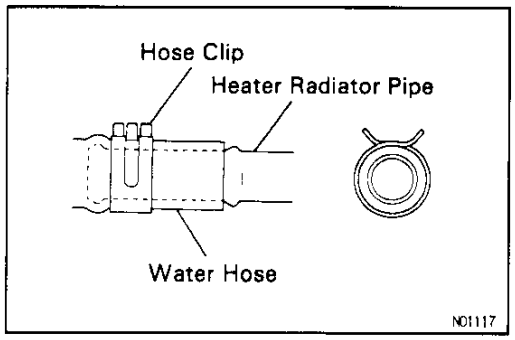

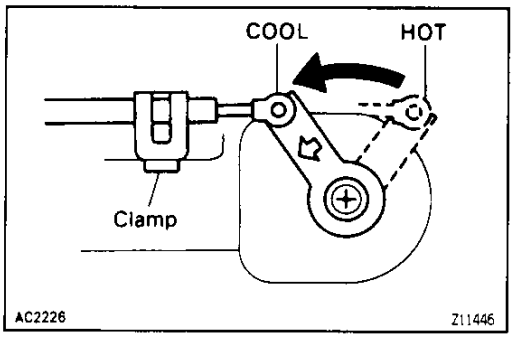

WATER VALVE INSTALLATION

AC27A-01

1. **INSTALL WATER VALVE**
   (a) Push the water hose onto the heater radiator pipe as far as the ridge on the pipe and install the hose clip.
   (b) Install water valve with the bolt.
2. **CONNECT HEATER HOSE TO WATER VALVE**
3. **CONNECT WATER VALVE CONTROL CABLE TO WATER VALVE**
   (a) Set the temperature control switch to "COOL".
   (b) Set the water valve lever to "COOL", install the control cable and lock the clamp.
   HINT: Lock the clamp while lightly pushing the outer cable in the direction shown by the arrow.

AC

Downloaded from www.Manualslib.com manuals search engine

EXPANSION VALVE

AC17B-01

ON–VEHICLE INSPECTION

1. **CHECK QUANTITY OF GAS DURING REFRIGERATION CYCLE**
2. **INSTALL MANIFOLD GAUGE SET**
3. **RUN ENGINE**
   Run the engine at 1,500 rpm for at least 5 minutes. Then check that the high pressuer is 1.37 – 1.53 MPa (14 – 16 kg/cm², 199 – 228 psi).
4. **CHECK EXPANSION VALVE**
   If the expansion valve is faulty, the low pressure reading will drop to 0 kPa (0 kg/cm², 0 psi).
   HINT: When the low pressure drops to 0 kPa (0 kg/cm², 0 psi), feel the receiver's IN and OUT sides for no temperature difference.

AC

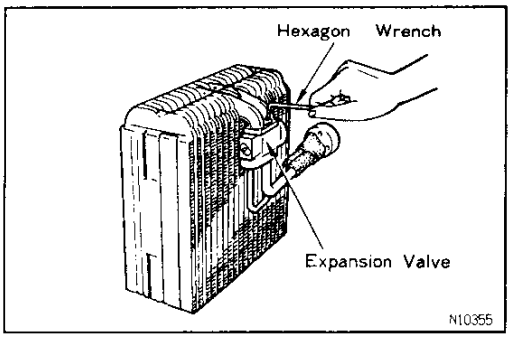

AC17C-01

EXPANSION VALVE REMOVAL

1. **REMOVE EVAPORATOR**
   (See paga AC–32)
2. **REMOVE EXPANSION VALVE**
   (See page AC–33)

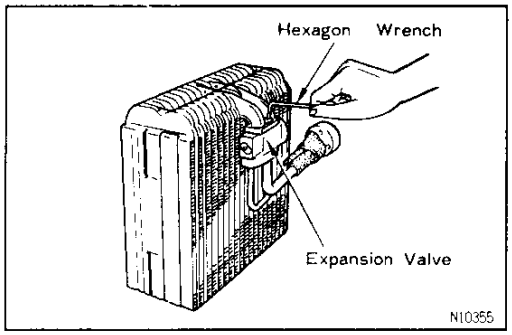

AC17D-01

EXPANSION VALVE INSTALLATION

1. **INSTALL EXPANSION VALVE**
   (See page AC–33)
2. **INSTALL EVAPORATOR**
   (See page AC–33)

Downloaded from www.Manualslib.com manuals search engine

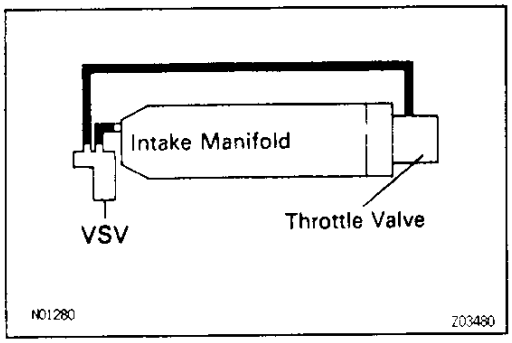

VACUUM SWITCHING VALVE (VSV)

AC01A-07

Ex. 7A–FE Engine Models:
VACUUM HOSE CIRCUIT

AC01B-07

VSV INSPECTION

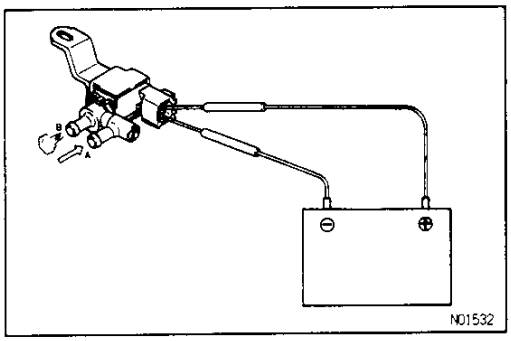

1. **REMOVE VSV**
2. **CHECK VACUUM CIRCUIT CONTINUITY IN VSV BY BLOWING AIR INTO PIPES**

(a) Connect the VSV terminals to the battery terminals as illusstrated.

(b) Blow into pipe "A" and check that air comes out of pipe "B".

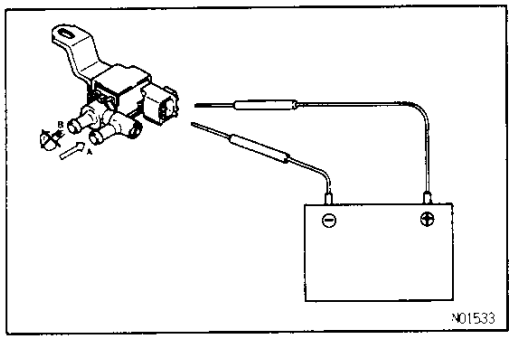

(c) Disconnect the battery.

(d) Blow into pipe "A" and check that air does not come out of pipe "B".
If a problem is found, replace the VSV.

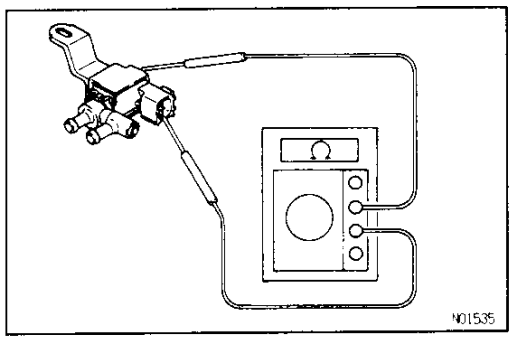

3. **CHECK FOR SHORT CIRCUIT**
Using an ohmmeter, check that there is no continuity between each terminal and the VSV.
If there is continuity, replace the VSV.

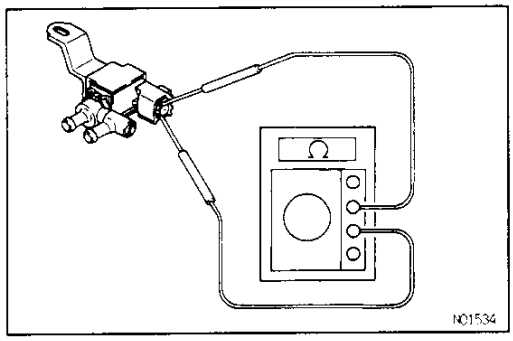

4. **CHECK FOR OPEN CIRCUIT**
Using an ohmmeter, measure the resistance between the two terminals.
Resistance:
30 – 34 Ω at 20°C (68°F)
If resistance value is not as specified, replace the VSV.

AC

Downloaded from www.Manualslib.com manuals search engine

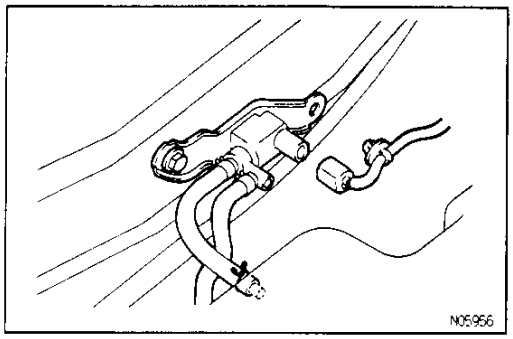

ACOJC-08

VSV INSPECTION

7A – FE ENGINE MODEL:

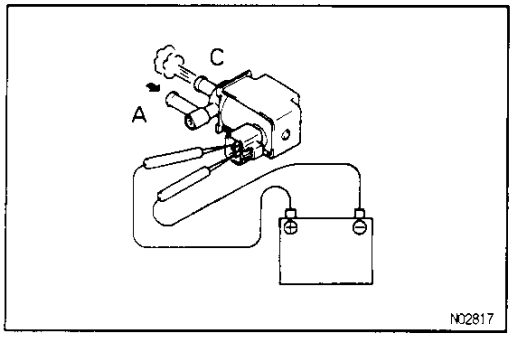

1. INSPECT VACUUM CIRCUIT CONTINUITY IN VSV BY BLOWING AIR INTO PIPES

(a) Connect the VSV terminals to the battery terminals as illustrated.

(b) Blow into pipe "A" and check that air comes out of pipe "C".

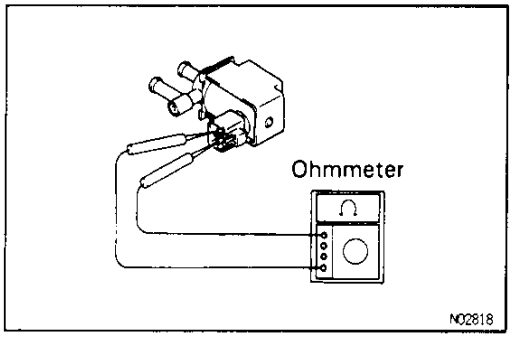

2. INSPECT FOR OPEN CIRCUIT

Using an ohmmeter, measure the resistance between the 2 terminals.

Resistance: 30–34 Ω at 20 °C (68 °F)

If the resistance is not within specification, replace the VSV.

AC

Downloaded from www.Manualslib.com manuals search engine

BLOWER MOTOR

AC18R-01

BLOWER MOTOR REMOVAL

1. **DISCONNECT NEGATIVE (–) TERMINAL CABLE FROM BATTERY**
   CAUTION: Work must be started after 90 seconds from the time the ignition switch is turned to the "LOCK" position and the negative (–) terminal cable is disconnected from the battery.
2. **REMOVE GLOVE BOX ASSEMBLY**
   (See page BO–52)
3. **REMOVE BLOWER MOTOR**

(a) Disconnect the connector from the blower motor.
(b) Remove the 3 screws and the blower motor.

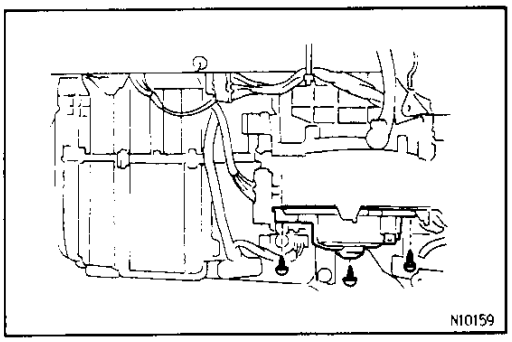

AC18S-01

BLOWER MOTOR INSPECTION

INSPECT BLOWER MOTOR OPERATION

Connect the positive (+) lead from the battery to terminal 1 and the negative (–) lead to terminal 2, then check that the motor operation is smooth.

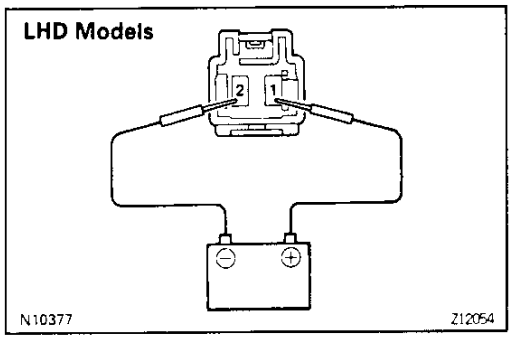

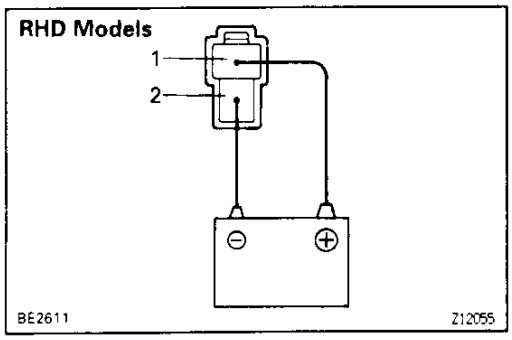

AC

AC18A-01

BLOWER MOTOR INSTALLATION

1. **INSTALL BLOWER MOTOR**

(a) Install the blower motor with the 3 screws.
(b) Connect the connector to the blower motor.

2. **INSTALL GLOVE BOX ASSEMBLY**
   (See page BO–52)
3. **CONNECT NEGATIVE (–) CABLE FROM BATTERY**

Downloaded from www.Manualslib.com manuals search engine

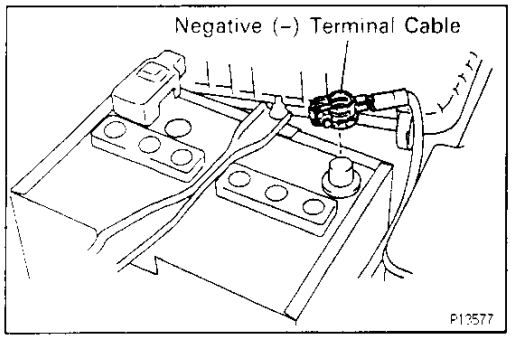

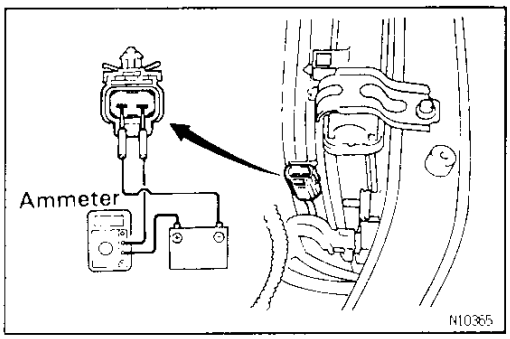

ELECTRIC COOLING FAN

AC0YN-04

ON–VEHICLE INSPECTION

Inspection Condenser Fan Operation:

1. **DISCONNECT NEGATIVE (–) TERMINAL CABLE FROM BATTERY**
   CAUTION: Work must be started after 90 seconds from the time the ignition switch is turned to the "LOCK" position and the negative (–) terminal cable is disconnected from the battery.
2. **INSPECT CONDENSER FAN**
   (a) Disconnect the fan connector.
   (b) Connect battery and ammeter to the cooling fan connector.
   (c) Check that the condenser fan rotates smoothly, and check the reading on the ammeter.
   Standard amperage:
   6.0 – 7.4 A
   (d) Conect the cooling fan connector.
3. **CONNECT NEGATIVE (–) TERMINAL CABLE TO BATTERY**

AC

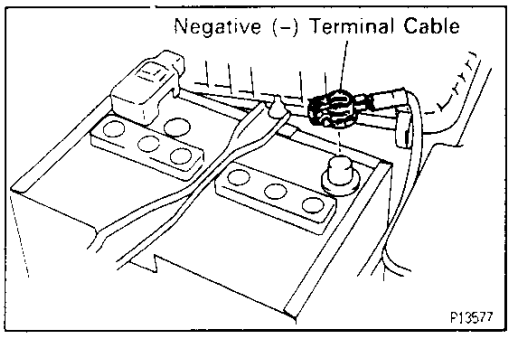

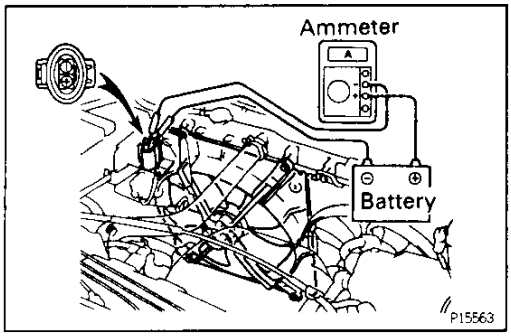

AC19T-01

Inspection Radiator Fan Operation:

1. **DISCONNECT NEGATIVE (–) TERMINAL CABLE FROM BATTERY**
   CAUTION: Work must be started after 90 seconds from the time the ignition switch is turned to the "LOCK" position and the negative (–) terminal cable is disconnected from the battery.
2. **INSPECT RADIATOR FAN**
   (a) Disconnect the cooling fan connector.
   (b) Connect battery and ammeter to the cooling fan connector.
   (c) Check that the cooling fan rotates smoothly, and check the reading on the ammeter.
   Standard amperage:
   5.7 – 7.7 A
   (d) Connect the cooling fan connector.
3. **CONNECT NEGATIVE (–) TERMINAL CABLE TO BATTERY**

Downloaded from www.Manualslib.com manuals search engine

AC19U-01

COOLING FAN RELAYS INSPECTION

(See page AC—79)

AC19V-01

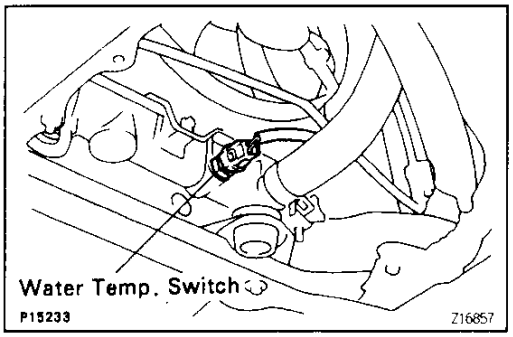

Water Temperature Switch

WATER TEMPERATURE SWITCH INSPECTION

1. **DRAIN ENGINE COOLANT**
2. **REMOVE WATER TEMPERATURE SWITCH**

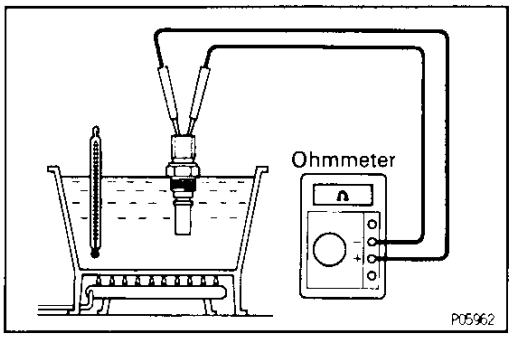

3. **INSPECT WATER TEMPERATURE SWITCH**

(a) Using an ohmmeter, check that there is no continuity between the terminals when the coolant temperature is above 93°C (199°F).

(b) Using an ohmmeter, check that there is continuity between the terminals when the coolant temperature is below 83°C (181°F).
If continuity is not as specified, replace the switch.

AC

4. **REINSTALL WATER TEMPERATURE SWITCH**
5. **REFILL WITH ENGINE COOLANT**
6. **START ENGINE AND CHECK FOR COOLANT LEAKS**

Downloaded from www.Manualslib.com manuals search engine

AIR INLET CONTROL SERVOMOTOR

AC17F-01

AIR INLET SERVOMOTOR REMOVAL

1. **REMOVE GLOVE COMPARTMENT PARTS**
   (See page BO—52)

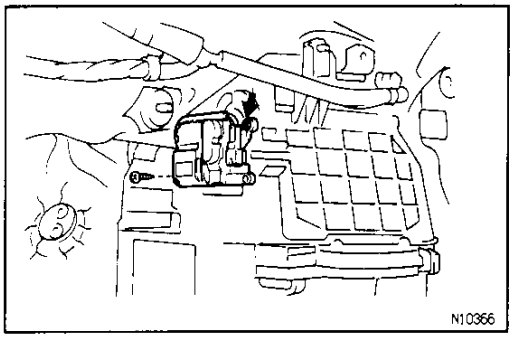

2. **REMOVE SERVOMOTOR**
   (a) Disconnct the connector.
   (b) Remove the 2 screws and the servomotor.

AIR INLET SERVOMOTOR INSPECTION

AC17G-01

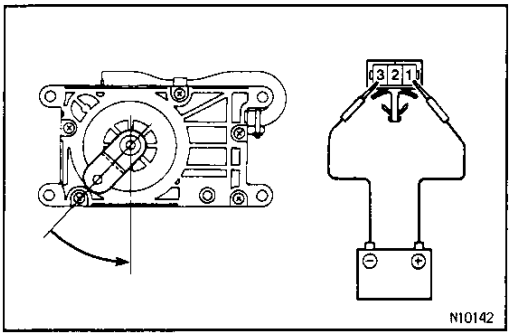

INSPECT SERVOMOTOR OPERATION

(a) Connect the positive (+) lead from the battery to terminal 1 the negative (—) lead to terminal 3, check that the arm rotates to the "FRESH" side smoothly.

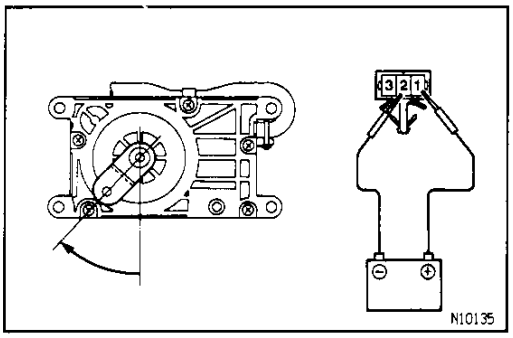

(b) Connect the positive (+) lead from the battery to terminal 1 and the negative (—) lead to terminal 2, check that the arm rotates to the "RECIRC" side smoothly.
If operation is not as specified, replace the servomotor.

AIR INLET SERVOMOTOR INSTALLATION

AC17H-01

1. **INSTALL SERVOMOTOR**
   (a) Install the servomotor with 2 screws.
   (b) Connect the connector.
2. **INSTALL GLOVE COMPARTMENT PARTS**
   (See page BO—52)

AC

Downloaded from www.Manualslib.com manuals search engine

AIR OUTLET CONTROL SERVOMOTOR

AIR OUTLET SERVOMOTOR REMOVAL AC17J-01

1. **REMOVE INSTRUMENT LOWER NO. 1 FINISH PANEL**
   (See page BO—52)
2. **REMOVE INSTRUMENT PANEL FINISH PANEL**
   (See page BO—52)
3. **REMOVE HEATER DUCT NO.2**
   (See page BO—52)
4. **REMOVE SERVOMOTOR**

(a) Disconnect the connector.

(b) Remove the 2 screws and the servomotor.

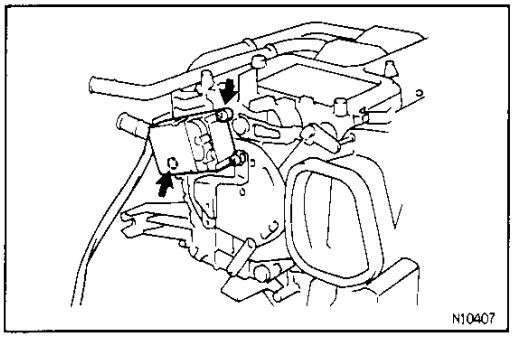

AIR OUTLET SERVOMOTOR INSPECTION AC17K-01

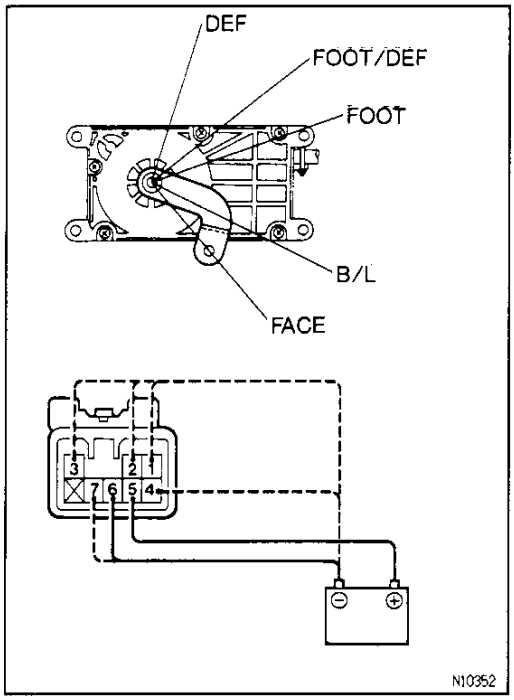

INSPECT SERVOMOTOR OPERATION

(a) Connect the positive (+) lead from the battery to terminal 5 and the negative (−) lead to terminal 6.

(b) Connect the negative (−) lead from the battery to each terminal and check that the arm rotates to each position, as shown below.

Connected terminal	Position
1	FACE
2	B/L
3	FOOT
4	FOOT/ DEF
7	DEF

If operation is not as specified, replace the servomotor.

AC

Downloaded from www.Manualslib.com manuals search engine

AC17L-01

AIR OUTLET SERVOMOTOR INSTALLATION

1. INSTALL SERVOMOTOR

(a) Install the servomotor with 2 screws.

(b) Connect the connector.

2. INSTALL HEATER DUCT

3. INSTALL INSTRUMENT FINISH PANEL

4. INSTALL INSTRUMENT LOWER NO. 1 FINISH PANEL

Downloaded from www.Manualslib.com manuals search engine

BLOWER RESISTOR

AC18B-02

BLOWER RESISTOR REMOVAL

1. **DISCONNECT NEGATIVE (−) TERMINAL CABLE FROM BATTERY**
   CAUTION: Work must be started after 90 seconds from the time the ignition switch is turned to the "LOCK" position and the negative (−) terminal cable is disconnected from the battery.
2. **REMOVE GLOVE BOX ASSEMBLY**
   (See page BO−52)

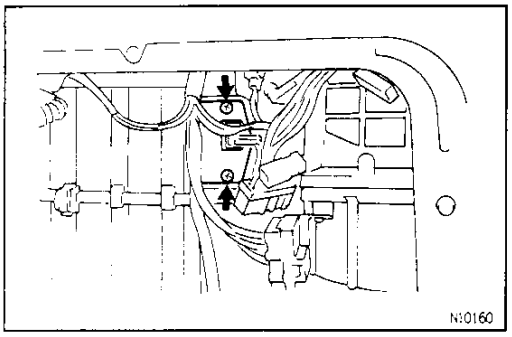

3. **REMOVE BLOWER RESISTOR**
   (a) Disconnect the connector from the blower resistor.
   (b) Remove the 2 screws and the blower resistor.

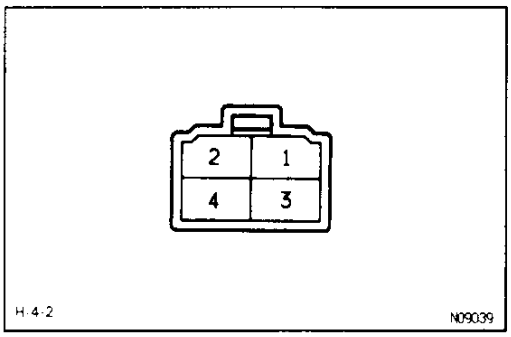

AC18C-01

BLOWER RESISTOR INSPECTION

INSPECT BLOWER RESISTOR CONTINUITY

Condition	Tester connection to terminal number	Specified value
Constant	1 − 2 − 3 − 4	Continuity

If continuity is not as specified, replace the blower resistor.

AC18D-03

BLOWER RESISTOR INSTALLATION

1. **INSTALL BLOWER RESISTOR**
   (a) Install the blower resistor with the 2 screws.
   (b) Connect the connector to the blower resistor.
2. **INSTALL GLOVE BOX ASSEMBLY**
   (See page BO−52)
3. **CONNECT NEGATIVE (−) TERMINAL CABLE FROM BATTERY**

Downloaded from www.Manualslib.com manuals search engine

PRESSURE SWITCH

AC17M-01

ON–VEHICLE INSPECTION

1. **INSTALL MANIFOLD GAUGE SET**
   (See page AC–15)
2. **DISCONNECT CONNECTOR FROM PRESSURE SWITCH**
3. **RUN ENGINE AT APPROX. 2,000 RPM**

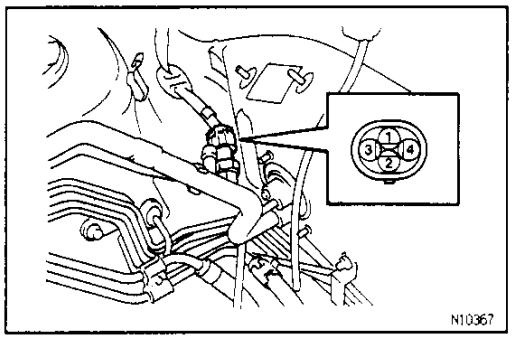

4. **INSPECT PRESSURE SWITCH OPERATION**

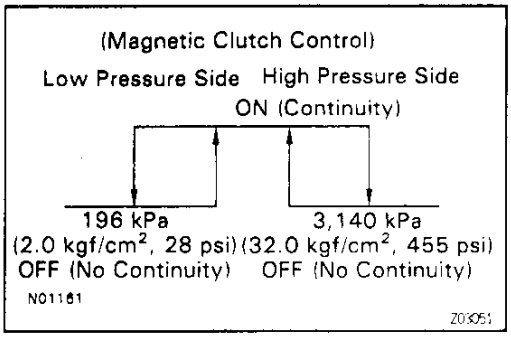

Magnetic Clutch Control:

(a) Connect the positive (+) lead from the ohmmeter to terminal 4 and negative (–) lead to terminal 1.

(b) Check continuity between terminals when refrigerant pressure is changed, as shown.
If operation is not as specified, replace the pressure switch.

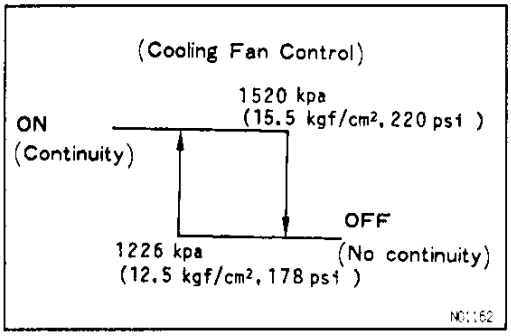

Cooling Fan Control:

(a) Connect the positive (+) lead from the ohmmeter to terminal 2 and negative (–) lead to terminal 3.

(b) Check continuity between terminals when refrigerant pressure is changed, as shown.
If operation is not as specified, replace the pressure switch.

5. **STOP ENGINE AND REMOVE MANIFOLD GAUGE SET**
6. **CONNECT CONNECTOR TO PRESSURE SWITCH**

Downloaded from www.Manualslib.com manuals search engine

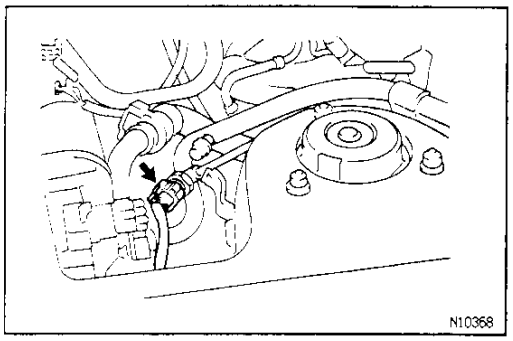

PRESSURE SWITCH REMOVAL

AC17N-01

1. **DISCHARGE REFRIGERANT FROM REFRIGERATION SYSTEM**
   (See page AC-15)
2. **REMOVE PRESSURE SWITCH**
   (a) Disconnect the connector.
   (b) Remove the pressure switch from the liquid tube.
   HINT: Lock the switch mount on the tube with an open end wrench, being careful not to deform the tube, and remove the switch.

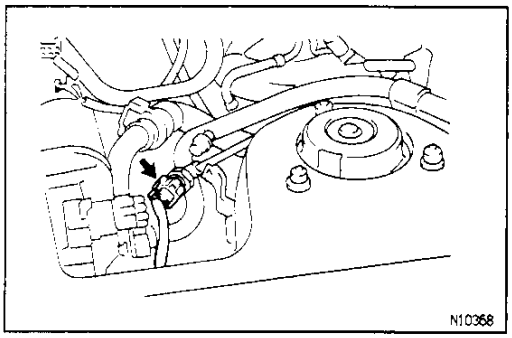

PRESSURE SWITCH INSTALLATION

AC17P-01

1. **INSTALL PRESSURE SWITCH**
   (a) Install the pressure switch to the liquid tube.
   Torque: 9.8 N·m (100 kgf·cm, 7 ft·lbf)
   HINT: Lock the switch mount on the tube with an open end wrench, being careful not to deform the tube, and install the switch.
   (b) Connect the connector.
2. **EVACUATE AIR IN REFRIGERATION SYSTEM AND CHARGE WITH REFRIGERANT**
   Specified amount:
   650 ± 50 g (22.92 ± 1.76 oz.)
3. **INSPECT FOR LEAKAGE OF REFRIGERANT**
   Using a gas leak tester, check for leakage of refrigerant from the pressure switch mount.
4. **INSPECT A/C OPERATION**

Downloaded from www.Manualslib.com manuals search engine

EVAPORATOR TEMPERATURE SENSOR

EVAPORATOR TEMPERATURE SENSOR REMOVAL AC17G-01

1. **REMOVE COOLING UNIT**
   (See page AC—31)
2. **REMOVE EVAPORATOR**
   (See page AC—32)
3. **REMOVE EVAPORATOR TEMPERATURE SENSOR**
   Pull out the evaporator temperature sensor from evaporator.

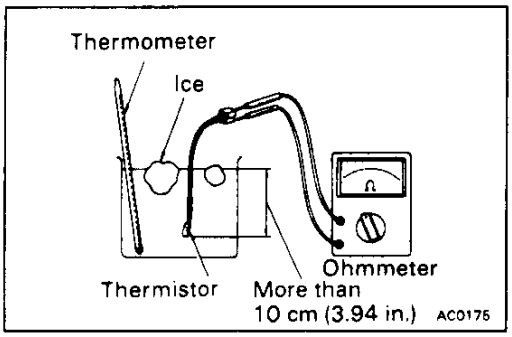

EVAPORATOR TEMPERATURE SENSOR INSPECTION AC17R-01

Check resistance between terminal of evaporator temperature sensor connector at each temperature.

Resistance:

at 0 °C (32 °F) 4.6 — 5.0 kΩ

at 15 °C (59 °F) 2.1 — 2.6 kΩ

(As temperature as temperature increases, the resistance decreases gradually.)

EVAPORATOR TEMPERATURE SENSOR INSTALLATION AC17S-01

1. **INSTALL EVAPORATOR TEMPERATURE SENSOR**
   Install the evaporator temperature sensor to evaporator.
2. **INSTALL EVAPORATOR**
   (See page AC—33)
3. **INSTALL COOLING UNIT**
   (See page AC—33)

Downloaded from www.Manualslib.com manuals search engine

REVOLUTION DETECTING SENSOR

AC17T-03

Ex. 7A–FE Engine Models:

ON–VEHICLE INSPECTION

1. **DISCONNECT NEGATIVE (–) TERMINAL CABLE FROM BATTERY**
   CAUTION: Work must be started after 90 seconds from the time the ignition swithch is turned to the "LOCK" position and the negative (–) terminal cable is disconnected from the battery.
2. **DISCONNECT CONNECTOR OF REVOLUTION DETECTING SENSOR**
3. **INSPECT REVOLUTION DETECTING SENSOR**
   Check the resistance between terminals 1 and 2 of the sensor.
   Specified resistance:
   165 – 205 Ω at 20 °C (68°F)
   If the resistance value is not as specified, replace the revolution detecting sensor.

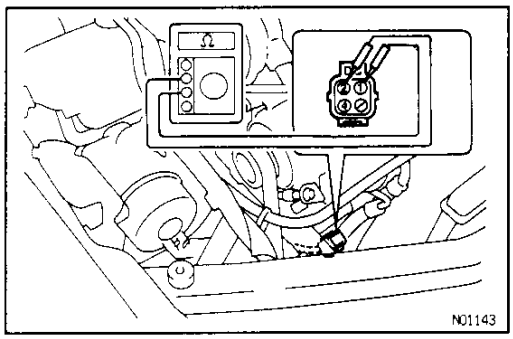

AC17U-01

REVOLUTION DETECTING SENSOR REMOVAL

1. **REMOVE COMPRESSOR**
   (See page AC–42)
2. **REMOVE REVOLUTION DETECTING SENSOR**

(a) Remove 2 bolts.
(b) Remove the revolution detecting sensor.

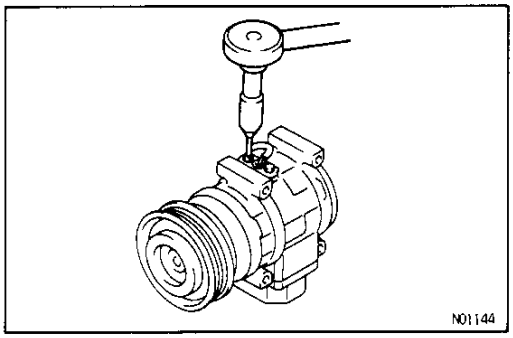

AC17V-01

REVOLUTION DETECTING SENSOR INSTALLATION

1. **INSTALL REVOLUTION DETECTING SENSOR**
   Using a torque wrench, tighten the bolts.
   Torque: 5.9 N·m (60 kgf·cm, 52 in.·lbf)
2. **INSTALL COMPRESSOR**
   (See page AC–57)

AC

Downloaded from www.Manualslib.com manuals search engine

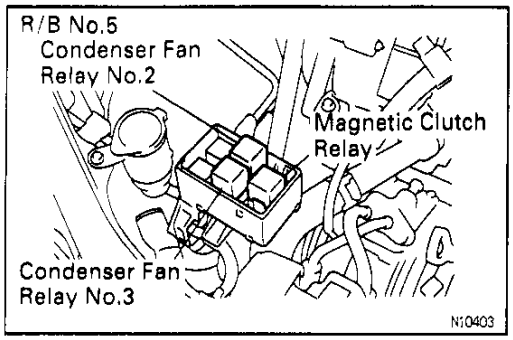

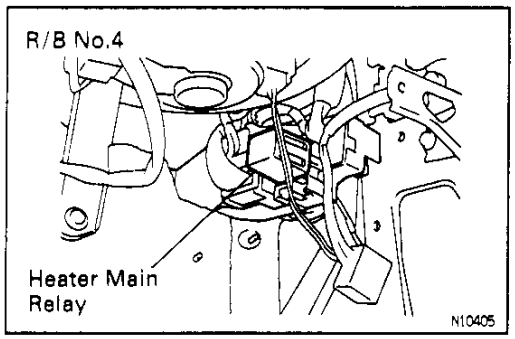

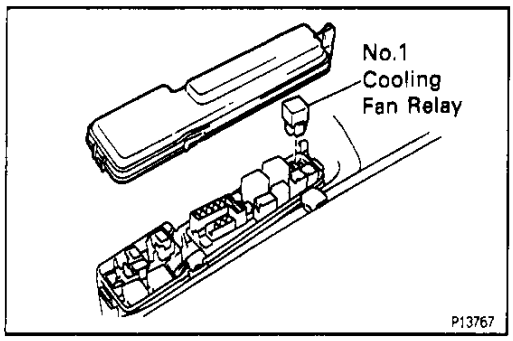

RELAY

AC19W-01

RELAY REMOVAL

1. **DISCONNECT NEGATIVE (−) TERMINAL CABLE FROM BATTERY**
   CAUTION: Work must be started after 90 seconds from the time the ignition switch is turned to the "LOCK" position and the negative (−) terminal cable is disconnected from the battery.
2. **REMOVE RELAY**

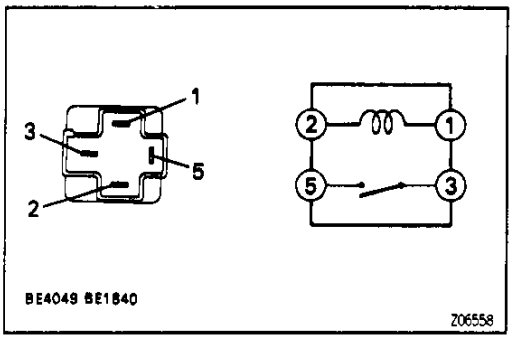

AC19X-01

RELAY INSPECTION

1. **INSPECT MAGNETIC CLUTCH RELAY CONTINUITY**

Condition	Tester connection to terminal number	Specified value
Constant	1 − 2	Continuity
Apply B+ between terminals 1 and 2.	3 − 5	Continuity

If continuity is not as specified, replace the relay.

Downloaded from www.Manualslib.com manuals search engine

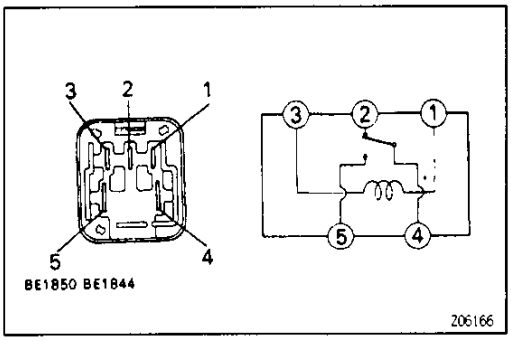

2. INSPECT HEATER MAIN RELAY CONTINUITY

Condition	Tester connection to terminal number	Specified value
Constant	1 – 3 2 – 4	Continuity
Apply B+ between terminals 1 and 3.	4 – 5	Continuity

If continuity is not as specified, replace the relay.

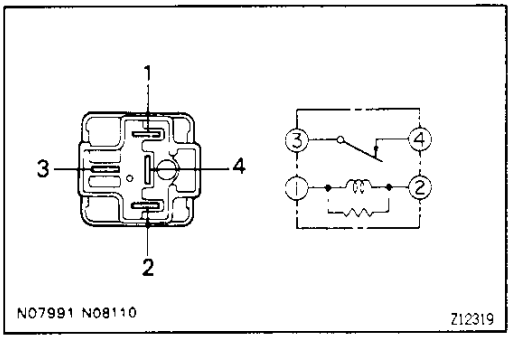

3. INSPECT COOLING FAN RELAY NO. 1 CONTINUITY

Condition	Tester connection to terminal number	Specified value
Constant	1 – 2 3 – 4	Continuity
Apply B+ between terminals 1 and 2.	3 – 4	No continuity

If continuity is not as specified, replace the relay.

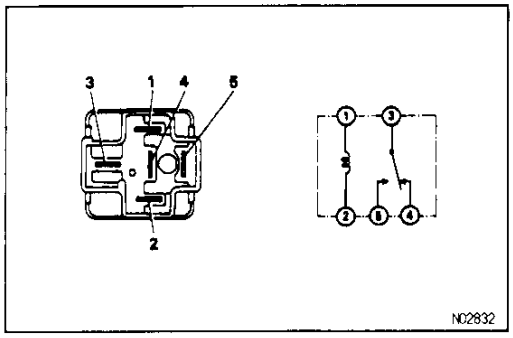

4. INSPECT CONDENSER FAN RELAY NO. 2 CONTINUITY

Condition	Tester connection to terminal number	Specified value
Constant	1 – 2 3 – 4	Continuity
Apply B+ between terminals 1 and 2.	3 – 5	Continuity

If continuity is not as specified, replace the relay.

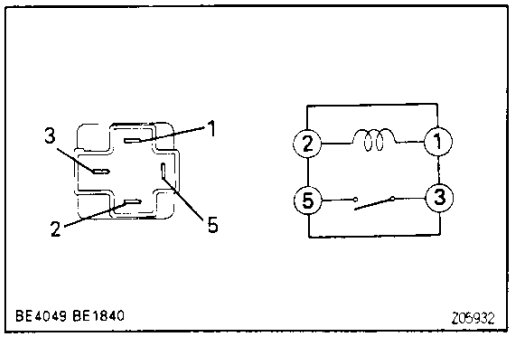

5. INSPECT CONDENSER FAN RELAY NO. 3 CONTINUITY

Condition	Tester connection to terminal number	Specified value
Constant	1 – 2	Continuity
Apply B+ between terminals 1 and 2.	3 – 5	Continuity

If continuity is not as specified, replace the relay.

AC17Y-01

RELAYS INSTALLATION

1. INSTALL RELAYS
2. CONNECT NEGATIVE (–) TERMINAL CABLE TO BATTERY

Downloaded from www.Manualslib.com manuals search engine

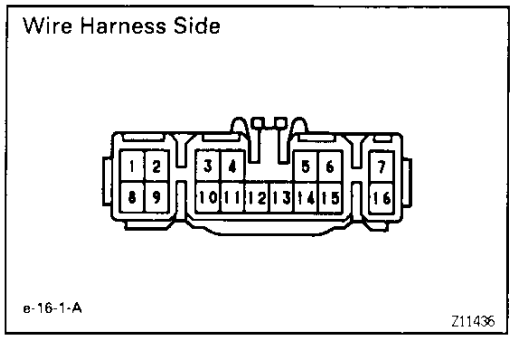

AIR CONDITIONER AMPLIFIER

AC17Z-02

AIR CONDITIONER AMPLIFIER INSPECTION

INSPECT AMPLIFIER CIRCUIT

(a) Disconnect the amplifier and inspect the connector on the wire harness side, as shown in the chart below.
Test conditions:
- Ignition switch ON
- Temperature control dial MAX COOL
- Blower dial HI

Tester connection to terminal number	Condition	Specified value (Continuity)
6 — Ground	Constant	Continuity
Tester connection to terminal number	**Condition**	**Specified value (Resistance)**
11 — 15	Constant	1.5 KΩ at 20 °C (68 °F)
15 — 16 (Ex. 7A—FE)	Constant	Approx. 115 Ω at 20 °C (68 °F)
7 — Ground	Constant	1.2 KΩ at 20 °C (68 °F)
Tester connection to terminal number	**Condition**	**Specified value (Voltage)**
4 — Ground (RHD only)	ECON switch on	Battery voltage
4 — Ground (RHD only)	ECON switch off	No voltage
5 — Ground	Constant	Approx. 10 — 14 V
10 — Ground	A/C switch on	Battery voltage
10 — Ground	A/C switch off	No voltage
12 — Ground	A/C switch on	Battery voltage
12 — Ground	A/C switch off	No voltage
14 — Ground	Constant	Battery voltage

If circuit is as specified, try replacing the amplifier with a new one. If the circuit is not as specified, inspect the circuits connected to other parts.

AC

Downloaded from www.Manualslib.com manuals search engine

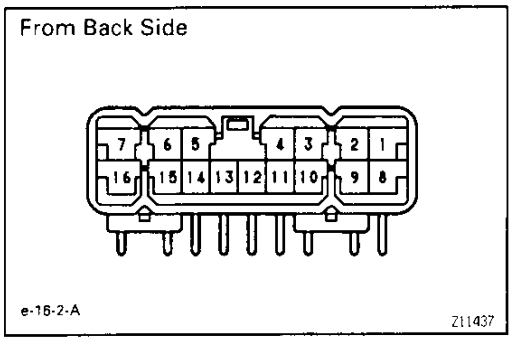

(b) Connect the connector to A/C amplifier and inspect wire harness side connector from the back side, as shown.

Tester condition:

- Ignition switch ON
- Temperature control dial MAX COOL
- Blower dial HI

Tester connection to terminal number	Condition	Specified value (Voltage)
3 — Ground	Refrigerant pressure 196 — 3,140 kPa	Battery voltage
3 — Ground	Refrigerant pressure less than 196 or more than 3,140 kPa	No voltage

If circuit is not as specified, replace the amplifier.

AC

Downloaded from www.Manualslib.com manuals search engine

AIR CONDITIONER CONTROL ASSEMBLY

AIR CONDITIONER CONTROL ASSEMBLY

AC180-01

REMOVAL

1. **DISCONNECT NEGATIVE (−) TERMINAL CABLE FROM BATTERY**
   CAUTION: Work must be started after 90 seconds from the time the ignition switch is turned to the "LOCK" position and the negative (−) terminal cable is disconnected from the battery.
2. **REMOVE INSTRUMENT LOWER FINISH PANEL**
   (See page BO−52)
3. **REMOVE HEATER AIR DUCT NO. 2**
   Remove the screw and heater air duct No. 2.
4. **DISCONNECT WATER VALVE CONTROL CABLE**
5. **DISCONNECT MAX COOL DAMPER CONTROL CABLE**

(a) Remove the water valve control cable guide.
(b) Disconnect the max cool damper conntrol cable from the heater unit.

6 **REMOVE UPPER CONSOLE PANEL**
(See page BO−52)

7. **REMOVE CENTER CLUSTER PANEL**
   (See page BO−52)

AC

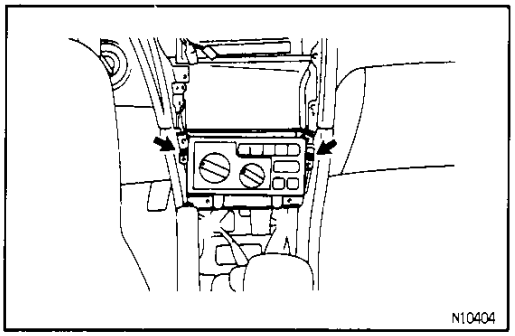

8. **REMOVE AIR CONDITIONER CONTROL ASSEMBLY**

(a) Remove the 2 screws.
(b) Disconnet the connector.
(c) Remove the air conditioner control assembly.

Downloaded from www.Manualslib.com manuals search engine

AIR CONDITIONING CONTROL ASSEMBLY INSPECTION

AC18Y-01

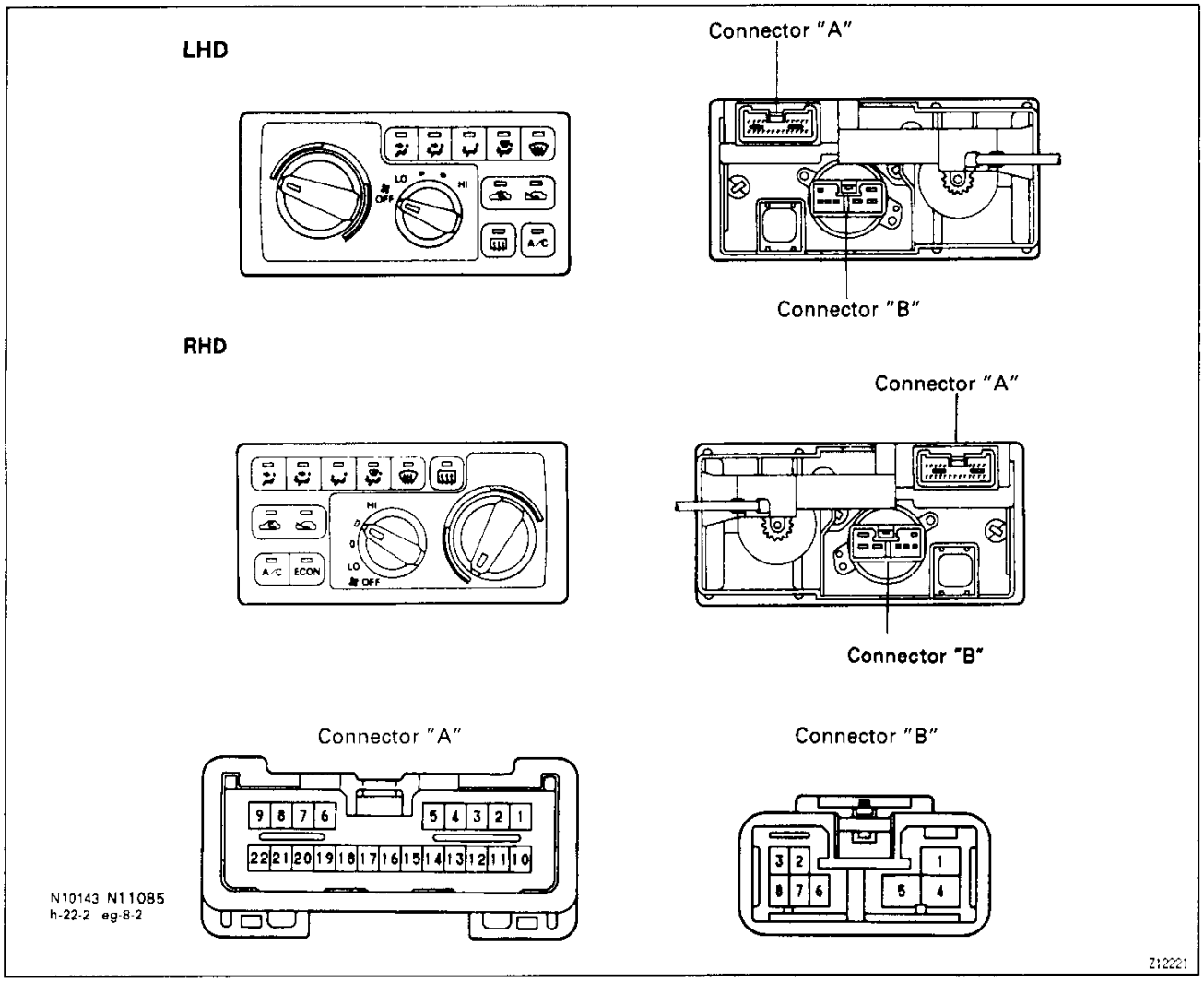

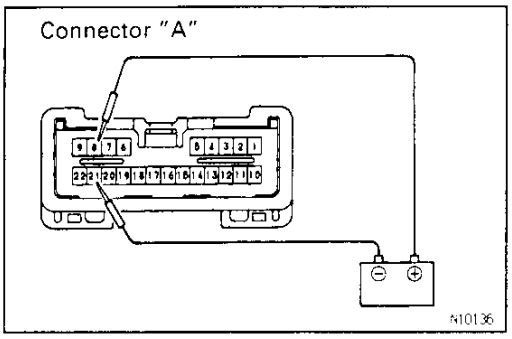

Illumination:

INSPECT ILLUMINATION

LHD Models:

(a) Connect the positive (+) lead from the battery to terminal A−8 and the negative (−) lead to terminal A−21.

(b) Check that the illumination lights up.
If the illumination does not light up, test the bulb.

Downloaded from www.Manualslib.com manuals search engine

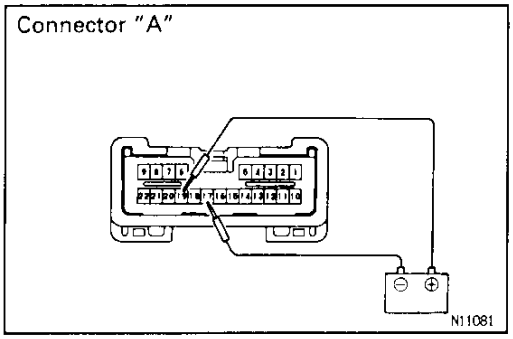

RHD Models:

(a) Connect the positive (+) lead from the battery to terminal A–19 and the negative (–) lead to terminal A–17.

(b) Check that the illumination lights up.
If the illumination does not light up, test the bulb.

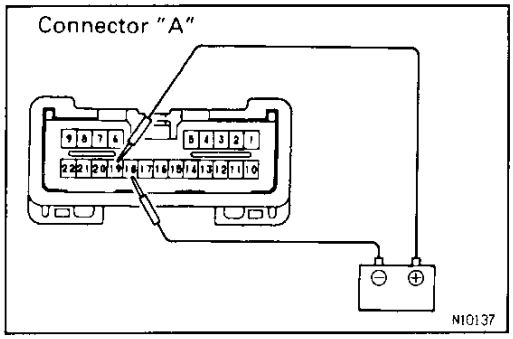

Indicators:

1. INSPECT A/C INDICATOR

LHD Models:

(a) Connect the positive (+) lead from the battery to terminal A–19 and the negative (–) lead to terminal A–18.

(b) Push the A/C button in and check that the indicator light up.
If operation is not as specified, replace the A/C control assembly.

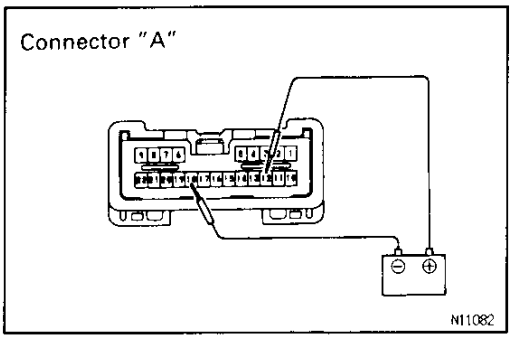

RHD Models:

(a) Connect the positive (+) lead from the battery to terminal A–12 and the negative (–) lead to terminal A–18.

(b) Push the A/C button in and check that the indicator light up.
If operation is not as specified, replace the A/C control assembly.

AC

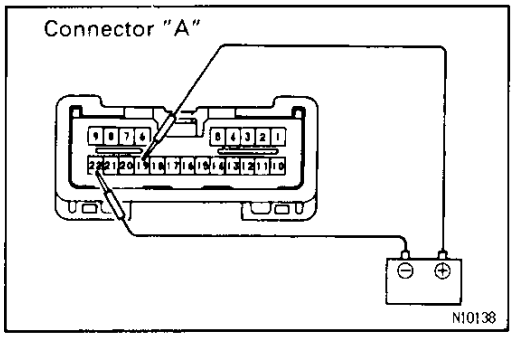

2. INSPECT MODE INDICATOR

LHD Models:

(a) Connect the positive (+) lead from the battery to terminal A–19 and the negative (–) lead to terminal A–22.

(b) Push each of the mode buttons in and check that their indicators light up.
If operation is not as specified, replace the A/C control assembly.

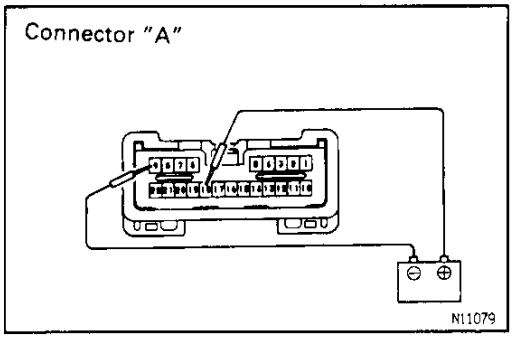

RHD Models:

(a) Connect the positive (+) lead from the battery to terminal A–18 and the negative (–) lead to terminal A–9.

(b) Push each of the mode buttons in and check that their indicators light up.
If operation is not as specified, replace the A/C control assembly.

Downloaded from www.Manualslib.com manuals search engine

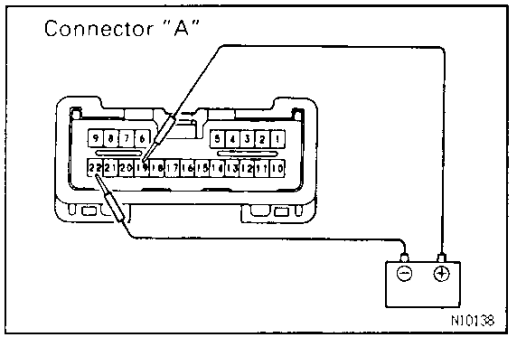

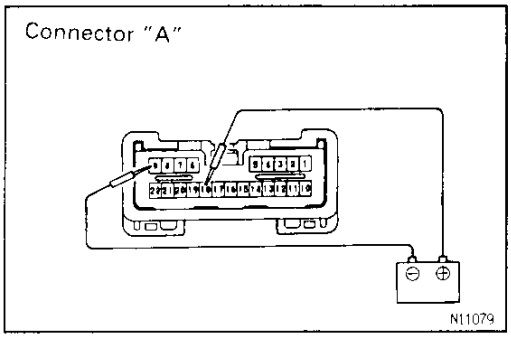

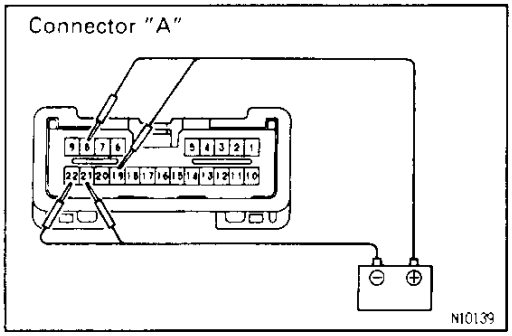

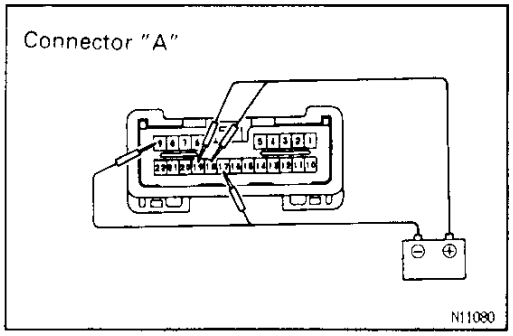

3. INSPECT AIR INLET INDICATOR

LHD Models:

(a) Connect the positive (+) lead from the battery to terminal A–19 and the negative (–) lead to terminal A–22.

(b) Check that the FRESH and RECIRC indicators light up alternately each time the air inlet control switch button is pressed.

If operation is not as specified, replace the A/C control assembly.

RHD Models:

(a) Connect the positive (+) lead from the battery to terminal A–18 and the negative (–) lead to terminal A–9.

(b) Check that the FRESH and RECIRC indicators light up alternately each time the air inlet control switch button is pressed.

If operation is not as specified, replace the A/C control assembly.

4. INSPECT INDICATOR DIMMING OPERATION

LHD Models:

(a) Connect the positive (+) lead from the battery to terminal A–19 and the negative (–) lead to terminal A–21 and A–22.

(b) Connect the positive (+) lead from the battery to terminal A – 8 and check that the mode indicator dims.

If operation is not as specified, replace the A/C control assembly.

RHD Models:

(a) Connect the positive (+) lead from the battery to terminal A–18 and the negative (–) lead to terminal A–17 and A–9.

(b) Connect the positive (+) lead from the battery to terminal A–19 and check that the mode indicator dims.

If operation is not as specified, replace the A/C control assembly.

AC

Downloaded from www.Manualslib.com manuals search engine

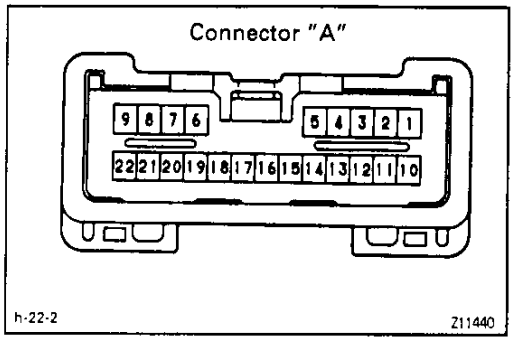

5. INSPECT A/C SWITCH CONTINUITY

LHD Models:

Switch position	Tester connection to terminal number	Specified value
OFF	–	No continuity
ON	A15 – A20	Continuity

If continuity is not as specified, replace the A/C control assembly.

RHD Models:

Switch position	Tester connection to terminal number	Specified value
OFF	–	No continuity
ON	A10 – A11	Continuity

If continuity is not as specified, replace the A/C control assembly.

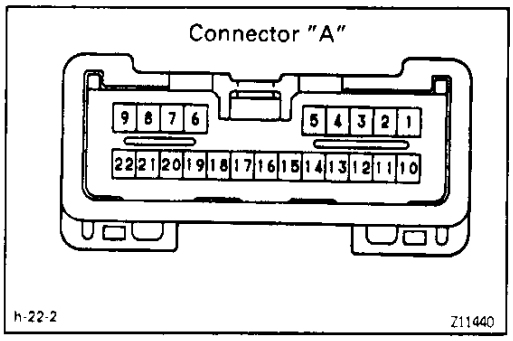

AC

6. INSPECT MODE CONTROL SWITCH CONTINUITY

LHD Models:

Switch position	Tester connection to terminal number	Specified value
FACE	A7 – A22	Continuity
B/L	A6 – A22	Continuity
FOOT	A5 – A22	Continuity
FOOT/DEF	A4 – A22	Continuity
DEF	A3 – A22	Continuity

If continuity is not as specified, replace the A/C control assembly.

RHD Models:

Switch position	Tester connection to terminal number	Specified value
FACE	A13 – A9	Continuity
B/L	A1 – A9	Continuity
FOOT	A5 – A9	Continuity
FOOT/DEF	A8 – A9	Continuity
DEF	A7 – A19	Continuity

If continuity is not as specified, replace the A/C control assembly.

Downloaded from www.Manualslib.com manuals search engine

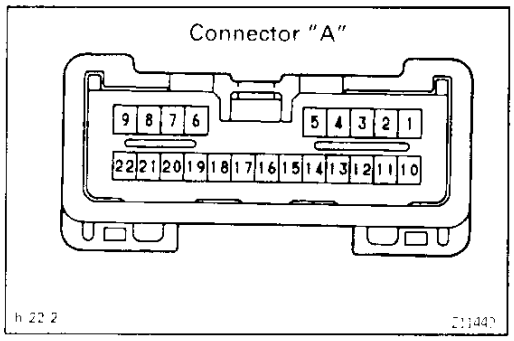

7. INSPECT AIR INLET CONTROL SWITCH CONTINUITY

LHD Models:

Switch position	Tester connectoin to terminal number	Specified value
RECIRC	A17 – A22	Continuity
FRESH	A16 – A22	Continuity

If continuity is not as specified, replace the A/C control assembly.

RHD Models:

Switch position	Tester connectoin to terminal number	Specified value
RECIRC	A3 – A9	Continuity
FRESH	A4 – A9	Continuity

If continuity is not as specified, replace the A/C control assembly.

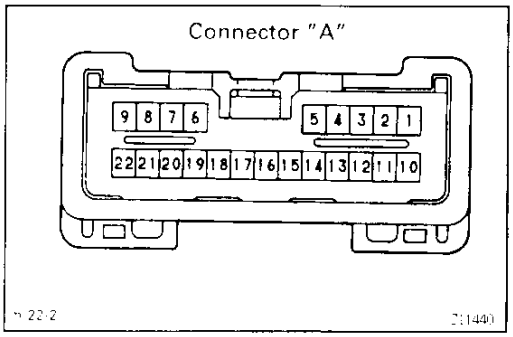

8. INSPECT ECON SWITCH CONTINUITY (RHD Only)

Switch position	Tester connection to terminal number	Specified value
OFF	–	No continuity
ON	A2 – A10	Continuity

If continuity is not as specified, replace the A/C control assembly.

9. INSPECT BLOWER SPEED CONTROL SWITCH CONTINUITY

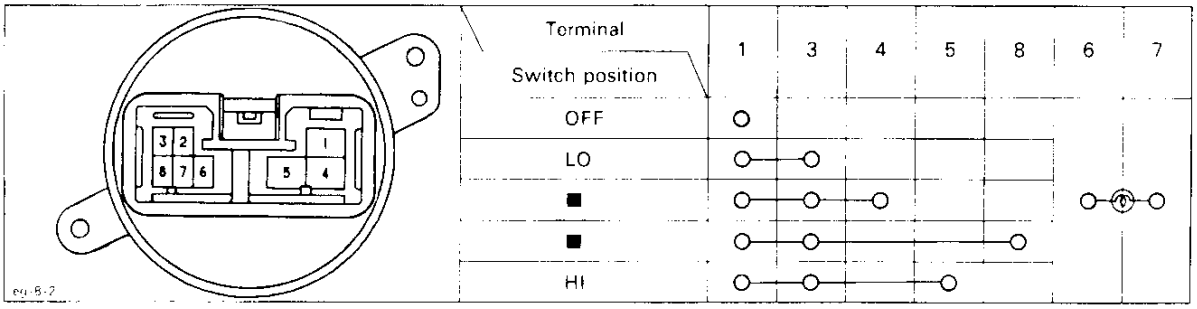

If continuity is not as specified, replace the A/C control assembly.

Downloaded from www.Manualslib.com manuals search engine

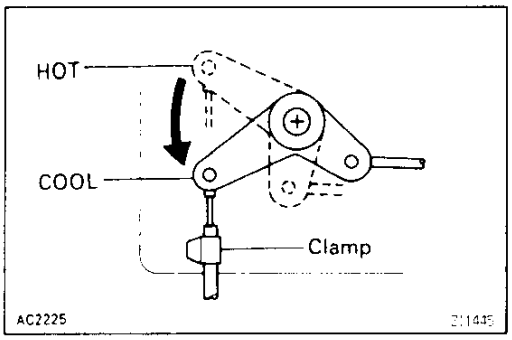

AIR CONDITIONING CONTROL CABLE ADJUSTMENT

AC182-01

1. **ADJUST AIR MIX DAMPER CONTROL CABLE**
   Set the air mix damper and the control switch to "COOL" position, install the control cable and lock the clamp while lightly pushing the outer cable in the direction shown by arrow.

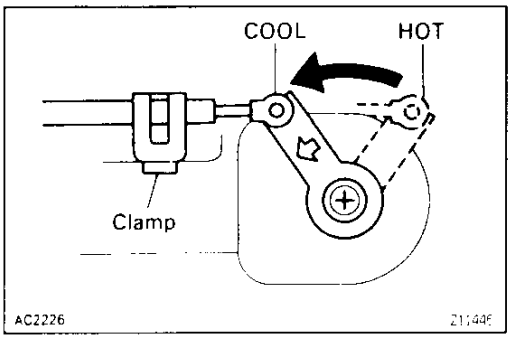

2. **ADJUST WATER VALVE CONTROL CABLE**
   Set the water valve and control switch to "COOL" position, install the control cable and lock the clamp while lightly pushing the outer cable in the direction shown by the arrow.

AIR CONDITIONING CONTROL ASSEMBLY INSTALLATION

AC183-01

1. **INSTALL A/C CONTROL PANEL**
   (a) Connect the connector to A/C control panel.
   (b) Install the A/C colntrol panel with 2 screws.
2. **INSTALL CENTER CLUSTER PANEL**
3. **CONNECT MAX COOL DAMPER CONTROL CABLE**
4. **CONNECT WATER VALVE CONTROL CABLE**
5. **INSTALL HEATER DUCT NO. 2**
6. **INSTALL INSTRUMENT LOWER FINISH PANEL**
7. **INSTALL UPPER CONSOL PANEL**
8. **CONNECT NEGATIVE (−) TERMINAL CABLE TO BATTERY**
9. **INSPECT A/C OPERATION**

AC

Downloaded from www.Manualslib.com manuals search engine

SERVICE SPECIFICATIONS

SERVICE DATA

AC184-05

Refrigerant charge volume		650 ± 50 g (22.92 ± 1.76 oz)
Drive belt deflection		–
7A–FE		6.0 – 7.0 mm (0.23 – 0.27 in.)
5S–FE and 3S–FE		6.0 – 9.0 mm (0.23 – 0.35 in.)
3S–GE		9.0 – 11.0 mm (0.35 – 0.43 in.)
Drive belt tension (Reference)		–
7A–FE	New belt	520 – 755 N (53 – 77 kgf)
	Used belt	264 – 353 N (27 – 36 kgf)
5S–FE and 3S–FE	New belt	617 – 853 N (63 – 87 kgf)
	Used belt	441 – 530 N (45 – 54 kgf)
3S–GE	New belt	617 – 853 N (63 – 87 kgf)
	Used belt	333 – 422 N (34 – 43 kgf)
Idle speed		–
7A–FE	Magnetic clutch not engaged	Approx. 700 rpm
	Magnetic clutch engaged	Approx. 900 rpm
5S–FE and 3S–FE	Magnetic clutch not engaged	Approx. 750 rpm
	Magnetic clutch engaged	Approx. 850 rpm
3S–GE	Magnetic clutch not engaged	Approx. 850 rpm
	Magnetic clutch engaged	Approx. 950 rpm
Magnetic clutch clearance		0.5 ± 0.15 mm (0.020 ± 0.006 in.)

TORQUE SPECIFICATIONS

AC185-02

AC

Part tightened	N·m	kgf·cm	ft·lbf
Suction hose x Compressor	10	100	7
Discharge hose x Compressor	10	100	7
Compressor x Engine	25	250	18
Service valve x Compressor cylinder	25	250	18
Front housing x Compressor cylinder	25	250	18
Liquid tube x Receiver	5.4	55	48 in.·lbf
Liquid tube x Condenser	10	100	7
Expansion valve x Evaporator	5.4	55	48 in.·lbf
Suction tube x A/C unit	10	100	7
Liquid tube x A/C unit	10	100	7
Pressure switch x Liquid tube	10	100	7
Revolution detecting sensor x Compressor	5.9	60	52 in.·lbf

Downloaded from www.Manualslib.com manuals search engine

AC

Downloaded from www.Manualslib.com manuals search engine

Downloaded from www.Manualslib.com manuals search engine

ELECTRICAL WIRING DIAGRAMS

ABBREVIATION

The following abbreviations are used in this wiring diagram.

ABS	=	Anti-Lock Brake System
A/C	=	Air Conditioner
ACIS	=	Acoustic Control Induction System
A/T	=	Automatic Transaxle
COMB.	=	Combination
ECT	=	Electronic Controlled Transmission
ECU	=	Electronic Control Unit
EFI	=	Electronic Fuel Injection
Ex.	=	Except
FL	=	Fusible Link
J/B	=	Junction Block
IIA	=	Integrated Ignition Assembly
ISC	=	Idle Speed Control
LH	=	Left-Hand
LHD	=	Left–Hand Drive
M/T	=	Manual Transaxle
O/D	=	Overdrive
R/B	=	Relay Block
RH	=	Right-Hand
RHD	=	Right–Hand Drive
SW	=	Switch
TEMP.	=	Temperature
TVSS	=	Toyota Vehicle Security System
VSV	=	Vacuum Switching Valve
w/	=	With
w/o	=	Without

* The system shown here is an EXAMPLE ONLY. It is different to the actual circuit shown in the wiring diagram section.

EWD

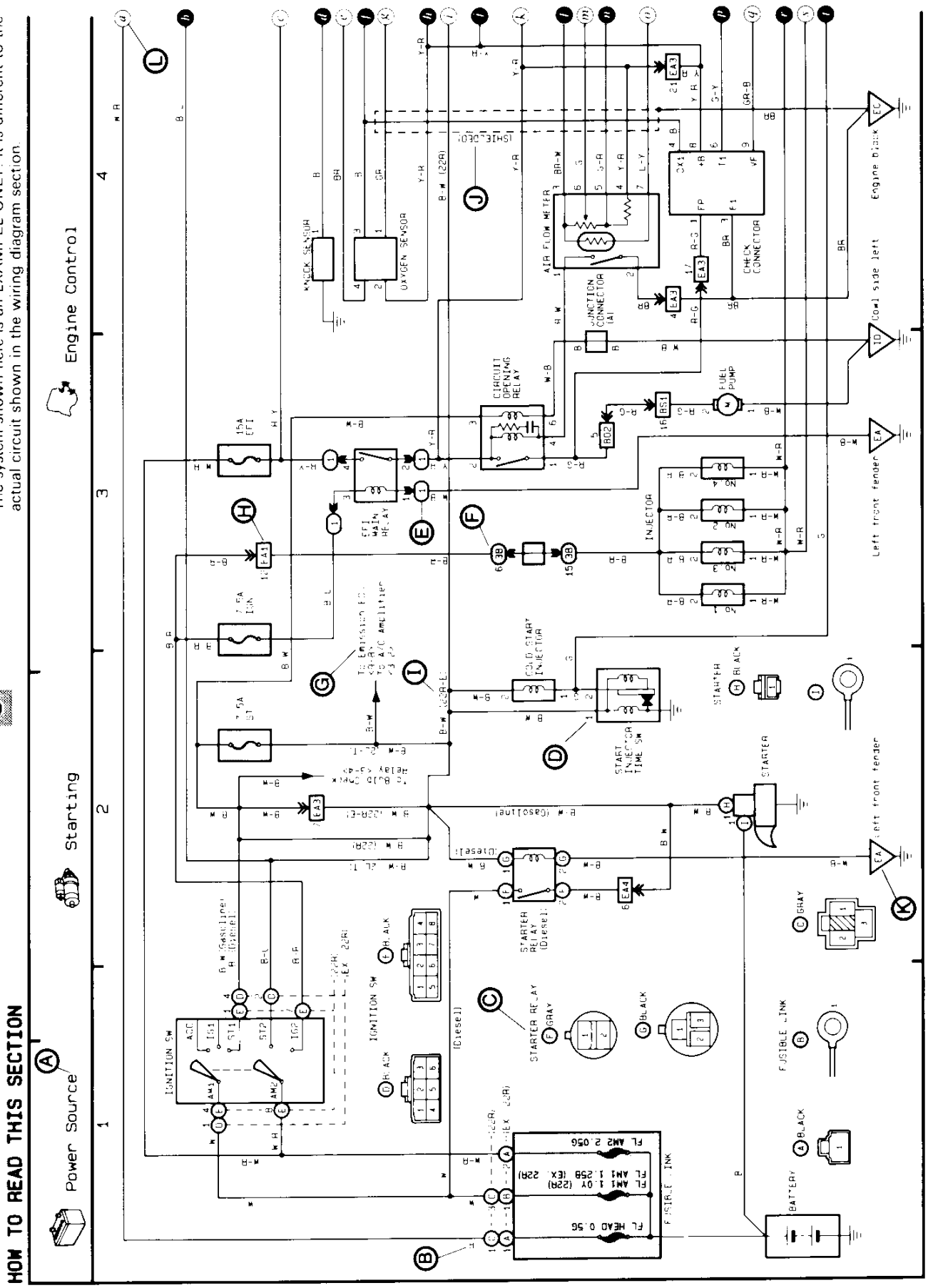

Downloaded from www.Manualslib.com manuals search engine

Downloaded from www.Manualslib.com manuals search engine

Ⓐ: System Title

Ⓑ: Indicates the wiring color.

Wire colors are indicated by an alphabetical code.

B	= Black	L	= Blue	R	= Red
BR	= Brown	LG	= Light Green	V	= Violet
G	= Green	O	= Orange	W	= White
GR	= Gray	P	= Pink	Y	= Yellow

The first letter indicates the basic wire color and the second letter indicates the color of the stripe.

Example: L – Y

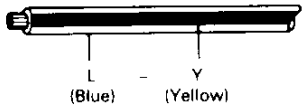

Ⓒ: Indicates the connector to be connected to a part (the numeral indicates the pin No.)

Ⓓ: Indicates the pin number of the connector. The numbering system is different for female and male connectors.

Example: Numbered in order from upper left to lower right — Numbered in order from upper right to lower left

The numbering system for the overall wiring diagram is the same as above.

Ⓔ: Indicates a Relay Block. No shading is used and only the Relay Block No. is shown to distinguish it from the J/B.

Example: ① Indicates Relay Block No. 1.

Ⓕ: Junction Block (The number in the circle is the J/B No. and the connector code is shown beside it). Junction Blocks are shaded to clearly separate them from other parts (different junction blocks are shaded differently for further clarification).

Example:

3B indicates that it is inside Junction Block No. 3.

Ⓖ: Indicates related system.

Ⓗ: Indicates the wiring harness and wiring harness connector. The wiring harness with male terminal is shown with arrows (⩔). Outside numerals are pin numbers.

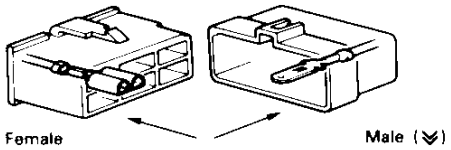

Ⓘ: ( ) is used to indicate different wiring and connector, etc. when the vehicle model, engine type, or specification is different.

Ⓙ: Indicates a shielded cable.

Ⓚ: Indicates a ground point.

Ⓛ: The same code occuring on the next page indicates that the wire harness is continuous.

EWD

SYSTEM INDEX

(Location No. 1 to 38)

SYSTEMS	LOCATION
ABS (Anti-Lock Brake System)	20-3
Air Conditioner	33-3
Auto Antenna	23-4
Back-Up Light	17-2
Charging	1-3
Cigarette Lighter	28-3
Clock	28-4
Combination Meter	30-3
Cruise Control	19-3
Door Lock Control	26-3 (LHD) 27-3 (RHD)
ECT (Electronic Controlled Transmission)	6-3
Engine Control	2-3 (3S GE) 3-3 (3S FE) 4-3 (7A FE) 5-3 (5S FE)
Front Fog Light	11-3
Front Wiper and Washer	21-2
Headlight	7-3 (w/ Daytime Running Light) 8-3 (Germany) 10-3 (w/o Daytime Running Light)
Headlight Beam Level Control	9-3
Headlight Cleaner	16-2
Horn	15-4
Ignition	1-4
Illumination	13-3
Interior Light	14-3
Light Auto Turn Off (Australia)	10-4
Light Reminder Buzzer	11-1
Moon Roof	28-2
Power Source	1~33-1
Power Window	24-3
Radiator Fan and Condenser Fan	32-3
Radio and Player	22-3 (w/ Power Amplifier) 23-2 (w/o Power Amplifier)
Rear Fog Light	12-3
Rear Window Defogger and Mirror Heater	29-3
Rear Wiper and Washer	21-4
Remote Control Mirror	25-3
Seat Heater	16-4
Shift Lock	18-2
Starting	1-2
Stop Light	17-4
Taillight	15-3
Turn Signal and Hazard Warning Light	18-4
TVSS (Toyota Vehicle Security System)	31-3
Unlock and Seat Belt Warning (G.C.C.)	8-4
Junction Block and Wire Harness Connector	34~35-1
Connector Joining Wire Harness and Wire Harness	35~38-1

Downloaded from www.Manualslib.com manuals search engine

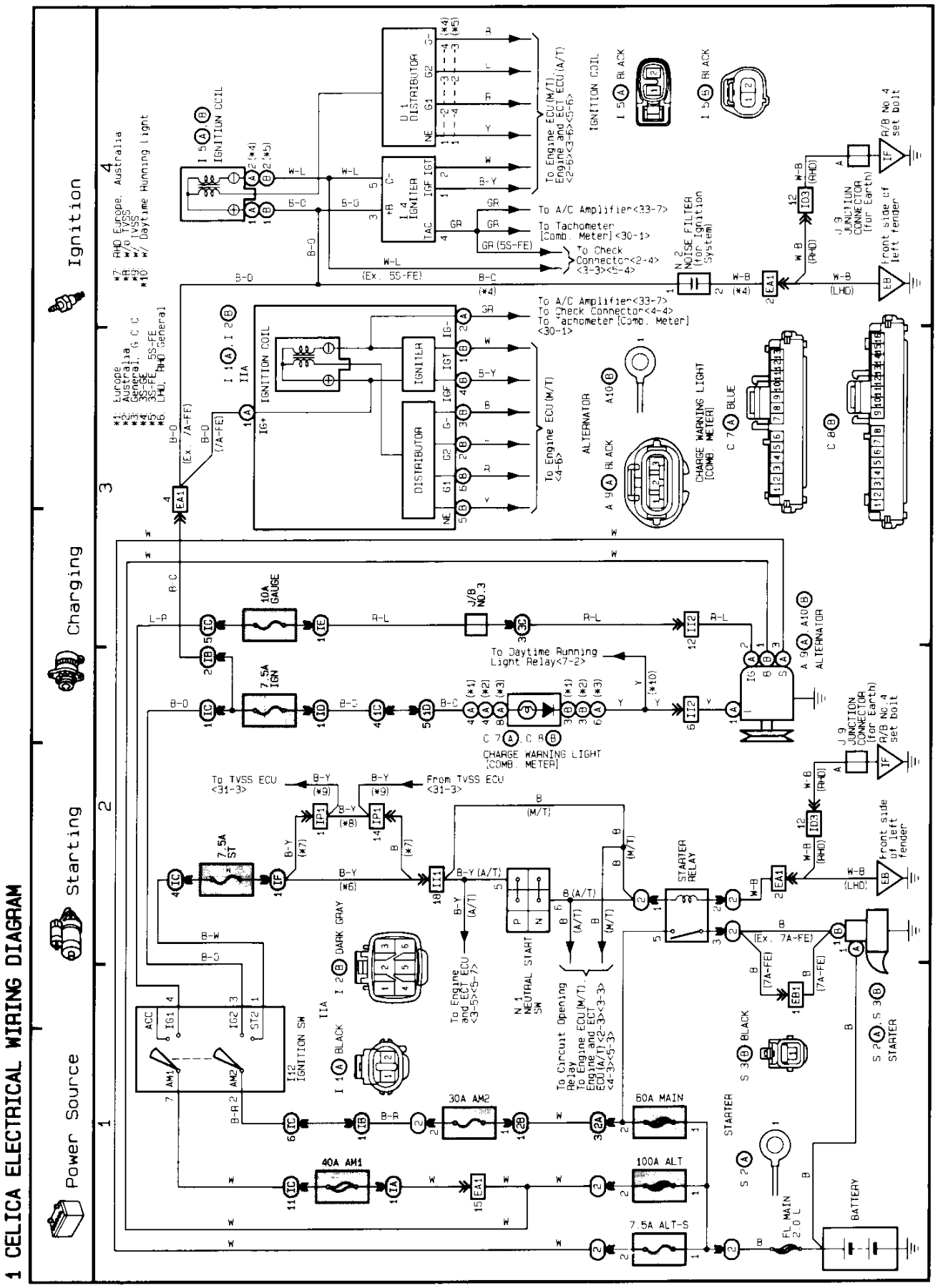

Downloaded from www.Manualslib.com manuals search engine

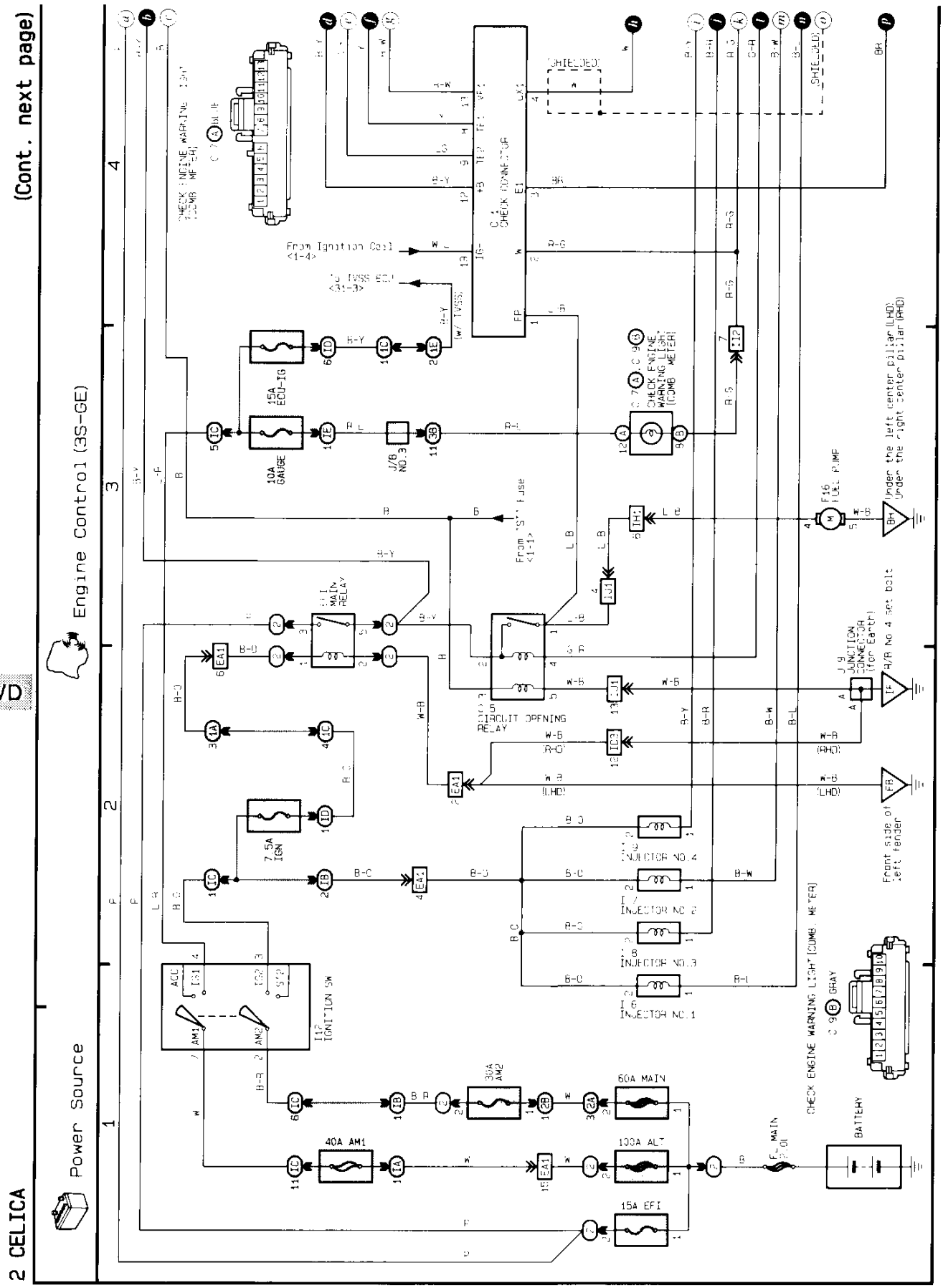

Downloaded from www.Manualslib.com manuals search engine

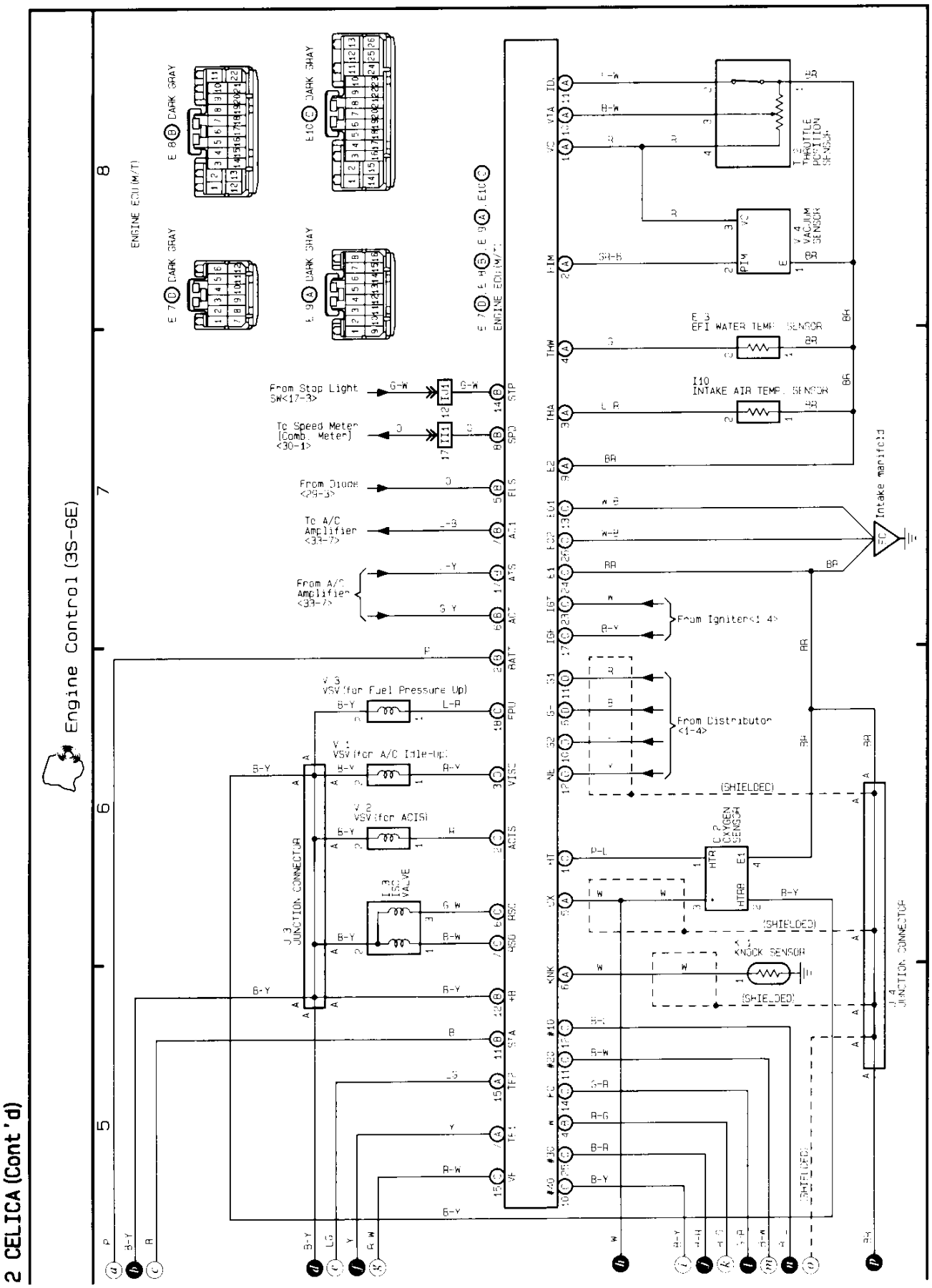

Downloaded from www.Manualslib.com manuals search engine

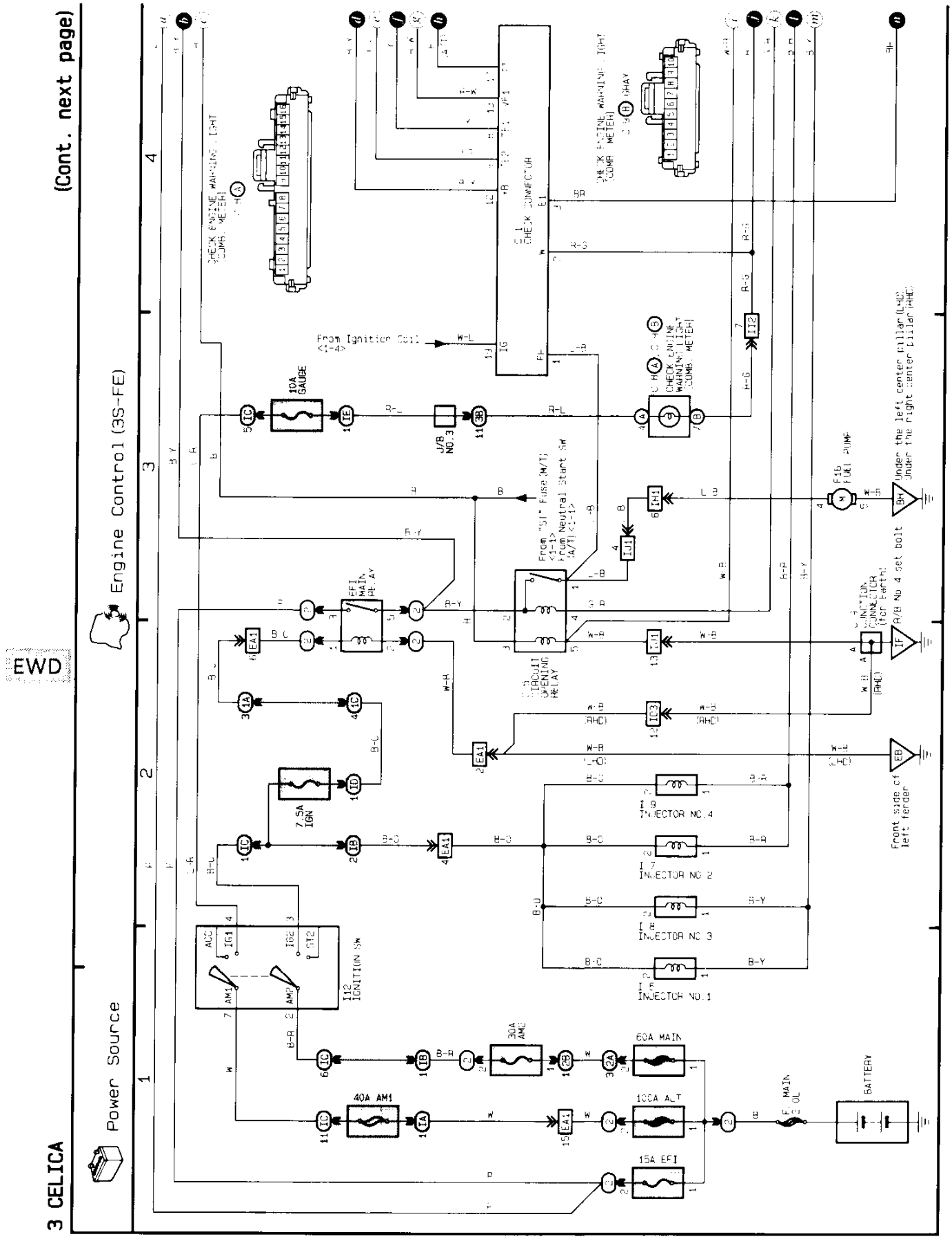

Downloaded from www.Manualslib.com manuals search engine

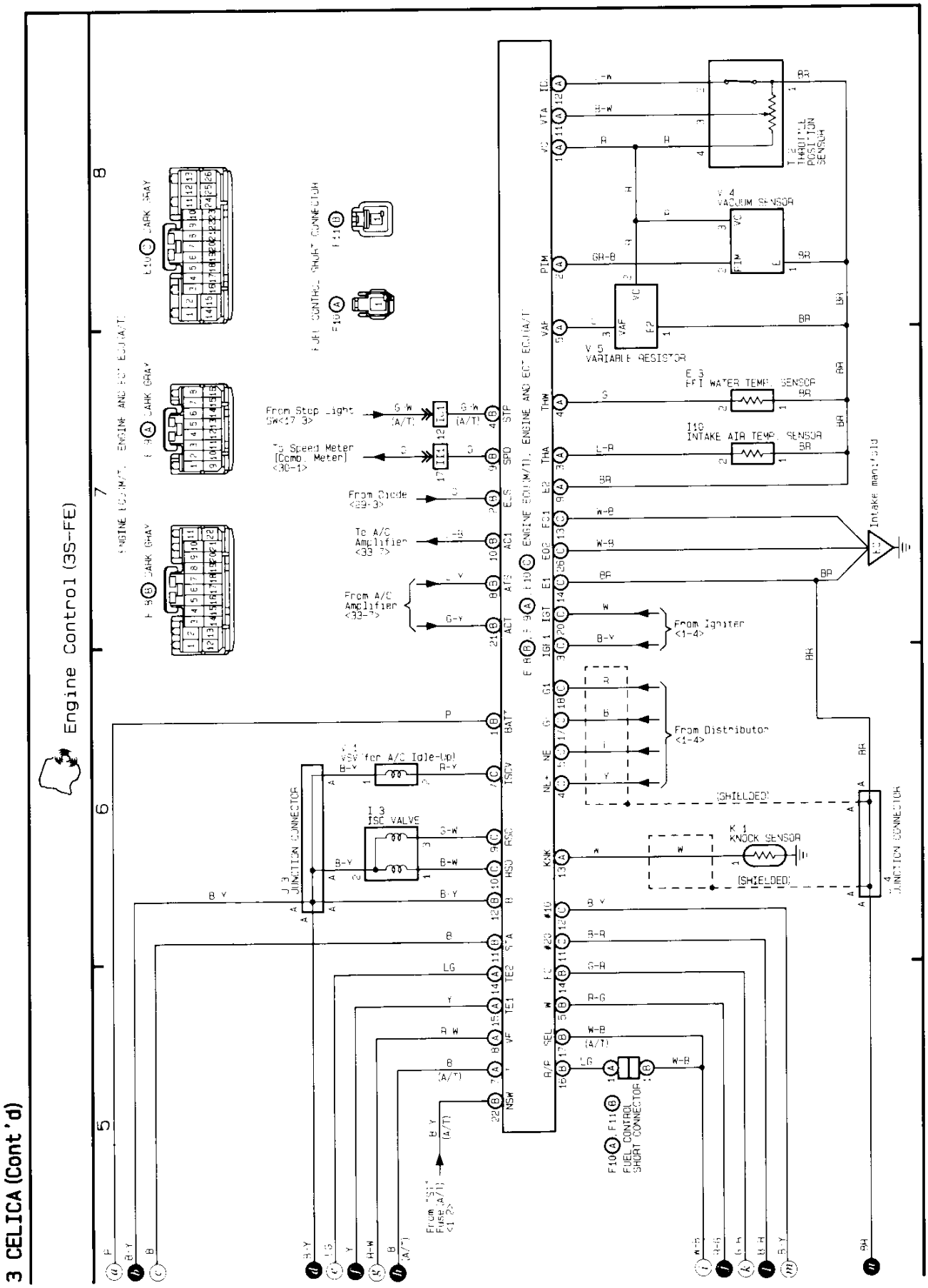

Downloaded from www.Manualslib.com manuals search engine

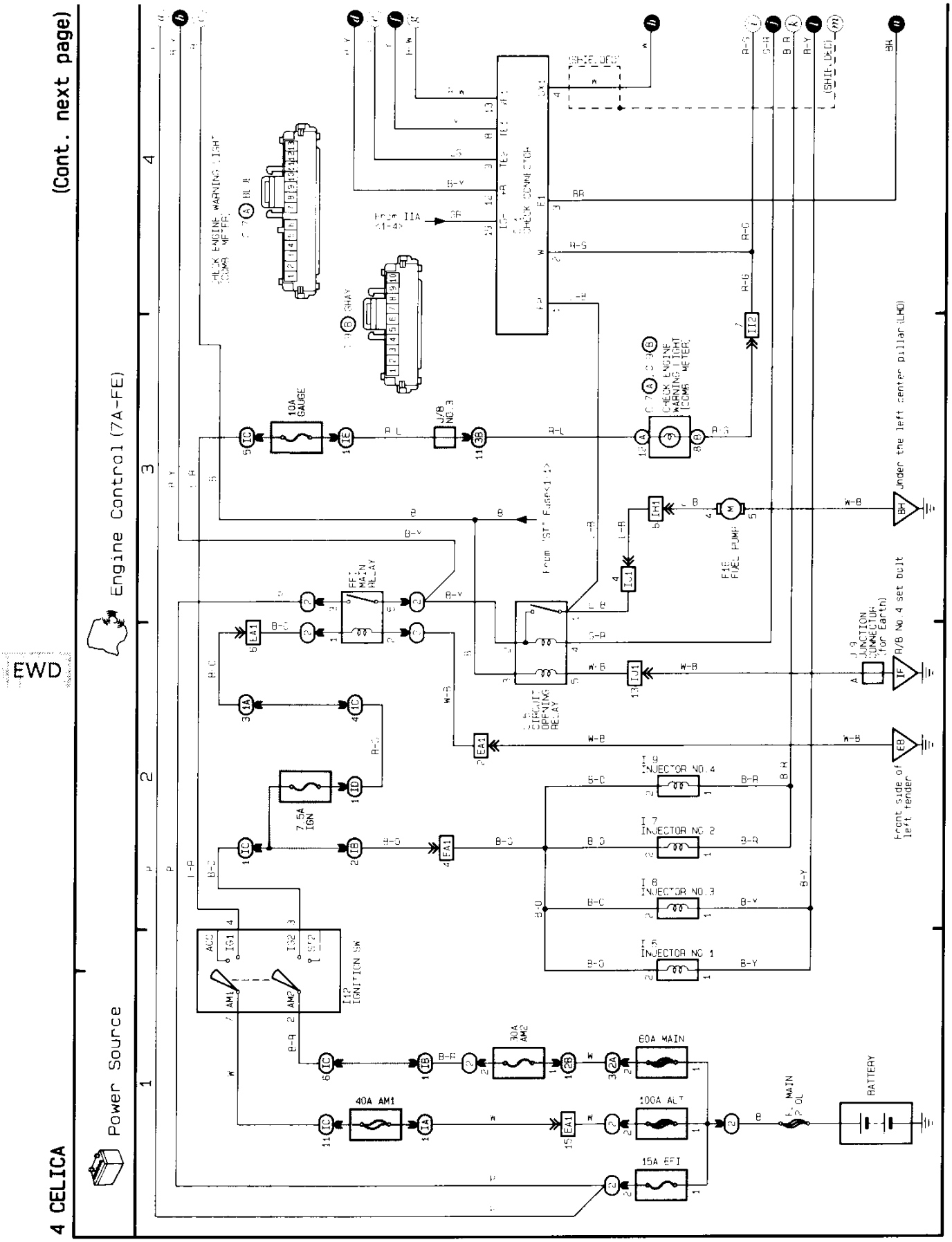

Downloaded from www.Manualslib.com manuals search engine

4 CELICA (Cont'd)

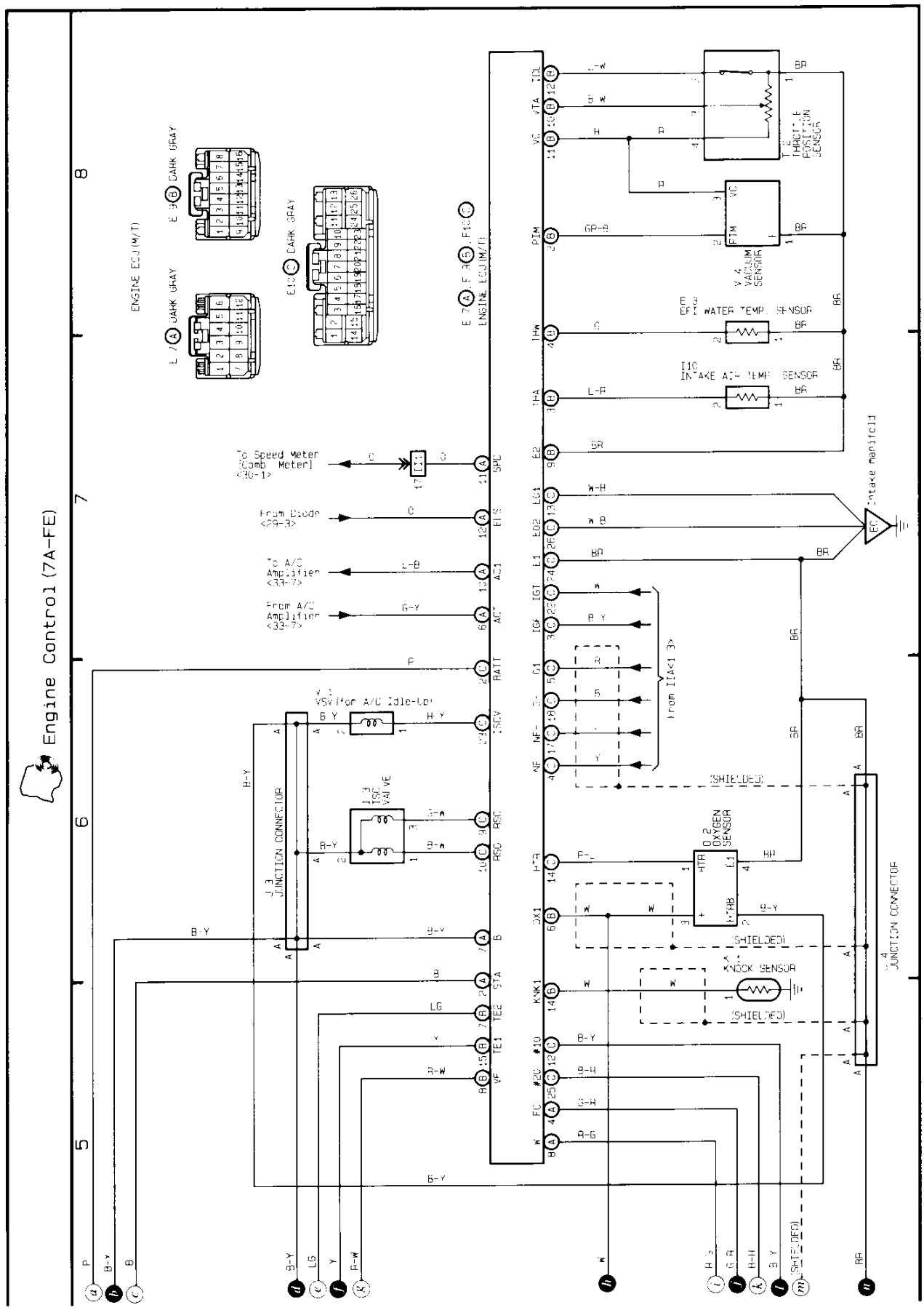

Downloaded from www.Manualslib.com manuals search engine

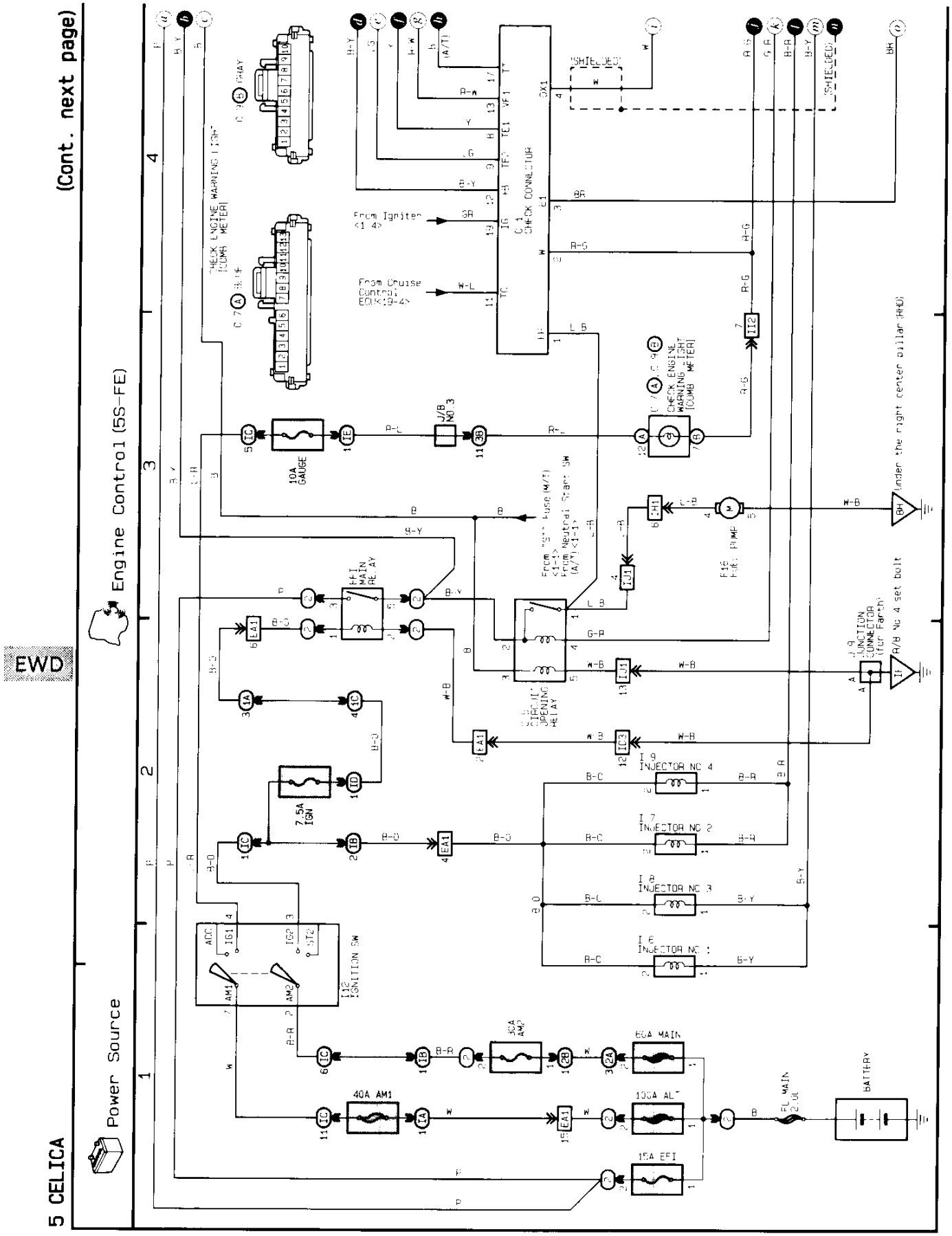

Downloaded from www.Manualslib.com manuals search engine

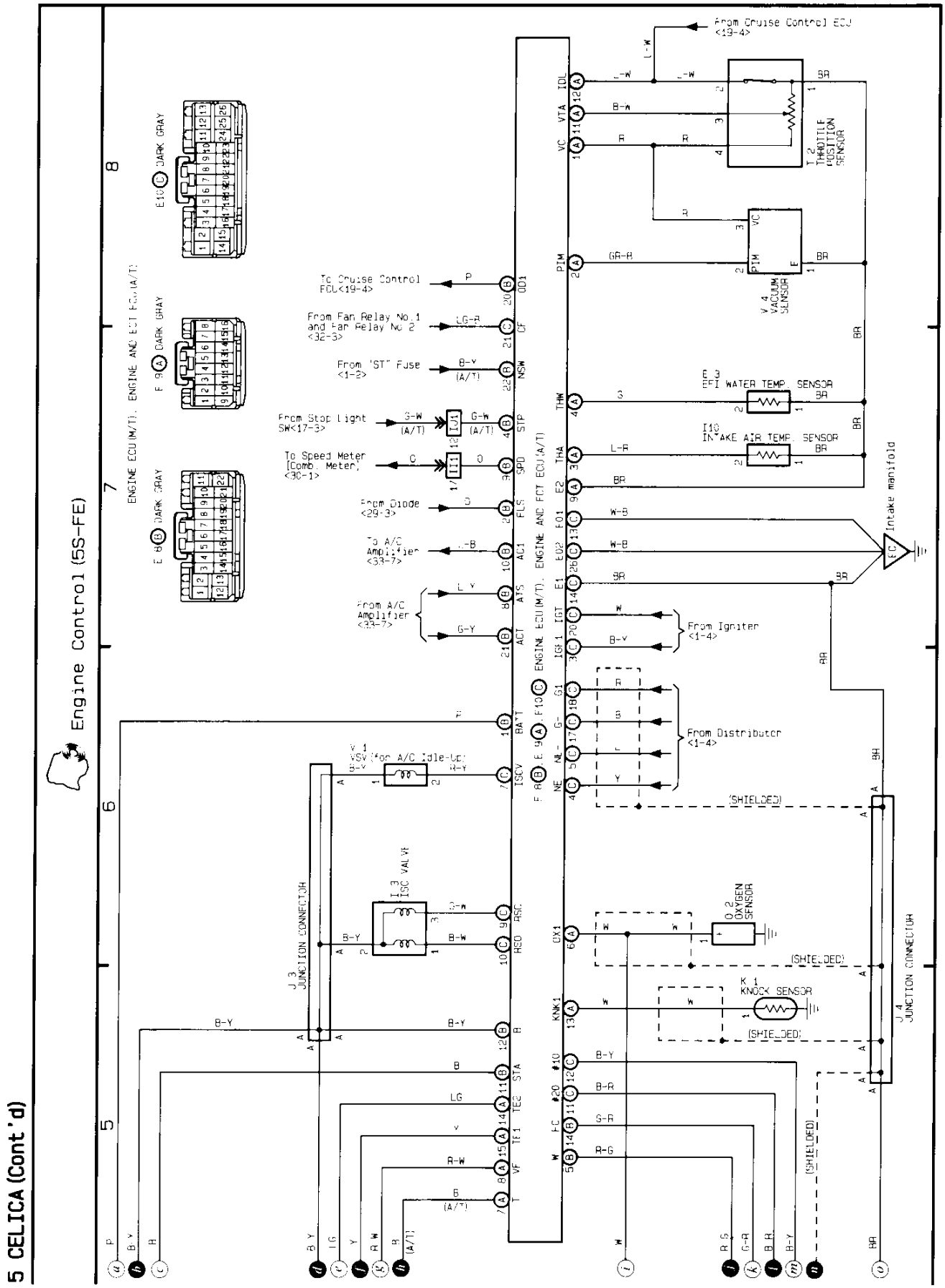

Downloaded from www.Manualslib.com manuals search engine

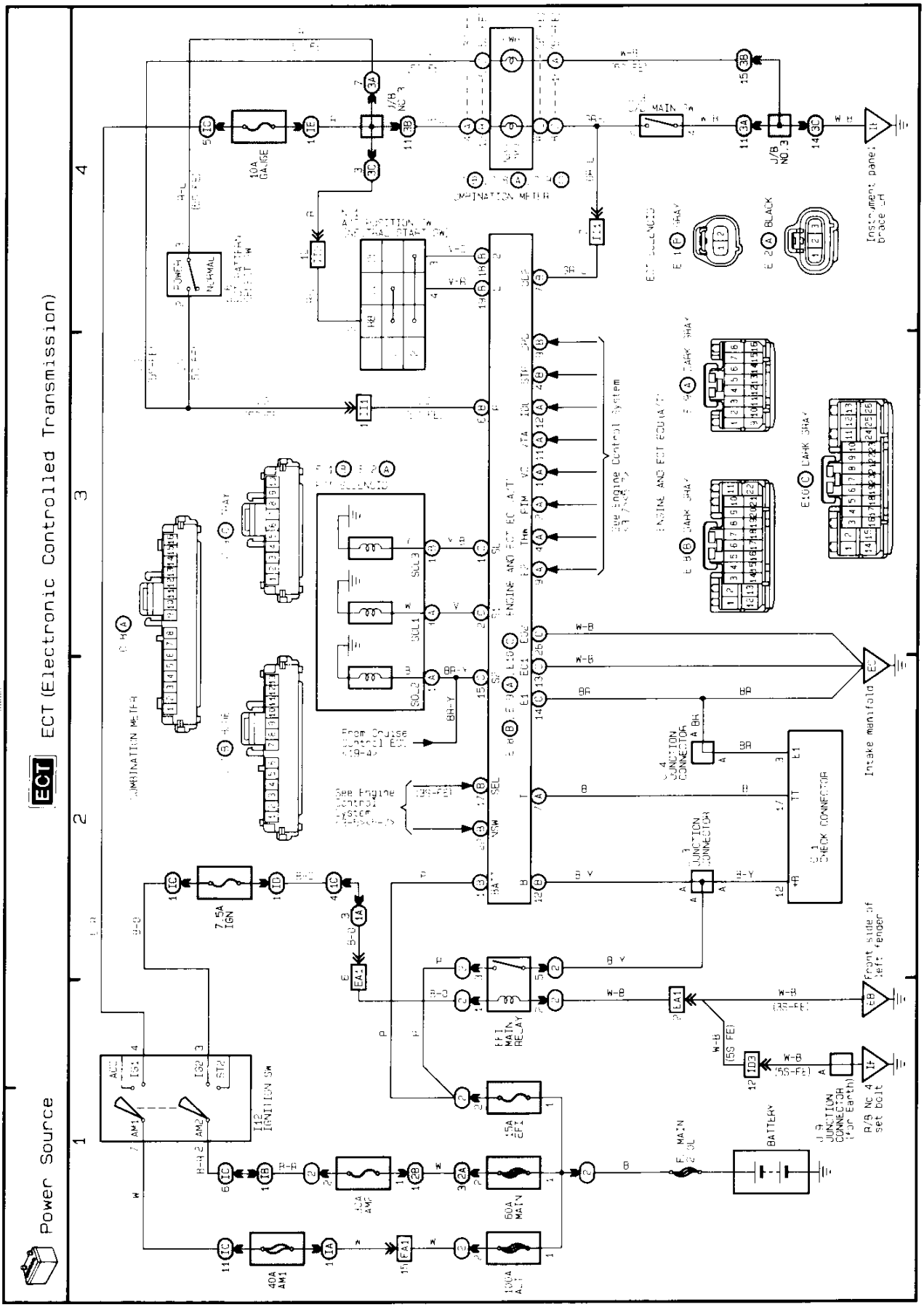

Downloaded from www.Manualslib.com manuals search engine

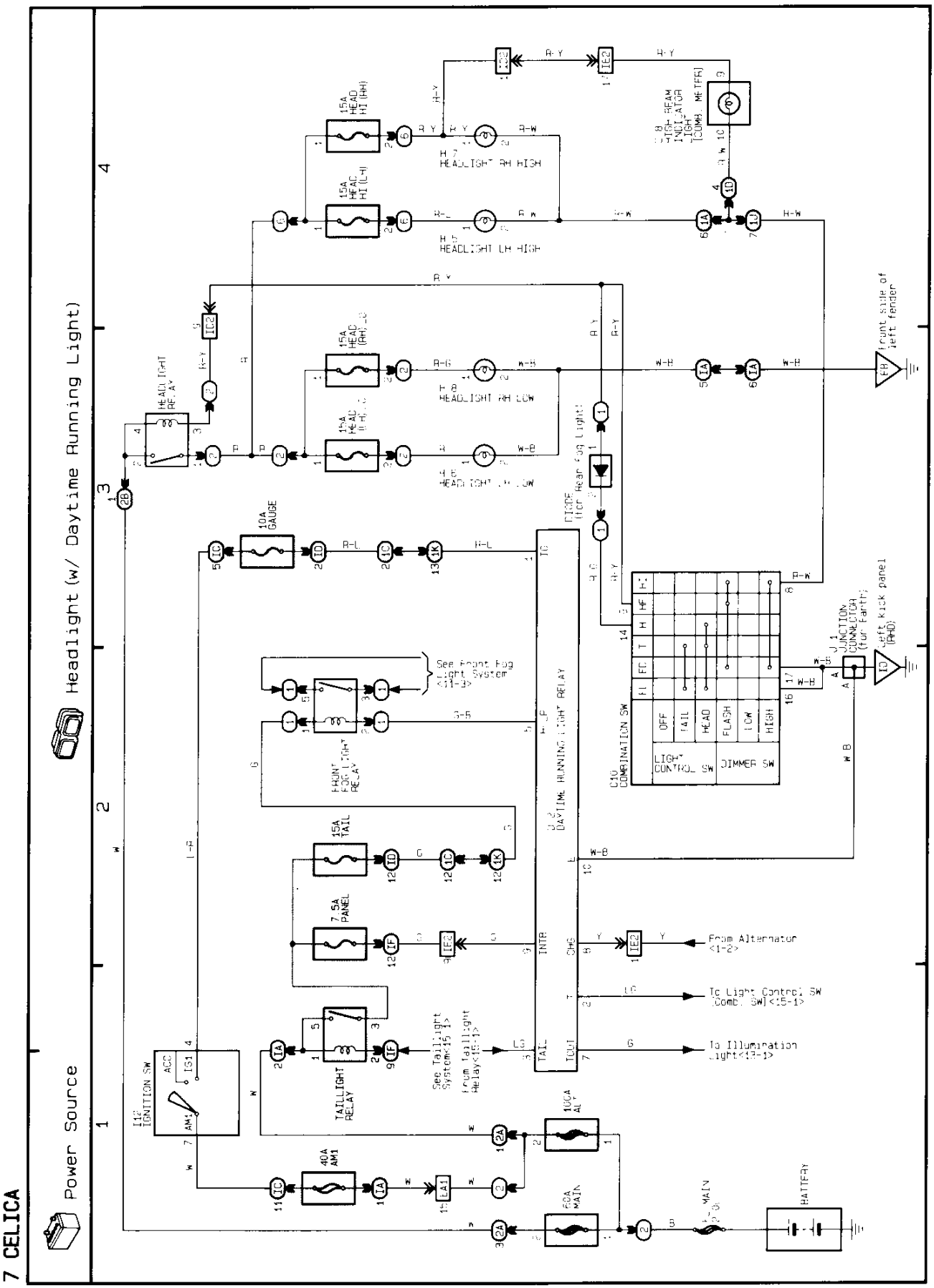

Downloaded from www.Manualslib.com manuals search engine

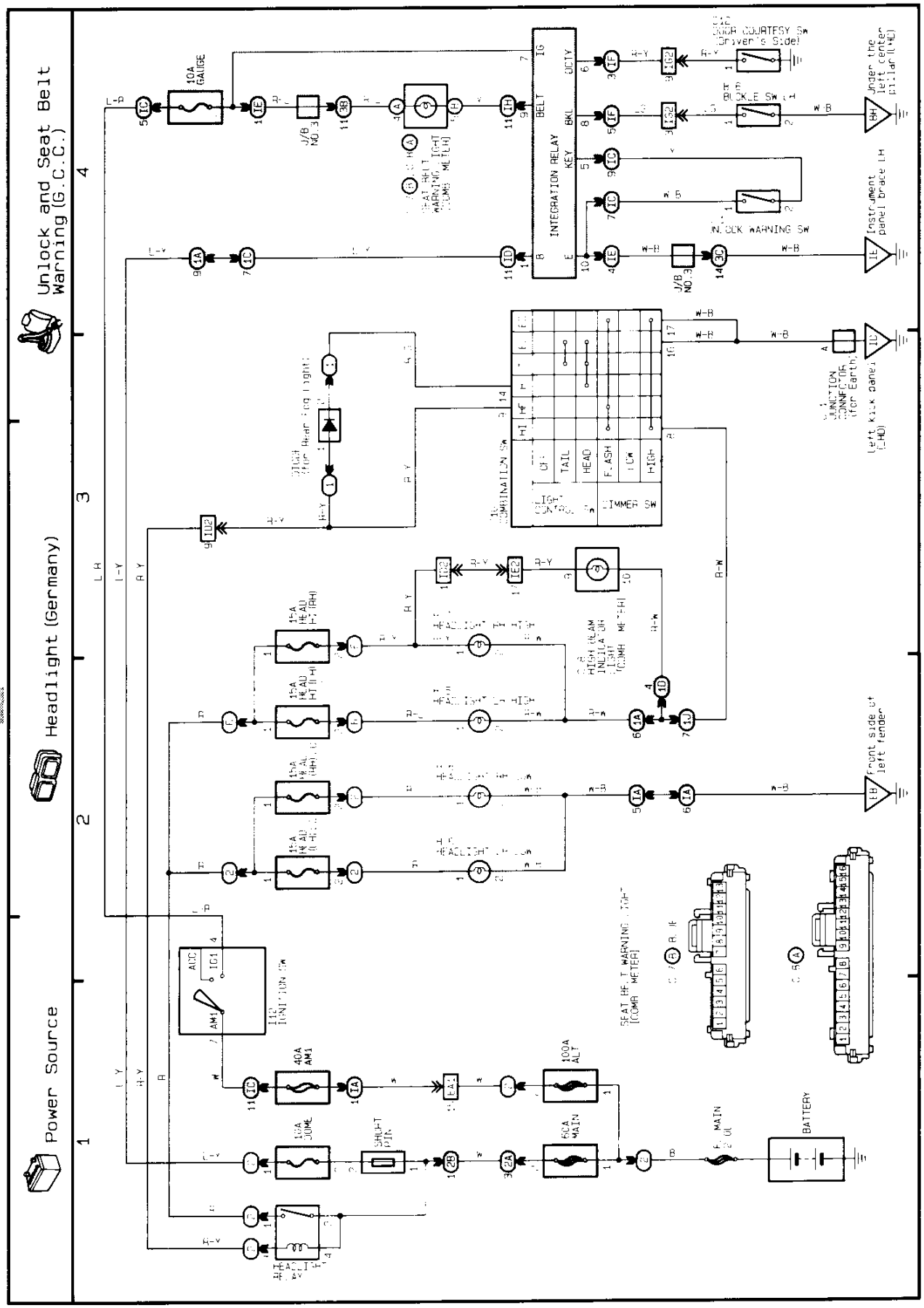

EWD

8 CELICA

Downloaded from www.Manualslib.com manuals search engine

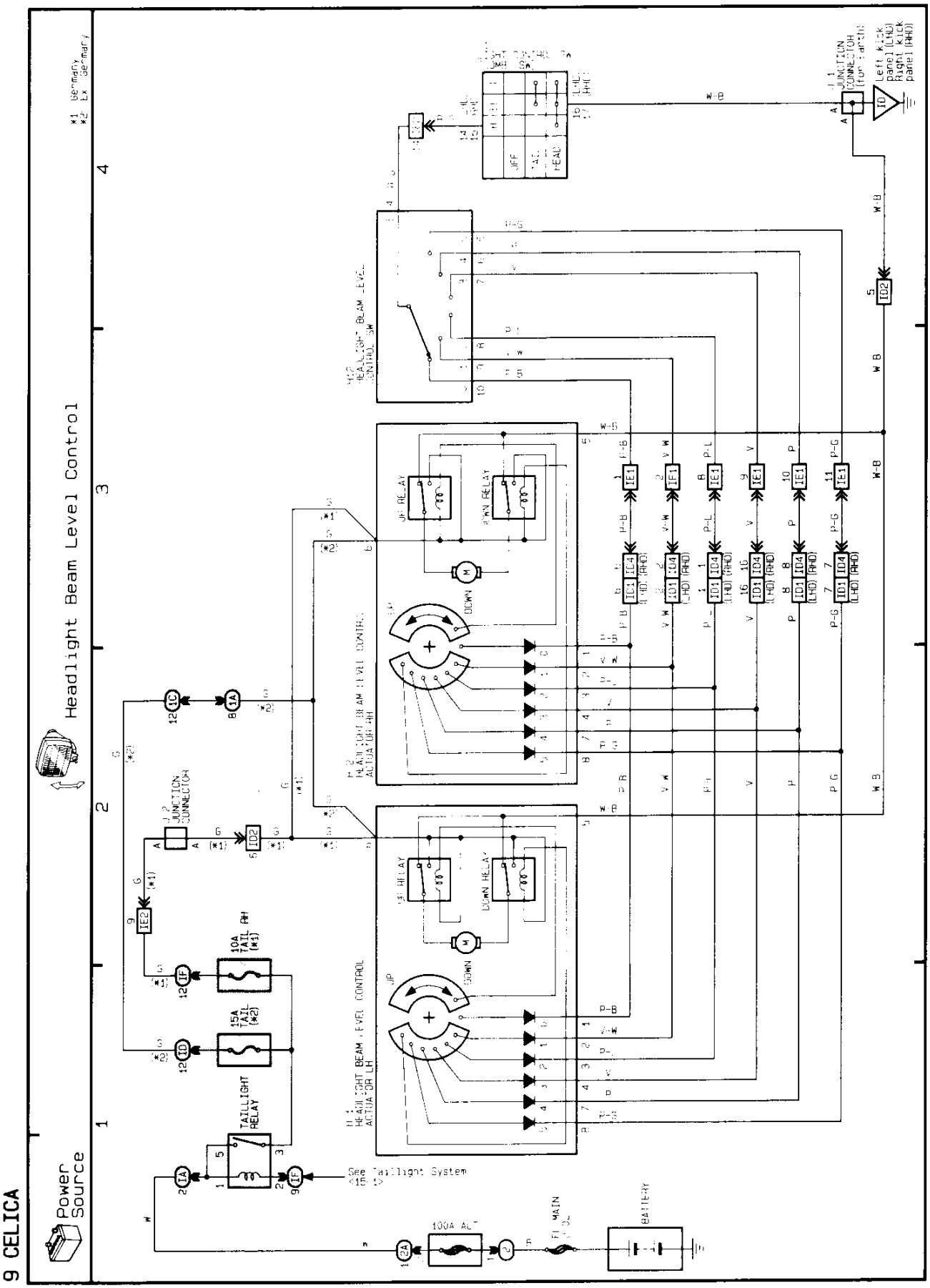

EWD

Downloaded from www.Manualslib.com manuals search engine

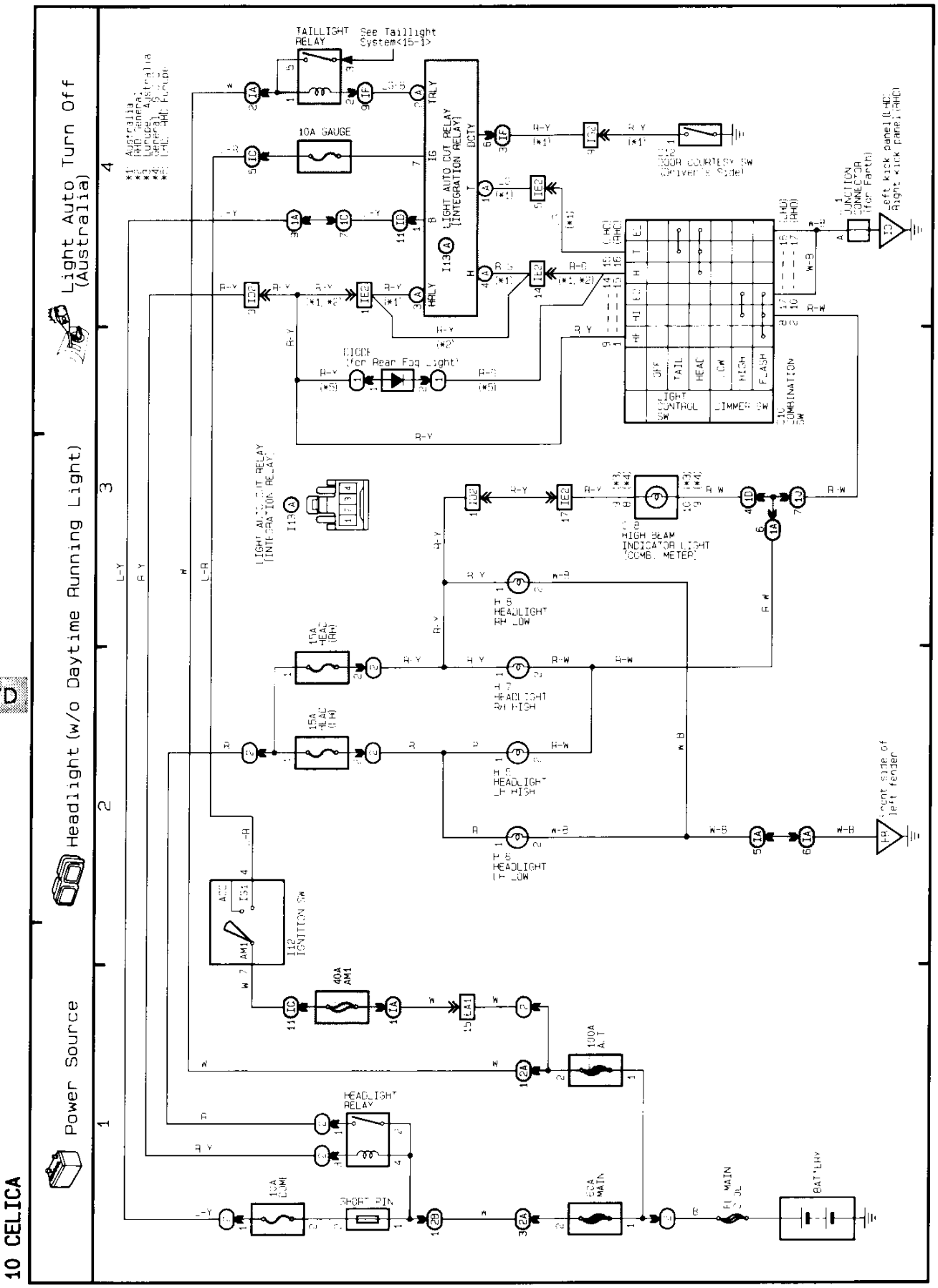

Downloaded from www.Manualslib.com manuals search engine

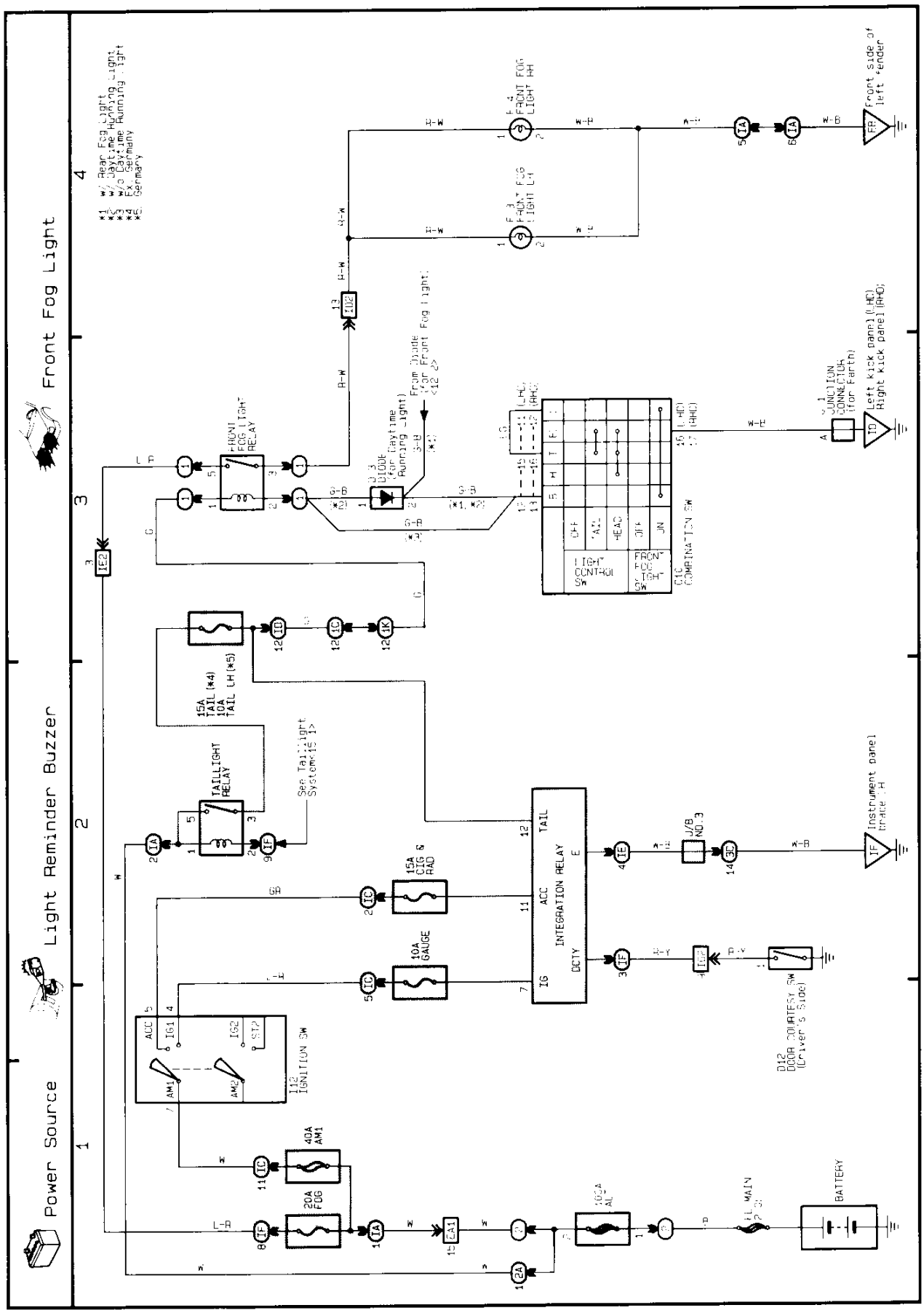

EWD

Downloaded from www.Manualslib.com manuals search engine

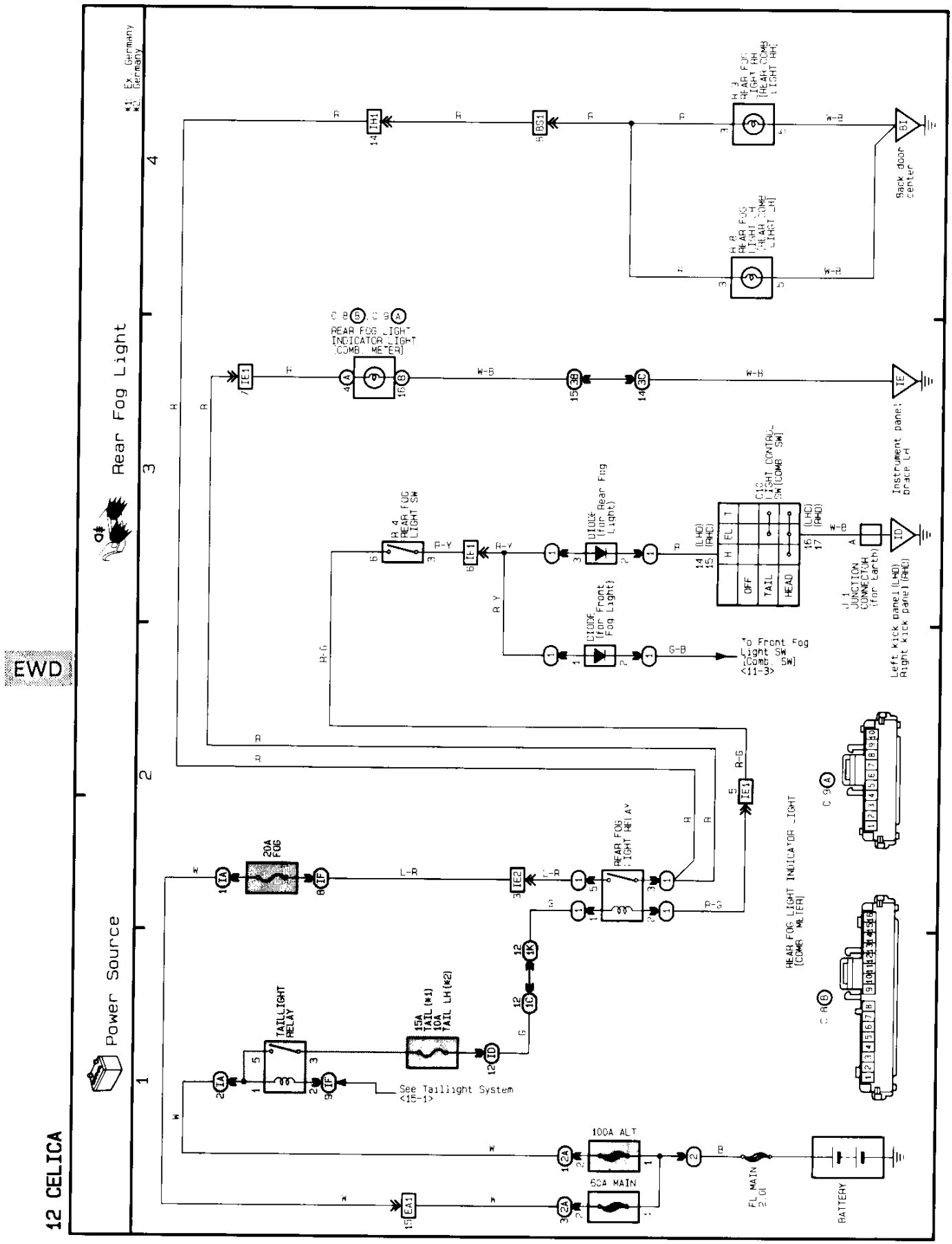

Downloaded from www.Manualslib.com manuals search engine

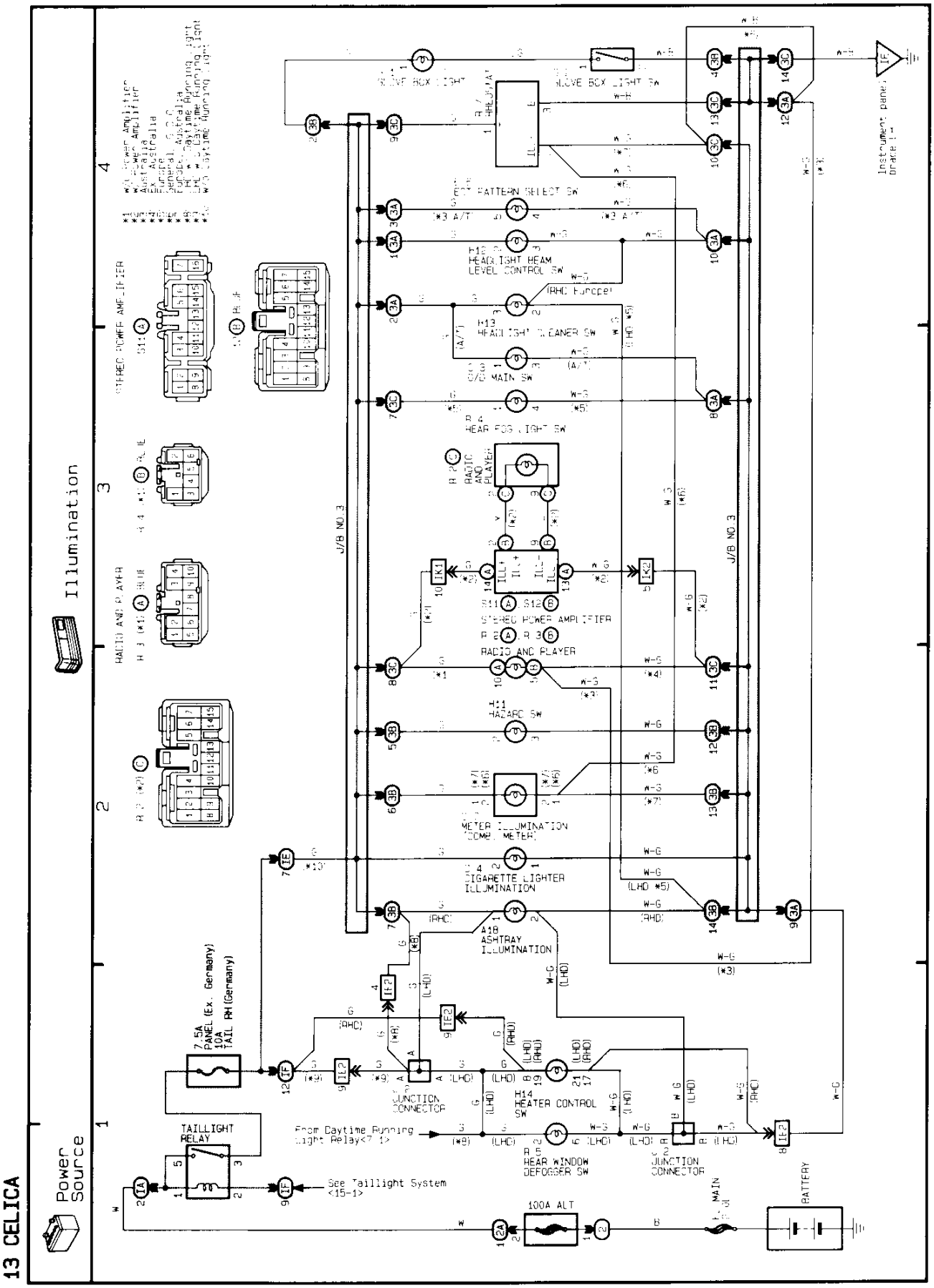

Downloaded from www.Manualslib.com manuals search engine

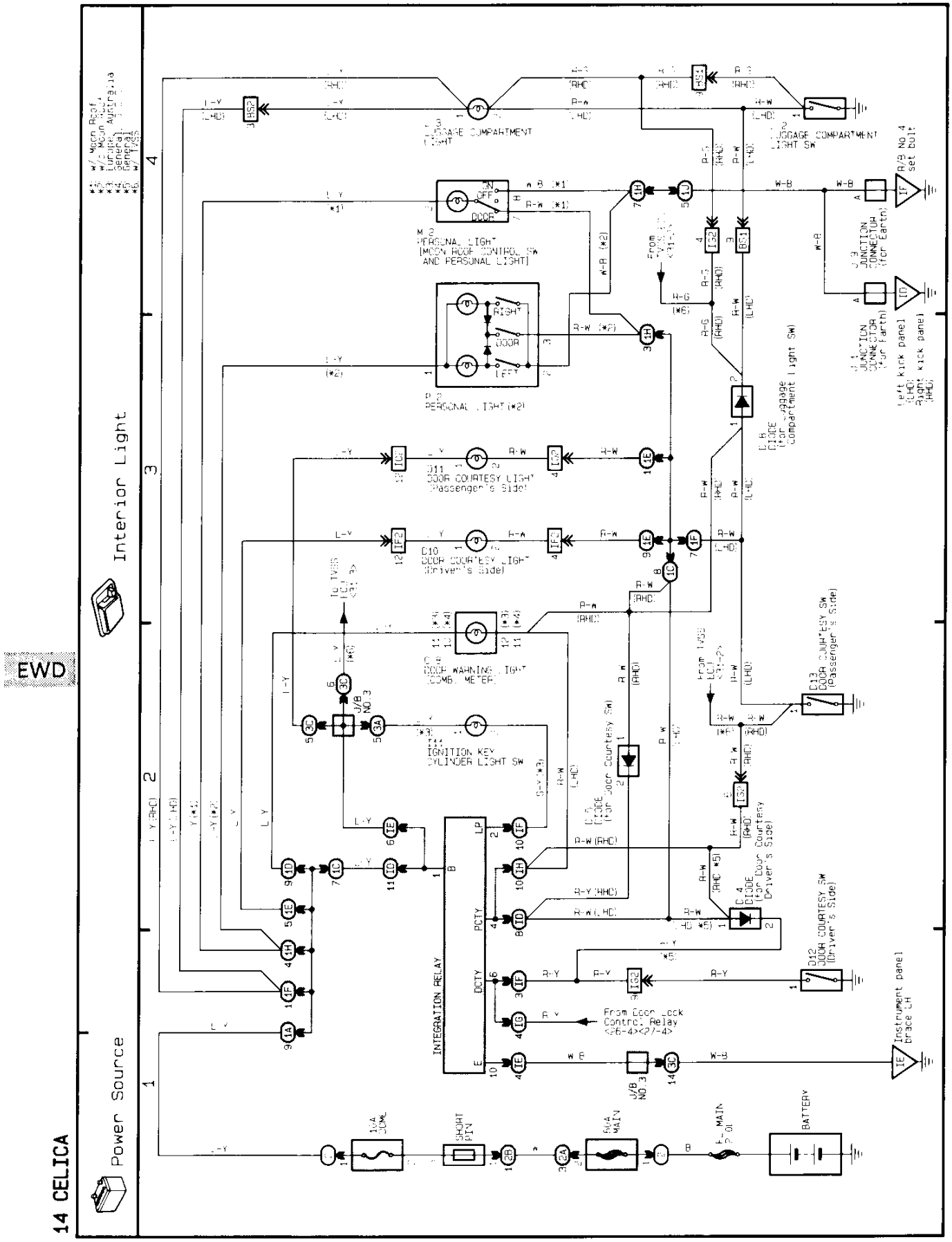

Downloaded from www.Manualslib.com manuals search engine

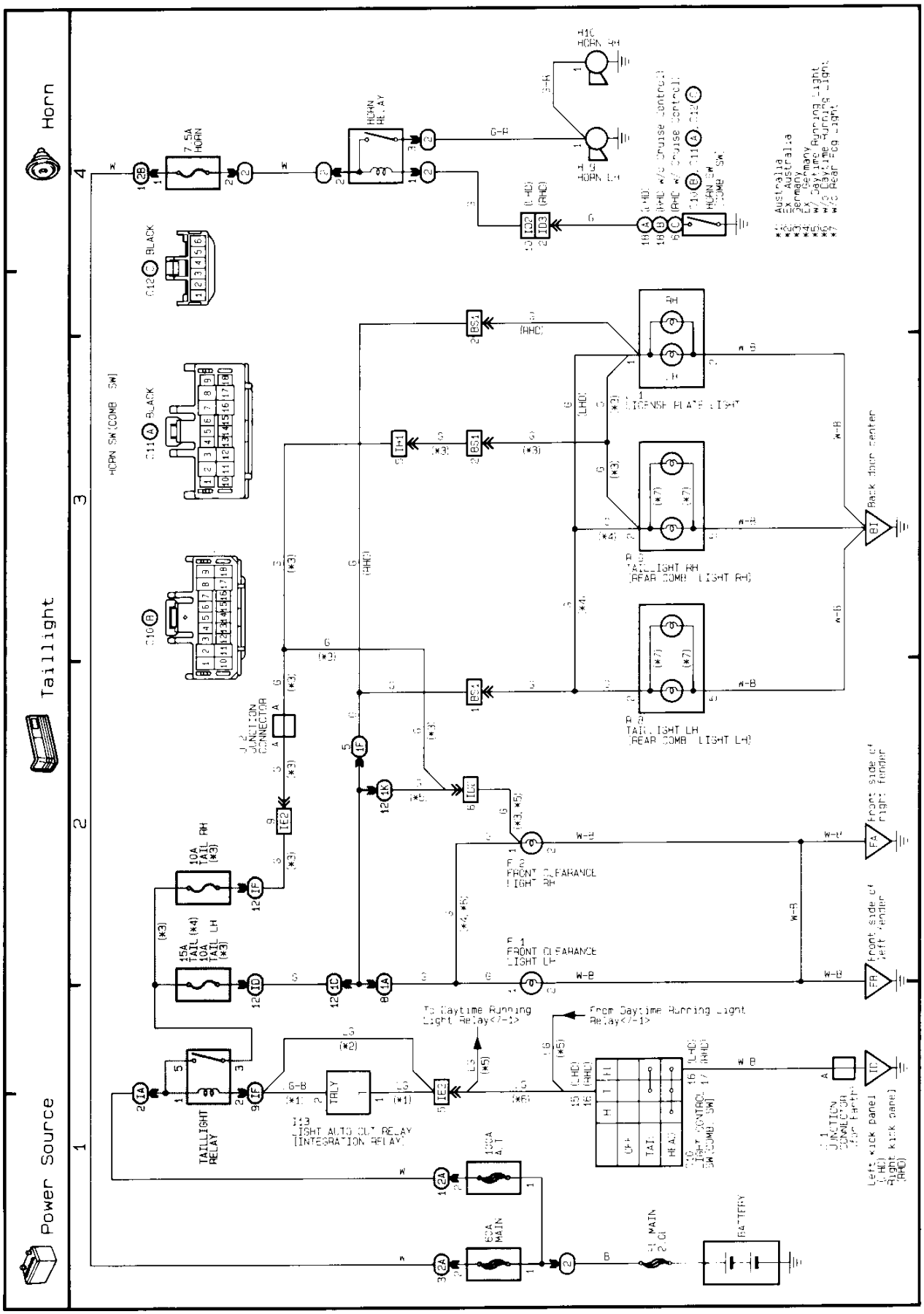

15 CELICA

EWD

Downloaded from www.Manualslib.com manuals search engine

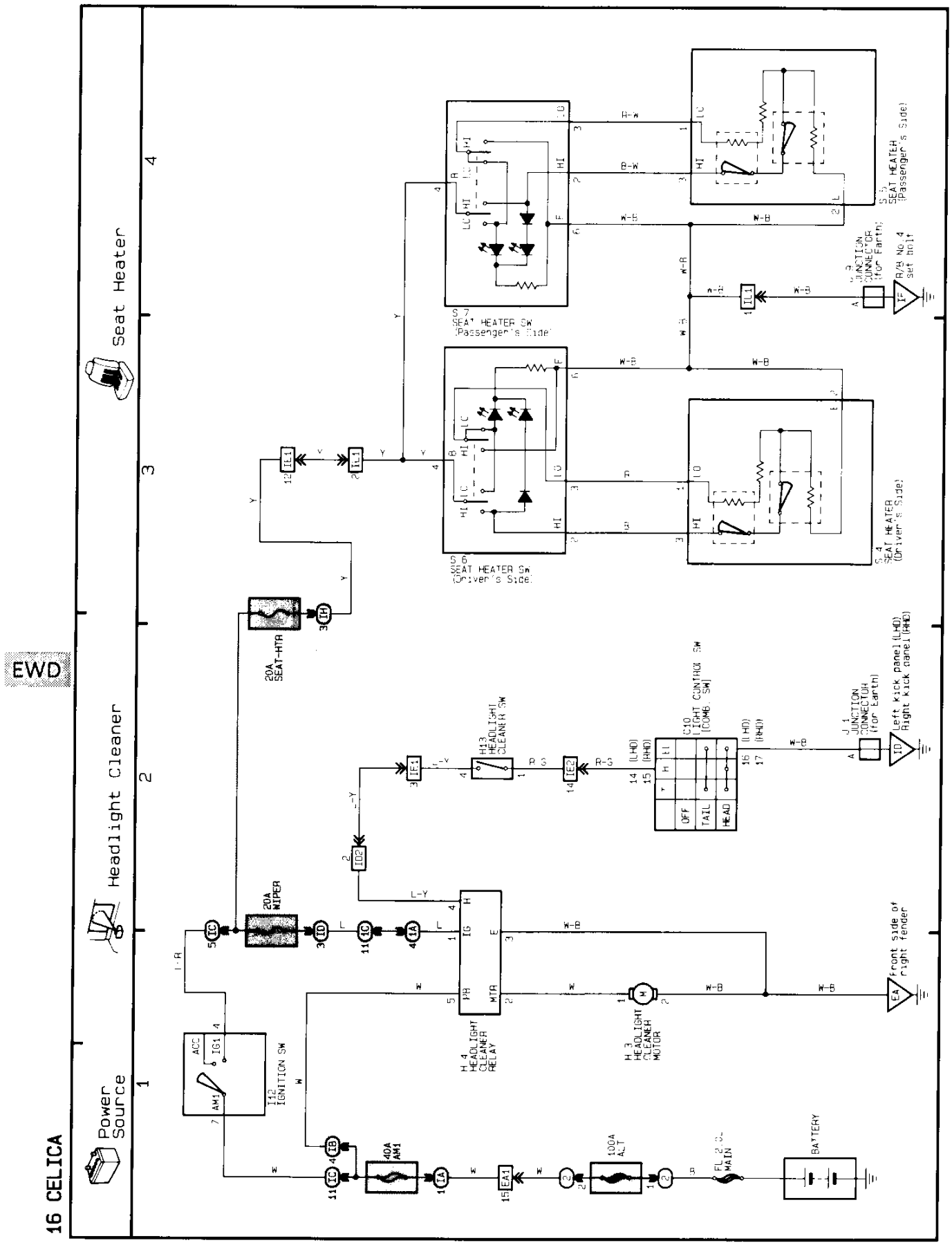

Downloaded from www.Manualslib.com manuals search engine

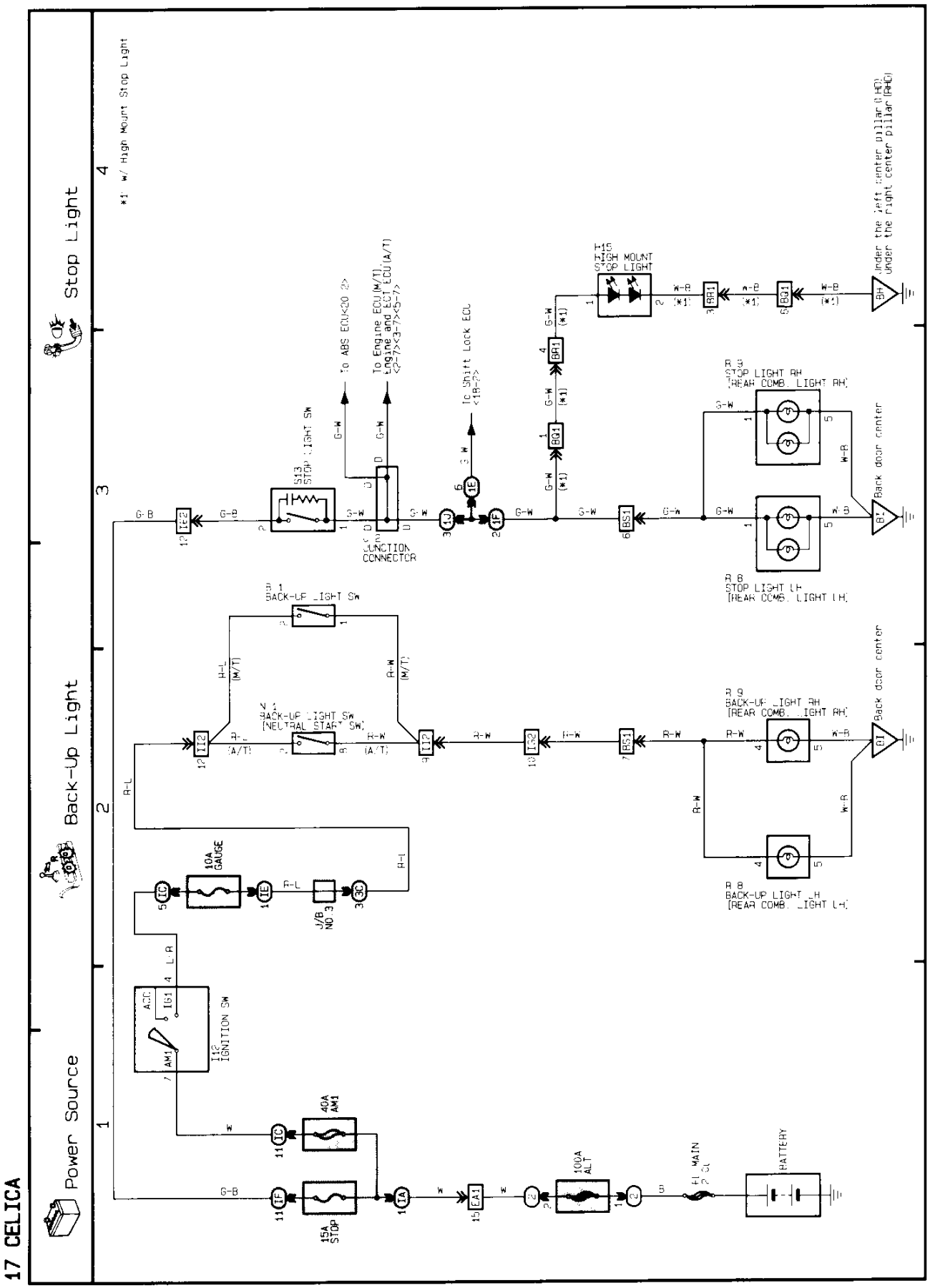

EWD

Downloaded from www.Manualslib.com manuals search engine

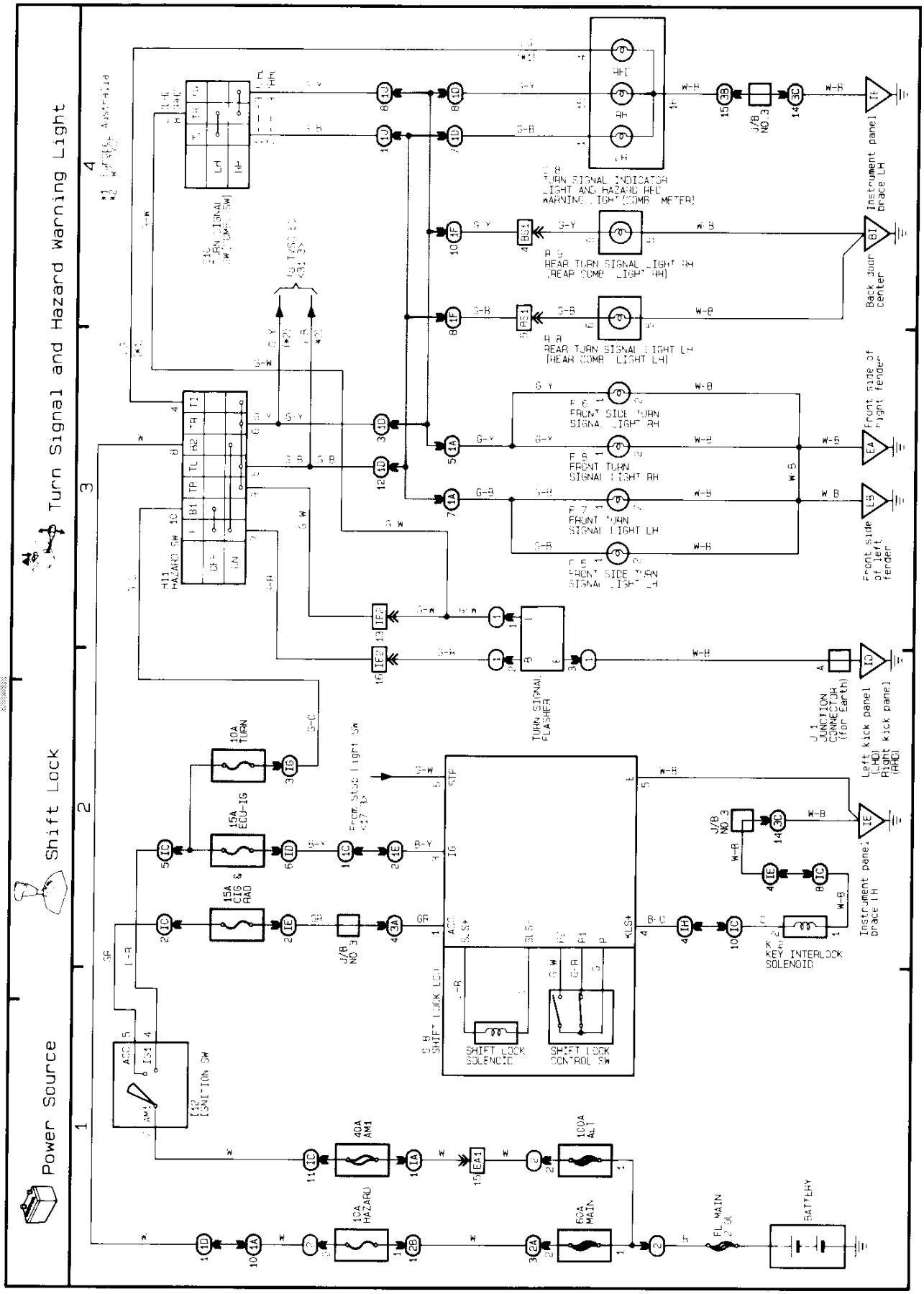

Downloaded from www.Manualslib.com manuals search engine

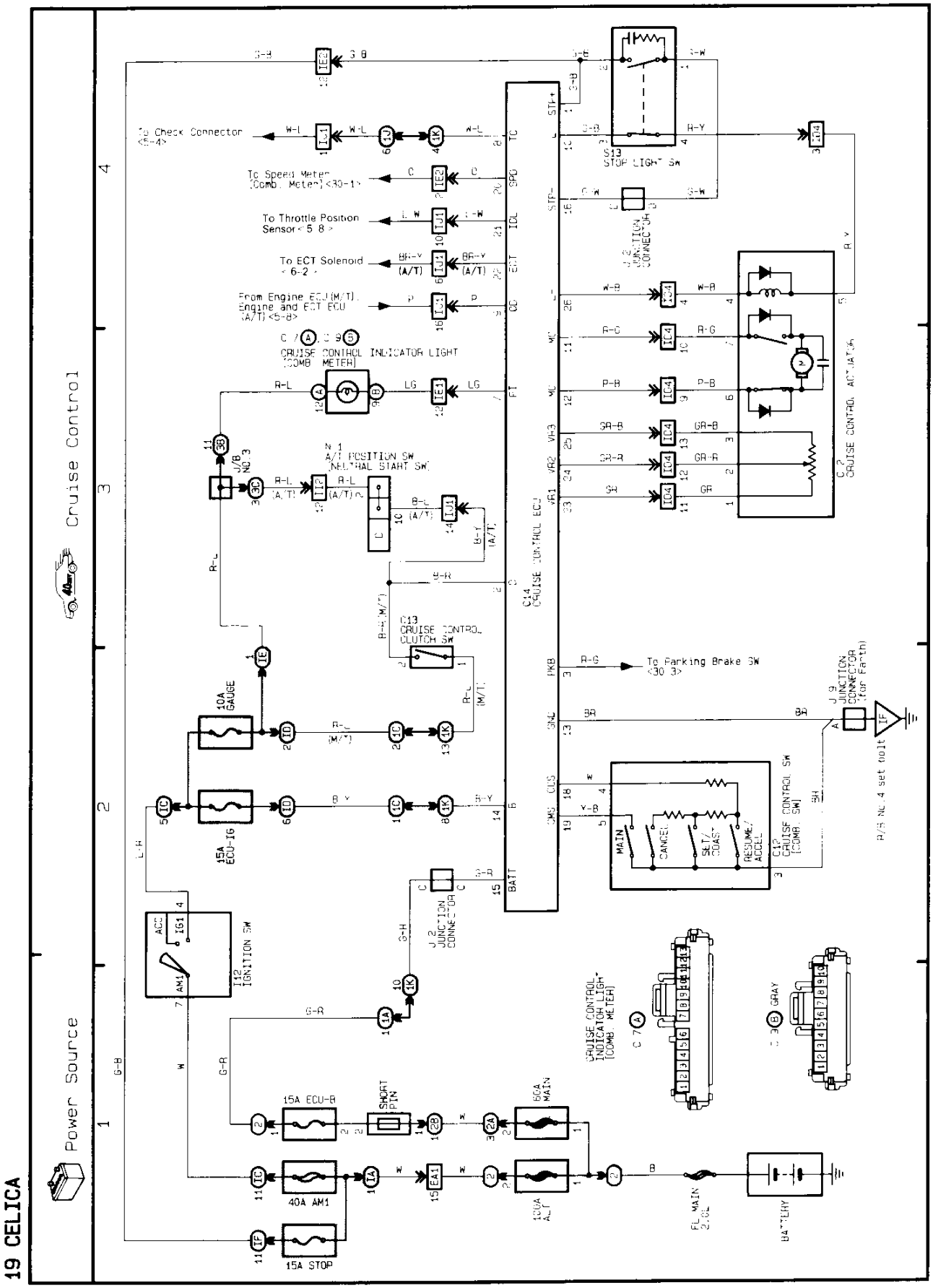

Downloaded from www.Manualslib.com manuals search engine

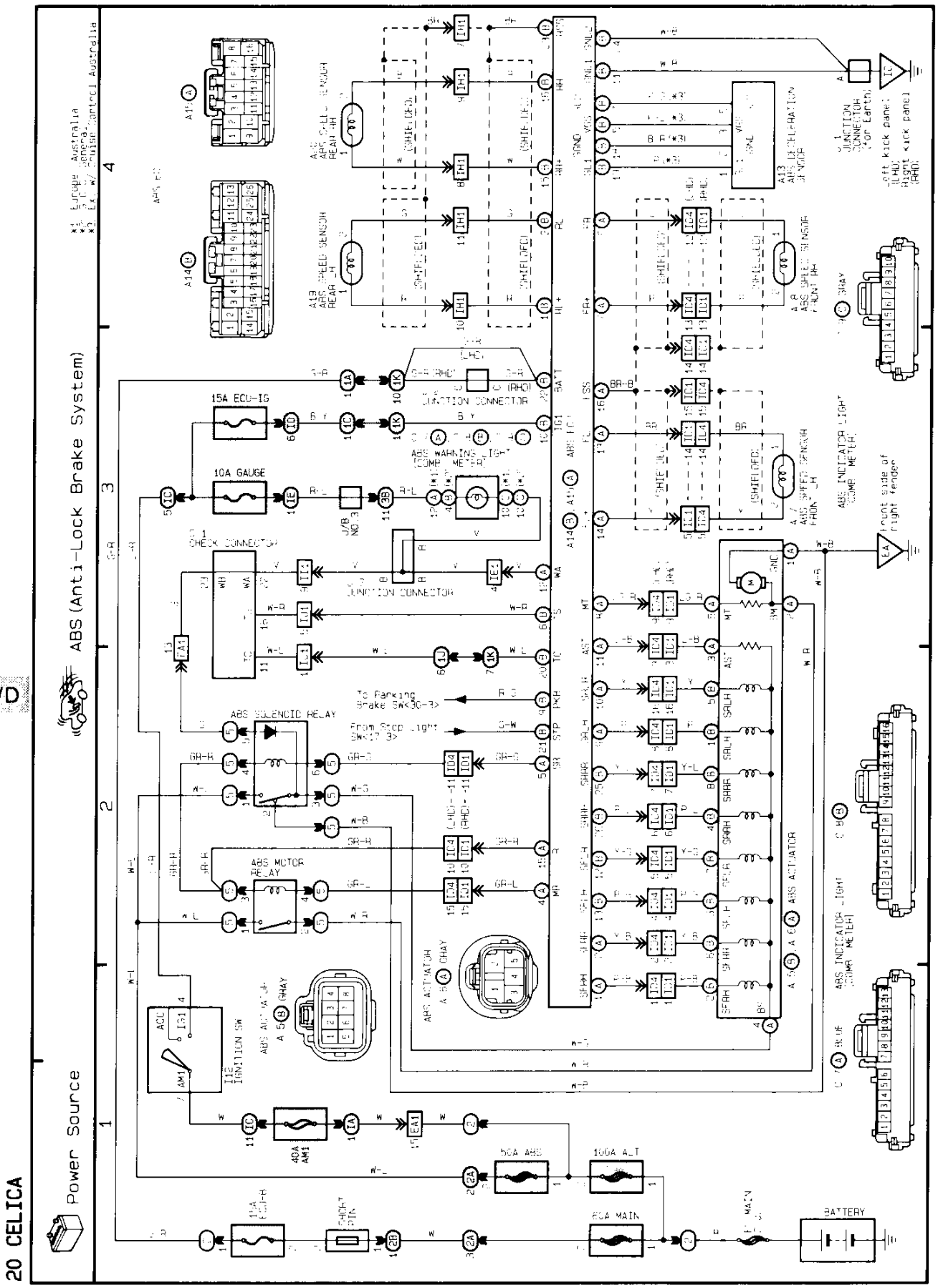

Downloaded from www.Manualslib.com manuals search engine

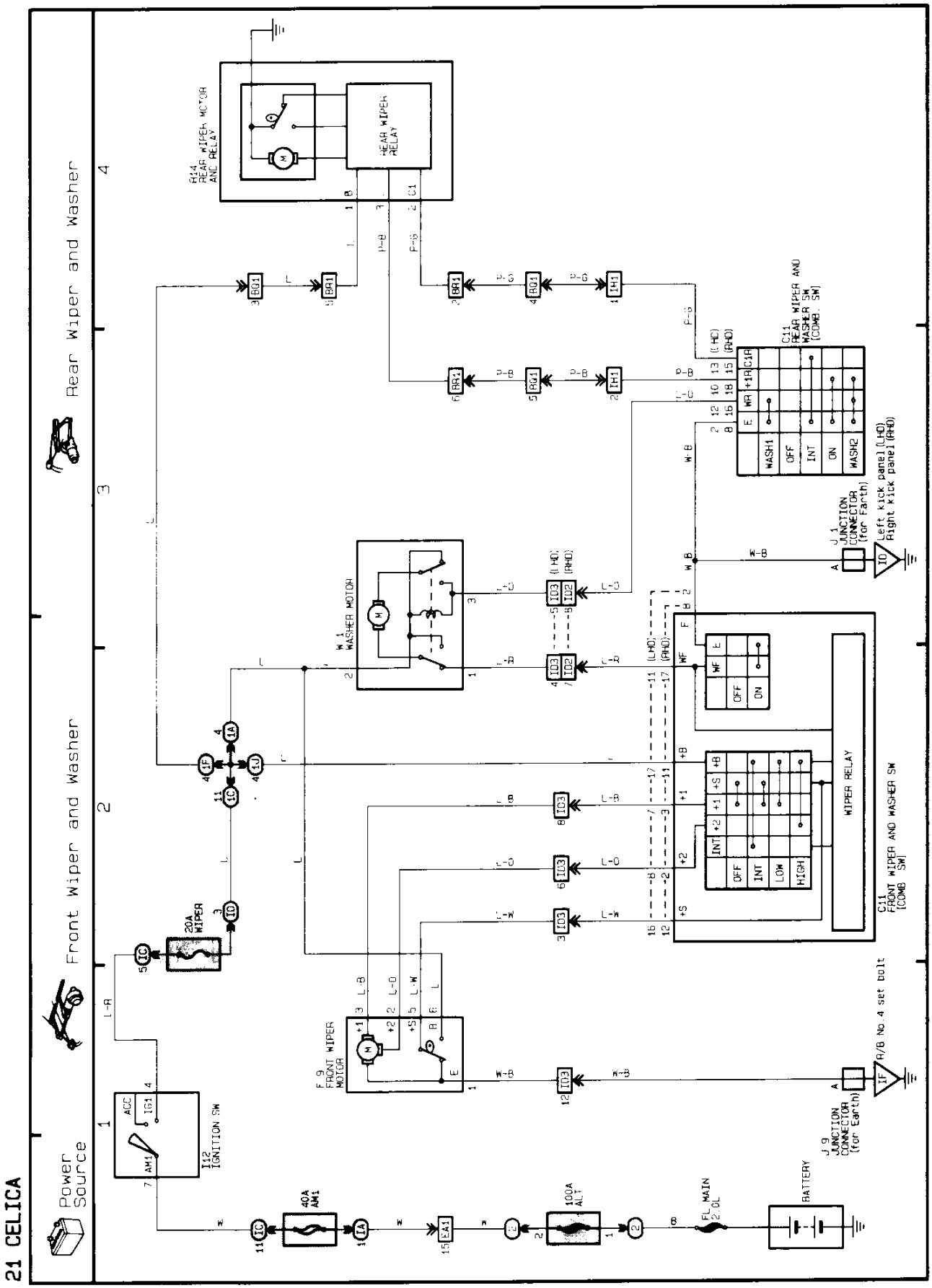

EWD

Downloaded from www.Manualslib.com manuals search engine

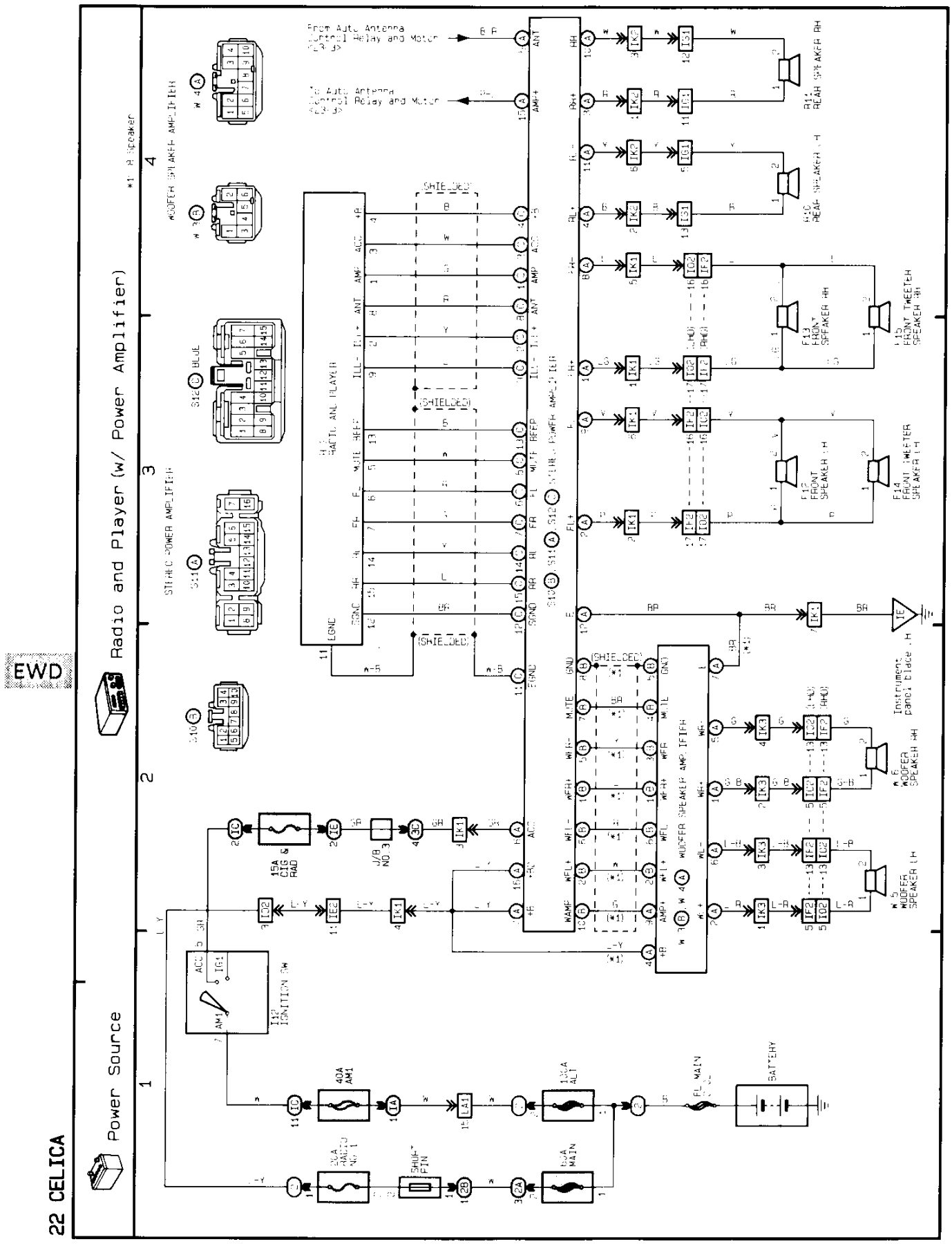

Downloaded from www.Manualslib.com manuals search engine

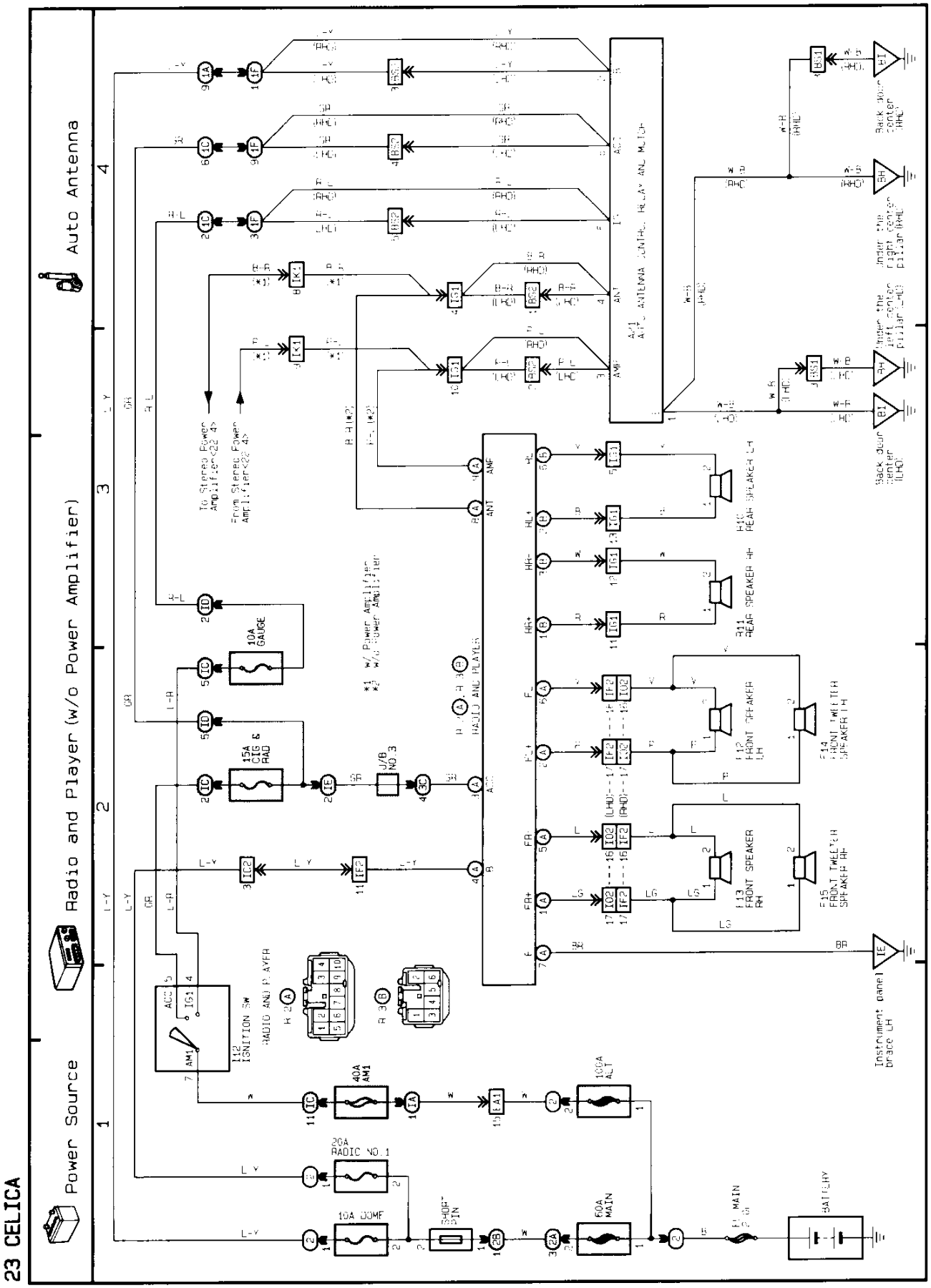

Downloaded from www.Manualslib.com manuals search engine

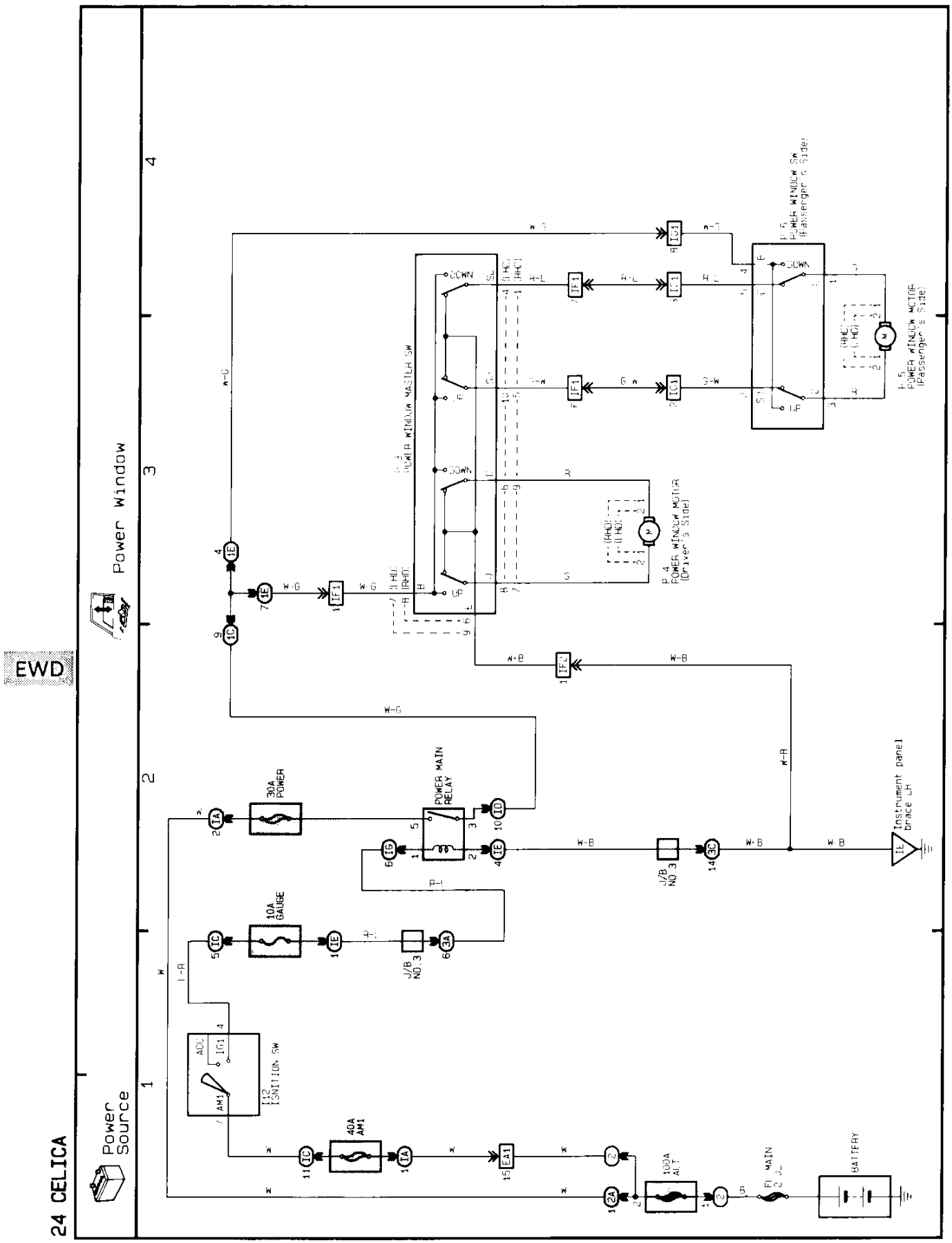

Downloaded from www.Manualslib.com manuals search engine

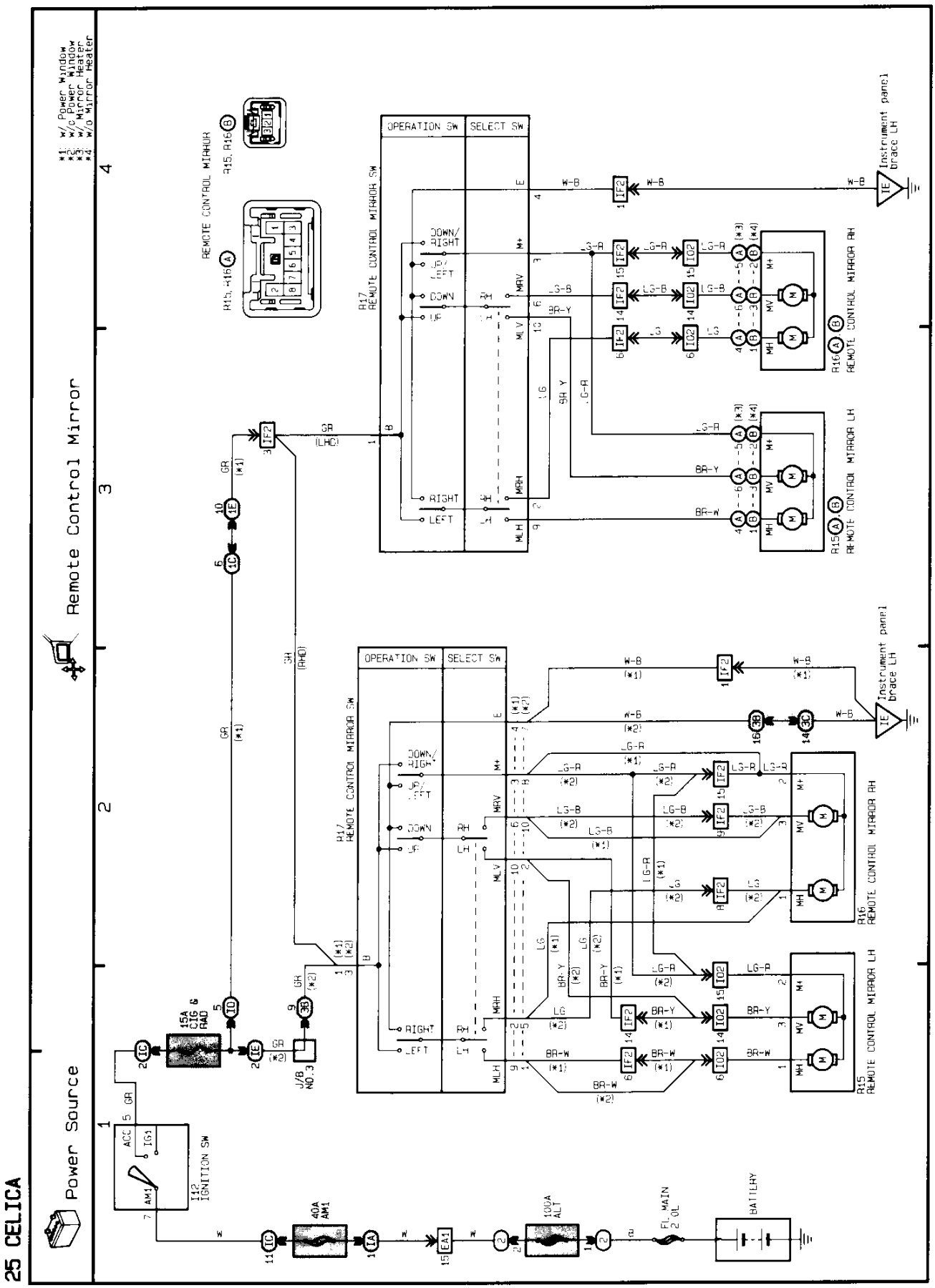

EWD

Downloaded from www.Manualslib.com manuals search engine

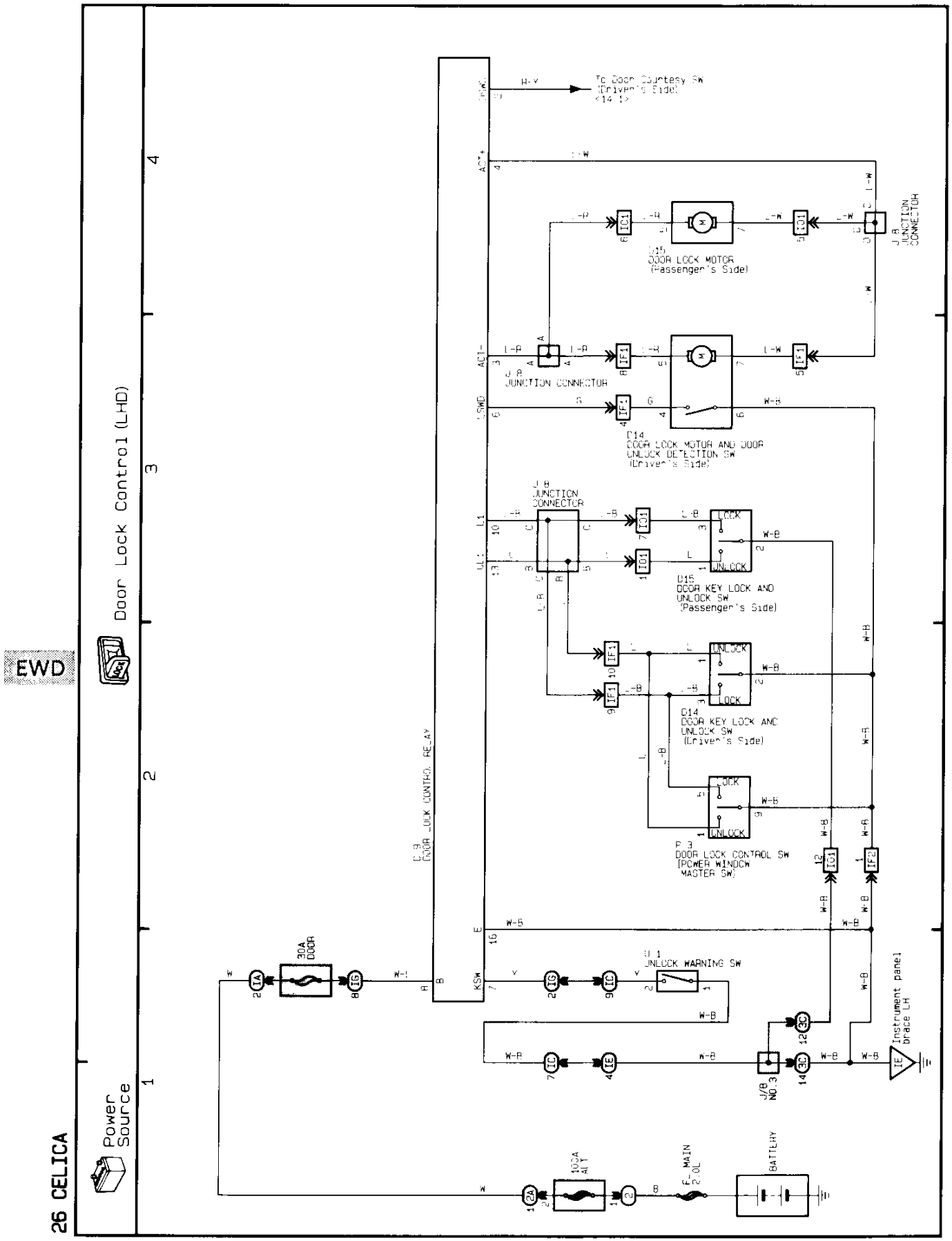

Downloaded from www.Manualslib.com manuals search engine

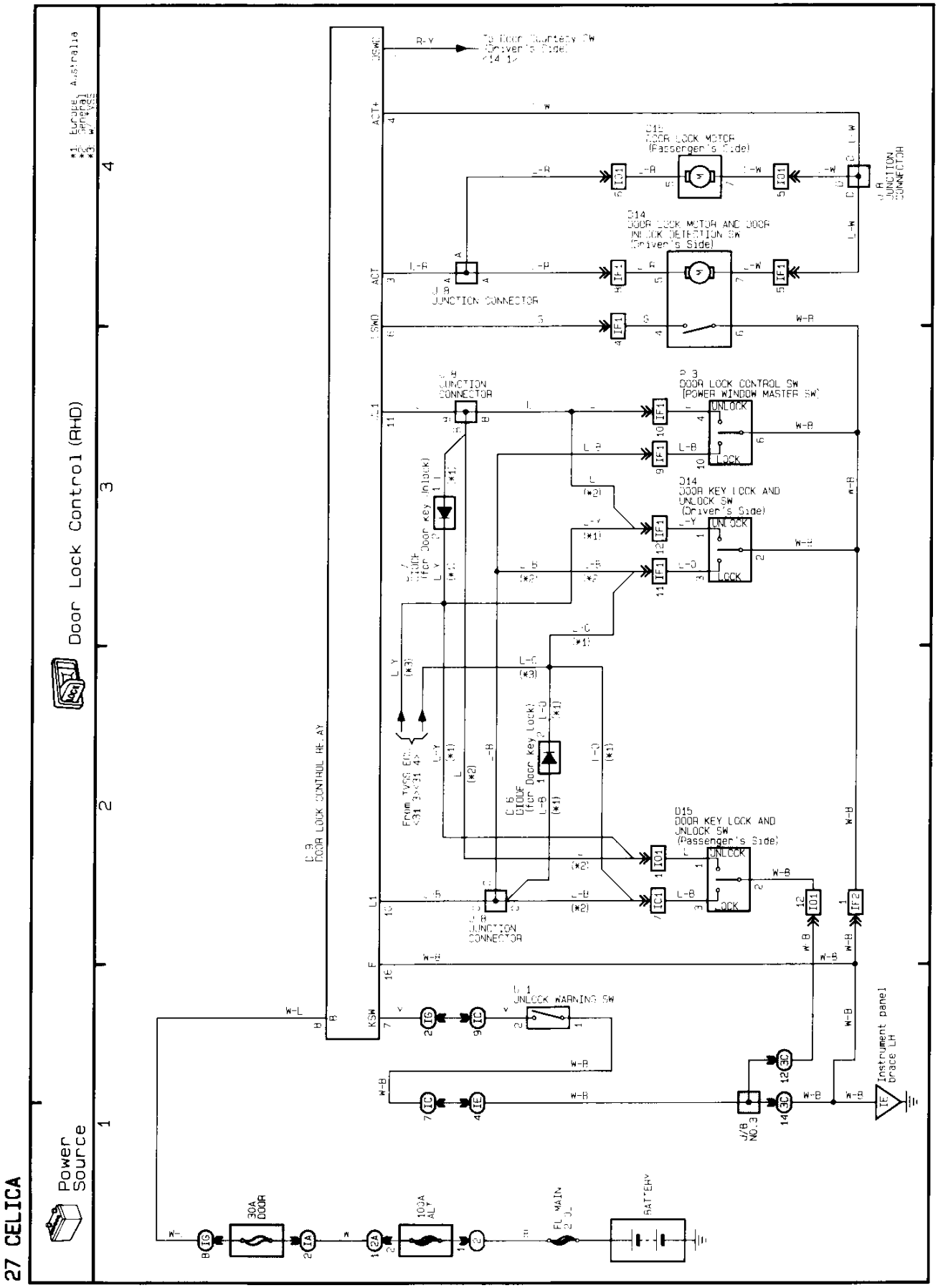

EWD

Downloaded from www.Manualslib.com manuals search engine

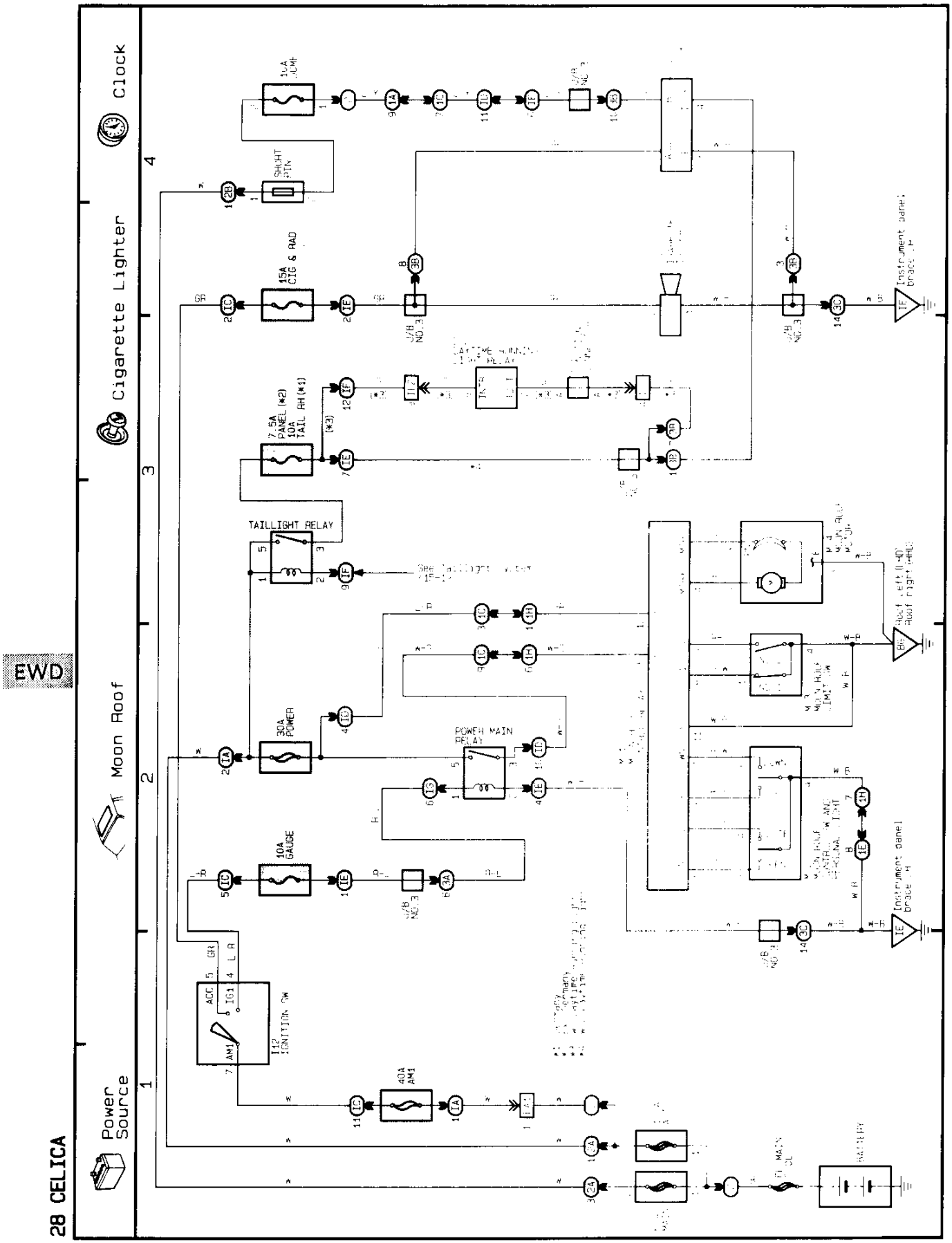

Downloaded from www.Manualslib.com manuals search engine

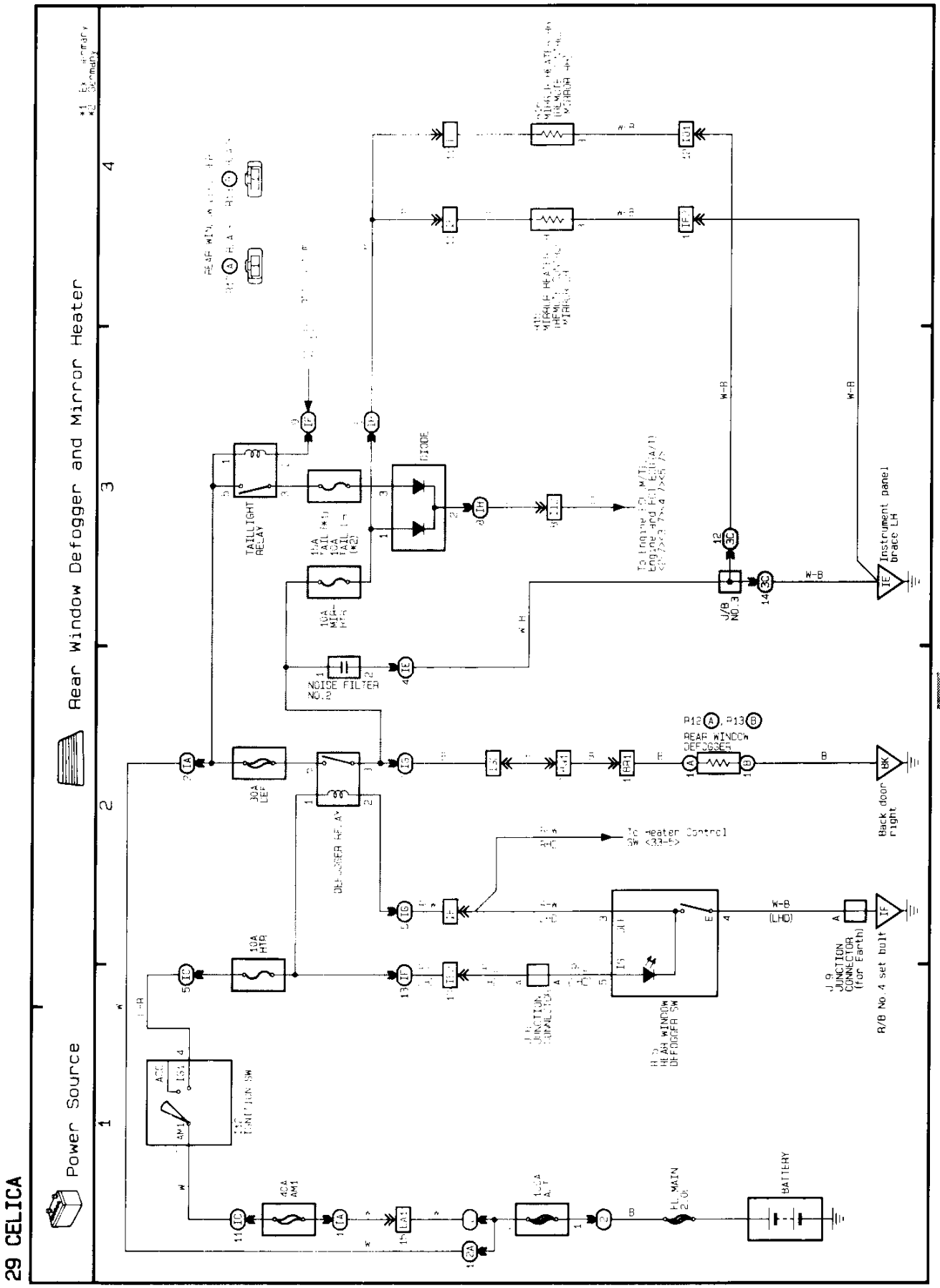

EWD

Downloaded from www.Manualslib.com manuals search engine

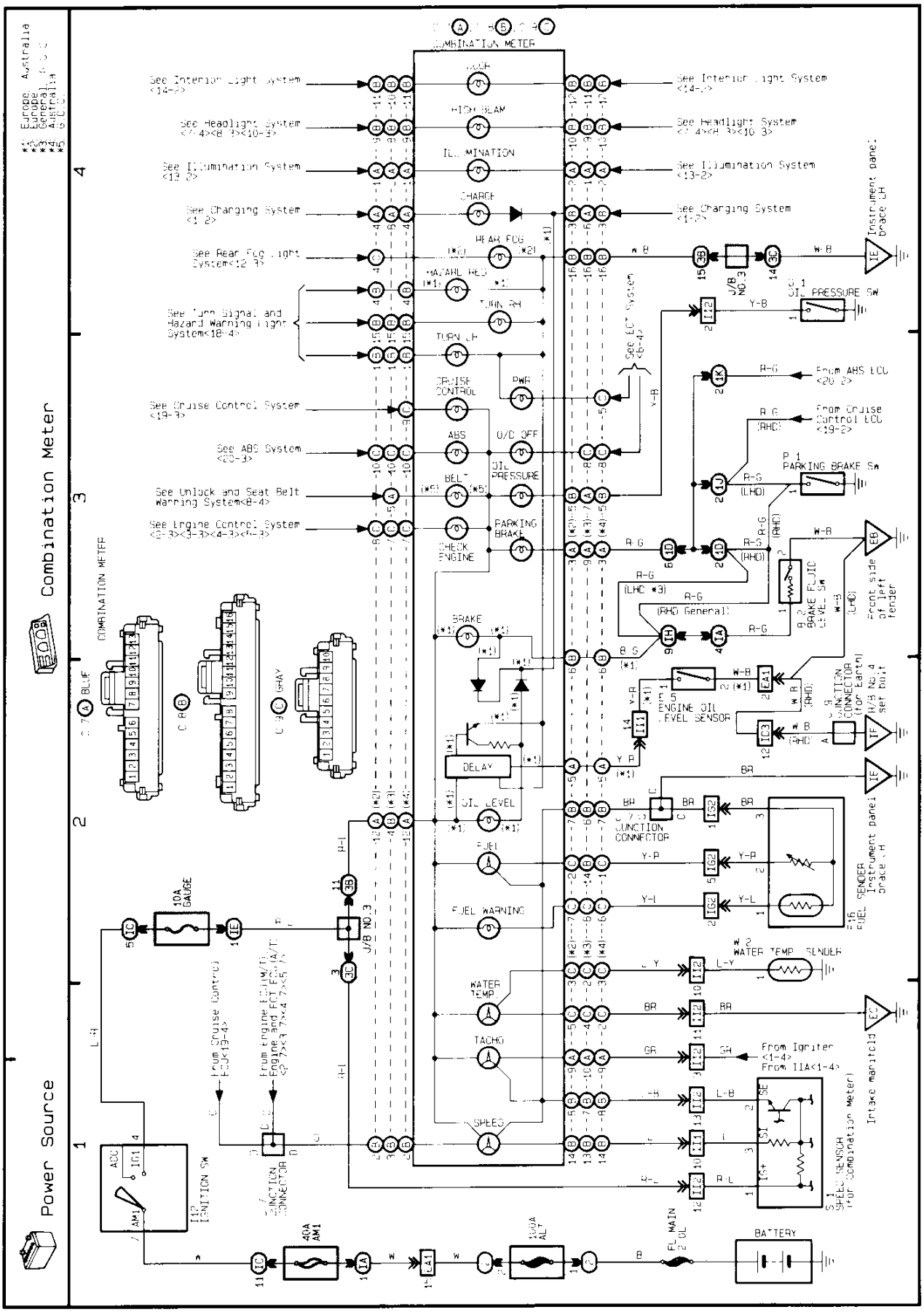

Downloaded from www.Manualslib.com manuals search engine

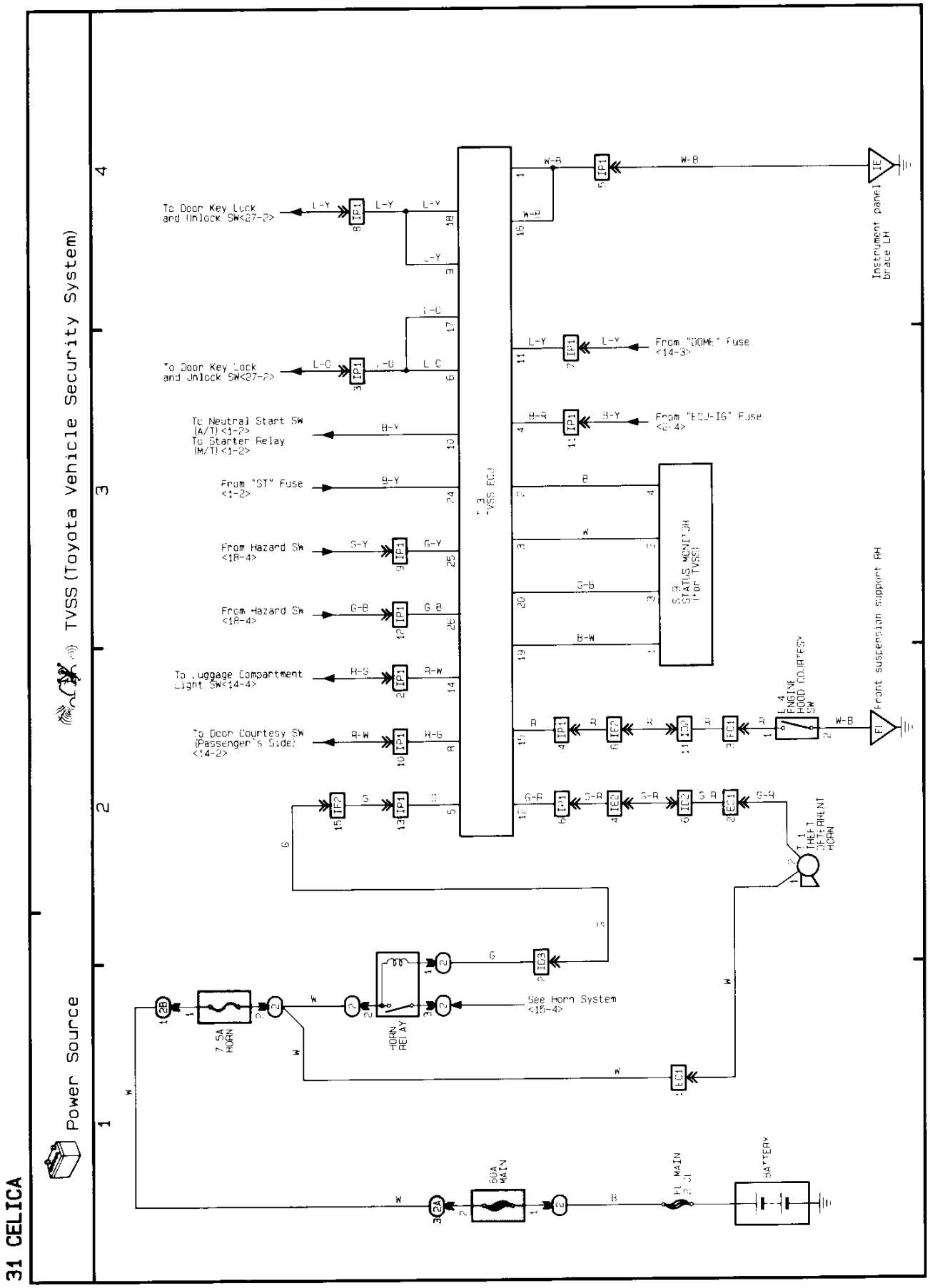

EWD

Downloaded from www.Manualslib.com manuals search engine

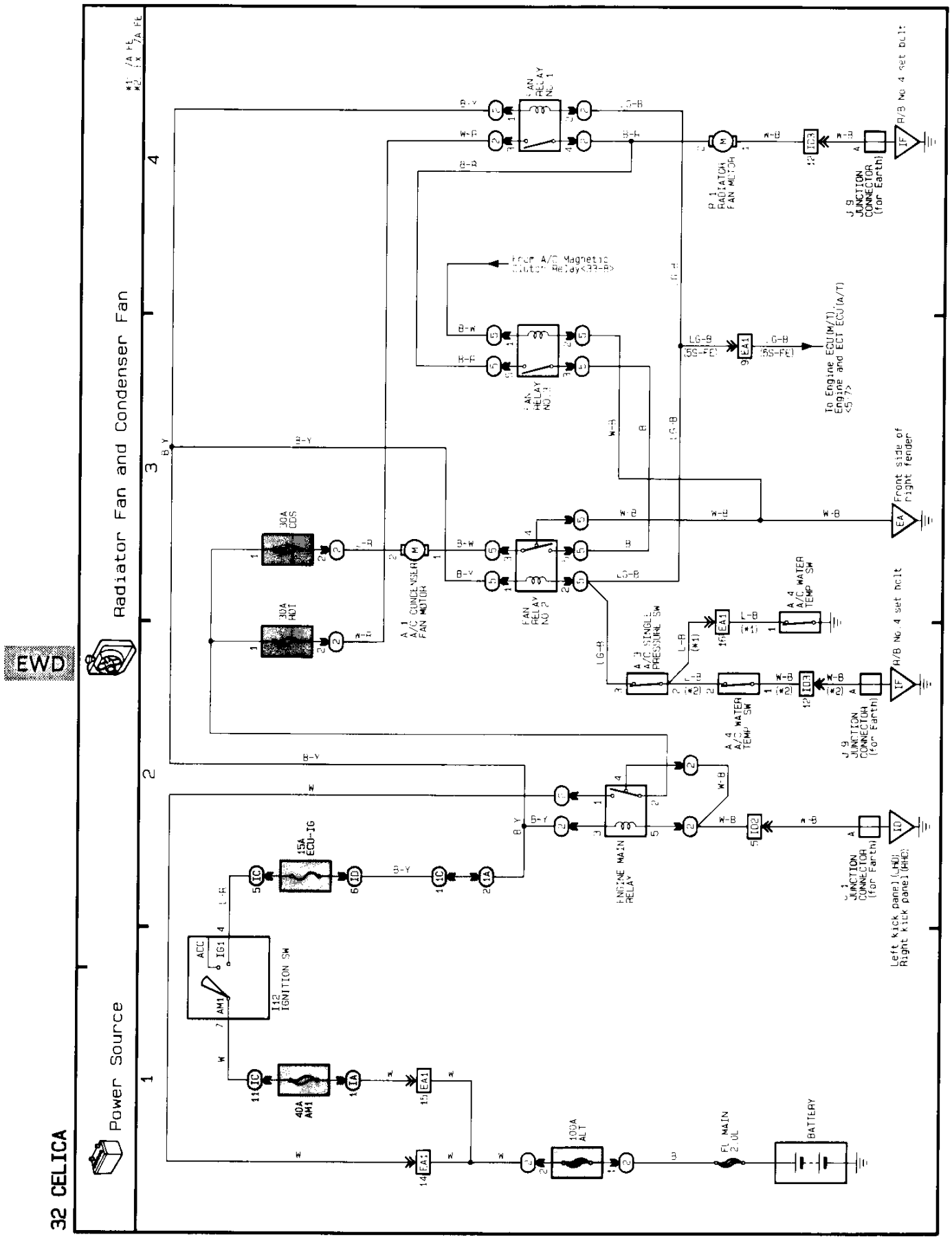

Downloaded from www.Manualslib.com manuals search engine

EWD

– MEMO –

Downloaded from www.Manualslib.com manuals search engine

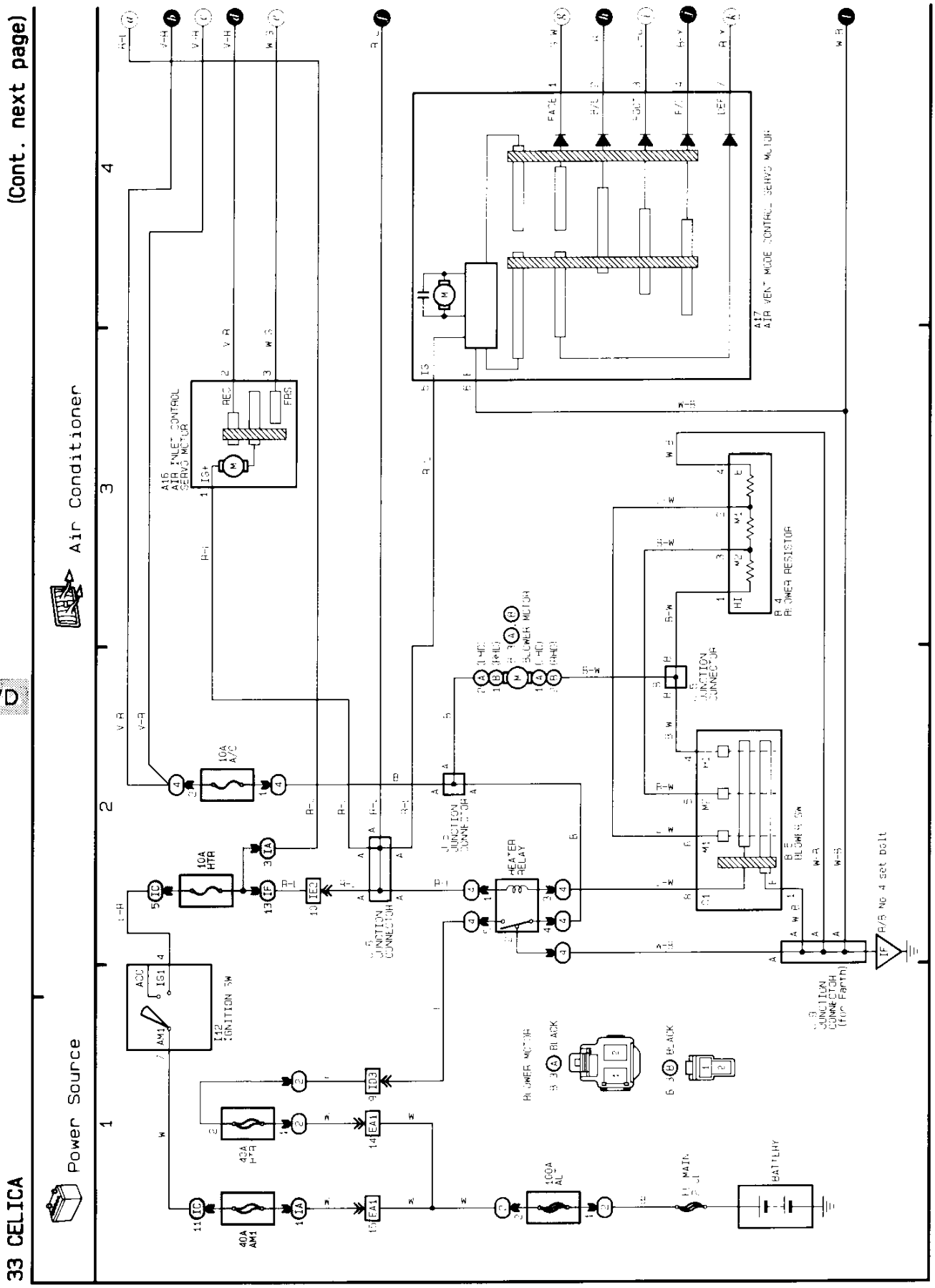

Downloaded from www.Manualslib.com manuals search engine

33 CELICA (Cont'd)

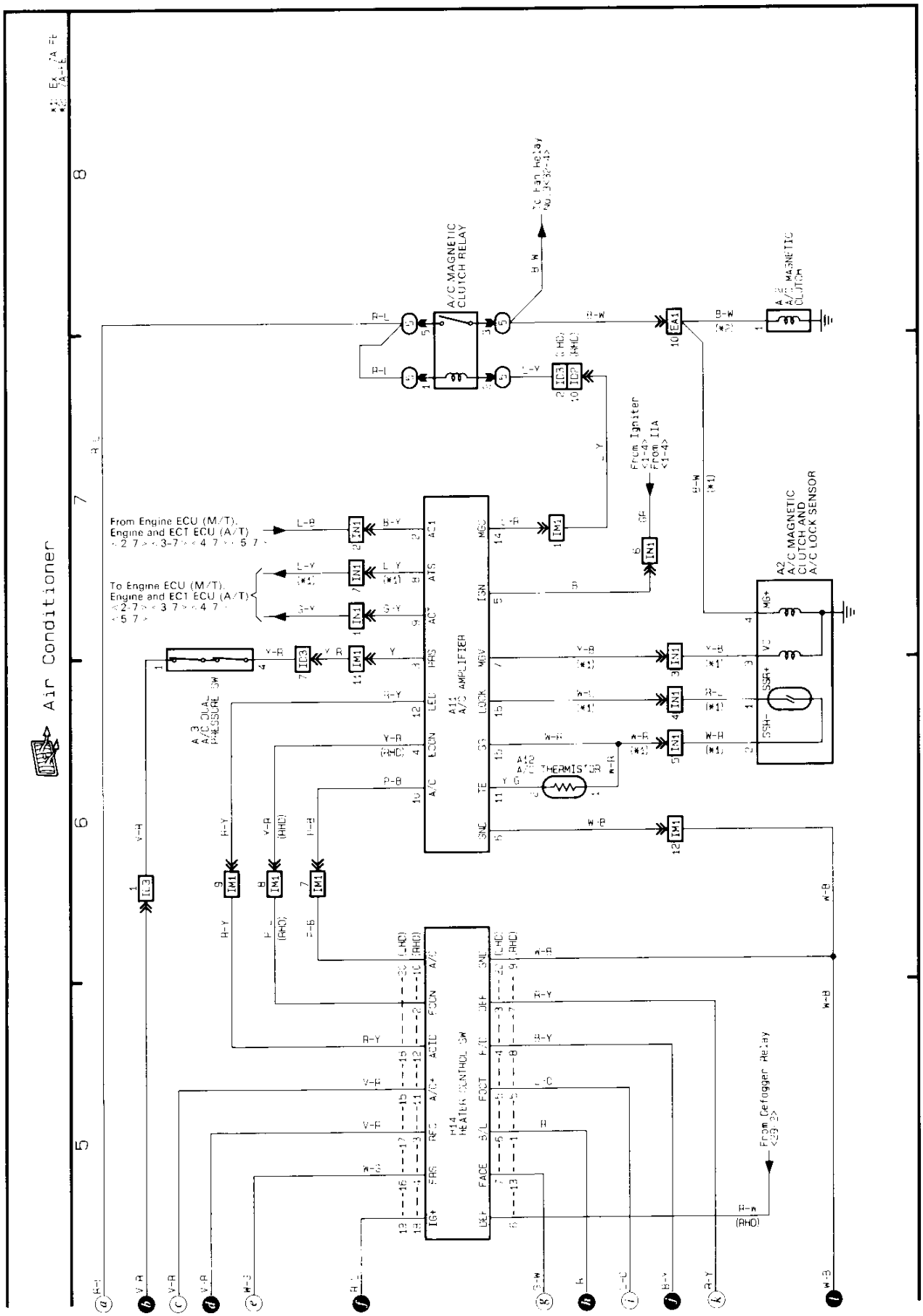

Downloaded from www.Manualslib.com manuals search engine

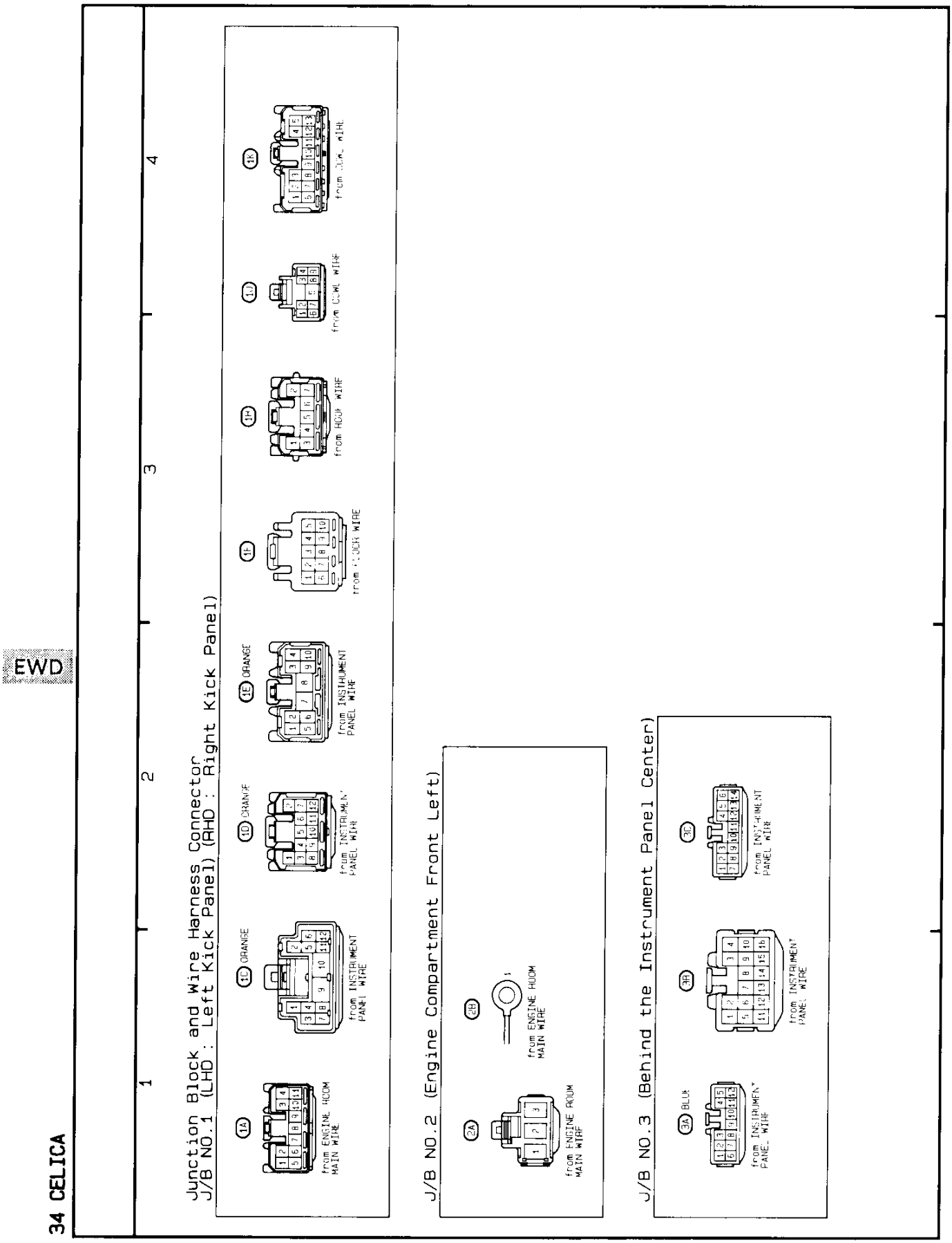

Downloaded from www.Manualslib.com manuals search engine

35 CELICA

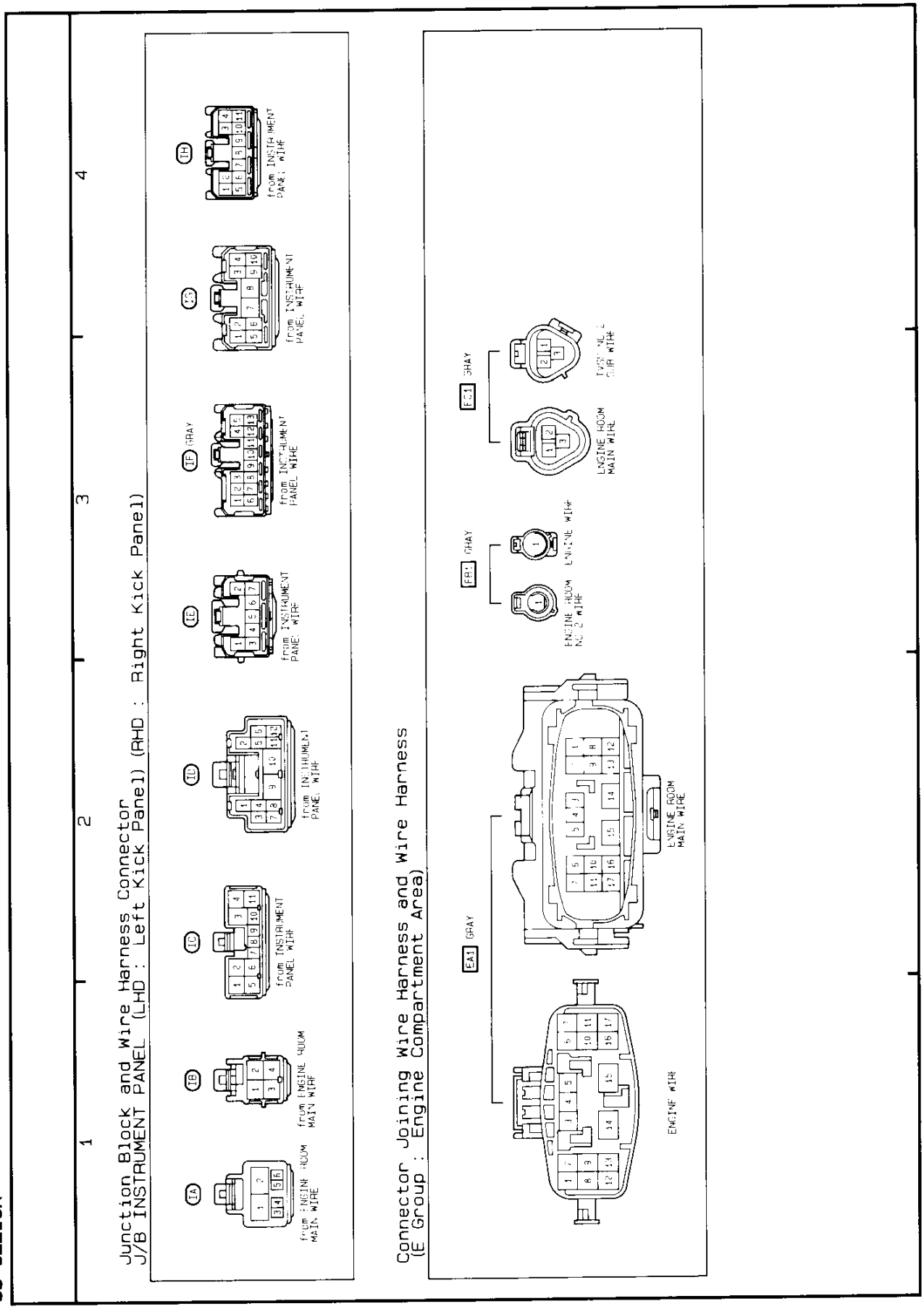

EWD

Downloaded from www.Manualslib.com manuals search engine

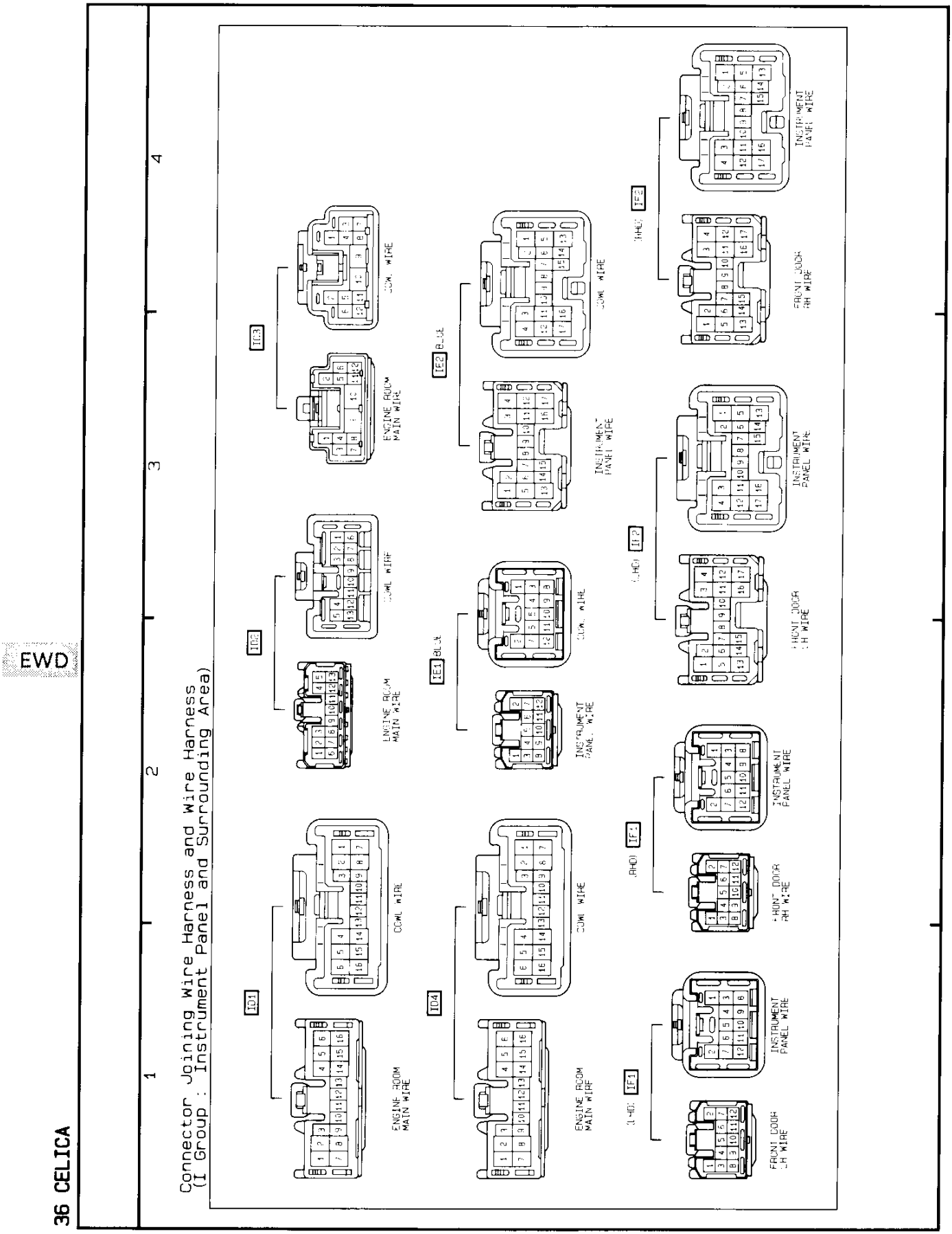

Downloaded from www.Manualslib.com manuals search engine

37 CELICA

Connector Joining Wire Harness and Wire Harness
(I Group : Instrument Panel and Surrounding Area) (Cont'd)

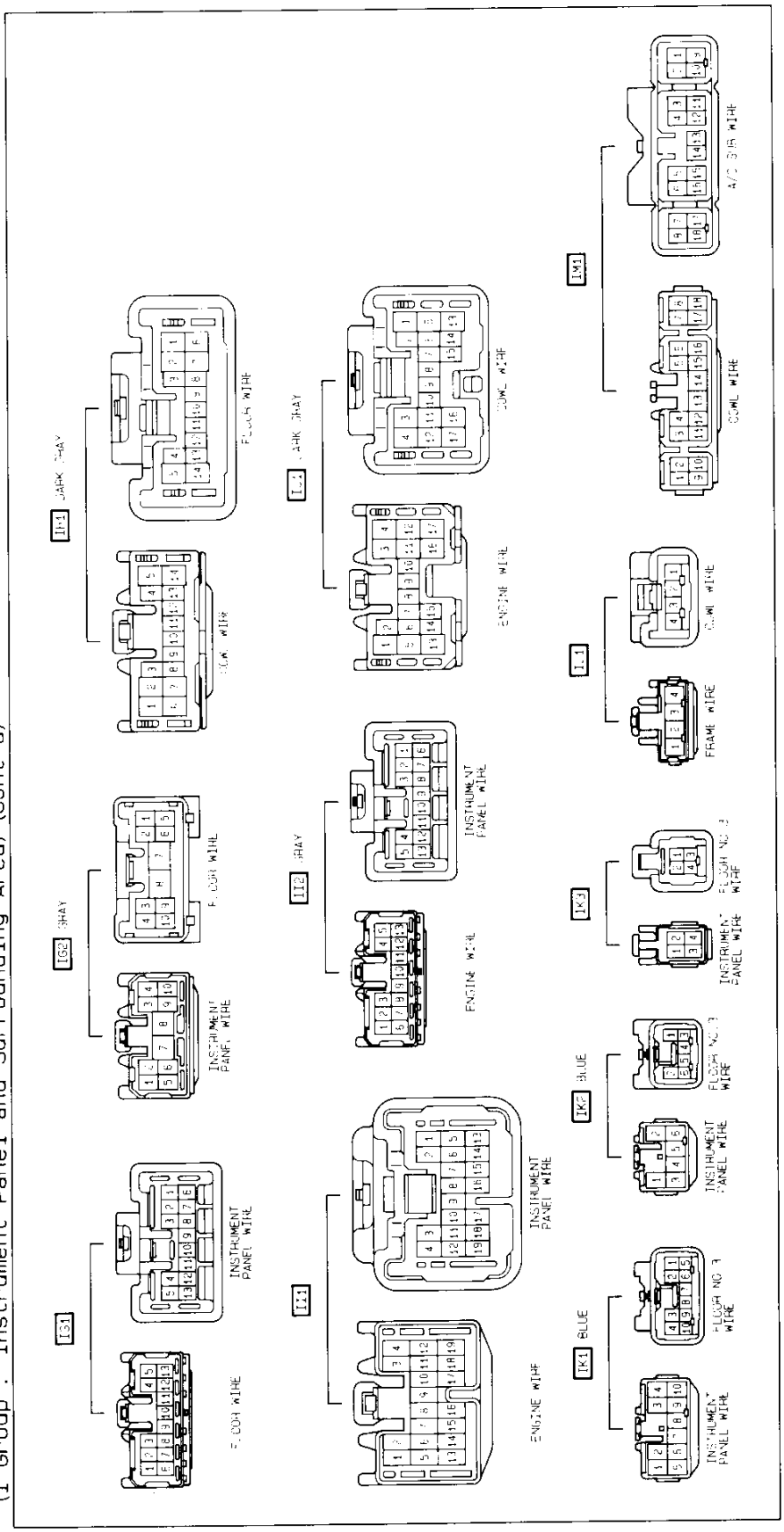

Downloaded from www.Manualslib.com manuals search engine

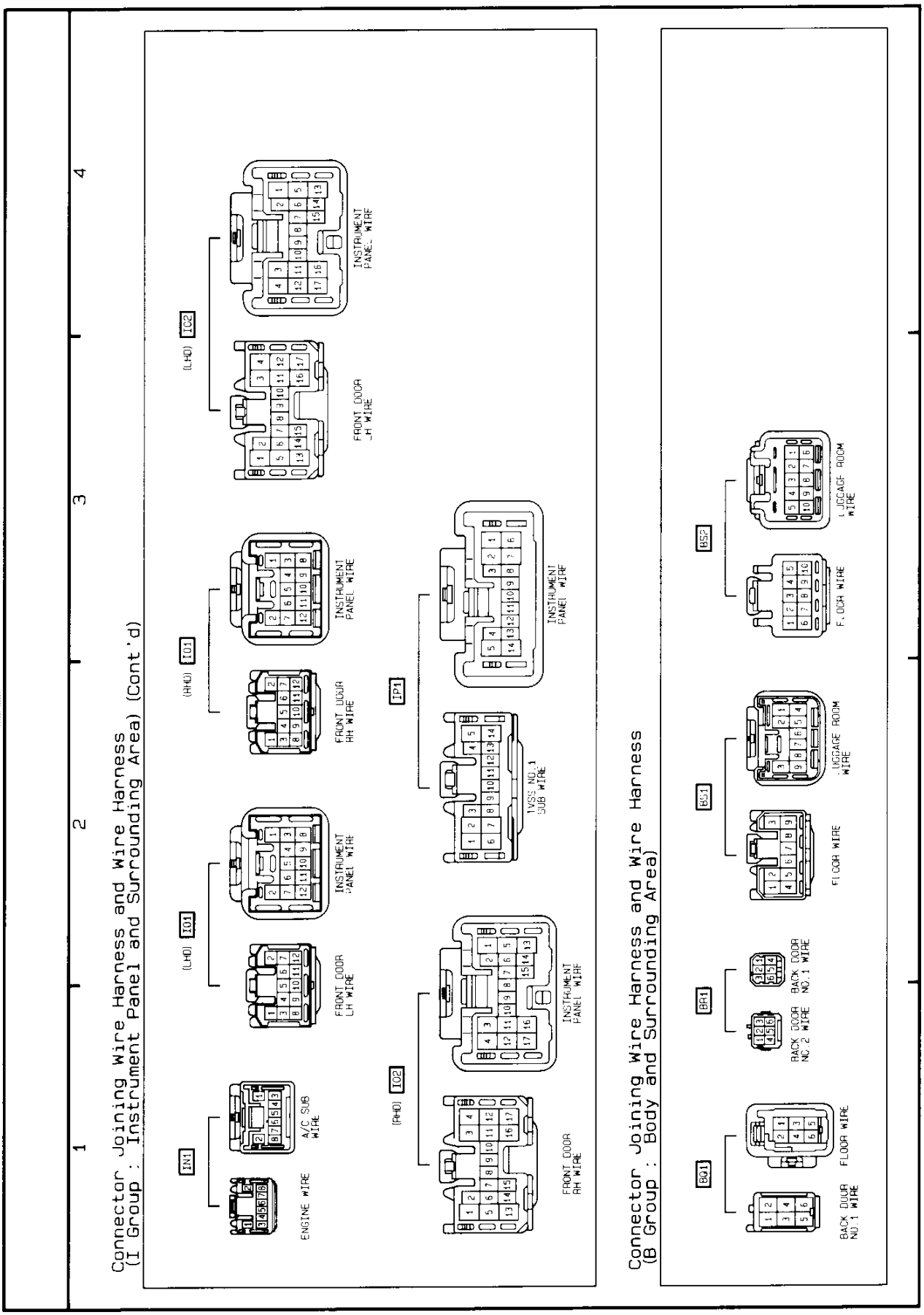

Downloaded from www.Manualslib.com manuals search engine

TOYOTA
QUALITY SERVICE

OVERSEAS SERVICE DIVISION
TOYOTA MOTOR CORPORATION

PRINTED IN JAPAN I
First Printing: Jan. 10, 1994 01-940110-00
First Revision Printed: Jul. 7, 1995 02-950707-01-2

Downloaded from www.Manualslib.com manuals search engine